BA01147C/07/EN/07.22-00
71570544
2022-04-30

Operating Instructions
Condumax CLS15D/16D/21D

For contacting conductivity measurement in liquids
Sensors with Memosens protocol

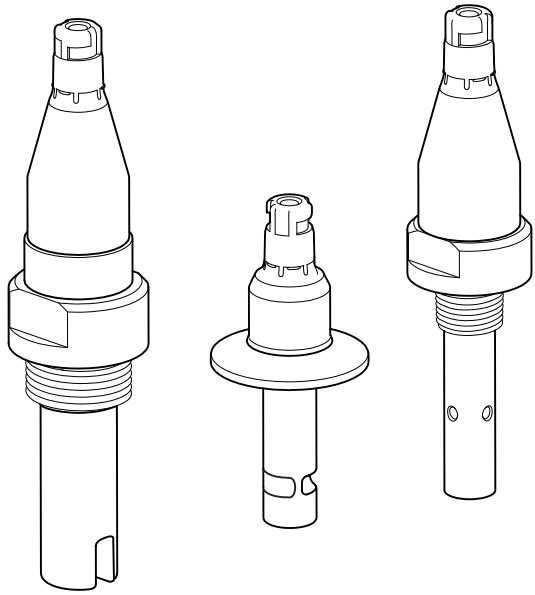

Endress+Hauser
People for Process Automation

Table of contents

1 About this document 3
1.1 Warnings 3
1.2 Symbols 3

2 Basic safety instructions 4
2.1 Requirements for the personnel 4
2.2 Intended use 4
2.3 Workplace safety 4
2.4 Operational safety 5
2.5 Product safety 5

3 Incoming acceptance and product identification 7
3.1 Incoming acceptance 7
3.2 Product identification 8
3.3 Scope of delivery 9

4 Mounting 9
4.1 Mounting requirements (only CLS16D) 9
4.2 Mounting the sensor 10
4.3 Post-mounting check 14

5 Electrical connection 14
5.1 Quick wiring guide 15
5.2 Connecting the sensor 16
5.3 Ensuring the degree of protection 17
5.4 Post-connection check 17

6 Commissioning 18

7 Maintenance 19

8 Repair 20
8.1 General notes 20
8.2 Spare parts 20
8.3 Endress+Hauser services (only CLS16D) 20
8.4 Return 21
8.5 Disposal 21

9 Technical data 22
9.1 Input 22
9.2 Performance characteristics 22
9.3 Environment 23
9.4 Process 24
9.5 Mechanical construction 26

1 About this document

1.1 Warnings

Structure of information	Meaning
DANGER **Causes (/consequences)** If necessary, Consequences of non-compliance (if applicable) ▶ Corrective action	This symbol alerts you to a dangerous situation. Failure to avoid the dangerous situation **will** result in a fatal or serious injury.
WARNING **Causes (/consequences)** If necessary, Consequences of non-compliance (if applicable) ▶ Corrective action	This symbol alerts you to a dangerous situation. Failure to avoid the dangerous situation **can** result in a fatal or serious injury.
CAUTION **Causes (/consequences)** If necessary, Consequences of non-compliance (if applicable) ▶ Corrective action	This symbol alerts you to a dangerous situation. Failure to avoid this situation can result in minor or more serious injuries.
NOTICE **Cause/situation** If necessary, Consequences of non-compliance (if applicable) ▶ Action/note	This symbol alerts you to situations which may result in damage to property.

1.2 Symbols

- Additional information, tips
- Permitted or recommended
- Not permitted or not recommended
- Reference to device documentation
- Reference to page
- Reference to graphic
- Result of a step

2 Basic safety instructions

2.1 Requirements for the personnel

- Installation, commissioning, operation and maintenance of the measuring system may be carried out only by specially trained technical personnel.
- The technical personnel must be authorized by the plant operator to carry out the specified activities.
- The electrical connection may be performed only by an electrical technician.
- The technical personnel must have read and understood these Operating Instructions and must follow the instructions contained therein.
- Faults at the measuring point may only be rectified by authorized and specially trained personnel.

Repairs not described in the Operating Instructions provided must be carried out only directly at the manufacturer's site or by the service organization.

2.2 Intended use

The conductivity sensors are designed for the conductive measurement of the conductivity of liquids.

They are used in the following fields:

Sensor	Applications	Hazardous areas
Condumax CLS15 D	Measurements in pure and ultrapure water	Approved for Ex zone 0
Condumax CLS16 D	Measurements in pure and ultrapure water with hygienic requirements	Approved for Ex zone 0
Condumax CLS21 D	Measurements in media with medium or high conductivity	Approved for Ex zone 0

Use of the device for any purpose other than that described, poses a threat to the safety of people and of the entire measuring system and is therefore not permitted.

The manufacturer is not liable for damage caused by improper or non-designated use.

2.3 Workplace safety

As the user, you are responsible for complying with the following safety conditions:
- Installation guidelines
- Local standards and regulations
- Regulations for explosion protection

Electromagnetic compatibility
- The product has been tested for electromagnetic compatibility in accordance with the applicable international standards for industrial applications.
- The electromagnetic compatibility indicated applies only to a product that has been connected in accordance with these Operating Instructions.

2.4 Operational safety

Before commissioning the entire measuring point:

1. Verify that all connections are correct.
2. Ensure that electrical cables and hose connections are undamaged.
3. Do not operate damaged products, and protect them against unintentional operation.
4. Label damaged products as defective.

During operation:

- If faults cannot be rectified:
  products must be taken out of service and protected against unintentional operation.

2.5 Product safety

2.5.1 State-of-the-art technology

The product is designed to meet state-of-the-art safety requirements, has been tested, and left the factory in a condition in which it is safe to operate. The relevant regulations and international standards have been observed.

2.5.2 Electrical equipment in hazardous areas

ATEX/NEPSI II 1G Ex ia IIC T3/T4/T6 Ga

- The Memosens inductive sensor-cable connection system is suitable for use in hazardous areas in accordance with EC type examination certificate BVS 04 ATEX E 121 X. The corresponding EC declaration of conformity is part of this document.
- The certified conductivity sensors CLS15D/CLS16D/CLS21D may only be connected via the measuring cable CYK10-G/I*** to the certified intrinsically safe digital sensor output circuits of measuring device Liquiline M CM42-KE/F/G/I/J********** in accordance with EC type-examination certificate TÜV 13 ATEX 7459 X.
- The electrical connection must be made according to the wiring diagram of the transmitter.
- Metallic process connection parts must be mounted at the mounting location electrostatically conductive (< 1 MΩ).
- The CLS15D-type sensors with non-metal process connections and the CLS21D-type sensors may only be employed for measurement in liquids with a minimum conductivity of 10 nS/cm.
- The CLS15D-type sensors with non-metal process connections may not be operated under process conditions in which electrostatic charging of the sensor, and particularly of the electrically insulated outer electrode, is likely to occur.
- Measuring cable CYK10-G/I*** and its terminal head must be protected against electrostatic charging if it is run through Zone 0.
- The maximum permitted cable length is 100 m.
- Ex versions of digital sensors with Memosens technology are indicated by an orange-red ring.
- Full compliance with regulations for electrical systems in hazardous areas (e.g. EN/IEC 60079-14) is mandatory when using the devices and sensors.

Temperature classes

Name	Type					Medium temp. T_a for temperature class (Tn)	Cat.
Condumax	CLS15D	-	A	**	G	-20 °C ≤ Ta ≤ +135 °C (T3) -20 °C ≤ Ta ≤ +120 °C (T4) -20 °C ≤ Ta ≤ +70 °C (T6)	II 1G
Condumax	CLS15D	-	B/L	**	G	-20 °C ≤ Ta ≤ +135 °C (T3) -20 °C ≤ Ta ≤ +100 °C (T4) -20 °C ≤ Ta ≤ +50 °C (T6)	II 1G
Condumax	CLS16D	-	**	**	G	-5 °C ≤ Ta ≤ +135 °C (T3) -5 °C ≤ Ta ≤ +115 °C (T4) -5 °C ≤ Ta ≤ +65 °C (T6)	II 1G
Condumax	CLS21D	-	*	**	G	-20 °C ≤ Ta ≤ +135 °C (T3) -20 °C ≤ Ta ≤ +115 °C (T4) -20 °C ≤ Ta ≤ +65 °C (T6)	II 1G

If the specified medium temperatures are complied with, temperatures that are not permitted for the respective temperature class will not occur on the equipment.

ATEX/NEPSI II 3G Ex ic IIC T3/T4/T6 Gc

- The Memosens inductive sensor-cable connection system is suitable for use in hazardous areas, Zone 2. The corresponding EU declaration of conformity is part of this document.
- The certified conductivity sensors CLS15D / CLS16D / CLS21D may only be connected via the measuring cable CYK10-V*** to the certified intrinsically safe digital sensor output circuits of measuring device Liquiline M CM42-KV*********.
- The electrical connection must be made according to the wiring diagram of the transmitter.
- Metallic process connection parts must be mounted at the mounting location electrostatically conductive (< 1 MΩ).
- The CLS15D-type sensors with non-metal process connections and the CLS21D-type sensors may only be employed for measurement in liquids with a minimum conductivity of 10 nS/cm.
- The CLS15D-type sensors with non-metal process connections may not be operated under process conditions in which electrostatic charging of the sensor, particularly of the electrically insulated outer electrode, is likely to occur.
- The maximum permitted cable length is 100 m.
- Full compliance with regulations for electrical systems in hazardous areas (EN/IEC 60079-14) is mandatory when using the devices and sensors.

Temperature classes

Name	Type					Medium temp. T_a for temperature class (Tn)	Cat.
Condumax	CLS15D	-	A	**	V	-20 °C ≤ Ta ≤ +135 °C (T3) -20 °C ≤ Ta ≤ +120 °C (T4) -20 °C ≤ Ta ≤ +70 °C (T6)	II 3G
Condumax	CLS15D	-	B/L	**	V	-20 °C ≤ Ta ≤ +135 °C (T3) -20 °C ≤ Ta ≤ +100 °C (T4) -20 °C ≤ Ta ≤ +50 °C (T6)	II 3G

Name	Type					Medium temp. T_a for temperature class (Tn)	Cat.
Condumax	CLS16D	-	**	**	V	-5 °C ≤ Ta ≤ +135 °C (T3) -5 °C ≤ Ta ≤ +115 °C (T4) -5 °C ≤ Ta ≤ +65 °C (T6)	II 3G
Condumax	CLS21D	-	*	**	V	-20 °C ≤ Ta ≤ +135 °C (T3) -20 °C ≤ Ta ≤ +115 °C (T4) -20 °C ≤ Ta ≤ +65 °C (T6)	II 3G

If the specified medium temperatures are complied with, temperatures that are not permitted for the respective temperature class will not occur on the equipment.

FM/CSA IS/NI Cl.1 Div.1&2 Gr. A-D

► Pay attention to the documentation and control drawings for the transmitter.

3 Incoming acceptance and product identification

3.1 Incoming acceptance

1. Verify that the packaging is undamaged.
   ↳ Notify the supplier of any damage to the packaging.
   Keep the damaged packaging until the issue has been resolved.
2. Verify that the contents are undamaged.
   ↳ Notify the supplier of any damage to the delivery contents.
   Keep the damaged goods until the issue has been resolved.
3. Check that the delivery is complete and nothing is missing.
   ↳ Compare the shipping documents with your order.
4. Pack the product for storage and transportation in such a way that it is protected against impact and moisture.
   ↳ The original packaging offers the best protection.
   Make sure to comply with the permitted ambient conditions.

If you have any questions, please contact your supplier or your local Sales Center.

3.2 Product identification

3.2.1 Type code for versions with explosion protection

Name	Type		Version		
Condumax	CLS15D CLS16D CLS21D	- - -	* ** *	** ** **	G G G
			Process connections, materials not Ex-relevant		For use in hazardous areas, ATEX/NEPSI II 1G Ex ia IIC T3/T4/T6 Ga, IECEx Ex ia IIC T3/T4/T6 Ga

Name	Type		Version		
Condumax	CLS15D CLS16D CLS21D	- - -	* ** *	** ** **	O O O
			Process connections, materials not Ex-relevant		For use in hazardous areas, FM/CSA IS/NI Cl I Div.1&2 Gr. A-D

Name	Type		Version		
Condumax	CLS15D CLS16D CLS21D	- - -	* ** *	** ** **	V V V
			Process connections, materials not Ex-relevant		For use in hazardous areas, ATEX/NEPSI II 3G Ex ic IIC T3/T4/T6 Gc

3.2.2 Nameplate

The nameplate provides you with the following information on your device:
- Manufacturer identification
- Extended order code
- Serial number
- Safety information and warnings

► Compare the information on the nameplate with the order.

3.2.3 Product identification

Product page

www.endress.com/cls15d

www.endress.com/cls16d

www.endress.com/cls21d

Interpreting the order code

The order code and serial number of your product can be found in the following locations:
- On the nameplate
- In the delivery papers

Obtaining information on the product

1. Go to www.endress.com.
2. Page search (magnifying glass symbol): Enter valid serial number.
3. Search (magnifying glass).
   ↳ The product structure is displayed in a popup window.
4. Click the product overview.
   ↳ A new window opens. Here you fill information pertaining to your device, including the product documentation.

Manufacturer address

Endress+Hauser Conducta GmbH+Co. KG
Dieselstraße 24
D-70839 Gerlingen

3.3 Scope of delivery

The scope of delivery includes:
- Sensor in the version ordered
- Operating Instructions

4 Mounting

4.1 Mounting requirements (only CLS16D)

- Easily cleanable installation of equipment according to the criteria of the EHEDG must be free of dead legs.
- If a dead leg is unavoidable, it shall be kept as short as possible. Under no circumstances shall the length of a dead leg L exceed the pipe's inner diameter D minus the equipment's enveloping diameter d. The condition $L \leq D - d$ applies.
- Furthermore, the dead leg must be self-draining, so neither product nor process fluids are retained therein.
- Within tank installations, the cleaning device must be located so that it directly flushes the dead leg.
- For further reference, see the recommendations concerning hygienic seals and installations in EHEDG Doc. 10 and the Position Paper: "Easy cleanable Pipe couplings and Process connections".

4.2 Mounting the sensor

4.2.1 CLS15D

The sensors are installed directly via the process connection thread NPT ½" or ¾" or Clamp 1 ½". As an option, the sensor can also be installed using a commercially available T-piece or cross fitting or using a flow assembly.

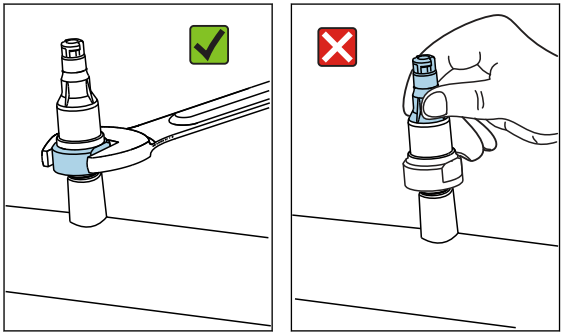

NOTICE

Incorrect mounting or disassembly

The Memosens head could become loose and fall off, resulting in total sensor failure!

- ▶ Only mount the sensor via the process connection.
- ▶ To do so, use a suitable tool, such as an open-ended wrench.

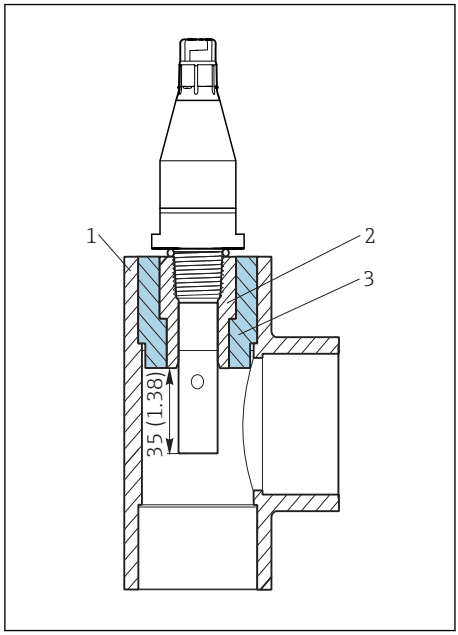

1 With NPT ½" thread in T-piece or cross fitting. Unit of measurement mm (in)

1 T-piece or cross fitting (DN 32, 40 or 50)
2 Glue-in VC threaded coupling (NPT ½" for DN 20)
3 Glue-in adapter coupling (for DN 32, 40, 50)

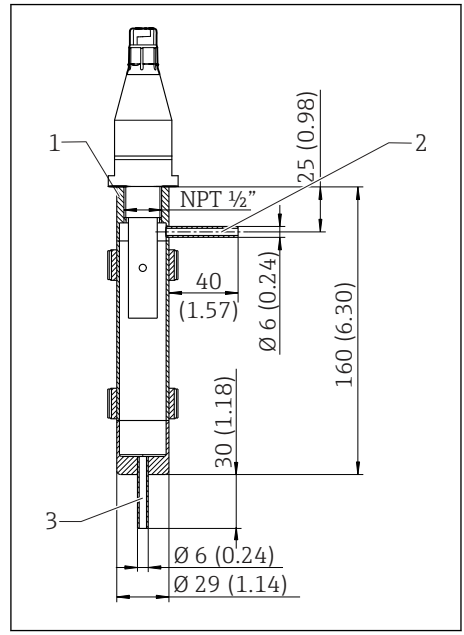

2 With thread NPT ½" in flow assembly CYA21. Unit of measurement mm (in)

1 Sensor holder NPT ½"
2 Inlet
3 Outlet

1. Ensure that the electrodes are fully immersed in the medium during measurement. Immersion depth: at least 35 mm (1.38").
2. If using the sensor in the ultrapure water range, you must work under air-evacuated conditions.
   ↳ Otherwise the CO_2 in the air can dissolve in the water and its (weak) dissociation can increase the conductivity by up to 3 µS/cm.

4.2.2 CLS16D

The sensors are installed directly via the process connection.

▶ When installing in pipes, pay attention to the flow direction.

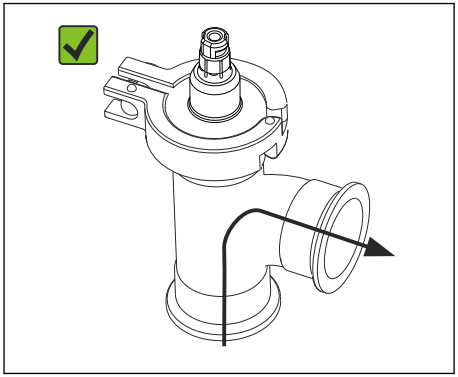

A0019016

3 *Permitted flow direction*

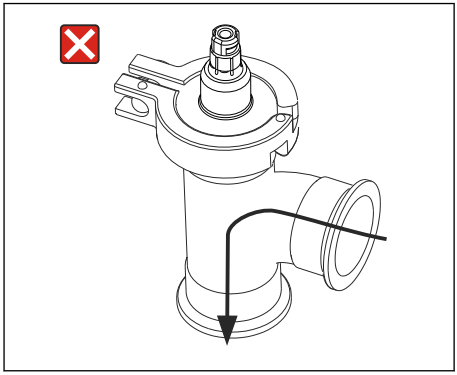

A0019017

4 *Inadmissible flow direction*

1. Ensure that the electrodes are fully immersed in the medium during measurement.
2. If using the sensor in the ultrapure water range, you must work under air-evacuated conditions.
   ↳ Otherwise, the CO_2 in the air can dissolve in the water and its (weak) dissociation can increase the conductivity by up to 3 µS/cm.

4.2.3 CLS21D

Clamp connection
Both sheet-metal brackets and solid brackets can be used to secure the sensor. Sheet-metal brackets have a lower dimensional stability, uneven bearing surfaces causing point loads, and sometimes sharp edges that can damage the clamp. We recommend you only use solid brackets due to their higher dimensional stability. Solid brackets can be used over the entire pressure/temperature range (see pressure-temperature ratings).

The sensors are installed directly via the process connection. As an option, the sensor can also be installed via a flow assembly.

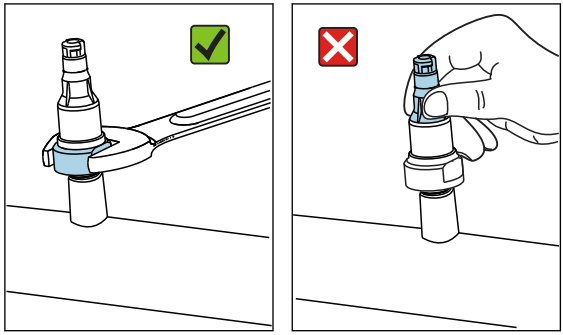

NOTICE

Incorrect mounting or disassembly

The Memosens head could become loose and fall off, resulting in total sensor failure!

- ▶ Only mount the sensor via the process connection.
- ▶ To do so, use a suitable tool, such as an open-ended wrench.

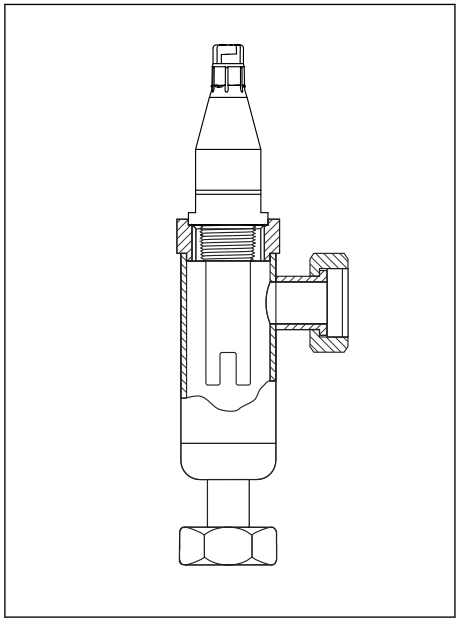

5 *Installation in flow assembly CLA751*

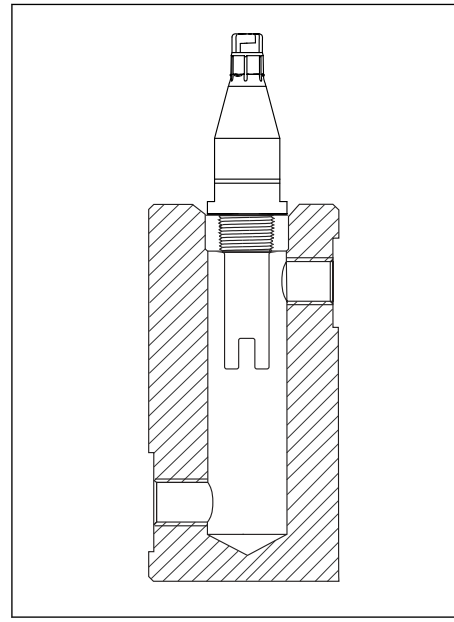

6 *Installation in flow assembly CLA752*

The Dipfit CLA111 immersion assembly is available for installing sensors with G1 thread in vessels.

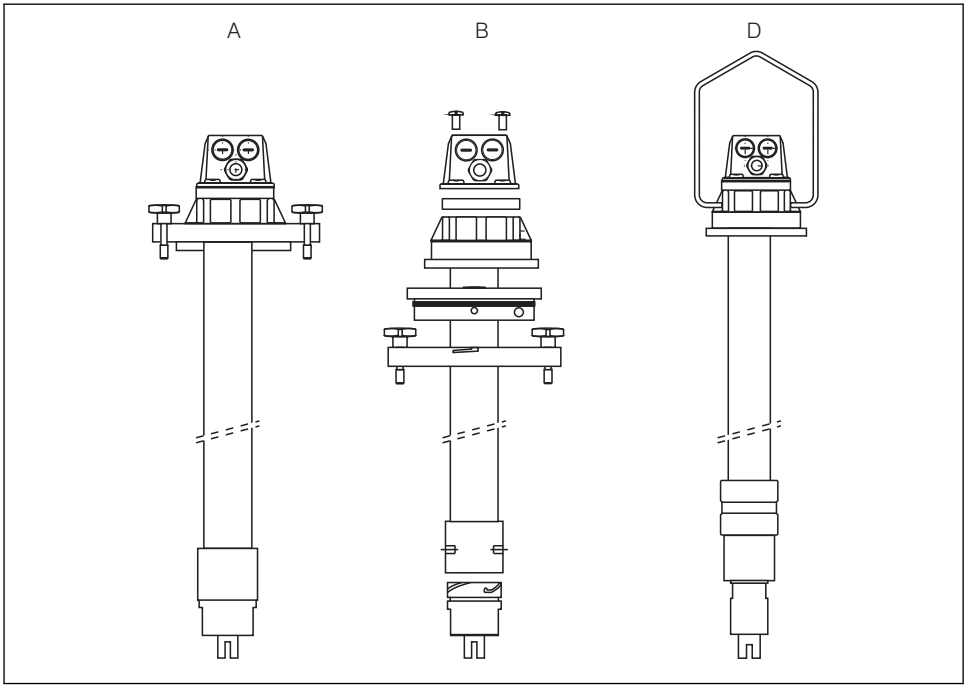

7 *Installation in Dipfit CLA111 immersion assembly, fastening versions A, B and D*

Ensure that the electrodes are fully immersed in the medium during measurement.

4.3 Post-mounting check

1. Are the sensor and cable undamaged?
2. Is the sensor installed in the process connection and is not suspended from the cable?

5 Electrical connection

WARNING

Device is live!

Incorrect connection may result in injury or death!

- The electrical connection may be performed only by an electrical technician.
- The electrical technician must have read and understood these Operating Instructions and must follow the instructions contained therein.
- **Prior** to commencing connection work, ensure that no voltage is present on any cable.

5.1 Quick wiring guide

5.1.1 Sensors for zone 0

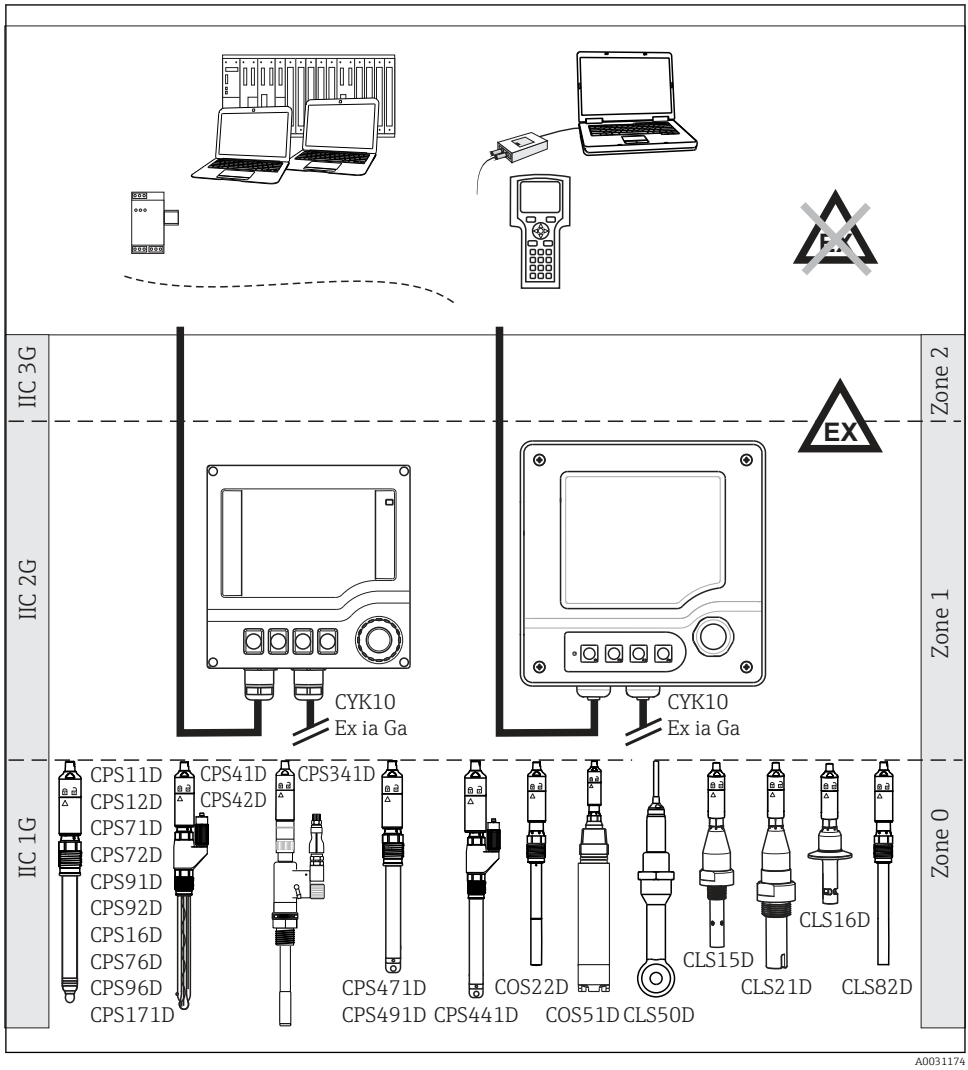

8 Electrical connection in hazardous environment

5.1.2 Sensors for zone 2

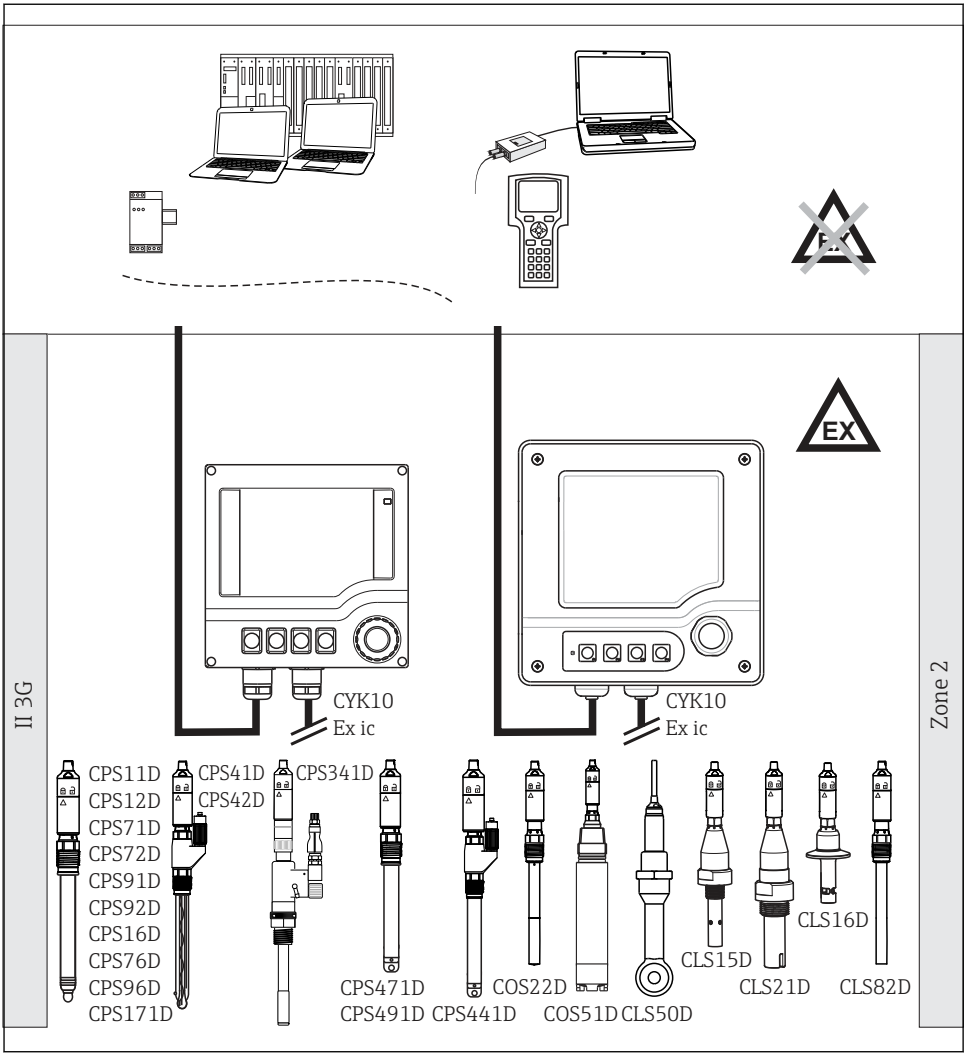

9 Electrical connection in hazardous environment

5.2 Connecting the sensor

The sensor is connected to the transmitter via the Memosens data cable CYK10.

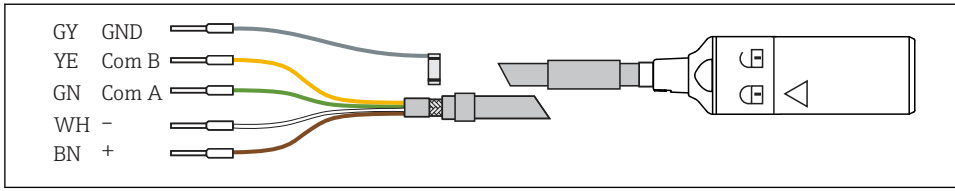

10 Memosens data cable CYK10

NOTICE

Mechanical twist protection for CLS15D and CLS21D

If too much force is applied to the Memosens head, this can shear the connections and therefore destroy the sensor!

- ▶ There is no need to exert excessive force when connecting the sensor to the cable coupling. Proceed with care!
- ▶ If the Memosens coupling clearly will not close, check the coupling for dirt or mechanical damage, and make sure that you are turning it in the right direction. Pay attention to the lock symbol on the coupling!
- ▶ If necessary, use a different Memosens cable.

5.3 Ensuring the degree of protection

Only the mechanical and electrical connections which are described in these instructions and which are necessary for the required, designated use, may be carried out on the device delivered.

- ▶ Exercise care when carrying out the work.

Otherwise, the individual types of protection (Ingress Protection (IP), electrical safety, EMC interference immunity) agreed for this product can no longer be guaranteed due, for example to covers being left off or cable (ends) that are loose or insufficiently secured.

5.4 Post-connection check

Device health and specifications	Action
Is the outside of the sensor, assembly or cable free from damage?	▶ Perform a visual inspection.
Electrical connection	**Action**
Are the mounted cables strain-relieved and not twisted?	▶ Perform a visual inspection. ▶ Untwist the cables.
Is a sufficient length of the cable cores stripped, and are the cores positioned in the terminal correctly?	▶ Perform a visual inspection. ▶ Pull gently to check they are seated correctly.
Are all screw terminals tightened?	▶ Tighten the screw terminals.

Device health and specifications	Action
Are all cable entries mounted, firmly tightened and leak-tight?	▶ Perform a visual inspection. In the case of lateral cable entries: ▶ Point cable loops downward so that water can drip off.
Are all cable entries mounted on the side or pointing downwards?	

6 Commissioning

Prior to initial commissioning, ensure that:
- The sensor is correctly installed
- The electrical connection is correct

1. Check the temperature compensation and damping settings on the transmitter.

Operating Instructions of the transmitter being used, e.g. BA01245C if using Liquiline CM44x or CM44xR.

WARNING

Escaping process medium

Risk of injury from high pressure, high temperatures or chemical hazards!
- ▶ Before applying pressure to an assembly with cleaning system, ensure that the system has been connected correctly.
- ▶ If you cannot reliably establish the correct connection, do not install the assembly in the process.

If using an assembly with automatic cleaning function:

2. Check that the cleaning medium (water or air, for example) is connected correctly.
3. Following commissioning:
   Maintain the sensor at regular intervals.
   ↳ This is the only way to ensure reliable measurements.

Only CLS15D:

As the sensor can be operated with a nominal pressure greater than 1 bar (15 psi), it has been registered according to CSA B51 ("Boiler, pressure vessel, and pressure piping code"; category F) with a CRN (Canadian Registration Number) in all Canadian provinces.

The CRN is located on the nameplate.

7 Maintenance

⚠ CAUTION

Corrosive chemicals

Risk of chemical burns to the eyes and skin and risk of damage to clothing and equipment!

- ▶ It is absolutely essential to protect the eyes and hands properly when working with acids, alkalis and organic solvents!
- ▶ Wear protective goggles and safety gloves.
- ▶ Clean away splashes on clothes and other objects to prevent any damage.
- ▶ Comply with instructions in the safety data sheets for the chemicals used.

⚠ WARNING

Thiocarbamide

Harmful if swallowed! Limited evidence of carcinogenicity! Possible risk of harm to the unborn child! Dangerous for the environment with long-term effects!

- ▶ Wear protective goggles, protective gloves and appropriate protective clothing.
- ▶ Avoid all contact with the eyes, mouth and skin.
- ▶ Avoid discharge into the environment.

⚠ CAUTION

Corrosive chemicals

Risk of chemical burns to the eyes and skin and risk of damage to clothing and equipment!

- ▶ It is absolutely essential to protect the eyes and hands properly when working with acids, alkalis and organic solvents!
- ▶ Wear protective goggles and safety gloves.
- ▶ Clean away splashes on clothes and other objects to prevent any damage.
- ▶ Comply with instructions in the safety data sheets for the chemicals used.

Clean away fouling on the sensor as follows depending on the type of fouling:

1. Oily and greasy films:
   Clean with a grease remover, e.g. alcohol, or hot water and a surfactant-containing (basic) agent (e.g. washing-up liquid).
2. Lime and metal hydroxide buildup and low solubility (lyophobic) organic buildup:
   Dissolve buildup with diluted hydrochloric acid (3 %) and then rinse thoroughly with plenty of clear water.
3. Sulfidic buildup (from flue gas desulfurization or wastewater treatment plants):
   Use a mixture of hydrochloric acid (3 %) and thiocarbamide (commercially available) and then rinse thoroughly with plenty of clear water.
4. Buildup containing protein (e.g. in the food industry):
   Use a mixture of hydrochloric acid (0.5 %) and pepsin (commercially available) and then rinse thoroughly with plenty of clear water.
5. Readily soluble biological buildup:
   Rinse with pressurized water.

After cleaning, rinse the sensor thoroughly with plenty of water.

8 Repair

8.1 General notes

The repair and conversion concept provides for the following:
- The product has a modular design
- Spare parts are grouped into kits which include the associated kit instructions
- Only use original spare parts from the manufacturer
- Repairs are carried out by the manufacturer's Service Department or by trained users
- Certified devices can only be converted to other certified device versions by the manufacturer's Service Department or at the factory
- Observe applicable standards, national regulations, Ex documentation (XA) and certificates

1. Carry out the repair according to the kit instructions.
2. Document the repair and conversion and enter, or have entered, in the Life Cycle Management tool (W@M).

8.2 Spare parts

Device spare parts that are currently available for delivery can be found on the website:

www.endress.com/device-viewer

► Quote the serial number of the device when ordering spare parts.

8.3 Endress+Hauser services (only CLS16D)

Intact seals are a prerequisite for safe and reliable measurements. The seal should be replaced at regular intervals to guarantee maximum sensor operational safety and hygiene.

Practical repair intervals can only be determined by the user as they depend greatly on the operating conditions, such as:
- Type and temperature of the product
- Type and temperature of the cleaning agent
- Number of cleanings
- Number of sterilizations
- Operating environment

Recommended intervals for seal replacement (reference values)

Application	Window
Media with temperatures from 50 to 100 °C (122 to 212 °F)	Approx. 18 months
Media with temperatures < 50 °C (122 °F)	Approx. 36 months
Sterilization cycles, max. 150 °C (302 °F), 45 min.	Approx. 400 cycles

To ensure your sensor is operational again after being exposed to very high loads, you can have it regenerated in the factory. In the factory, the sensor is fitted with new seals and recalibrated.

Please contact your sales office for information on replacing the seal and recalibration in the factory.

8.4 Return

The product must be returned if repairs or a factory calibration are required, or if the wrong product was ordered or delivered. As an ISO-certified company and also due to legal regulations, Endress+Hauser is obliged to follow certain procedures when handling any returned products that have been in contact with medium.

To ensure the swift, safe and professional return of the device:

- Refer to the website www.endress.com/support/return-material for information on the procedure and conditions for returning devices.

8.5 Disposal



If required by the Directive 2012/19/EU on waste electrical and electronic equipment (WEEE), the product is marked with the depicted symbol in order to minimize the disposal of WEEE as unsorted municipal waste. Do not dispose of products bearing this marking as unsorted municipal waste. Instead, return them to the manufacturer for disposal under the applicable conditions.

9 Technical data

9.1 Input

9.1.1 Measured variables

- Conductivity
- Temperature

9.1.2 Measuring ranges

Conductivity	(in relation to water at 25 °C (77 °F))
CLS15D -A	0.04 to 20 µS/cm
CLS15D -B/L	0.10 to 200 µS/cm
CLS16D	0.04 to 500 µS/cm
CLS21D	10 µS/cm to 20 mS/cm
Temperature	
CLS15D	-20 to 100 °C (-4 to 212 °F)
CLS16D	-5 to 100 °C (23 to 212 °F)
CLS21D	-20 to 100 °C (-4 to 212 °F)

9.1.3 Cell constant

CLS15D -A	k = 0.01 cm^{-1}
CLS15D -B/L	k = 0.1 cm^{-1}
CLS16D	k = 0.1 cm^{-1}
CLS21D	k = 1.0 cm^{-1}, nominal

9.1.4 Temperature compensation

NTC 30K

9.2 Performance characteristics

9.2.1 Measuring uncertainty

CLS15D

Each individual sensor is factory-measured in a solution of approx. 5 µS/cm for cell constant 0.01 cm^{-1} or approx. 50 µS/cm for cell constant 0.1 cm^{-1} using a reference measuring system traceable to NIST or PTB. The exact cell constant is entered into the manufacturer inspection certificate supplied. The uncertainty of measurement in determining the cell constant is 1.0 %.

CLS16D

Each individual sensor is factory-measured in a solution of approx. 5 µS/cm using a reference measuring system traceable to NIST or PTB. The exact cell constant is entered into the

manufacturer inspection certificate supplied. The uncertainty of measurement in determining the cell constant is 1.0 %.

CLS21D

Each individual sensor is factory-measured in a solution of approx. 5 mS/cmusing a reference measuring system traceable to NIST or PTB. The exact cell constant is entered into the manufacturer inspection certificate supplied. The uncertainty of measurement in determining the cell constant is 1.0 %.

9.2.2 Response time

Conductivity	$t_{95} \leq 3$ s
Temperature	
CLS15D-A	$t_{90} \leq 39$ s
CLS15D-B/L	$t_{90} \leq 17$ s
CLS16D	$t_{90} \leq 13$ s
CLS21D	$t_{90} \leq 296$ s

9.2.3 Maximum measured error

CLS15D	2% of reading
CLS16D	2 % of reading up to 200 µS/cm 3 % of reading from 200 to 500 µS/cm
CLS21D	5% of reading

9.2.4 Repeatability

0.2% of reading

9.3 Environment

9.3.1 Ambient temperature

−20 to 60 °C (−4 to 140 °F)

9.3.2 Storage temperature

-25 to +80 °C (-10 to +180 °F)

9.3.3 Degree of protection

IP 68 / NEMA type 6P (1 m water column, 25 °C, 24 h)

9.4 Process

9.4.1 Process temperature

CLS15D	
Normal operation	-20 to 120 °C (-4 to 248 °F)
Sterilization (max. 1 h) [1]	Max. 140 °C (284 °F)
CLS16D	
Normal operation	-5 to 120 °C (23 to 248 °F)
Sterilization (max. 45 min)	Max. 150 °C (302 °F) at 6 bar (87 psi) absolute
CLS21D	-20 to 135 °C (-4 to 275 °F) at 3.5 bar (50 psi) absolute

1) Threaded versions: max. 30 minutes

The maximum temperature for communication with the transmitter is 130 °C (266°F) for the Memosens versions.

9.4.2 Process pressure

CLS15D	13 bar (188 psi) absolute, at 20 °C (68 °F) 2 bar (29 psi) absolute, at 120 °C (248 °F)
CLS16D	13 bar (188 psi) absolute, at 20 °C (68 °F) 9 bar (130 psi) absolute, at 120 °C (248 °F) 0.1 bar (1.5 psi) absolute (negative pressure), at 20 °C (68 °F)
CLS21D	17 bar (246 psi) absolute, at 20 °C (68 °F)

9.4.3 Temperature/pressure ratings

CLS15D

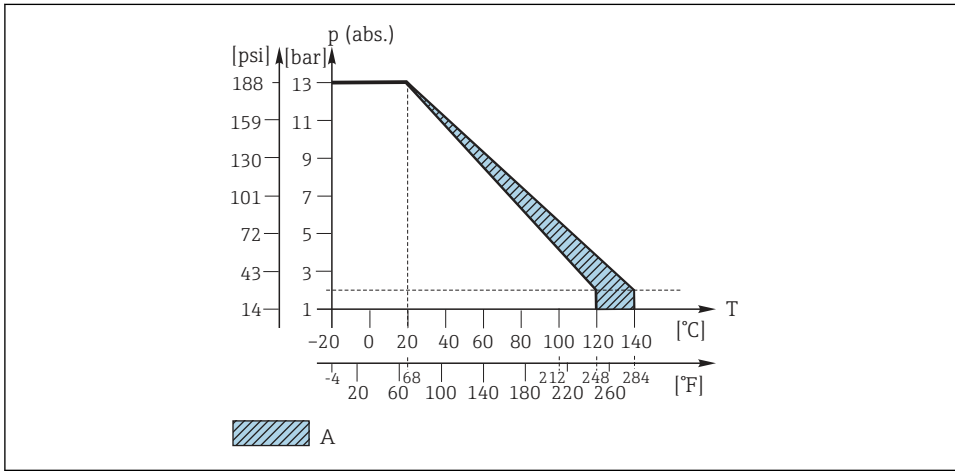

11 Mechanical pressure-temperature resistance

A Can be sterilized for a short time (1 hour)

CLS16D

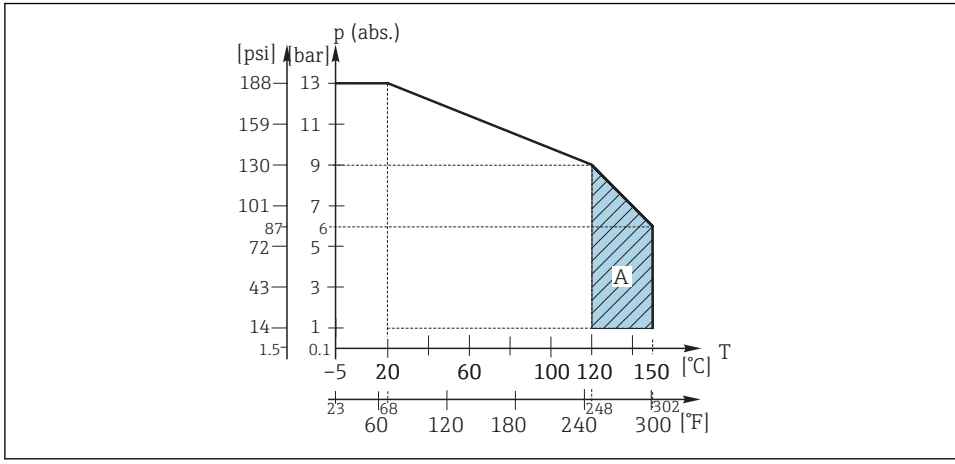

12 Mechanical pressure-temperature resistance

A Can be sterilized for a short time (45 min.)

CLS21D

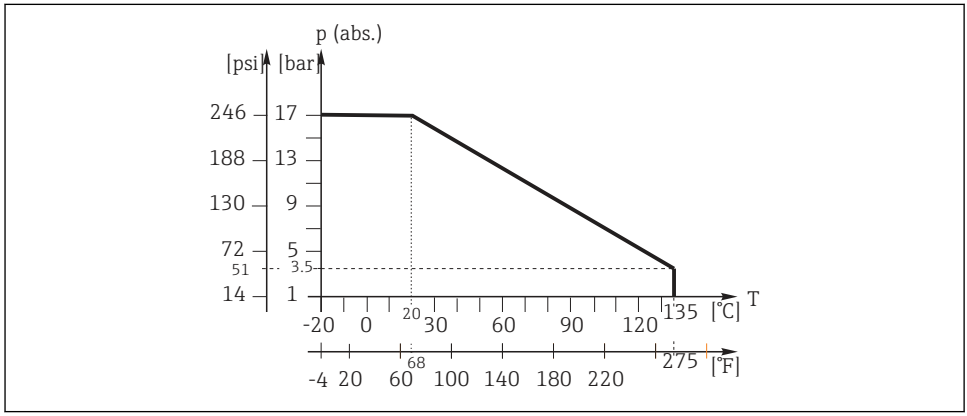

13 Mechanical pressure-temperature resistance

9.5 Mechanical construction

9.5.1 Weight

CLS15D and CLS21D

Approx. 0.3 kg (0.66 lbs) depending on version

CLS16D

Approx. 0.13 to 0.75 kg (0.29 to 1.65 lbs) depending on version

9.5.2

CLS15D

Electrodes	Polished, stainless steel 1.4435 (AISI 316L)
Sensor shaft	Polyethersulfone (PES-GF20)
O-ring, in contact with medium (only Clamp version)	EPDM

CLS16D

Electrodes	Electropolished, stainless steel 1.4435 (AISI 316L)
Seal	Gasket seal ISOLAST (FFKM), FDA-compliant

CLS21D

Electrodes	Graphite
Sensor shaft	Polyethersulfone (PES-GF20)
Thermal conductivity socket for temperature probe	Titanium 3.7035
Clamp process connection	
▪ Process connection	▪ Stainless steel 1.4435
▪ Seal	▪ EPDM

9.5.3 Process connection

CLS15D

Thread NPT ½" and ¾"
Clamp 1½" as per ISO 2852

CLS16D

Clamp 1", 1½", 2" as per ISO 2852 (also suitable for TRI-CLAMP, DIN 32676)
Tuchenhagen VARIVENT N DN 50 to 125
NEUMO BioControl D50

CLS21D

Thread G1
NPT 1" thread
Clamp 2" as per ISO 2852
Sanitary connection DN 25 and DN 40 as per DIN 11851

9.5.4 Surface roughness (only CLS15D, CLS16D)

CLS15D

$R_a \leq 0.8$ µm

CLS16D

$R_a \leq 0.8$ µm, electropolished
$R_a \leq 0.38$ µm, electropolished, optional



www.addresses.endress.com

Endress+Hauser

People for Process Automation