TI01443T/09/EN/03.25-00
71724388
2025-10-30



# Technical Information
# iTHERM MultiSens Bundle TMS31
# Multipoint thermometer

Direct contact TC/RTD temperature profiling solution with flexible metal rope for silos and storage tank applications



## Application

- For installation under various application conditions in silos or tanks
- Bulk material silos
- Oil and fuel storage tanks
- For installation in a container, reactor, tank, or similar

## Your benefits

- Easy installation and process integration thanks to flexible and wide-ranging product configuration options
- Customisable design owing to the flexible metal rope
- Long product life and uninterrupted temperature monitoring due to the robust design
- International certifications: explosion protection in accordance with ATEX, IECEx, EAC, for example

Endress+Hauser
People for Process Automation

# Table of contents

**Function and system design** . . . . . 3
Measuring principle . . . . . 3
Measuring system . . . . . 3
Device architecture . . . . . 4

**Input** . . . . . 6
Measured variable . . . . . 6
Measuring range . . . . . 6

**Output** . . . . . 7
Output signal . . . . . 7
Family of temperature transmitters . . . . . 7

**Power supply** . . . . . 7
Wiring diagrams . . . . . 8

**Performance characteristics** . . . . . 11
Maximum measurement error . . . . . 11
Influence of ambient temperature . . . . . 12
Response time . . . . . 12
Calibration . . . . . 13

**Installation** . . . . . 13
Installation location . . . . . 13
Orientation . . . . . 13
Installation instructions . . . . . 14

**Environment** . . . . . 15
Ambient temperature range . . . . . 15
Storage temperature . . . . . 15
Relative humidity . . . . . 15
Climate class . . . . . 15
Degree of protection . . . . . 15
Vibration-resistance and shock-resistance . . . . . 15
Electromagnetic compatibility (EMC) . . . . . 16

**Process** . . . . . 16
Process temperature range . . . . . 16
Process pressure range . . . . . 16

**Mechanical construction** . . . . . 16
Design, dimensions . . . . . 16
Weight . . . . . 20
Materials . . . . . 20
Process connection . . . . . 21

**Operability** . . . . . 25

**Certificates and approvals** . . . . . 25
Ordering information . . . . . 25

**Accessories** . . . . . 26
Device-specific accessories . . . . . 26
Communication-specific accessories . . . . . 27
System products . . . . . 27

**Documentation** . . . . . 28

# Function and system design

## Measuring principle

### Thermocouples (TC)

Thermocouples are comparatively simple, robust temperature sensors which use the Seebeck effect for temperature measurement: if two electrical conductors made of different materials are connected at a point, a weak electrical voltage can be measured between the two open conductor ends if the conductors are subjected to a thermal gradient. This voltage is called thermoelectric voltage or electromotive force (emf). Its magnitude depends on the type of conducting materials and the temperature difference between the "measuring point" (the junction of the two conductors) and the "cold junction" (the open conductor ends). Accordingly, thermocouples primarily only measure differences in temperature. The absolute temperature at the measuring point can be determined from these if the associated temperature at the cold junction is known or is measured separately and compensated for. The material combinations and associated thermoelectric voltage/temperature characteristics of the most common types of thermocouple are standardized in the IEC 60584 and ASTM E230/ANSI MC96.1 standards.

### Resistance thermometers (RTD assemblies)

Resistance thermometers use a Pt100 temperature sensor in accordance with IEC 60751. This temperature sensor is a temperature-sensitive platinum resistor with a resistance of 100 Ω at 0 °C (32 °F) and a temperature coefficient α = 0.003851 °C-1.

There are generally two different kinds of platinum resistance thermometers:

**There are two different versions of platinum resistance thermometers:**

- **Wire-wound (WW):WW** In these thermometers, a double coil of fine, high-purity platinum wire is accommodated in a ceramic support. This support is then sealed top and bottom with a ceramic protective layer. These resistance thermometers not only facilitate very reproducible measurements but also offer good long-term stability of the resistance/temperature characteristic within temperature ranges up to 600 °C (1 112 °F). This type of sensor is relatively large in size and is comparatively sensitive to vibrations.
- **Thin-film platinum resistance thermometers(TF):** A very thin, ultrapure platinum layer, approx. 1 µm thick, is vaporized in a vacuum on a ceramic substrate and then structured photolithographically. The platinum conductor paths formed in this way create the measuring resistance. Additional covering and passivation layers are applied and reliably protect the thin platinum layer from contamination and oxidation, even at high temperatures.

## Measuring system

The manufacturer provides a complete portfolio of optimized components for the temperature measuring point – everything needed for seamless integration of the measuring point into the overall facility.

These include:

- Power supply unit/active barrier
- Configuration units
- Overvoltage protection

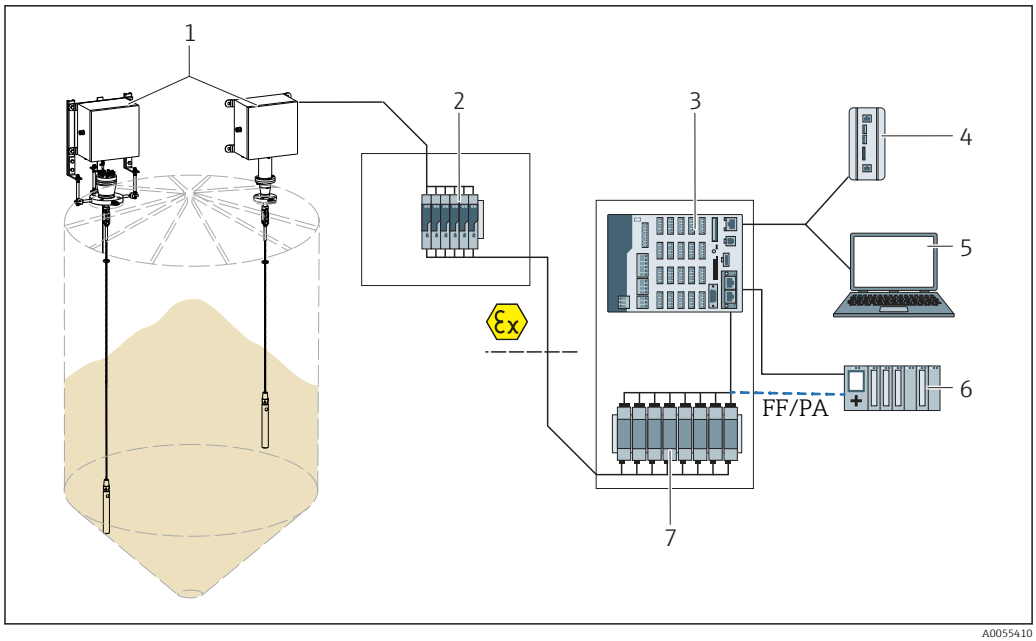


1 *Application example in a silo.*

1 *Mounted multipoint thermometer, optionally with built-in transmitters in the junction box for 4 to 20 mA, HART, PROFIBUS® PA and FOUNDATION Fieldbus™ communication or with terminal blocks for remote wiring.*
2 *iTEMP TMT82 or other Ex approved transmitters*
3 *Data Manager from the RSG product family with data recording, calculation, logic control, limit value monitoring, alarm and event output for 4 to 20 mA or HART communication*
4 *Edge device SGC500*
5 *Device configuration with application software FieldCare*
6 *Fieldbus to DCS/PLC*
7 *Active barrier of the RN series (24 $V_{DC}$, 30 mA) with galvanically isolated output for the power supply of loop-powered transmitters. The universal power supply works with an input supply voltage of 20 to 250 V DC/AC; 50/60 Hz, which means that it can be used in all international power grids.*

## Device architecture

The device belongs to a series of modular products for multiple temperature measurements. The design allows for the replacement of individual subassemblies and components, making maintenance and spare parts management easier.

The unit consists of several sub-assemblies:

- Temperature sensors
- Stainless steel rope
- Stabilization weight
- Process connection
- Neck extension (see below for a more detailed description)

The device measures the temperature profile in the process environment using multiple sensors. These are connected to an appropriate process connection that ensures the process is leak-tight.

Output communication protocols available are: Analog output 4 to 20 mA, HART®, PROFIBUS® PA, FOUNDATION Fieldbus™. For the Memograph M RSG45: Ethernet TCP/IP, Modbus (TCP) USB-B (web server etc.) USB-A (USB stick, data storage, barcode reader, printer etc.) SD card for data storage, PROFINET, Ethernet/IP, PROFIBUS DP, RS232/RS485 (Modbus RTU). On the other side, the

extension cables are wired to the junction box, which can either be mounted directly or installed remotely.

**Design**

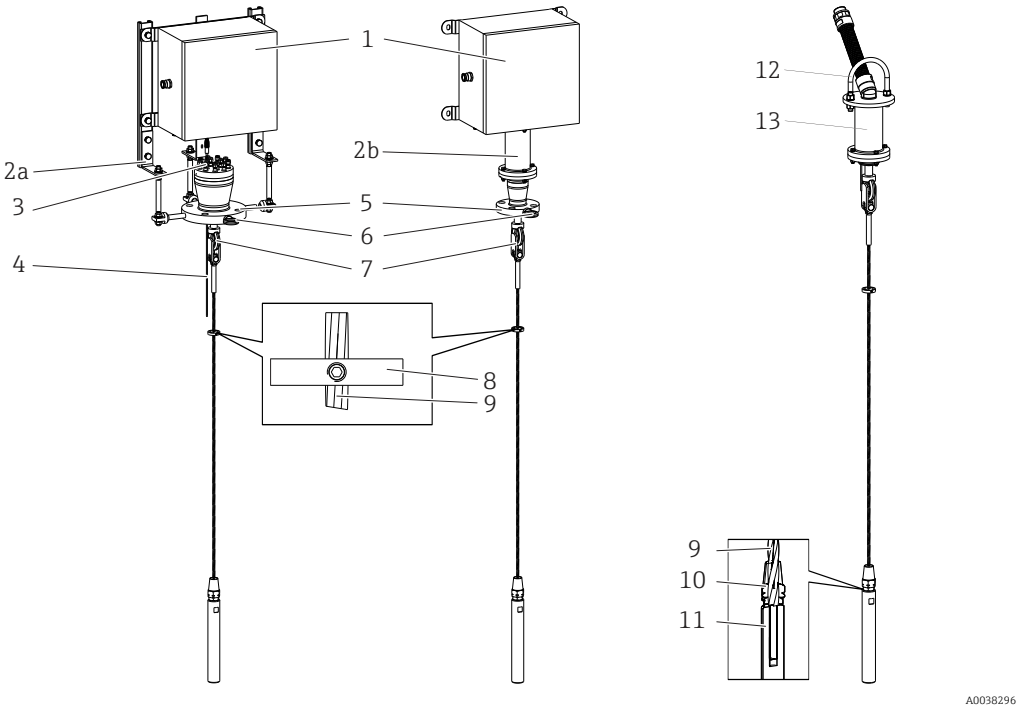


2 *iTHERM MultiSens bundle with open frame with guard (left), iTHERM MultiSens bundle with neck extension (center) and iTHERM Multisens bundle with roof hook (right).*

| Description and available options | |
|---|---|
| 1: Head | Hinged cover junction box for electrical connections. It includes components such as electrical terminals, transmitters and cable glands.<br>▪ 316/316L<br>▪ Aluminum<br>▪ Other materials on request |
| 2a: Open supporting frame | Modular support that is adjustable for all available junction boxes and ensures extension cable inspection.<br>304 |
| 2b: Neck extension | Modular tube frame support adjustable for all available junction boxes.<br>Material:<br>316/316L |
| 3: Compression fitting | Provides highly reliable sealing between the process and external environment. Suitable for a wide range of media and combinations of high temperature and pressure.<br>Material:<br>316L |
| 4: Temperature sensor | Thermocouple (grounded or ungrounded) or resistance thermometer (R100 wire-wound type). |
| 5: Process connection | Flange according to international standards or customer-specific flange to meet process requirements. |
| 6: Eyebolt | Lifting device for easy handling during installation phase.<br>Material:<br>▪ 316<br>▪ Size 8.8 |

| Description and available options | |
|---|---|
| 7: Toggle joint | Connection between the rope and the process connection<br>Material:<br>316 |
| 8: Positioning guides | Insert guide for correct positioning of the measuring element<br>Material:<br>316/316L |
| 9: Rope | Metallic rope<br>Material:<br>316 |
| 10: Locking screw | Locking screw used as a closure element.<br>Material:<br>316 |
| 11: Weight | Weight to keep the rope tensioned and in a straight position during operation (e.g. when the tank is being filled).<br>Material:<br>316/316L |
| 12: Bracket | Device for suspending the multipoint thermometer from the silo roof.<br>Material:<br>A4 in accordance with DIN ISO 3506 |
| 13: Extension | Tube extension for suspending the multipoint thermometer.<br>Material:<br>316/316L |

# Input

**Measured variable**

Temperature (temperature-linear transmission behavior)

**Measuring range**

*RTD:*

| Input | Description | Measuring range limits |
|---|---|---|
| RTD | WW | −200 to +600 °C (−328 to +1 112 °F) |
| RTD | TF 6 mm | −50 to +400 °C (−58 to +752 °F) |
| RTD | TF 3 mm | −50 to +250 °C (−58 to +482 °F) |
| RTD | iTHERM StrongSens 6 mm | −50 to +500 °C (−58 to +932 °F) |

*Thermocouple:*

| Input | Description | Measuring range limits |
|---|---|---|
| Thermocouples (TC) as per IEC 60584, part 1 - using an Endress+Hauser - iTEMP temperature head transmitter | Type J (Fe-CuNi)<br>Type K (NiCr-Ni) | −40 to +520 °C (−40 to +968 °F)<br>−40 to +800 °C (−40 to +1 472 °F) |
| | Internal cold junction (Pt100)<br>Accuracy of cold junction: ± 1 K<br>Max. sensor resistance: 10 kΩ | |

# Output

**Output signal**

The measured values are transmitted in two ways:
- Directly-wired sensors - sensor measured values forwarded without a transmitter.
- Via all common protocols by selecting an appropriate Endress+Hauser iTEMP temperature transmitter. All the transmitters listed below are mounted directly in the junction box and wired with the sensory mechanism.

**Family of temperature transmitters**

Thermometers fitted with iTEMP transmitters are an installation-ready complete solution to improve temperature measurement by significantly increasing measurement accuracy and reliability, when compared to direct wired sensors, as well as reducing both wiring and maintenance costs.

**4-20 mA head transmitter**
They offer a high degree of flexibility, thereby supporting universal application with low inventory storage. The iTEMP transmitters can be configured quickly and easily at a PC. Endress+Hauser offers free configuration software which can be downloaded from the Endress+Hauser website.

**HART head transmitter**
The iTEMP transmitter is a 2-wire device with one or two measuring inputs and one analog output. The device not only transfers converted signals from resistance thermometers and thermocouples, it also transfers resistance and voltage signals using HART communication. Swift and easy operation, visualization and maintenance using universal configuration software like FieldCare, DeviceCare or FieldCommunicator 375/475. Integrated Bluetooth® interface for the wireless display of measured values and configuration via Endress +Hauser SmartBlue app, optional.

**PROFIBUS PA head transmitter**
Universally programmable iTEMP head transmitter with PROFIBUS PA communication. Conversion of various input signals into digital output signals. High measurement accuracy over the complete operating temperature range. PROFIBUS PA functions and device-specific parameters are configured via fieldbus communication.

**FOUNDATION Fieldbus™ head transmitters**
Universally programmable iTEMP head transmitter with FOUNDATION Fieldbus™ communication. Conversion of various input signals into digital output signals. High measurement accuracy over the complete operating temperature range. All iTEMP transmitters are approved for use in all the main process control systems. The integration tests are performed in Endress+Hauser's 'System World'.

**Head transmitter with PROFINET and Ethernet-APL™**
The iTEMP transmitter is a 2-wire device with two measuring inputs. The device not only transfers converted signals from resistance thermometers and thermocouples, it also transfers resistance and voltage signals using the PROFINET protocol. Power is supplied via the 2-wire Ethernet connection according to IEEE 802.3cg 10Base-T1. The iTEMP transmitter can be installed as an intrinsically safe electrical apparatus in Zone 1 hazardous areas. The device can be used for instrumentation purposes in the terminal head form B (flat face) according to DIN EN 50446.

**Head transmitter with IO-Link**
The iTEMP transmitter is an IO-Link device with a measurement input and an IO-Link interface. It offers a configurable, simple and cost-effective solution thanks to digital communication via IO-Link. The device is mounted in a terminal head form B (flat face) as per DIN EN 5044.

**Advantages of the iTEMP transmitters:**
- Dual or single sensor input (optionally for certain transmitters)
- Attachable display (optionally for certain transmitters)
- Unsurpassed reliability, accuracy and long-term stability in critical processes
- Mathematical functions
- Monitoring of the thermometer drift, sensor backup functionality, sensor diagnostic functions
- Sensor-transmitter-matching based on the Callendar van Dusen coefficients (CvD).

# Power supply

- Electrical connecting cables must be smooth, corrosion resistant, easy to be cleaned and inspected, robust against mechanical stresses, no-humidity sensitivity.
- Grounding or shielding connections are possible via ground terminals on the junction box.

## Wiring diagrams

### RTD sensor connection type

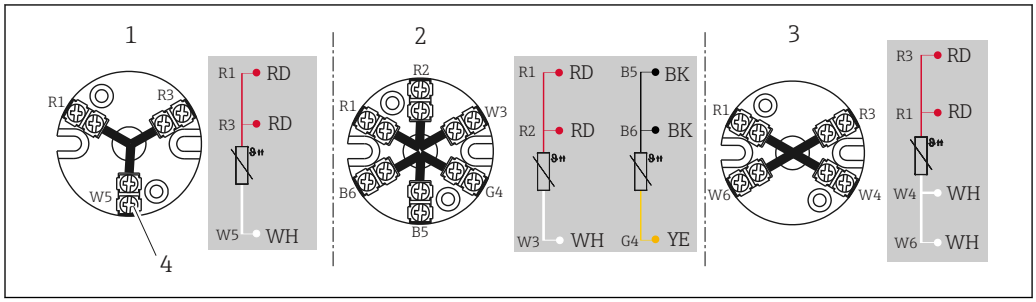


A0045453

3 *Mounted terminal block*

1 *3-wire, single*
2 *2 x 3-wire, single*
3 *4-wire, single*
4 *Outside screw*

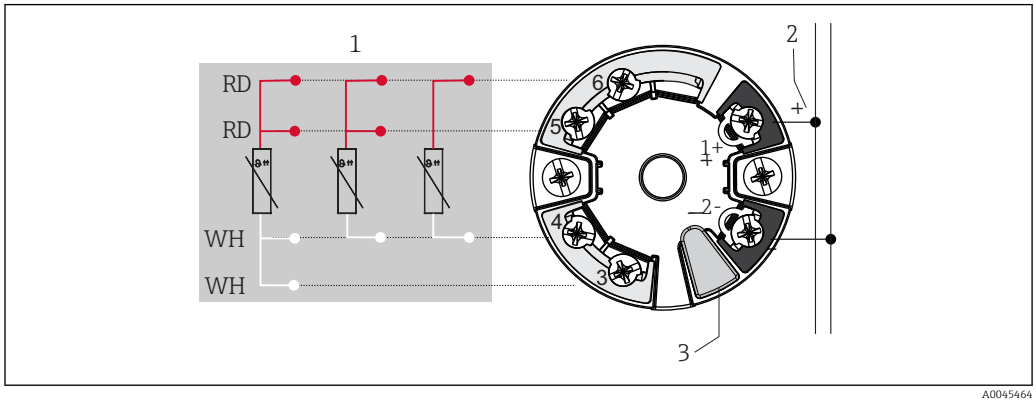


A0045464

4 *Head-mounted transmitter TMT7x or TMT31 (single input)*

1 *Sensor input, RTD and Ω: 4-, 3- and 2-wire*
2 *Power supply or fieldbus connection*
3 *Display connection/CDI interface*

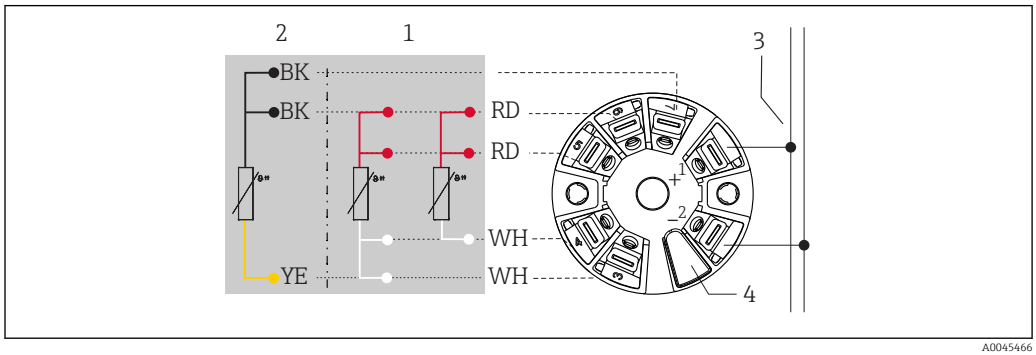


A0045466

5 *Head-mounted transmitter TMT8x (dual input)*

1 *Sensor input 1, RTD: 4- and 3-wire*
2 *Sensor input 2, RTD: 3-wire*
3 *Power supply or fieldbus connection*
4 *Display connection*

**Mounted field transmitter:** Fitted with screw terminals

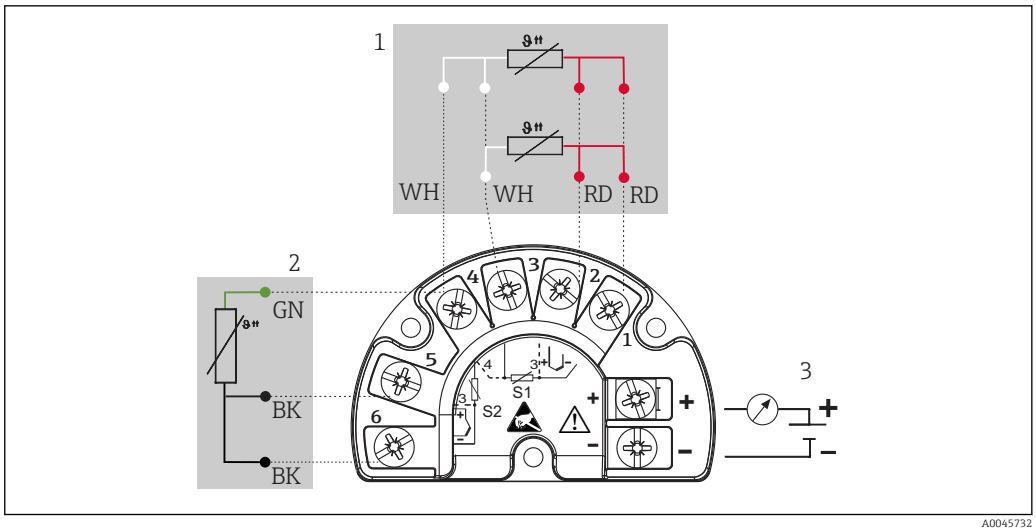


6 *TMT162 (dual input)*

1 *Sensor input 1, RTD: 3- and 4-wire*
2 *Sensor input 2, RTD: 3-wire*
3 *Power supply, field transmitter and analog output 4 to 20 mA or fieldbus connection*

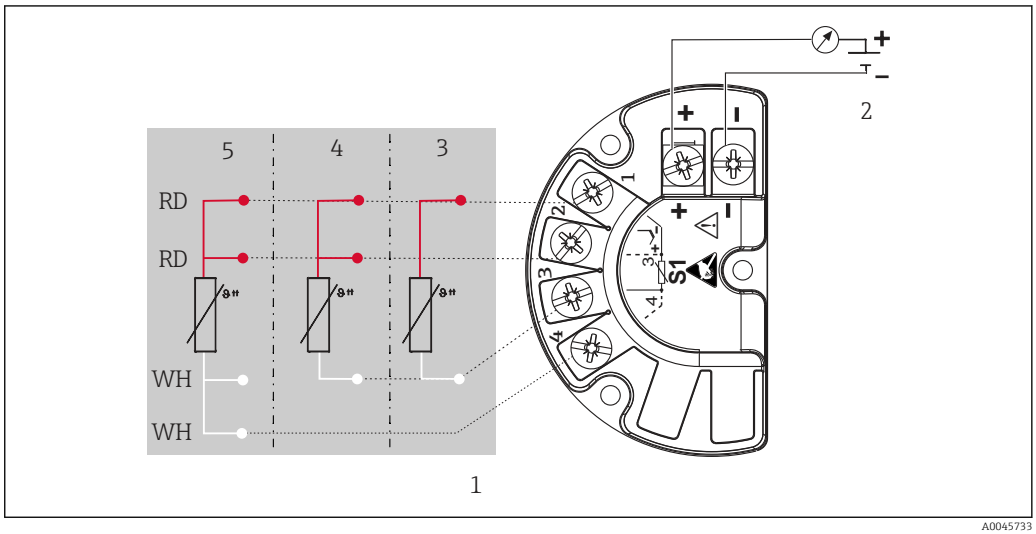


7 *TMT142B (single input)*

1 *Sensor input RTD*
2 *Power supply, field transmitter and analog output 4 to 20 mA, HART® signal*
3 *2-wire*
4 *3-wire*
5 *4-wire*

**Thermocouple (TC) sensor connection type**

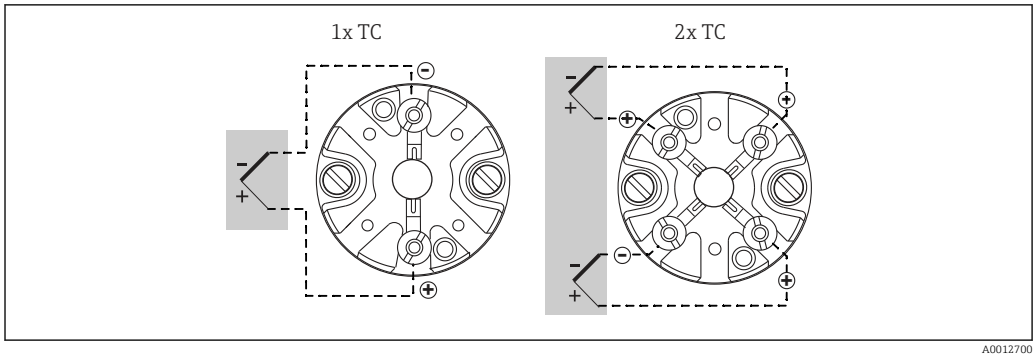


*8 Mounted terminal block*

**Head-mounted transmitter TMT8x (dual sensor input) [1]**

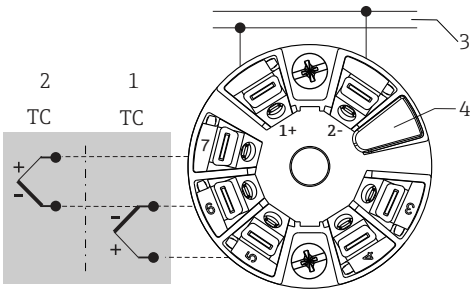


*1 Sensor input 1*
*2 Sensor input 2*
*3 Fieldbus communication and power supply*
*4 Display connection*

**Head-mounted transmitter TMT7x or TMT31 (single input) [1]**

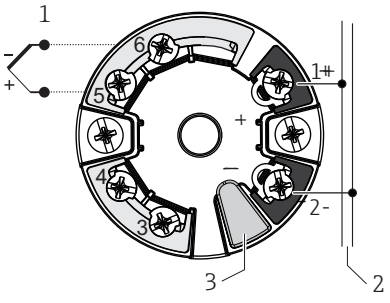


*1 Sensor input TC, mV*
*2 Power supply, bus connection*
*3 Display connection/CDI interface*

**Mounted field transmitter TMT162 or TMT142B**

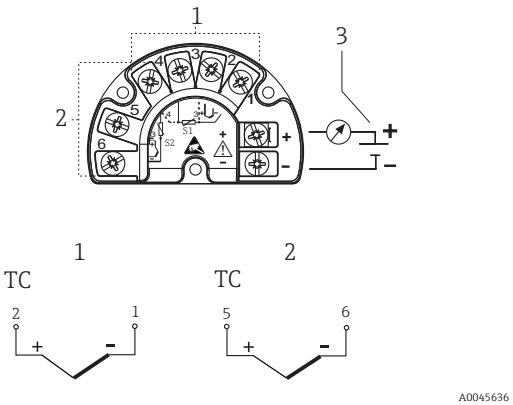


*1 Sensor input 1*
*2 Sensor input 2 (not TMT142B)*
*3 Supply voltage for field transmitter and analog output 4 to 20 mA or fieldbus communication*

1) Fitted with spring terminals if screw terminals are not explicitly selected or a dual sensor is installed.

*Thermocouple wire colors*

| As per IEC 60584 | As per ASTM E230 |
|---|---|
| ▪ Type J: black (+), white (-)<br>▪ Type K: green (+), white (-)<br>▪ Type N: pink (+), white (-)<br>▪ Type T: brown (+), white (-) | ▪ Type J: white (+), red (-)<br>▪ Type K: yellow (+), red (-)<br>▪ Type N: orange (+), red (-)<br>▪ Type T: blue (+), red (-) |

# Performance characteristics

**Maximum measurement error**

RTD resistance thermometer according to IEC 60751

| Class | Max. tolerances (°C) | Characteristics |
|---|---|---|
| **RTD maximum sensor error** | | |
| Cl. A | ± (0.15 + 0.002 · \|t\| [1]) | 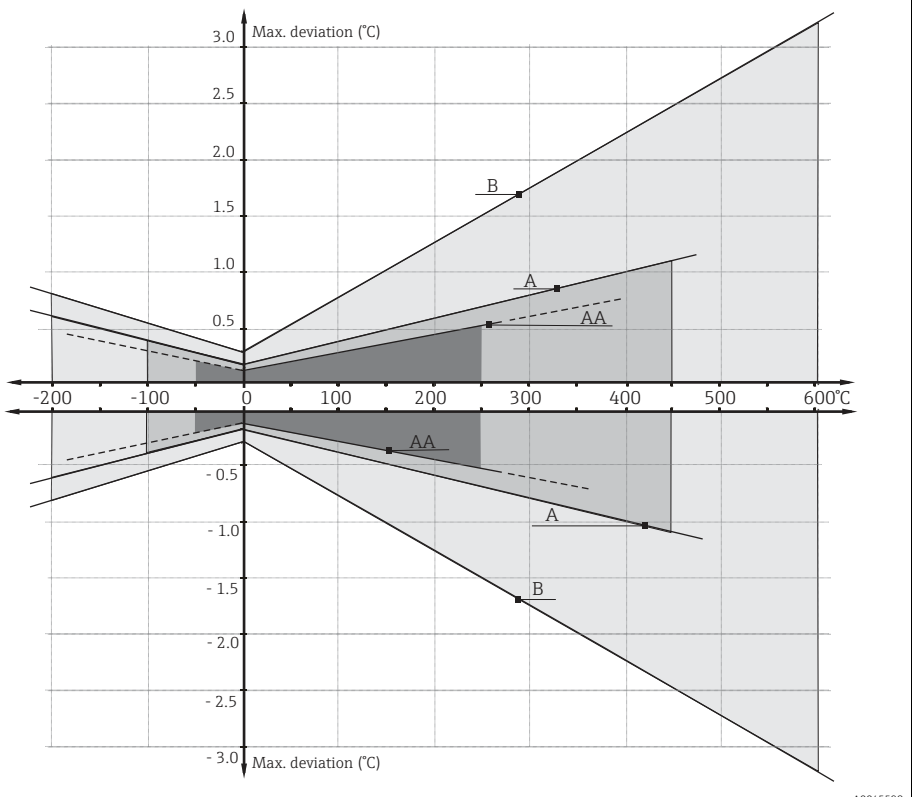 |
| Cl. AA, previously 1/3 Cl. B | ± (0.1 + 0.0017 · \|t\|) [1] | |
| Cl. B | ± (0.3 + 0.005 · \|t\| [1]) | |



1) |t| = Temperature absolute value in °C

To get the maximum tolerances in °F, multiply the results in °C by a factor of 1.8.

*Temperature ranges*

| Sensor type [1] | Operating temperature range | Class B | Class A | Class AA |
|---|---|---|---|---|
| Pt100 (TF)<br>Standard | −50 to +400 °C<br>(−58 to +752 °F) | 3 mm:<br>−50 to +250 °C<br>(−58 to +482 °F)<br>6 mm:<br>−50 to +400 °C<br>(−58 to +752 °F) | −30 to +250 °C<br>(−22 to +482 °F) | 0 to +150 °C<br>(+32 to +302 °F) |
| Pt100 (TF)<br>iTHERM StrongSens | −50 to +500 °C<br>(−58 to +932 °F) | −50 to +500 °C<br>(−58 to +932 °F) | −30 to +300 °C<br>(−22 to +572 °F) | 0 to +150 °C<br>(+32 to +302 °F) |
| Pt100 (WW) | −200 to +600 °C<br>(−328 to +1 112 °F) | −200 to +600 °C<br>(−328 to +1 112 °F) | −100 to +450 °C<br>(−148 to +842 °F) | −50 to +250 °C<br>(−58 to +482 °F) |

1) Options depend on product and configuration

Permissible deviation limits of thermoelectric voltages from the standard characteristic for thermocouples as per IEC 60584 or ASTM E230/ANSI MC96.1:

| Standard | Type | Standard tolerance | | Special tolerance | |
|---|---|---|---|---|---|
| IEC 60584 | | Class | Deviation | Class | Deviation |
| | J (Fe-CuNi) | 2 | ±2.5 °C (−40 to +333 °C)<br>±0.0075 \|t\| [1] (333 to 750 °C) | 1 | ±1.5 °C (−40 to +375 °C)<br>±0.004 \|t\| [1] (375 to 750 °C) |
| | K (NiCr-NiAl)<br>N (NiCrSi-NiSi) | 2 | ±0.0075 \|t\| [1] (333 to 1 200 °C)<br>±2.5 °C (−40 to +333 °C)<br>±0.0075 \|t\| [1] (333 to 1 200 °C) | 1 | ±1.5 °C (−40 to +375 °C)<br>±0.004 \|t\| [1] (375 to 1 000 °C) |

1) \|t\| = absolute value in °C

Thermocouples made of base metals are generally supplied so that they comply with the manufacturing tolerances specified in the tables for temperatures > −40 °C (−40 °F). These materials are generally not suitable for temperatures < −40 °C (−40 °F). The tolerances of Class 3 cannot be met. A separate material must be selected for this temperature range. This cannot be handled via the standard product.

| Standard | Type | Tolerance class: Standard | Tolerance class: Special |
|---|---|---|---|
| ASTM E230/ANSI MC96.1 | | Deviation; the larger value applies in each case | |
| | J (Fe-CuNi) | ±2.2 K or ±0.0075 \|t\| [1] (0 to 760 °C) | ±1.1 K or ±0.004 \|t\| [1]<br>(0 to 760 °C) |
| | K (NiCr-NiAl)<br>N (NiCrSi-NiSi) | ±2.2 K or ±0.02 \|t\| [1] (−200 to 0 °C)<br>±2.2 K or ±0.0075 \|t\| [1]<br>(0 to 1 260 °C) | ±1.1 K or ±0.004 \|t\| [1]<br>(0 to 1 260 °C) |

1) \|t\| = absolute value in °C

The materials for thermocouples are generally supplied in such a way that they comply with the tolerances specified in the table for temperatures > 0 °C (32 °F). These materials are generally not suitable for temperatures < 0 °C (32 °F). The specified tolerances cannot be satisfied. A separate material must be selected for this temperature range. This cannot be handled via the standard product.

**Influence of ambient temperature**

Depends on the head transmitter used. For details, see the relevant Technical Information.

**Response time**

Response time for the sensor assembly without transmitter. Refers to temperature sensors in direct contact with the process.

**RTD**

Calculated at an ambient temperature of approx. 23 °C by immersing the measuring element in flowing water (0.4 m/s flow rate, 10 K temperature step):

| Diameter | Response time | |
|---|---|---|
| Mineral-insulated cable, 3 mm (0.12 in) | $t_{50}$ | 2 s |
| | $t_{90}$ | 5 s |
| RTD insert StrongSens, 6 mm (¼ in) | $t_{50}$ | < 3.5 s |
| | $t_{90}$ | < 10 s |

**Thermocouple (TC)**

Calculated at an ambient temperature of approx. 23 °C by immersing the measuring element in flowing water (0.4 m/s flow rate, 10 K temperature step):

| Diameter | Response time | |
|---|---|---|
| Grounded thermocouple:<br>3 mm (0.12 in), 2 mm (0.08 in) | $t_{50}$ | 0.8 s |
| | $t_{90}$ | 2 s |
| Ungrounded thermocouple:<br>3 mm (0.12 in), 2 mm (0.08 in) | $t_{50}$ | 1 s |
| | $t_{90}$ | 2.5 s |

**Calibration**

Calibration is a service that can be performed on each individual temperature sensor, either during the multipoint production phase in the factory or after multipoint installation in the plant.

If calibration is to be performed after the multipoint is installed, please contact the Endress +Hauser service team for support. The manufacturer's service team can assist in organizing all additional activities required for calibration of the intended sensor. Components screwed to the process connection must not be loosened under operating conditions while the process is running.

Calibration involves comparing the measured values of the measuring elements of the multipoint thermometer (unit under test) with those of a more precise calibration standard using a defined and reproducible measurement method. The aim is to determine the deviation of the DUT measured values from the true value of the measured variable.

Two different methods are used for the temperature sensors:
- Calibration at fixed point, e.g. at the freezing point of water at 0 °C (32 °F).
- Calibration by comparison with a precise reference thermometer

**Evaluation**

If calibration with acceptable measurement uncertainty and transferable measurement results is not possible, the manufacturer offers verification measurements (evaluation) as a service, where technically feasible.

# Installation

**Installation location**

Ensure that the installation location meets the requirements specified in this document, including ambient temperature, degree of protection and climate class. The dimensions of possible existing support frames or brackets welded on the wall of the storage tank or of any other existing frame in the installation area must be carefully checked.

**Orientation**

The device with rope probe can be installed in a vertical position. The storage tank or silo may have a horizontal or sloped roof – the connection joint of the rope probe automatically compensates for the inclination to ensure the rope always remains straight and vertically aligned.

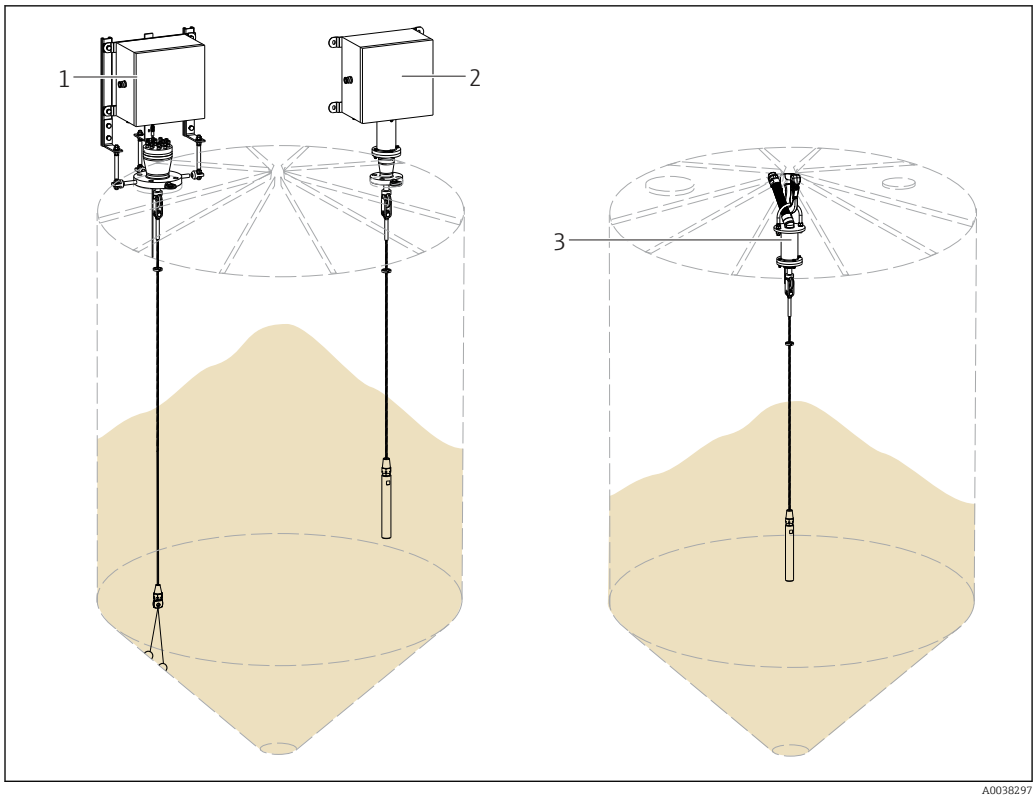


9 *Installation examples*

*1 iTHERM MultiSens Bundle TMS31 with hook for anchoring to the bottom*
*2 iTHERM MultiSens Bundle TMS31 with freely suspended weight*
*3 iTHERM MultiSens Bundle TMS31 suspended from the ceiling with a hook*

## Installation instructions

The modular device with rope probe and flanged process connection or roof-mounted hook is designed for installation in a storage tank, silo or similar environment. All parts and components must be handled with care. While installing, lifting or inserting the device, avoid the following:

- Incorrect alignment with the entry axis
- Any load on the welded or threaded parts due to the weight of the device
- Deformation or crushing of the threaded components, bolts, nuts, cable glands and compression fittings
- Friction between the temperature probes and components inside the storage tank
- Excessive twisting of the rope around its axis, as this may damage the rope or the temperature probes

Ensure that the following conditions are met:

- When using a suspended weight, make sure the weight does not touch the bottom of the storage tank.
- When using a tensioning device, the rope must be correctly tensioned using suitable hooks or similar systems.

It is the end user's responsibility to decide whether hooks or similar systems are used.

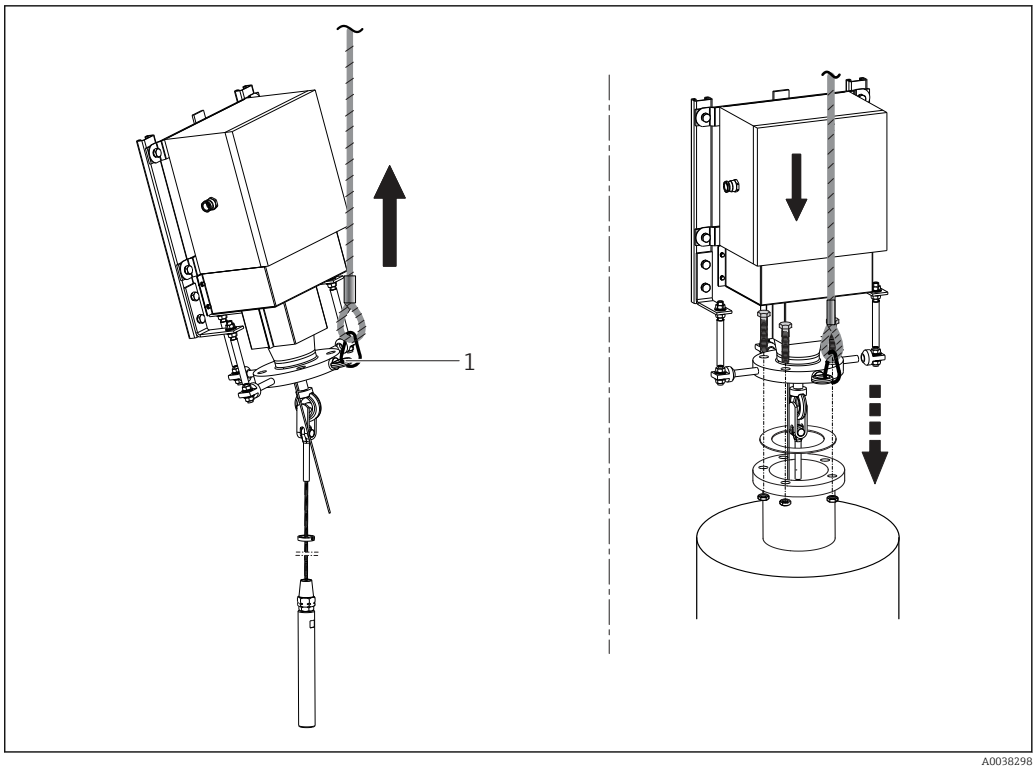


*10 Installation using a flanged process connection in a storage tank nozzle*

During installation, lift and move the entire device only using ropes and the eyebolt of the flange (1) in order to keep the device as straight as possible.

# Environment

**Ambient temperature range**

| Junction box | Non-hazardous area | Hazardous area |
|---|---|---|
| Without mounted transmitter | −40 to +85 °C (−40 to +185 °F) | −40 to +60 °C (−40 to +140 °F) |
| With mounted head transmitter | −40 to +85 °C (−40 to +185 °F) | Depends on the relevant hazardous area approval. Details see Ex documentation. |

**Storage temperature**

| Junction box | |
|---|---|
| With head transmitter | −40 to +95 °C (−40 to +203 °F) |

**Relative humidity**

Condensation according to IEC 60068-2-14:
Head transmitter: Permitted

Maximum relative humidity: 95% according to IEC 60068-2-30

**Climate class**

Determined when the following components are installed into the junction box:
- Head transmitter: Class C1 according to EN 60654-1
- Terminal blocks: Class B2 according to EN 60654-1

**Degree of protection**

- Specification for conduit: IP68
- Specification for the junction box: IP66/67

**Vibration-resistance and shock-resistance**

- RTD: 3g / 10 to 500 Hz according to IEC 60751
- RTD iTHERM StrongSens Pt100 (TF, vibration resistant): Up to 60g
- TC: 4g / 2 to 150 Hz according to IEC 60068-2-6

**Electromagnetic compatibility (EMC)**

Depends on the transmitter used. For detailed information see the related Technical Information.

# Process

**Agriculture:**

To select the appropriate product configuration, the forces acting during loading and unloading as well as the connection to the tank or silo must be known. If a special configuration is required, additional data such as the type of stored material, vessel geometry and connection type are essential for the complete product specification.

**Petrochemicals, oil & gas:**

To select the appropriate product configuration, process temperature and process pressure must be specified as parameters. If special product features are requested, additional data such as process fluid type, phases, concentration, viscosity, flow, turbulences and corrosion rate are required for the complete product specification.

**Process temperature range**

0 to +100 °C (+32 to +212 °F).

**Process pressure range**

Up to 40 bar (580.1 psi)

The maximum required process pressure must also be achievable at the maximum permissible process temperature. The maximum operating conditions are defined by the specific pressure ratings of the process connections (e.g. compression fittings and flanges).

**Applications:**

- Storage of hydrocarbons
- LPG/LNG
- Liquid nitrogen
- Storage of organic bulk materials (grain, corn, etc.)
- Grain silos
- Storage tanks for liquid bulk materials
- Beverage processing

# Mechanical construction

**Design, dimensions**

The complete rope assembly consists of several components. The articulated connection of the rope ensures that the rope system has sufficient freedom of movement during filling and emptying.. This design ensures that the rope is exposed to only minor mechanical stress, even when lateral forces act on it (no additional tensioning required). For this reason, a lateral deflection of 3 m (9.84 ft) per 10 m (32.81 ft) rope length is recommended. The connection between the temperature sensors and the extension cable is achieved using compression fittings, ensuring the specified degree of protection.

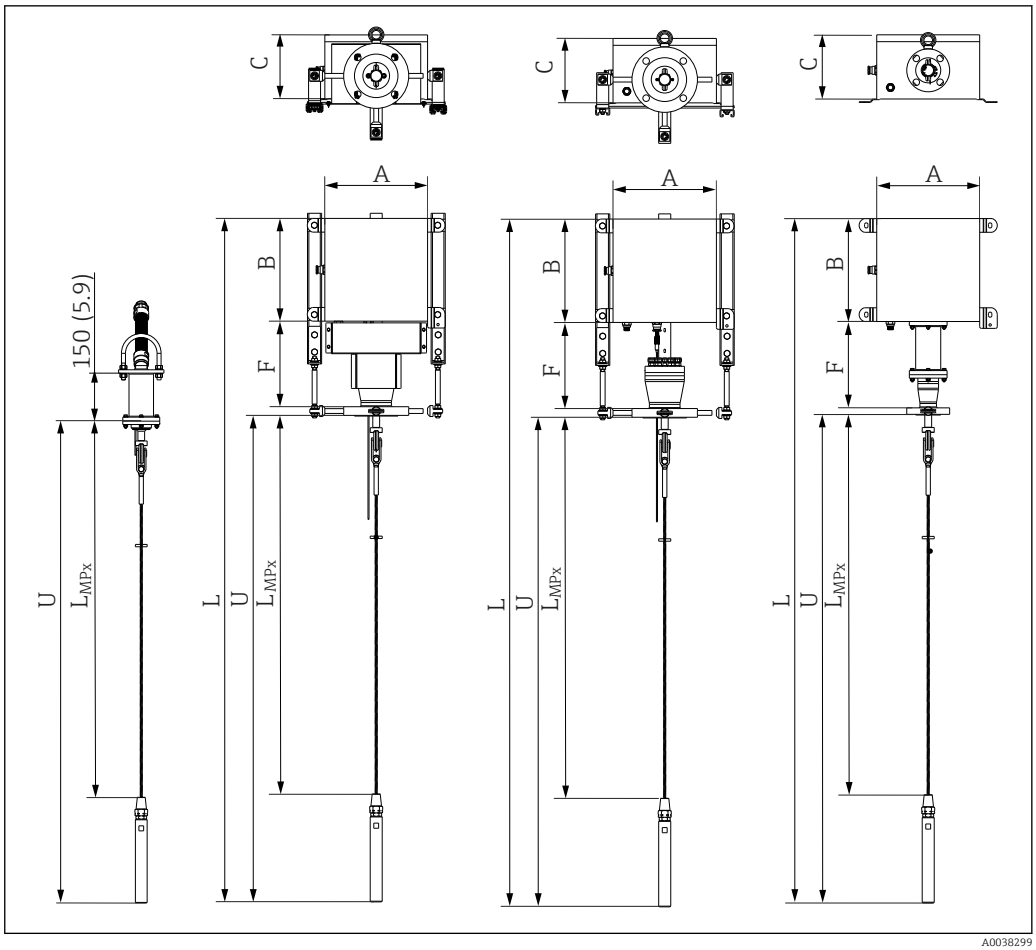


11 *Design of the modular multipoint thermometer: with roof hook (left), with mounting frame (center; with cover or open), and with extension neck (right). All dimensions in mm (in)*

*A, B, Dimensions of the junction box; see following figure.*
*C*
*MPx Numbers and distribution of measuring points: MP1, MP2, MP3 etc.*
*$L_{MPx}$ Immersion length of measuring elements or thermowells*
*F Neck extension length*
*L Device length*
*U Immersion length*

| Neck extension F in mm (in) |
| --- |
| Standard 250 (9.84)<br>Specifically customized neck extensions are available on request. |

| Immersion lengths MPx of measuring elements/thermowells: |
| --- |
| Based on customer requirements |

| Rope maximum load: | | | | | |
|---|---|---|---|---|---|
| | Rope<br>Ø mm | Construction | Weight<br>kg/m | MBL | |
| | | | | kN | kg |
| 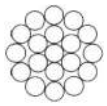<br>A0038300<br>▪ Stainless steel AISI 316<br>▪ Rope according to EN 10264-4<br>▪ Rope grade 1.570 N/mm2 | 6 | 1x19 | 0.1786 | 29.5 | 3000 |
| | 8 | 1x19 | 0.322 | 53 | 5400 |
| | 10 | 1x19 | 0.502 | 84 | 8500 |

### Junction box (directly mounted)

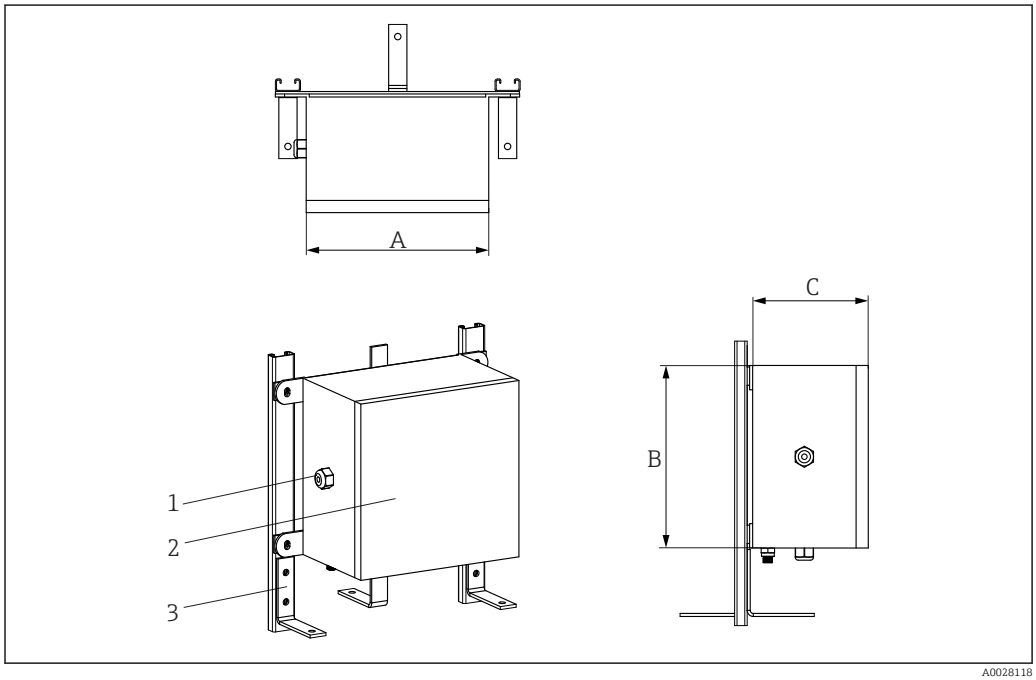


A0028118

*1 Cable glands*
*2 Junction box*
*3 Frame*

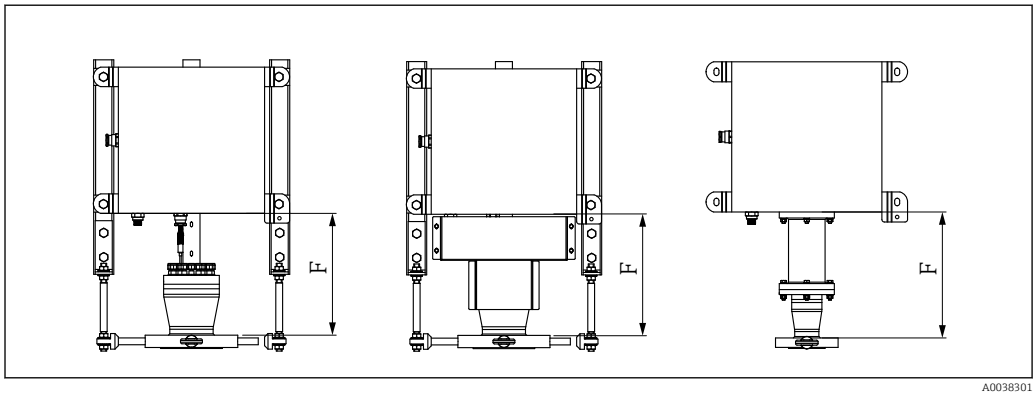


A0038301

*12 Design with open support frame (left), design with support frame with cover (center) and design with neck extension (right)*

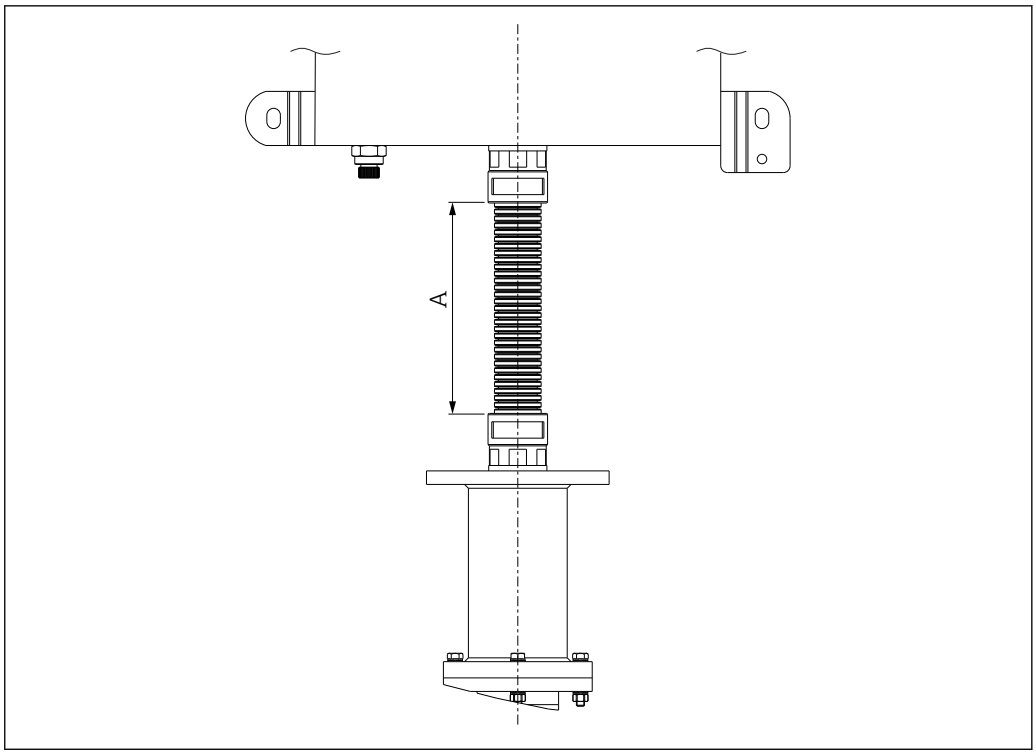


13 *Remote junction box, flexible conduit cable length A*

The connection box is suitable for environments where chemical substances are used. Resistance to seawater corrosion and to extreme temperature variation stability is ensured. Ex-e Ex-i connections can be installed.

*Possible junction box dimensions (A x B x C) in mm (in):*

| | | A | B | C |
|---|---|---|---|---|
| **Stainless steel** | Min. | 260 (10.3) | 260 (10.3) | 200 (7.9) |
| | Max. | 590 (23.2) | 450 (17.7) | 215 (8.5) |
| **Aluminum** | Min. | 203 (8.0) | 203 (8.0) | 130 (5.1) |
| | Max. | 650 (25.6) | 650 (25.6) | 270 (10.6) |

| Type of specification | Junction box | Cable glands |
|---|---|---|
| Material | AISI 316/aluminum | NiCr plated brass<br>AISI 316/316L |
| Degree of protection (IP) | IP66/67 | IP66 |
| Ambient temperature range | −50 to +60 °C<br>(−58 to +140 °F) | −52 to +110 °C (−61.1 to +140 °F) |
| Approvals | ATEX, UL, CSA approval for use in hazardous area<br>IEC | - |
| Marking | ▪ ATEX II 2 GD Ex e IIC /Ex ia Ga IIC Ex tb IIIC Db T6/T5/T4<br>▪ UL913 Class I, Division 1 Groups B, C, D T6/T5/T4<br>▪ CSA C22.2 No. 157 Class 1, Division 1 Groups B, C, D T6/T5/T4 | - |

| Type of specification | Junction box | Cable glands |
|---|---|---|
| Cover | - | - |
| Maximum sealing diameter | - | 6 to 12 mm (0.24 to 0.47 in) |

| | | On board | Remote |
|---|---|---|---|
| Type of protection | Intrinsically safe and increased safety | ▪ With frame<br>▪ Neck extension | Flexible conduit |
| | Flameproof | With supporting frame | |

### Neck extension

The neck extension provides the connection between the flange and the junction box. The design was developed to accommodate different installation options and to address potential obstacles and restrictions that are present in all plants. This includes the infrastructure of storage tanks (platforms, load-bearing structures, stairways, etc.) as well as any existing thermal insulation. The neck extension provides a rigid connection for the junction box and is resistant to vibration.

## Weight

The weight may vary depending on the configuration and is determined by the dimensions and contents of the junction box, neck extension length, dimensions of the process connection, the number of temperature sensors and the weight at the end of the rope. Approximate weight of a typically configured multipoint rope (number of sensors = 12, flange size = 3", medium size junction box) = 55 kg (121 lb)

## Materials

Refers to the sheath, neck extension, junction box, and all parts in contact with the medium.

The temperatures for continuous operation specified in the following table are only intended as reference values for use of the various materials in air and under negligible compressive load. The

maximum operating temperatures may be significantly reduced in some cases where abnormal conditions such as high mechanical load or aggressive media are present.

| Material name | Short form | Recommended max. continuous operating temperature in air | Properties |
|---|---|---|---|
| AISI 316/1.4401 | X5CrNiMo 17-12-2 | 650 °C (1 202 °F) | ▪ Austenitic, stainless steel<br>▪ High corrosion resistance in general<br>▪ Particularly high corrosion resistance in chlorine-based and acidic, non-oxidizing atmospheres through the addition of molybdenum (e.g. phosphoric and sulfuric acids, acetic and tartaric acids with a low concentration) |
| AISI 316L/ 1.4404 1.4435 | X2CrNiMo17-12-2 X2CrNiMo18-14-3 | 650 °C (1 202 °F) | ▪ Austenitic, stainless steel<br>▪ High corrosion resistance in general<br>▪ Particularly high corrosion resistance in chlorine-based and acidic, non-oxidizing atmospheres through the addition of molybdenum (e.g. phosphoric and sulfuric acids, acetic and tartaric acids with a low concentration)<br>▪ Increased resistance to intergranular corrosion and pitting<br>▪ Compared to 1.4404, 1.4435 has even higher corrosion resistance and a lower delta ferrite content |
| AISI 316Ti/ 1.4571 | X6CrNiMoTi17-12-2 | 700 °C (1 292 °F) | ▪ Addition of titanium means increased resistance to intergranular corrosion even after welding<br>▪ Broad range of uses in the chemical, petrochemical and oil industries as well as in coal chemistry<br>▪ Can only be polished to a limited extent, titanium streaks can form |

**Process connection**

The flanges are supplied in stainless steel AISI 316L with material number 1.4404 or 1.4435. Materials 1.4404 and 1.4435 are classified according to their strength and temperature properties in DIN EN 1092-1, Table 18 under 13E0, and in JIS B2220:2004, Table 5 under 023b. The ASME flanges are classified in ASME B16.5-2013, Table 2-2.2. Inches are converted into metric units (in - mm) using the factor 25.4. In the ASME standard, the metric data is rounded to 0 or 5.

Versions
- EN flanges: European standard DIN EN 1092-1:2002-06 and 2007
- ASME flanges: American Society of Mechanical Engineers ASME B16.5-2013

*Geometry of sealing surfaces*

| Flanges | Sealing surface | DIN 2526 [1] | | DIN EN 1092-1 | | | ASME B16.5 | |
|---|---|---|---|---|---|---|---|---|
| | | Form | Rz (µm) | Form | Rz (µm) | Ra (µm) | Form | Ra (µm) |
| without raised face | 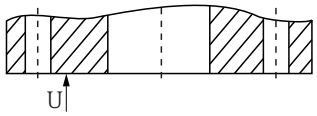 | A<br>B | -<br>40 to 160 | A [2] | 12.5 to 50 | 3.2 to 12.5 | Flat face (FF) | 3.2 to 6.3 (AARH 125 to 250 µin) |
| with raised face | 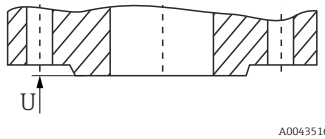 | C<br>D<br>E | 40 to 160<br>40<br>16 | B1 [3]<br><br>B2 | 12.5 to 50<br><br>3.2 to 12.5 | 3.2 to 12.5<br><br>0.8 to 3.2 | Raised face (RF) | |

| Flanges | Sealing surface | DIN 2526 [1] | | DIN EN 1092-1 | | | ASME B16.5 | |
|---|---|---|---|---|---|---|---|---|
| | | Form | Rz (µm) | Form | Rz (µm) | Ra (µm) | Form | Ra (µm) |
| Spring | 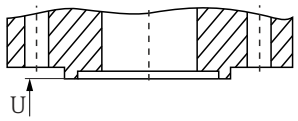 A0043517 | F | - | C | 3.2 to 12.5 | 0.8 to 3.2 | Tongue (T) | 3.2 |
| Groove | 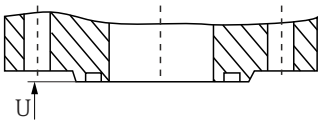 A0043518 | N | | D | | | Groove (G) | |
| Projection | 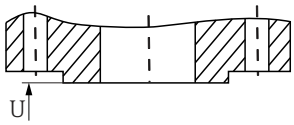 A0043519 | V 13 | - | E | 12.5 to 50 | 3.2 to 12.5 | Male (M) | 3.2 |
| Recess | 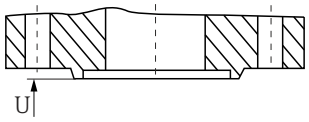 A0043520 | R 13 | | F | | | Female (F) | |
| Projection | 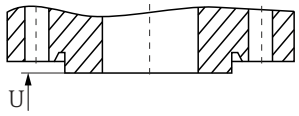 A0043521 | V 14 | for O-rings | H | 3.2 to 12.5 | 3.2 to 12.5 | - | - |
| Recess | 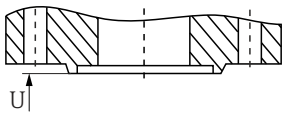 A0043522 | R 14 | | G | | | - | - |
| With ring-type joint | 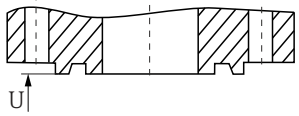 A0052680 | - | - | - | - | - | Ring-type joint (RTJ) | 1.6 |

1) Contained in DIN 2527
2) Typically PN2.5 to PN40
3) Typically from PN63

Flanges according to the old DIN standard are compatible with the new DIN EN 1092-1 standard.
Change in pressure ratings: Old DIN standards PN64 → DIN EN 1092-1 PN63.

*Height of raised face [1]*

| Standard | Flanges | Height of raised face f | Tolerance |
|---|---|---|---|
| DIN EN 1092-1:2002-06 | all types | 2 (0.08) | 0<br>−1 (−0.04) |
| DIN EN 1092-1:2007 | ≤ DN 32 | | |
| | > DN 32 to DN 250 | 3 (0.12) | 0<br>−2 (−0.08) |
| | > DN 250 to DN 500 | 4 (0.16) | 0<br>−3 (−0.12) |
| | > DN 500 | 5 (0.19) | 0<br>−4 (−0.16) |
| ASME B16.5 - 2013 | ≤ Class 300 | 1.6 (0.06) | ±0.75 (±0.03) |
| | ≥ Class 600 | 6.4 (0.25) | 0.5 (0.02) |

| Standard | Flanges | Height of raised face f | Tolerance |
|---|---|---|---|
| JIS B2220:2004 | < DN 20 | 1.5 (0.06)<br>0 | - |
| | > DN 20 to DN 50 | 2 (0.08)<br>0 | |
| | > DN 50 | 3 (0.12)<br>0 | |

1) Dimensions in mm (in)

EN flanges (DIN EN 1092-1)

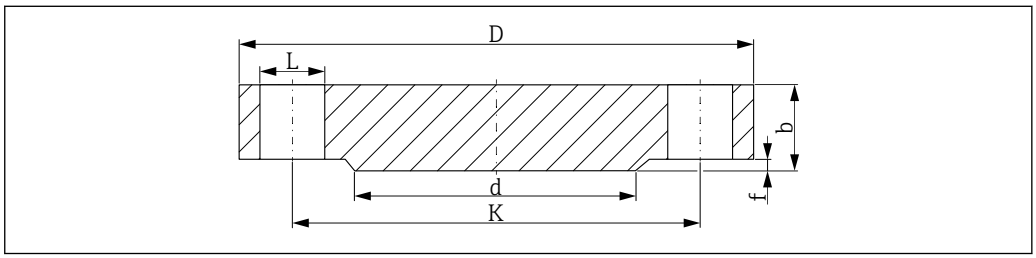


14 *Raised face B1*

*L Bore diameter*
*d Diameter of raised face*
*K Diameter of pitch circle*
*D Flange diameter*
*b Total flange thickness*
*f Height of raised face (generally 2 mm (0.08 in)*

*PN16* [1)]

| DN | D | b | K | d | L | approx. kg (lbs) |
|---|---|---|---|---|---|---|
| 25 | 115 (4.53) | 18 (0.71) | 85 (3.35) | 68 (2.68) | 4xØ14 (0.55) | 1.50 (3.31) |
| 32 | 140 (5.51) | 18 (0.71) | 100 (3.94) | 78 (3.07) | 4xØ18 (0.71) | 2.00 (4.41) |
| 40 | 150 (5.91) | 18 (0.71) | 110 (4.33) | 88 (3.46) | 4xØ18 (0.71) | 2.50 (5.51) |
| 50 | 165 (6.5) | 18 (0.71) | 125 (4.92) | 102 (4.02) | 4xØ18 (0.71) | 2.90 (6.39) |
| 65 | 185 (7.28) | 18 (0.71) | 145 (5.71) | 122 (4.80) | 8xØ18 (0.71) | 3.50 (7.72) |
| 80 | 200 (7.87) | 20 (0.79) | 160 (6.30) | 138 (5.43) | 8xØ18 (0.71) | 4.50 (9.92) |
| 100 | 220 (8.66) | 20 (0.79) | 180 (7.09) | 158 (6.22) | 8xØ18 (0.71) | 5.50 (12.13) |
| 125 | 250 (9.84) | 22 (0.87) | 210 (8.27) | 188 (7.40) | 8xØ18 (0.71) | 8.00 (17.64) |
| 150 | 285 (11.2) | 22 (0.87) | 240 (9.45) | 212 (8.35) | 8xØ22 (0.87) | 10.5 (23.15) |
| 200 | 340 (13.4) | 24 (0.94) | 295 (11.6) | 268 (10.6) | 12xØ22 (0.87) | 16.5 (36.38) |
| 250 | 405 (15.9) | 26 (1.02) | 355 (14.0) | 320 (12.6) | 12xØ26 (1.02) | 25.0 (55.13) |
| 300 | 460 (18.1) | 28 (1.10) | 410 (16.1) | 378 (14.9) | 12xØ26 (1.02) | 35.0 (77.18) |

1) The dimensions in the following tables are in mm (in), unless otherwise specified

*PN40*

| DN | D | b | K | d | L | approx. kg (lbs) |
|---|---|---|---|---|---|---|
| 15 | 95 (3.74) | 16 (0.55) | 65 (2.56) | 45 (1.77) | 4xØ14 (0.55) | 0.81 (1.8) |
| 25 | 115 (4.53) | 18 (0.71) | 85 (3.35) | 68 (2.68) | 4xØ14 (0.55) | 1.50 (3.31) |
| 32 | 140 (5.51) | 18 (0.71) | 100 (3.94) | 78 (3.07) | 4xØ18 (0.71) | 2.00 (4.41) |

| DN | D | b | K | d | L | approx. kg (lbs) |
|---|---|---|---|---|---|---|
| 40 | 150 (5.91) | 18 (0.71) | 110 (4.33) | 88 (3.46) | 4xØ18 (0.71) | 2.50 (5.51) |
| 50 | 165 (6.5) | 20 (0.79) | 125 (4.92) | 102 (4.02) | 4xØ18 (0.71) | 3.00 (6.62) |
| 65 | 185 (7.28) | 22 (0.87) | 145 (5.71) | 122 (4.80) | 8xØ18 (0.71) | 4.50 (9.92) |
| 80 | 200 (7.87) | 24 (0.94) | 160 (6.30) | 138 (5.43) | 8xØ18 (0.71) | 5.50 (12.13) |
| 100 | 235 (9.25) | 24 (0.94) | 190 (7.48) | 162 (6.38) | 8xØ22 (0.87) | 7.50 (16.54) |
| 125 | 270 (10.6) | 26 (1.02) | 220 (8.66) | 188 (7.40) | 8xØ26 (1.02) | 11.0 (24.26) |
| 150 | 300 (11.8) | 28 (1.10) | 250 (9.84) | 218 (8.58) | 8xØ26 (1.02) | 14.5 (31.97) |
| 200 | 375 (14.8) | 36 (1.42) | 320 (12.6) | 285 (11.2) | 12xØ30 (1.18) | 29.0 (63.95) |
| 250 | 450 (17.7) | 38 (1.50) | 385 (15.2) | 345 (13.6) | 12xØ33 (1.30) | 44.5 (98.12) |
| 300 | 515 (20.3) | 42 (1.65) | 450 (17.7) | 410 (16.1) | 16xØ33 (1.30) | 64.0 (141.1) |

ASME flanges (ASME B16.5-2013)

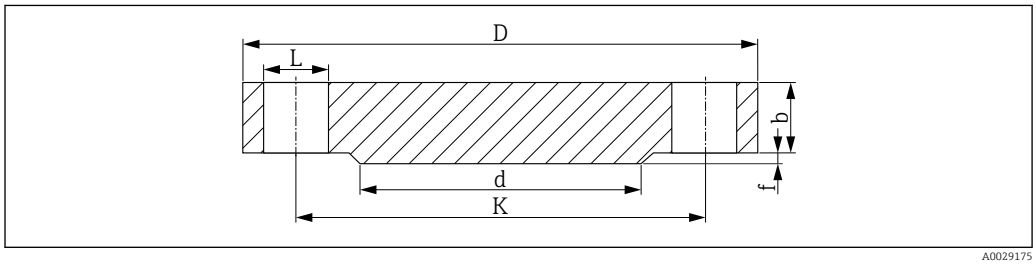


*15 Raised face RF*

*L Bore diameter*
*d Diameter of raised face*
*K Diameter of pitch circle*
*D Flange diameter*
*b Total flange thickness*
*f Height of raised face, Class 150/300: 1.6 mm (0.06 in) or from Class 600: 6.4 mm (0.25 in)*

Surface quality of sealing surface Ra ≤ 3.2 to 6.3 µm (126 to 248 µin).

*Class 150* [1)]

| DN | D | b | K | d | L | approx. kg (lbs) |
|---|---|---|---|---|---|---|
| 1" | 108.0 (4.25) | 14.2 (0.56) | 79.2 (3.12) | 50.8 (2.00) | 4xØ15.7 (0.62) | 0.86 (1.9) |
| 1¼" | 117.3 (4.62) | 15.7 (0.62) | 88.9 (3.50) | 63.5 (2.50) | 4xØ15.7 (0.62) | 1.17 (2.58) |
| 1½" | 127.0 (5.00) | 17.5 (0.69) | 98.6 (3.88) | 73.2 (2.88) | 4xØ15.7 (0.62) | 1.53 (3.37) |
| 2" | 152.4 (6.00) | 19.1 (0.75) | 120.7 (4.75) | 91.9 (3.62) | 4xØ19.1 (0.75) | 2.42 (5.34) |
| 2½" | 177.8 (7.00) | 22.4 (0.88) | 139.7 (5.50) | 104.6 (4.12) | 4xØ19.1 (0.75) | 3.94 (8.69) |
| 3" | 190.5 (7.50) | 23.9 (0.94) | 152.4 (6.00) | 127.0 (5.00) | 4xØ19.1 (0.75) | 4.93 (10.87) |
| 3½" | 215.9 (8.50) | 23.9 (0.94) | 177.8 (7.00) | 139.7 (5.50) | 8xØ19.1 (0.75) | 6.17 (13.60) |
| 4" | 228.6 (9.00) | 23.9 (0.94) | 190.5 (7.50) | 157.2 (6.19) | 8xØ19.1 (0.75) | 7.00 (15.44) |
| 5" | 254.0 (10.0) | 23.9 (0.94) | 215.9 (8.50) | 185.7 (7.31) | 8xØ22.4 (0.88) | 8.63 (19.03) |
| 6" | 279.4 (11.0) | 25.4 (1.00) | 241.3 (9.50) | 215.9 (8.50) | 8xØ22.4 (0.88) | 11.3 (24.92) |
| 8" | 342.9 (13.5) | 28.4 (1.12) | 298.5 (11.8) | 269.7 (10.6) | 8xØ22.4 (0.88) | 19.6 (43.22) |
| 10" | 406.4 (16.0) | 30.2 (1.19) | 362.0 (14.3) | 323.8 (12.7) | 12xØ25.4 (1.00) | 28.8 (63.50) |

1) The dimensions in the following tables are in mm (in), unless otherwise specified.

*Class 300*

| DN | D | b | K | d | L | approx. kg (lbs) |
|---|---|---|---|---|---|---|
| 1" | 124.0 (4.88) | 17.5 (0.69) | 88.9 (3.50) | 50.8 (2.00) | 4xØ19.1 (0.75) | 1.39 (3.06) |
| 1¼" | 133.4 (5.25) | 19.1 (0.75) | 98.6 (3.88) | 63.5 (2.50) | 4xØ19.1 (0.75) | 1.79 (3.95) |
| 1½" | 155.4 (6.12) | 20.6 (0.81) | 114.3 (4.50) | 73.2 (2.88) | 4xØ22.4 (0.88) | 2.66 (5.87) |
| 2" | 165.1 (6.50) | 22.4 (0.88) | 127.0 (5.00) | 91.9 (3.62) | 8xØ19.1 (0.75) | 3.18 (7.01) |
| 2½" | 190.5 (7.50) | 25.4 (1.00) | 149.4 (5.88) | 104.6 (4.12) | 8xØ22.4 (0.88) | 4.85 (10.69) |
| 3" | 209.5 (8.25) | 28.4 (1.12) | 168.1 (6.62) | 127.0 (5.00) | 8xØ22.4 (0.88) | 6.81 (15.02) |
| 3½" | 228.6 (9.00) | 30.2 (1.19) | 184.2 (7.25) | 139.7 (5.50) | 8xØ22.4 (0.88) | 8.71 (19.21) |
| 4" | 254.0 (10.0) | 31.8 (1.25) | 200.2 (7.88) | 157.2 (6.19) | 8xØ22.4 (0.88) | 11.5 (25.36) |
| 5" | 279.4 (11.0) | 35.1 (1.38) | 235.0 (9.25) | 185.7 (7.31) | 8xØ22.4 (0.88) | 15.6 (34.4) |
| 6" | 317.5 (12.5) | 36.6 (1.44) | 269.7 (10.6) | 215.9 (8.50) | 12xØ22.4 (0.88) | 20.9 (46.08) |
| 8" | 381.0 (15.0) | 41.1 (1.62) | 330.2 (13.0) | 269.7 (10.6) | 12xØ25.4 (1.00) | 34.3 (75.63) |
| 10" | 444.5 (17.5) | 47.8 (1.88) | 387.4 (15.3) | 323.8 (12.7) | 16xØ28.4 (1.12) | 53.3 (117.5) |

## Operability

For details of operability, see the Technical Information of the Endress+Hauser temperature transmitters or the manuals of the related operating software.

## Certificates and approvals

Current certificates and approvals for the product are available at www.endress.com on the relevant product page:

1. Select the product using the filters and search field.
2. Open the product page.
3. Select **Downloads**.

**Ordering information**

Detailed ordering information is available from your nearest sales organization www.addresses.endress.com or in the Product Configurator at www.endress.com:

1. Select the product using the filters and search field.
2. Open the product page.
3. Select **Configuration**.

**Product Configurator - the tool for individual product configuration**

- Up-to-the-minute configuration data
- Depending on the device: direct input of information specific to the measuring point, such as the measuring range or operating language
- Automatic verification of exclusion criteria
- Automatic creation of the order code and its breakdown in PDF or Excel output format
- Ability to order directly in the Endress+Hauser Online Shop

# Accessories

The accessories currently available for the product can be selected at www.endress.com:

1. Select the product using the filters and search field.
2. Open the product page.
3. Select **Spare parts & Accessories**.

## Device-specific accessories

| Accessories | Description |
|---|---|
| Anchor weight<br>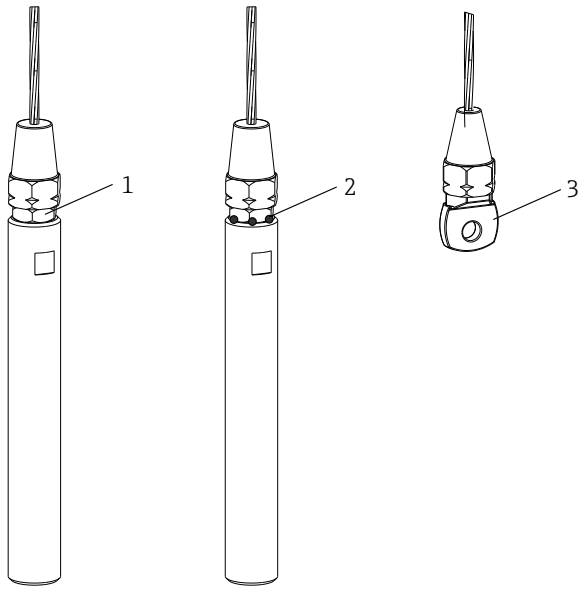<br> | Installing an anchor weight ensures that the rope is positioned vertically and runs straight. Ensure that there is sufficient space in the storage tank to position the weight correctly. The dimensions are specified during ordering according to the dimensions of the multipoint cable.<br>▪ 1: Removable/replaceable via thread connection<br>▪ 2: Permanently attached by spot welding<br>▪ 3: Not applicable |
| Positioning guides<br>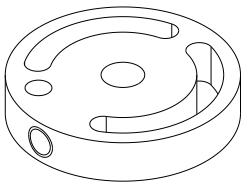<br> | The multipoint rope is equipped with positioning guides. They ensure that the sensor element is correctly positioned along the entire length of the cable and remains in position under operating conditions. |

| Accessories | Description |
|---|---|
| Swivel clamp<br>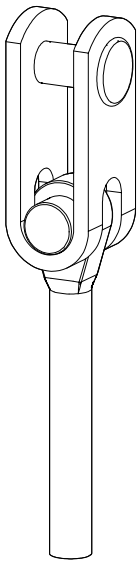<br>A0038306 | Joint connection between the rope and the flange to allow relative rotation. |
| 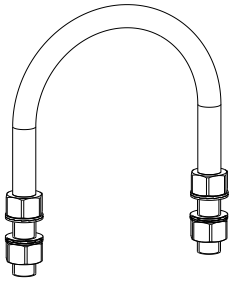<br>A0055454 | Tool for suspending the multipoint probe inside silos or any other supporting structures. |

## Communication-specific accessories

### Netilion

With the Netilion IIoT ecosystem, Endress+Hauser enables the optimization of plant performance, digitization of workflows, sharing of knowledge and improved collaboration. Drawing upon decades of experience in process automation, Endress+Hauser offers the process industry an IIoT ecosystem designed to effortlessly extract insights from data. These insights allow process optimization, leading to increased plant availability, efficiency, reliability and ultimately a more profitable plant.

www.netilion.endress.com

### DeviceCare SFE100

DeviceCare is an Endress+Hauser configuration tool for field devices using the following communication protocols: HART, PROFIBUS DP/PA, FOUNDATION Fieldbus, IO/Link, Modbus, CDI and Endress+Hauser Common Data Interfaces.

Technical Information TI01134S

www.endress.com/sfe100

### FieldCare SFE500

FieldCare is a configuration tool for Endress+Hauser and third-party field devices based on DTM technology.
The following communication protocols are supported: HART, WirelessHART, PROFIBUS, FOUNDATION Fieldbus, Modbus, IO-Link, EtherNet/IP, PROFINET and PROFINET APL.

Technical Information TI00028S

www.endress.com/sfe500

## System products

### Data Manager of the RSG product family

Data Managers are flexible and powerful systems to organize process values. Up to 20 universal inputs and up to 14 digital inputs for direct connection of sensors, optionally with HART, are available as an option. The measured process values are clearly presented on the display and logged

safely, monitored for limit values and analyzed. The values can be forwarded via common communication protocols to higher-level systems and connected to one another via individual plant modules.

For more information, please refer to: www.endress.com

**RN series active barrier**

Single- or two-channel active barrier for safe separation of 0/4 to -20 mA standard signal circuits with bidirectional HART transmission. In the signal duplicator option, the input signal is transmitted to two galvanically isolated outputs. The device has one active and one passive current input; the outputs can be operated actively or passively.

For more information, please refer to: www.endress.com

# Documentation

The following document types are available in the Downloads area of the Endress+Hauser website (www.endress.com/downloads), depending on the device version:

| Document type | Purpose and content of the document |
|---|---|
| Technical Information (TI) | **Planning aid for your device**<br>The document contains all the technical data on the device and provides an overview of the accessories and other products that can be ordered for the device. |
| Brief Operating Instructions (KA) | **Guide that takes you quickly to the 1st measured value**<br>The Brief Operating Instructions contain all the essential information from incoming acceptance to initial commissioning. |
| Operating Instructions (BA) | **Your reference document**<br>The Operating Instructions contain all the information that is required in various phases of the life cycle of the device: from product identification, incoming acceptance and storage, to mounting, connection, operation and commissioning through to troubleshooting, maintenance and disposal. |
| Description of Device Parameters (GP) | **Reference for your parameters**<br>The document provides a detailed explanation of each individual parameter. The description is aimed at those who work with the device over the entire life cycle and perform specific configurations. |
| Safety instructions (XA) | Depending on the approval, safety instructions for electrical equipment in hazardous areas are also supplied with the device. These are an integral part of the Operating Instructions.<br>The nameplate indicates which Safety Instructions (XA) apply to the device. |
| Supplementary device-dependent documentation (SD/FY) | Always comply strictly with the instructions in the relevant supplementary documentation. The supplementary documentation is a constituent part of the device documentation. |




www.addresses.endress.com

Endress+Hauser

People for Process Automation