BA00209F/00/EN/14.13
71229230

Valid as of software version
V 01.03.00 (amplifier)
V 01.03.00 (communication)

Operating Instructions
Micropilot S FMR533
Level-Radar

HART COMMUNICATION PROTOCOL

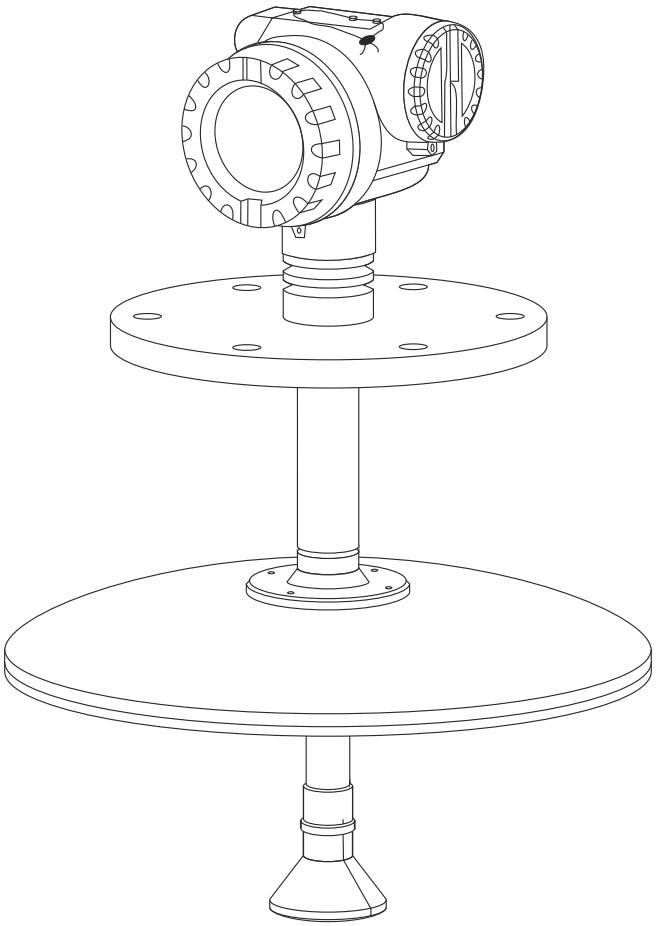

Endress+Hauser
People for Process Automation

Brief operating instructions

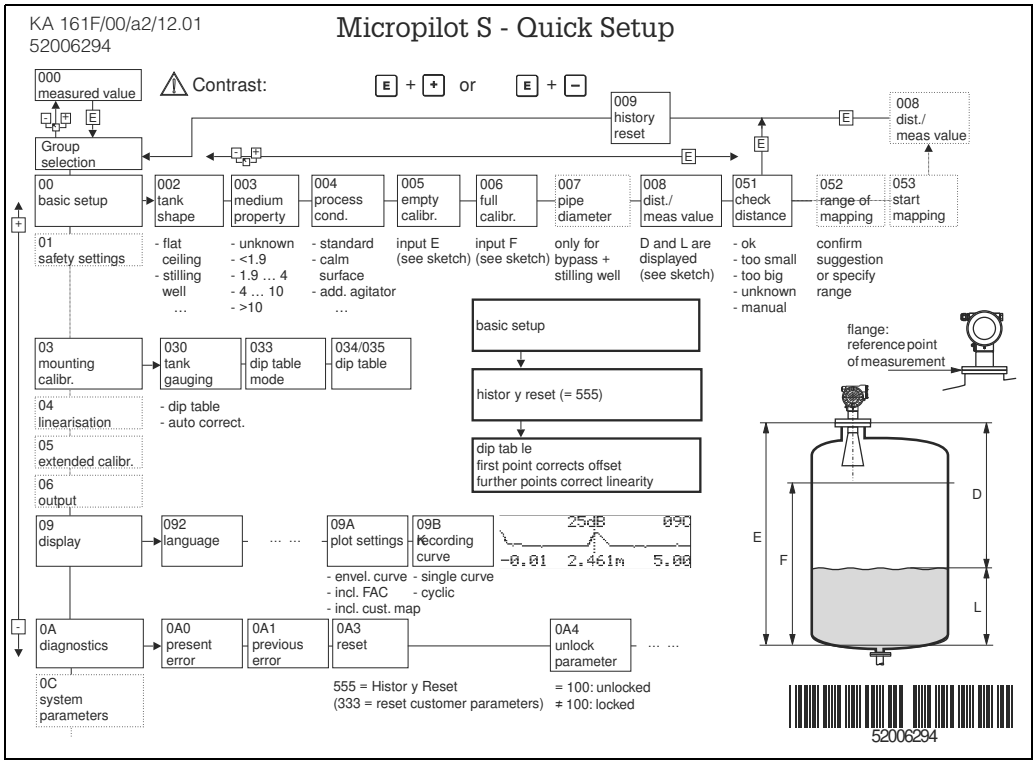

This operating manual explains the installation and initial start-up for the level transmitter. All functions that are required for a typical measuring task are taken into account here. In addition, the Micropilot S provides many other functions that are not included in this operating manual, such as optimising the measuring point and converting the measured values.

An **overview of all device functions** can be found on → 80.

The operating manual BA00217F/00/EN "Description of Instrument Functions" provides an **extensive description of all device functions**, which can be found on the enclosed CD-ROM.

The Operating Instructions can also be found on our homepage: www.endress.com

Table of Contents

1 Safety instructions 4

1.1 Designated use 4
1.2 Installation, commissioning and operation 4
1.3 Operational safety and process safety 4
1.4 Notes on safety conventions and symbols 5

2 Identification 7

2.1 Device designation 7
2.2 Scope of delivery 9
2.3 Certificates and approvals 9
2.4 Registered trademarks 9

3 Mounting 10

3.1 Quick installation guide 10
3.2 Incoming acceptance, transport, storage 10
3.3 Installation Conditions 11
3.4 Installation instructions 16
3.5 Post-installation check 22

4 Wiring 23

4.1 Quick wiring guide 23
4.2 Connecting the measuring unit 25
4.3 Recommended connection 28
4.4 Degree of protection 28
4.5 Post-connection check 28

5 Operation 29

5.1 Quick operation guide 29
5.2 Display and operating elements 31
5.3 Local operation 34
5.4 Display and acknowledging error messages . . . 37
5.5 HART communication 38

6 Commissioning 41

6.1 Function check 41
6.2 Switching on the measuring device 41
6.3 Basic Setup 42
6.4 Basic Setup with the device display VU331 44
6.5 Mounting calibration with device display VU331 52
6.6 Basic Setup with the Endress+Hauser operating program 61
6.7 Mounting calibration with the Endress+Hauser operating program 65

7 Maintenance 67

7.1 Exterior cleaning 67
7.2 Replacing seals 67
7.3 Repair 67
7.4 Repairs to Ex-approved devices 67
7.5 Replacement 67

8 Accessories 68

8.1 Weather protection cover 68
8.2 Commubox FXA195 HART 68
8.3 Commubox FXA291 68
8.4 ToF Adapter FXA291 68
8.5 Field Xpert 68

9 Trouble-shooting 69

9.1 Trouble-shooting instructions 69
9.2 System error messages 70
9.3 Application errors 72
9.4 Orientation of the Micropilot 74
9.5 Spare parts 76
9.6 Return 76
9.7 Disposal 77
9.8 Software history 77
9.9 Contact addresses of Endress+Hauser 77

10 Technical data 78

10.1 Additional technical data 78

11 Appendix 80

11.1 Operating menu HART (Display modul) 80
11.2 Integrated in tank gauging system 82

Index 85

1 Safety instructions

1.1 Designated use

The Micropilot S is a compact radar level transmitter for the continuous, contactless measurement of liquids. The device can also be freely mounted outside closed metal vessels because of its operating frequency of about 6 GHz and a maximum radiated pulsed energy of 1 mW (average power output 1 µW). Operation is completely harmless to humans and animals.

1.2 Installation, commissioning and operation

The Micropilot S has been designed to operate safely in accordance with current technical, safety and EU standards. If installed incorrectly or used for applications for which it is not intended, however, it is possible that application-related dangers may arise, e.g. product overflow due to incorrect installation or calibration. For this reason, the device must be installed, connected, operated and maintained according to the instructions in this manual: personnel must be authorised and suitably qualified. The manual must have been read and understood, and the instructions followed. Modifications and repairs to the device are permissible only when they are expressly approved in the manual.

1.3 Operational safety and process safety

Alternative monitoring measures must be taken to ensure operational safety and process safety during configuration, testing and maintenance work on the device.

1.3.1 Hazardous areas

Measuring systems for use in hazardous environments are accompanied by separate "Ex documentation", which is an integral part of this Operating Manual. Strict compliance with the installation instructions and ratings as stated in this supplementary documentation is mandatory.

- Ensure that all personnel are suitably qualified.
- Observe the specifications in the certificate as well as national and local regulations.

1.3.2 FCC approval

This device complies with part 15 of the FCC Rules. Operation is subject to the following two conditions:

1. This device may not cause harmful interference, and
2. this device must accept any interference received, including interference that may cause undesired operation.

⚠ CAUTION

Changes or modifications not expressly approved by the part responsible for compliance could void the user's authority to operate the equipment.

1.4 Notes on safety conventions and symbols

In order to highlight safety-relevant or alternative operating procedures in the manual, the following conventions have been used, each indicated by a corresponding symbol in the margin.

1.4.1 Safety symbols

Symbol	Meaning
 A0011189-EN	**DANGER!** This symbol alerts you to a dangerous situation. Failure to avoid this situation will result in serious or fatal injury.
 A0011190-EN	**WARNING!** This symbol alerts you to a dangerous situation. Failure to avoid this situation can result in serious or fatal injury.
 A0011191-EN	**CAUTION!** This symbol alerts you to a dangerous situation. Failure to avoid this situation can result in minor or medium injury.
 A0011192-EN	**NOTICE!** This symbol contains information on procedures and other facts which do not result in personal injury.

1.4.2 Electrical symbols

Symbol	Meaning
 A0018339	**Protective ground connection** A terminal which must be connected to ground prior to establishing any other connections.

1.4.3 Tool symbols

Symbol	Meaning
 A0011221	Allen key

1.4.4 Symbols for certain types of information

Symbol	Meaning
 A0011182	**Allowed** Indicates procedures, processes or actions that are allowed.
 A0011184	**Forbidden** Indicates procedures, processes or actions that are forbidden.
 A0011193	**Tip** Indicates additional information.
 A0015484	**Reference to page** Refers to the corresponding page number.
1. , 2. , 3. ,...	Series of steps

1.4.5 Symbols in graphics

Symbol	Meaning
1, 2, 3, 4, ...	Item numbers
1. , 2. , 3. ,...	Series of steps
A, **B**, **C**, **D**, ...	Views

1.4.6 Symbols at the device

Symbol	Meaning
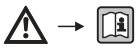 A0019159	**Safety instructions** Observe the safety instructions contained in the associated Operating Instructions.
 A0019221	Temperature resistance of the connection cables Specifies the minimum value of the temperature resistance of the connection cables.

2 Identification

2.1 Device designation

2.1.1 Nameplate

Device nameplate

The following technical data are given on the device nameplate:

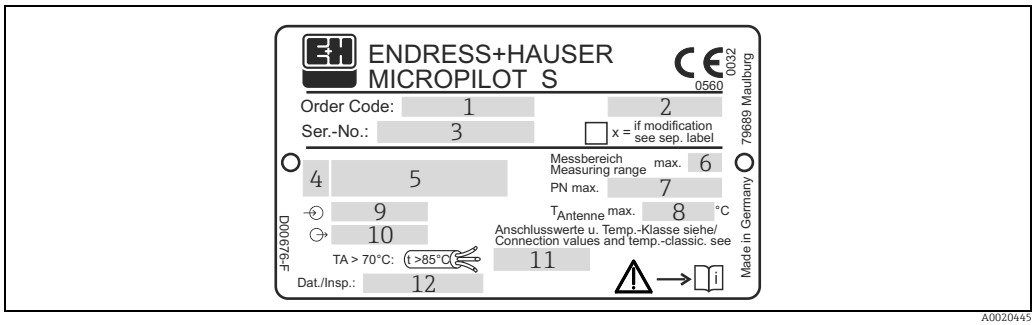

A0020445

1 Order code
2 Degree of protection e.g. IP65, IP67
3 Serial number
4 Certificate symbol (optional) e.g. Ex
5 Approval number and type of protection
6 Max. measuring range
7 Max. permissible pressure in tank
8 Max. permissible temperature on the antenna
9 Power supply
10 Current supply
11 Safety infromation (Connection values and temp.-classific.)
12 Dat.Insp. xx/yy (xx = week of production, yy = year of production)

NMI type plate

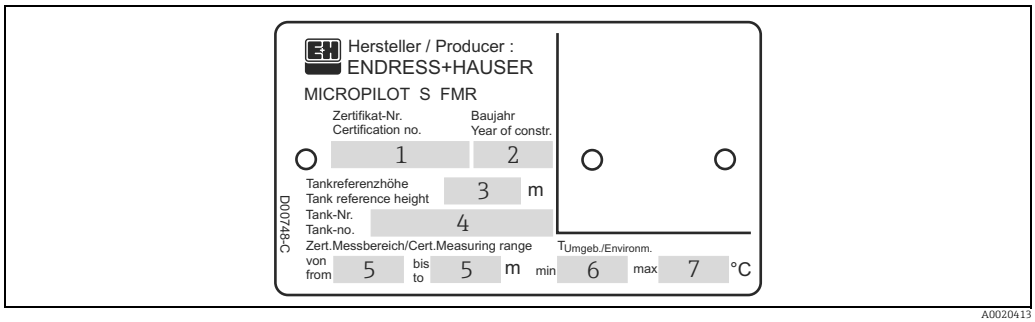

A0020413

Note!
The fields are only filled if in feature "70" "Weight + measures approval" the variant "F" is selected.

1 Certificate number
2 Year of construction
3 Tank reference height
4 Tank number
5 Certificated measuring range from ... to ...
6 Min. environment temperature
7 Max. environment temperature

PTB type plate

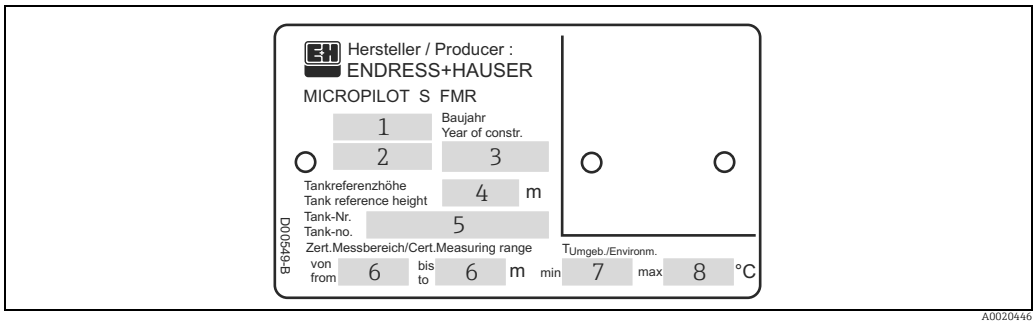

Note!
The fields are only filled if in feature "70" "Weight + measures approval" the variant "G" is selected.

1 Approval number
2 Year and month of type approval
3 Year of construction
4 Tank reference height
5 Tank number
6 Certificated measuring range from ... to ...
7 Min. environment temperature
8 Max. environment temperature

2.2 Scope of delivery

⚠ CAUTION

It is essential to follow the instructions concerning the unpacking, transport and storage of measuring devices given in the chapter "Incoming acceptance, transport, storage", → 10!

The scope of delivery consists of:
- Assembled device
- Accessories (→ 68)
- 2 seals
- Endress+Hauser operating program on the enclosed CD-ROM
- Brief operating instructions KA01058F/00/EN for quick commissioning
- Brief operating instructions KA00161F/00/A2 (basic setup/troubleshooting), housed in the device
- Approval documentation: if this is not included in the operating manual
- CD-ROM with further documentation, e.g.
  - Operating Instructions
  - Description of Instrument Functions

2.3 Certificates and approvals

CE mark, declaration of conformity

The device is designed to meet state-of-the-art safety requirements, has been tested and left the factory in a condition in which it is safe to operate. The device complies with the applicable standards and regulations as listed in the EC declaration of conformity and thus complies with the statutory requirements of the EG directives. Endress+Hauser confirms the successful testing of the device by affixing to it the CE mark.

2.4 Registered trademarks

KALREZ®, VITON®, TEFLON®
Registered trademark of the company, E.I. Du Pont de Nemours & Co., Wilmington, USA

TRI-CLAMP®
Registered trademark of the company, Ladish & Co., Inc., Kenosha, USA

HART®
Registered trademark of HART Communication Foundation, Austin, USA

ToF®
Registered trademark of the company Endress+Hauser GmbH+Co. KG, Maulburg, Germany

PulseMaster®
Registered trademark of the company Endress+Hauser GmbH+Co. KG, Maulburg, Germany

PhaseMaster®
Registered trademark of the company Endress+Hauser GmbH+Co. KG, Maulburg, Germany

FieldCare®
Registered trademark of the Endress+Hauser Process Solutions AG, Reinach, Switzerland

3 Mounting

3.1 Quick installation guide

3.1.1 Installation in tank (free space)

Mark on process connector facing the nearest tank wall!

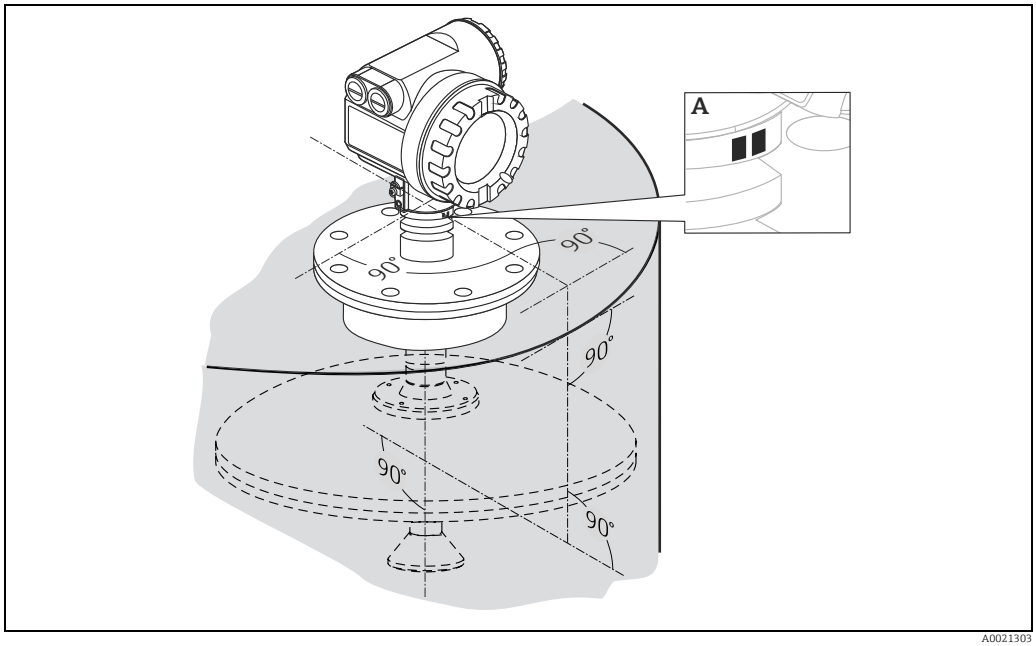

A Marker at flange neck

3.2 Incoming acceptance, transport, storage

3.2.1 Incoming acceptance

Check the packing and contents for any signs of damage. Check the shipment, make sure nothing is missing and that the scope of supply matches your order.

3.2.2 Transport

⚠ CAUTION

Follow the safety instructions and transport conditions for devices of more than 18 kg (39.69 lbs).

3.2.3 Storage

Pack the measuring device so that is protected against impacts for storage and transport. The original packing material provides the optimum protection for this.
The permissible storage temperature is -40 to +80 °C (-40 to +176 °F).

3.3 Installation Conditions

3.3.1 Engineering hints

Orientation

- Recommended distance (1) wall - **outer edge** of nozzle: ~1/6 of tank diameter ("Beam angle", → 12).
- Mount the Micropilot S at a position where the tank movement due to filling/ emptying of the tank is of low influence.
- Not in the centre (3), interference can cause signal loss.
- Not above the fill stream (4).
- It is recommended to use a weather protection cover (2) in order to protect the transmitter from direct sun or rain. Assembly and disassembly is simply done by means of a tension clamp ("Accessories", → 68).

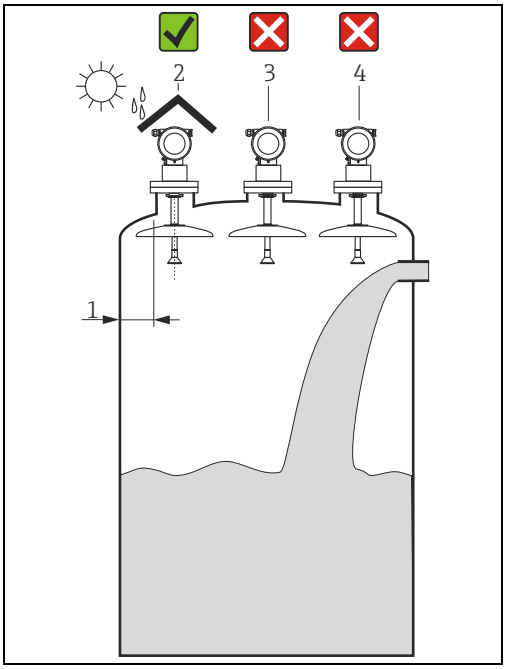

A0020684

Tank installations

- Avoid any installations (1), like limit switches, temperature sensors, etc., inside the signal beam ("Beam angle", → 12).
- It is essential that HiHi alarm is below the blocking distance (BD) and the safety distance (SD).
- Symmetrical installations (2), e.g. vacuum rings, heating coils, baffles, etc., can also interfere with the measurement.

Optimization options

- Antenna size: the bigger the antenna, the smaller the beam angle, the less interference echoes.
- Mapping: the measurement can be optimized by means of electronic suppression of interference echoes.
- Antenna alignment: "**Optimum mounting position**", → 16.
- Stilling well: a stilling well can always be used to avoid interference. The FMR532 with planar antenna is recommended for stilling wells with a diameter DN 150 (6") and larger.

Please contact Endress+Hauser for further information.

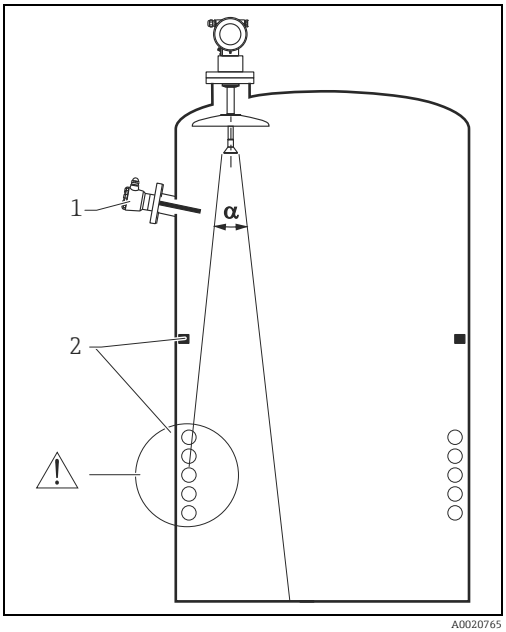

A0020765

Beam angle

The beam angle is defined as the angle α where the energy density of the radar waves reaches half the value of the maximum energy density (3dB-width). Microwaves are also emitted outside the signal beam and can be reflected off interfering installations.
Beamwidth diameter **W** as function of antenna type (beam angle **α**) and measuring distance **D**:

	parabolic
Beam angle α	7°

Gauge Reference Height (GRH)	recommended distance from the tank wall (W/2)
3 m (9.8 ft)	0,2 m (0.7 ft)
6 m (20 ft)	0,4 m (1.3 ft)
9 m (30 t)	0,6 m (2 ft)
12 m (39 ft)	0,7 m (2.3 ft)
15 m (49 ft)	0,9 m (3 ft)
20 m (66 ft)	1,2 m (3.9 ft)
25 m (82 ft)	1,5 m (4.9 ft)
38 m (125 ft)	2,3 m (7.5 ft)
40 m (131 ft)	2,4 m (7.9 ft)

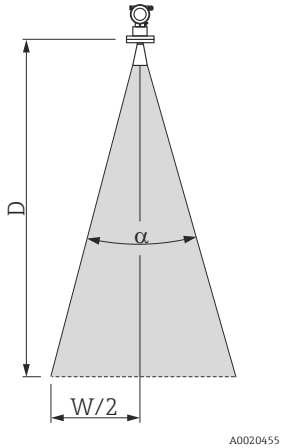

NOTICE

Risk of measurement failure due to false echos!

▶ Make sure that only one tank wall (**not two** tank walls) is directly hit by the radar beam!

Measuring conditions

- The measuring range begins where the beam hits the tank bottom. Particularly with dish bottoms or conical outlets the level cannot be detected below this point.
- For **overfill prevention**, it is possible to define a safety distance **(SD)** additionally to the blocking distance **(BD)**.
- Depending on its consistence, foam can either absorb microwaves or reflect them off the foam surface. Measurement is possible under certain conditions.
- The smallest possible measuring range **B** depends on the antenna version (see Fig.).
- Tank diameter and height should be at least dimensioned such that a reflection of the radar signal on both sides of the tank can be ruled out ("Beam angle", → 12).
- In case of media with a low dielectric constant (groups A and B), the tank bottom can be visible through the medium at low levels (low height **C**). Reduced accuracy has to be expected in this range. If this is not acceptable, we recommend positioning the zero point at a distance **C** (see Fig.) above the tank bottom in these applications.
- In applications with **parabolic antenna**, especially for media with low dielectric constants (media group A and B, → 14), the end of the measuring range should not be closer than 1 m (3.3 ft) to the flange (cf. **BD** in Fig.).
- The safety distance **(SD)** is set to 0,5 m (1.6 ft) by default, generating an alarm in case the product level rises inside the safety distance.

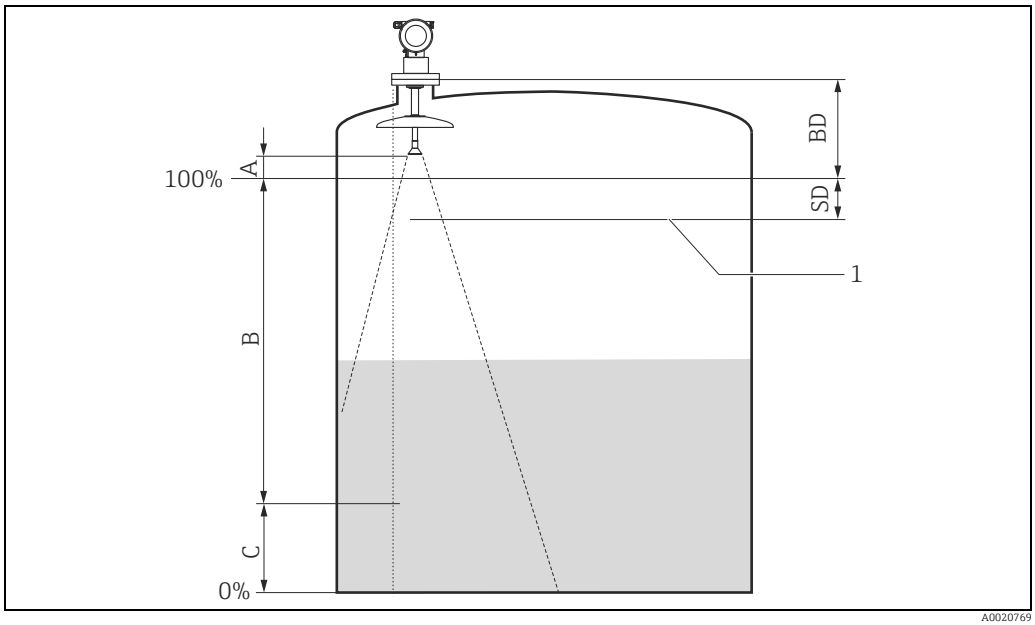

1 Max. level

Reference: flange / BD (cf. picture)		Reference: antenna tip (cf. picture)		
Blocking distance	**Safety distance**	**Recommended additional settings**		
BD [m (ft)]	SD [m (ft)]	A [mm (in)]	B [m (ft)]	C [mm (in)]
1 (3.3)	0,5 (1.6)	1000 (39.4)	0,5 (1.6)	150 to 300 (5.91 to 11.8)

Behaviour if measuring range is exceeded

The behaviour in case of the measuring range being exceeded can be freely set:
The default setting is a current of 22 mA and the generation of a digital warning (E681).

Measuring range

The usable measuring range depends on the size of the antenna, the reflectivity of the medium, the mounting location and eventual interference reflections.
The following tables describe the groups of media as well as the achievable measuring range as a function of application and media group. If the dielectric constant of a medium is unknown, it is recommended to assume media group B to ensure a reliable measurement.

Media group	DC (Ɛr)	Examples
A	1.4 to 1.9	Non-conducting liquids, e.g. liquefied gas (LPG). For more information please contact your Endress+Hauser representative.
B	1.9 to 4	Non-conducting liquids, e.g. benzene, oil, toluene, white products, black products, crudes, bitumen/asphalts, ...
C	4 to 10	E.g. concentrated acids, organic solvents, esters, aniline, alcohol, acetone, ...
D	> 10	Conducting liquids, e.g. aqueous solutions, dilute acids and alkalis

Measuring range depending on product class

Media group		Free space (Storage tank)
		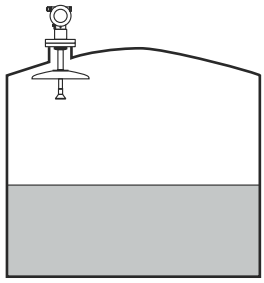
		Measuring range
A	DC (Ɛr) = 1.4 to 1.9	–
B	DC (Ɛr) = 1.9 to 4	40 m (131 ft)
C	DC (Ɛr) = 4 to 10	
D	DC (Ɛr) > 10	
max. measuring range with custody transfer approvals		NMI: 25 m (82 ft) PTB: 30 m (98 ft)

Blocking distance

The blocking distance (= BD) is the minimum distance form the reference point of the measurement (mounting flange) to the medium surface at maximum level.

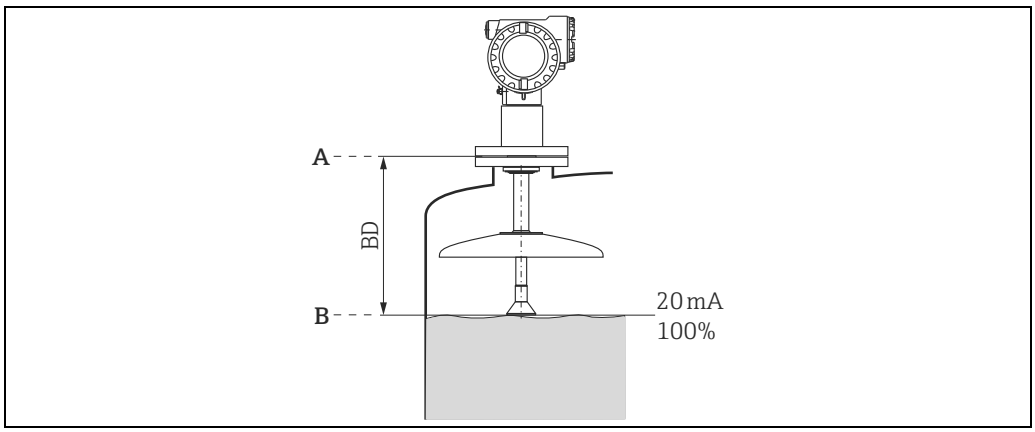

A0020727

Blocking distance (BD)[1]	Free space (Storage tank)
from flange	1 m (3.3 ft) (see chapter "Mechanical construction" in TI01122F/00/EN)

1) 1 mm accuracy under reference conditions

NOTICE

Inside the blocking distance a reliable measurement can not be guaranteed.

3.4 Installation instructions

3.4.1 Mounting kit

For the mounting , you will require the following tool:
- The tool for flange mounting
- 4 mm (0.1") Allen wrench for turning the housing

3.4.2 Installation in tank (free space)

Optimum mounting position

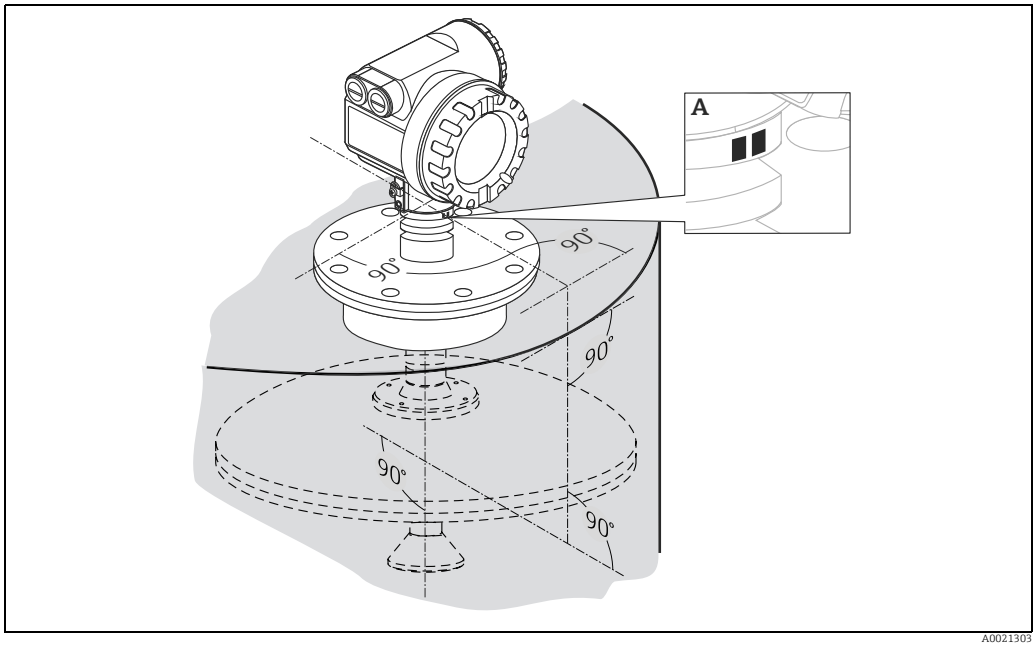

A Marker at flange neck

Standard installation

- Observe installation instructions, → 11
- Marker is aligned towards tank wall.
  The marker is located clearly visible on the sensor neck of the flange.
- After mounting, the housing can be turned 350° in order to simplify access to the display and the terminal compartment.
- The parabolic antenna must extend at least 10 mm (0.39 in) below the nozzle.
- Align parabolic antenna vertically.

Mounting in manway

The parabolic antenna can be mounted on a manway cover.
The manway cover must have an opening with a diameter D1 or D2 for mounting of the antenna (refer to the following fig.). It has to be possible to remove the cover in order to mount the antenna. The device can be mounted on the manway cover with a weld-on flange with a neck. Please consider the maximum height of the nozzle (H max. = 200 mm (7.87 in)) for the diameter of the basis.

Examples for installation in a manway

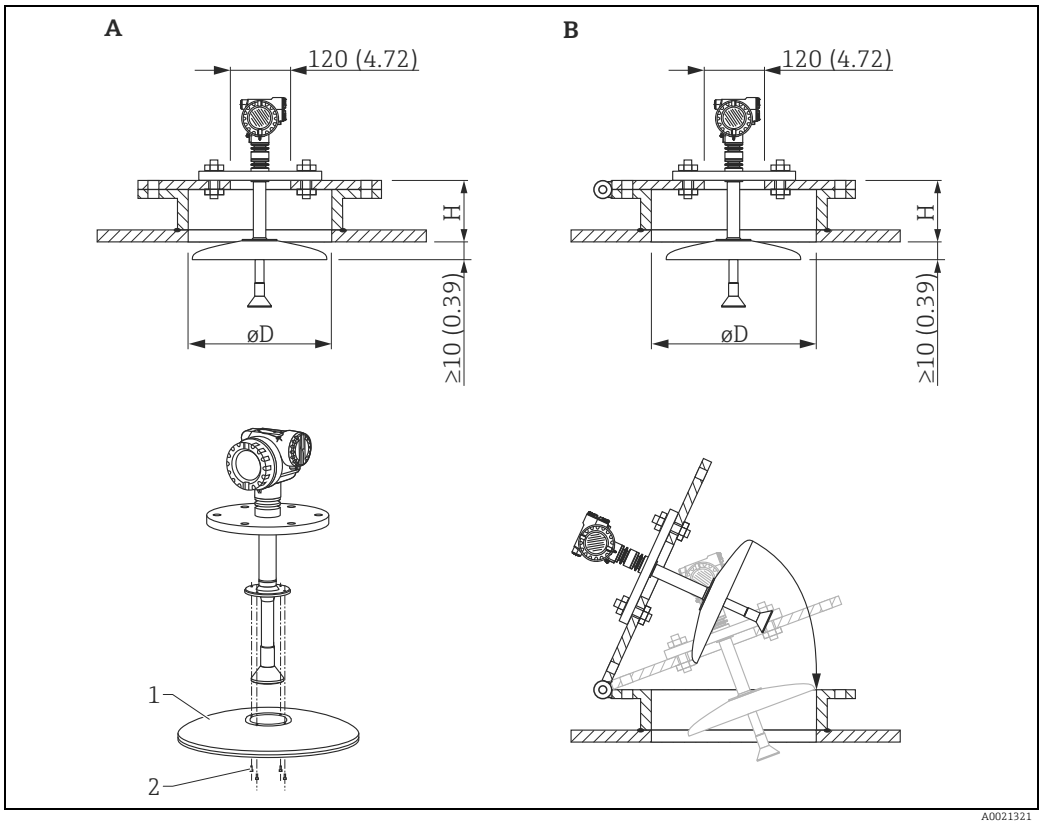

A Standard installation
B Hinged flange
1 For installation in nozzle you can dismantle the parabolic reflector
2 4 bolts

	øD (=inside diameter)	**H max. (=maximum height of nozzle)**
Standard installation	≥ 500 mm (19.7 in)	200 mm (7.87 in)
Hinged flange	≥ 600 mm (23.6 in)	200 mm (7.87 in)

3.4.3 Turn housing

After mounting, the housing can be turned 350° in order to simplify access to the display and the terminal compartment. Proceed as follows to turn the housing to the required position:

1. Undo the allen screw
2. Turn the housing in the required direction
3. Tighten up the allen screw strongly by hand

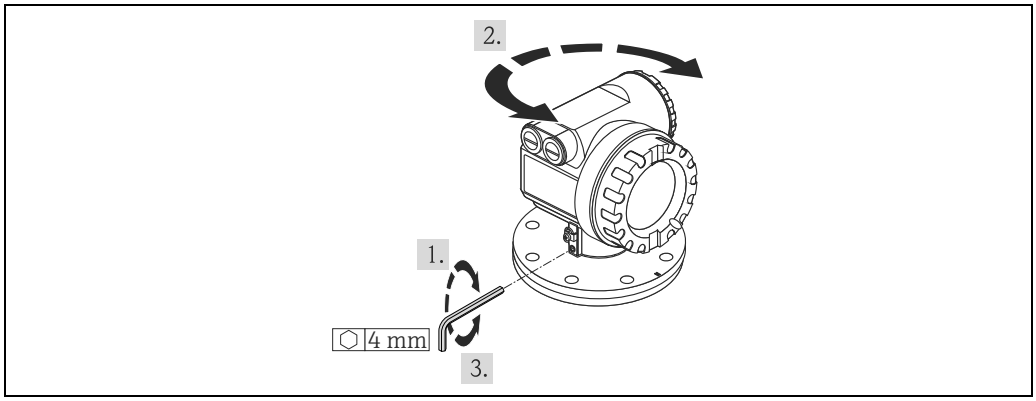

A0020470

3.4.4 Installation with Endress+Hauser UNI flange

Installation hints

Endress+Hauser UNI flanges are designed for non-pressurized operation respectively max. 1 bar absolute pressure. The number of bolts has sometimes been reduced. The bolt-holes have been enlarged for adaption of dimensions, therefore, the flange needs to be properly aligned to the counterflange before the bolts are tightened.

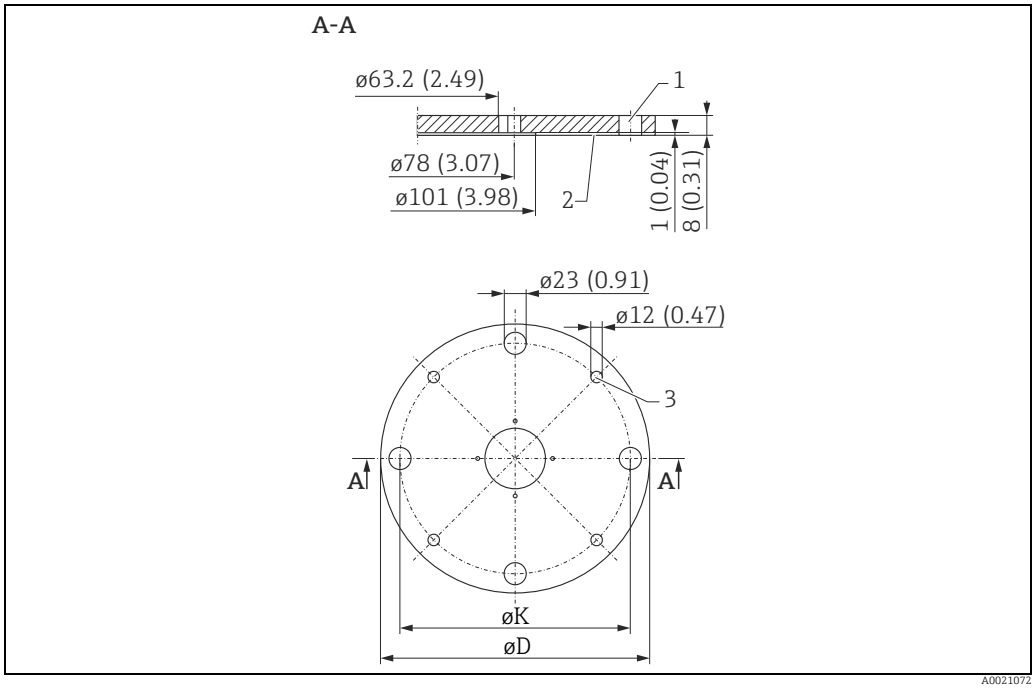

Dimensions: mm (in).

1 4 x ø7 mm (0.28 in) moved 90°
2 Sealing surface
3 For small bolts

Compatible with	øD [mm (in)]	øK [mm (in)]	Type plate	Material
▪ DN150 PN16 ▪ ANSI 6" 150lbs ▪ JIS 10K 150	280 (11)	240 (9.45)	942455-3001	1.4301

Preparation for the installation of the Endress+Hauser UNi flange

The mounting requires the following tools:
- Philips screw driver size 1
- Flat screw driver for M3/M4
- Hexagon key AF2.5/AF4
- Unplug tool for antenna plug (order nr.: 52007646)
- Eventually a pair of tweezers

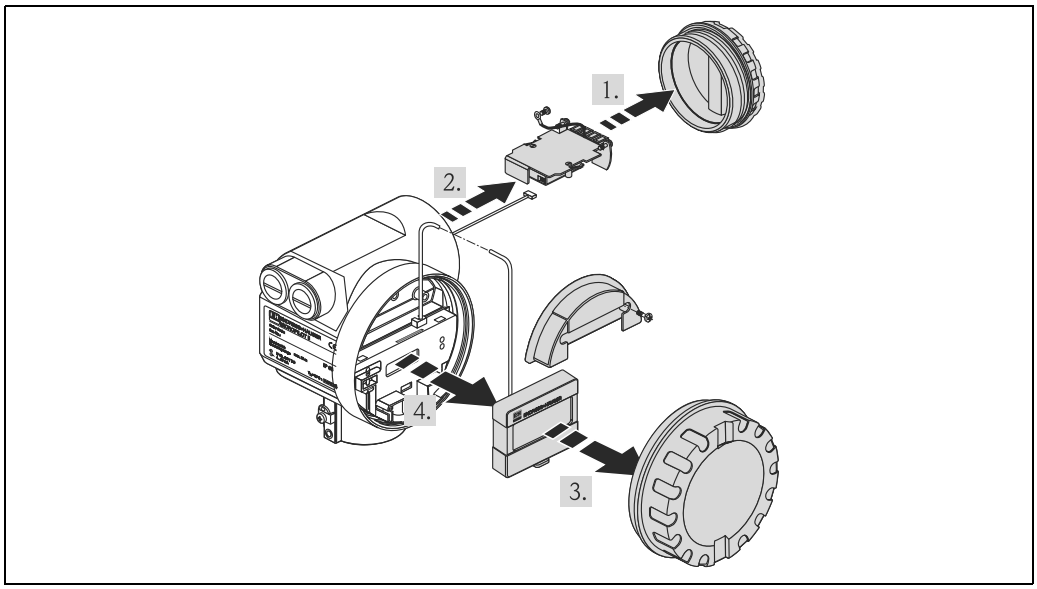

A0021218

Order of exchange:

1. Unscrew lid from terminal compartment.
2. Disconnect cable at terminal module. Unscrew mounting screws at terminal module and disconnect ground cable. Pull out terminal module. A connection to a cable feed-through is located at the rear side of the module (the feed-through can be unscrewed, if required).
3. Unscrew lid from electronics compartment.
4. If installed, take display out of holder by pushing the hook upwards. Break the calibration seal to unplug the sealing pin.

⚠ CAUTION

If the calibration seal is broken, the national calibration authority should be informed within 24 hours.

1. Pull front panel off.
2. Unplug display cable.
3. Loosen screw in cover and remove cover.
4. Loosen mounting screws at electronics housing.
5. Pull electronics module out of the housing. Unplug connection cable (right) to the terminal module from the electronics. Unplug antenna cable (left) with unplug tool.

⚠ CAUTION

Don't damage the antenna cable.

6. Press lower hook at module housing slightly inwards.
7. Loosen the set screw in the housing about 1 turn. (Hexagon key AF4)
8. Unscrew the stop screw in the housing about 4-5 turns. (Hexagon key AF2.5)
9. While turning the complete antenna assembly, pull it out of the housing.

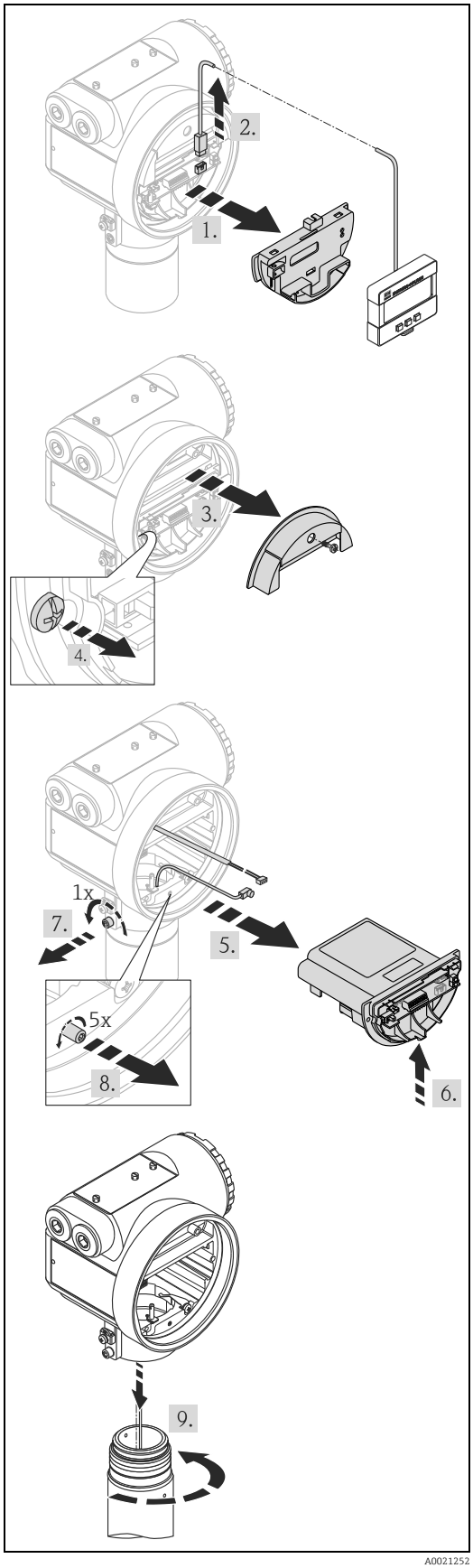

A0021252

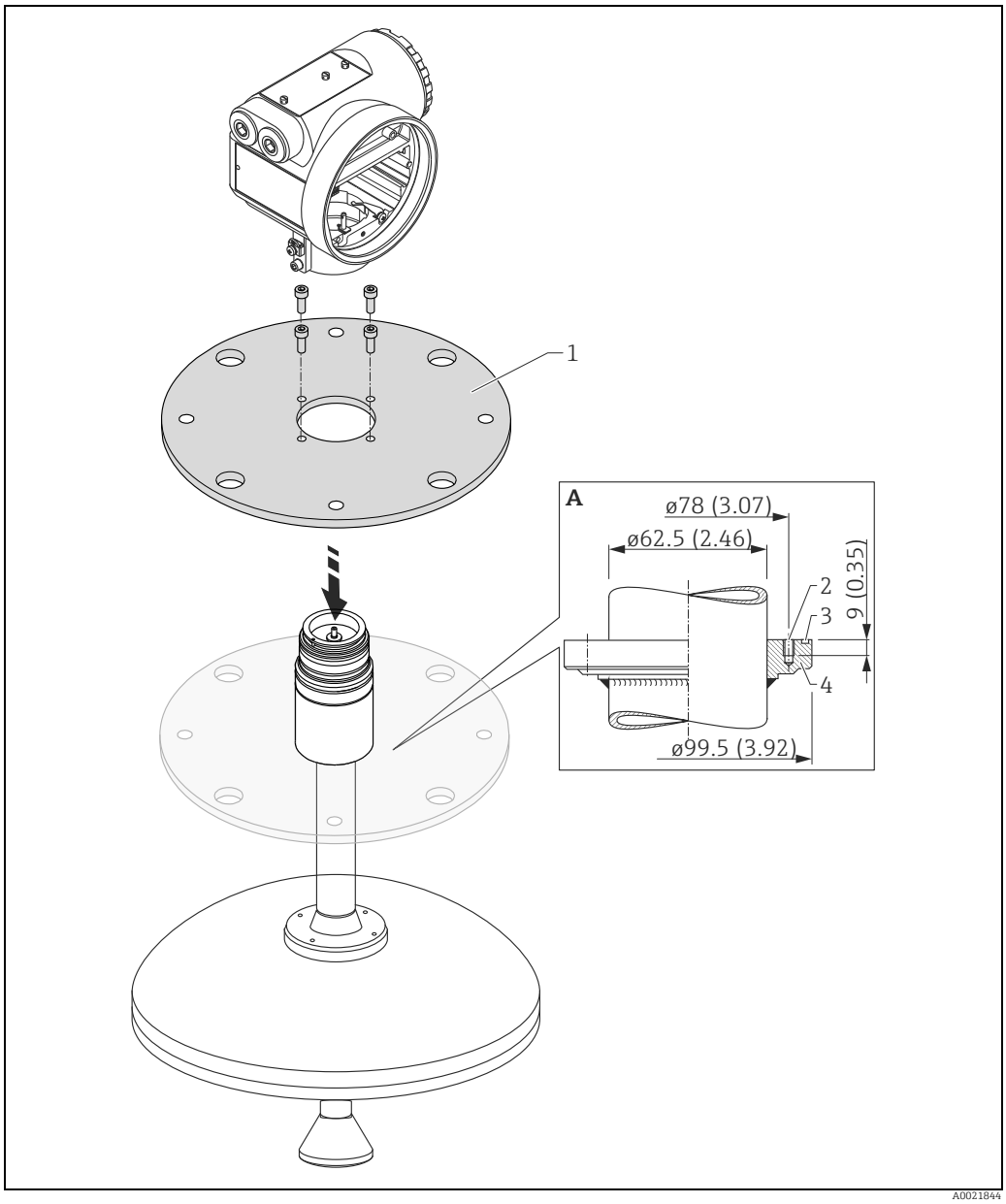

A Flange hub for the connection to flanges provided by the customer. Dimensions: mm (in).

1 Endress+Hauser UNI flange (max. 1 bar (14.5 psi))
1 Mounting: 4 bolts M6 / 90°; e.g.: DIN912
2 O-Ring 85.3x3.53; included (same material as sensor seal)
3 Flange hub

The mounting of the housing and electronic raised last in - first out how disassembly.

3.5 Post-installation check

After the measuring device has been installed, perform the following checks:
- Is the measuring device damaged (visual check)?
- Does the measuring device correspond to the measuring point specifications such as process temperature/pressure, ambient temperature, measuring range, etc.?
- Is the flange marking correctly aligned (→ 10)?
- Have the flange screws been tightened up with the respective tightening torque?
- Are the measuring point number and labeling correct (visual check)?
- Is the measuring device adequately protected against rain and direct sunlight (→ 68)?

4 Wiring

4.1 Quick wiring guide

When grounding conductive screens, the corresponding directives EN 60079-14 and EN 1127-1 must be observed. Recommendation for safe grounding of conductive screens:

⚠ CAUTION

Before connection please note the following:

- The power supply must be identical to the data on the nameplate.
- Switch off power supply before connecting the device.
- Connect equipotential bonding to transmitter ground terminal before connecting the device.
- Tighten the locking screw:
  It forms the connection between the antenna and the housing ground potential.
- When you use the measuring system in hazardous areas, make sure you comply with national standards and the specifications in the safety instructions (XA's)

4.1.1 Wiring

⚠ CAUTION

Before connection please note the following:

- The power supply to be delivered by a transmitter supply unit.
- Befor removing housing cover at seperate connection compartment turn off the power supply!

1. Insert cable through gland . Use screened, twisted 2-wire or 4-wire cable.

   ⚠ CAUTION

   Only ground screening of the line on sensor side.
2. Make connection (see pin assignment).
3. Tighten cable gland.
4. Replace and tighten off housing cover.
5. Switch on power supply.

A Micropilot S situated in a hazardous area is connected as a **single device** to a **power supply unit and transmitter** situated outside of the hazardous area. In this case, it is recommended that the screen be connected directly to the Micropilot at the housing's earth, whereby the Micropilot S and the power supply unit are connected to the same potential equalization line.

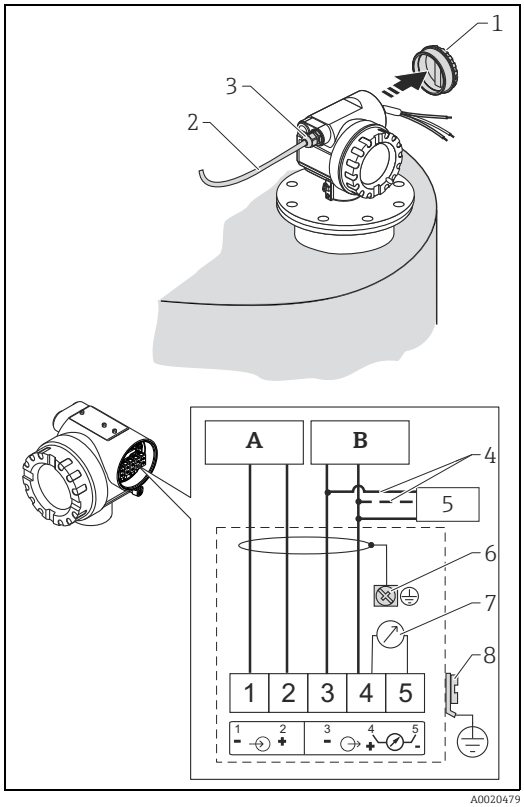

A Power 24 VDC; from a transmitter supply unit
B Signal 24 VDC; from a transmitter supply unit
1 Housing cover
2 Cable
3 Cable gland
4 Alternative connection
5 Commubox FXA195, Field Communicator
6 Shielding cable
7 Test socket; Output current
8 PML (potential matching line)

4.1.2 Wiring with Tank Side Monitor NRF590

⚠ CAUTION

Before connection please note the following:

- Make sure you use the specified cable gland.
- Befor removing housing cover at seperate connection compartment turn off the power supply!

1. Insert cable through gland . Use screened, twisted 2-wire or 4-wire cable.

   ⚠ CAUTION

   Only ground screening of the line on sensor side.
2. Make connection (see pin assignment).
3. Tighten cable gland.
4. Replace and tighten off housing cover.
5. Switch on power supply.

The Micropilot S is - possibly in combination with other devices - connected to a Tank Side Monitor in a hazardous area. In this case, it is recommended that you ground the cable screen centrally at the NRF590 and connect all devices to the same potential equalization line (PML). If, for functional reasons, a capacitive coupling is required between local earth and screen (multiple grounding), ceramic condensers with a dielectric strength of min. 1500 Veff must be used, whereby the total capacitance of 10 nF must not be exceeded. Notes on grounding interconnected intrinsically safe devices are provided by the FISCO model. If there is no way to set a ground cable between NRF590 and Micropilot S it is possible to ground single side (grounding on side NRF590). In this case it's imperative to ground the shield (on Micropilot S side) via a ceramic capacitor with a maximum capacitance of 10 nF and a minimum insulating voltage of 1500 V.

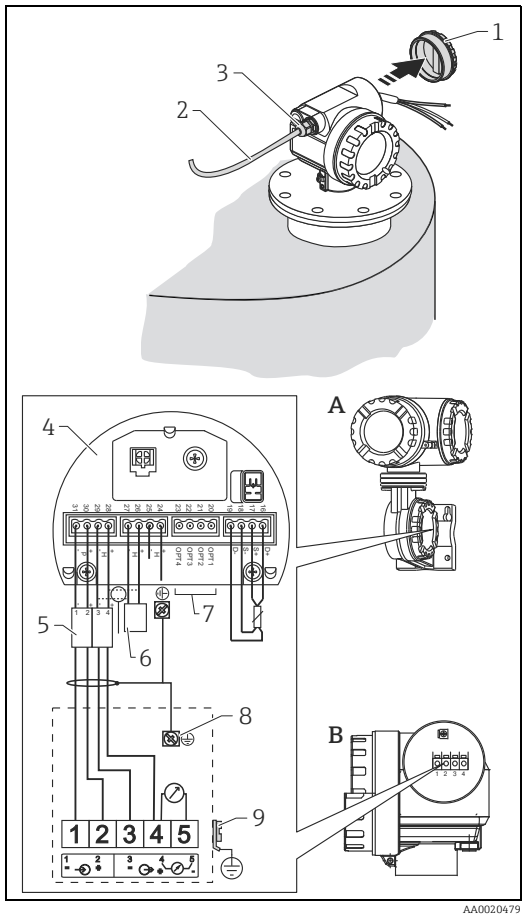

A Tank Side Monitor NRF590
B Micropilot S
1 Housing cover
2 Cabel
3 Cable gland
4 Intrinsically safe terminal board
5 Only for Micropilot S
6 HART Sensor
7 Grounding single sided on Tank Side Monitor NRF590
8 Shielding cable
9 PML (potential equalization line)

4.2 Connecting the measuring unit

Terminal compartment

The housing features a separate terminal compartment.

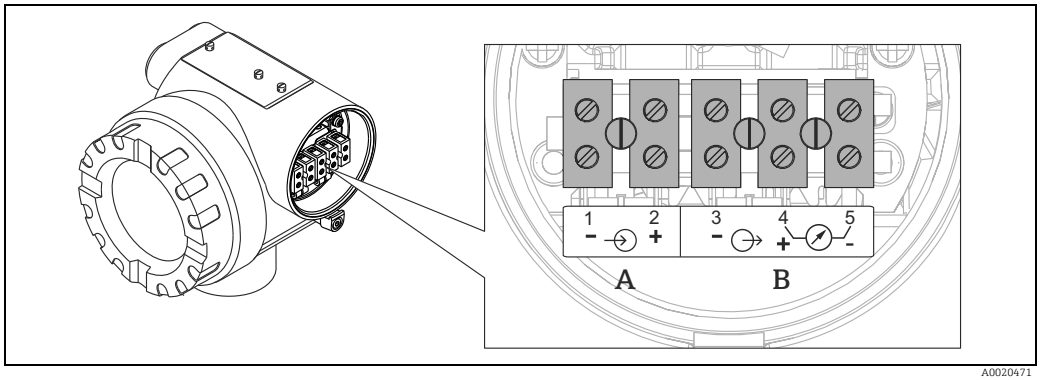

A Power supply
B Signal

Load HART

Minimum load for HART communication: 250 Ω

Cable entry

Description	Feature	Option model
Cable gland M20	060	2
Thread for cable gland G ½"	060	3
Thread for cable gland NPT ½"	060	4

Supply voltage

DC voltage: per table below

Communication		Terminal voltage	minimum	maximum
Power supply	Standard	U (20 mA) =	16 V	36 V
	Ex	U (20 mA) =	16 V	30 V
Signal	Ex	U (4 mA) =	11.5 V	30 V
		U (20 mA) =	11.5 V	30 V

Power consumption

- Max. 330 mW at 16 V
- Max. 500 mW at 24 V
- Max. 600 mW at 30 V
- Max. 700 mW at 36 V

Current consumption

Max. 21 mA (50 mA inrush current)

Overvoltage protector

- The level transmitter Micropilot S is equipped with an internal overvoltage protector (600 Vrms surge arrester) according to EN/IEC 60079-14 or EN/IEC 60060-1 (impulse current test 8/20 µs, Î = 10 kA, 10 pulses). Additionally, the device is protected by a galvanic insulation of 500 Vrms between the power supply and the (HART) current ouput. Connect the metallic housing of the Micropilot S to the tank wall or screen directly with an electrically conductive lead to ensure reliable potential matching.
- Installation with additional overvoltage protector HAW560Z/HAW562Z (see XA00081F "Safety instructions for electrical apparatus certified for use in explosion-hazardous areas").
  - Connect the external overvoltage protector and the Micropilot S transmitter to the local potential matching system.
  - Potentials shall be equalised both inside and outside the explosion hazardous area.
  - The cable connecting the overvoltage protector and the Micropilot S transmitter shall not exceed 1 m (3.3 ft) in length.
  - The cable shall be protected e.g. routed in an armoured hose.

Power supply

- For stand alone operation via two Endress+Hauser RN221N.
- Integrated in tank gauging system via Endress+Hauser Tank Side Monitor NRF590 (recommended operation mode).

Highly accurate measurement

For highly accurate measurements the measured variable must be transmitted using HART protocol to ensure the necessary resolution.

4.2.1 Connection to Tank Side Monitor NRF590

"Wiring with Tank Side Monitor NRF590", → 24.

4.2.2 HART connection with two Endress+Hauser RN221N

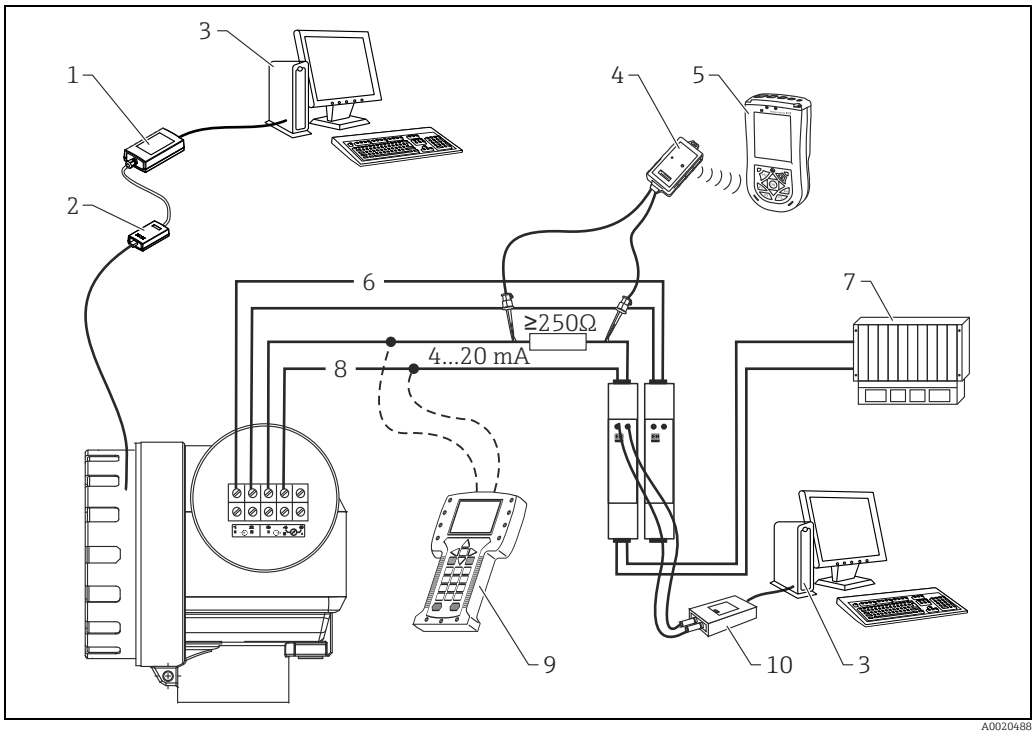

1	*Commubox FXA291 (USB)*	6	*Power supply*
2	*ToF Adapter FXA291*	7	*PLC*
3	*FieldCare*	8	*Signal*
4	*VIATOR Bluetooth modem with connecting cable*	9	*Field Communicator 475*
5	*Field Xpert SFX100*	10	*Commubox FXA195 (USB)*

4.2.3 HART connection with other supplies

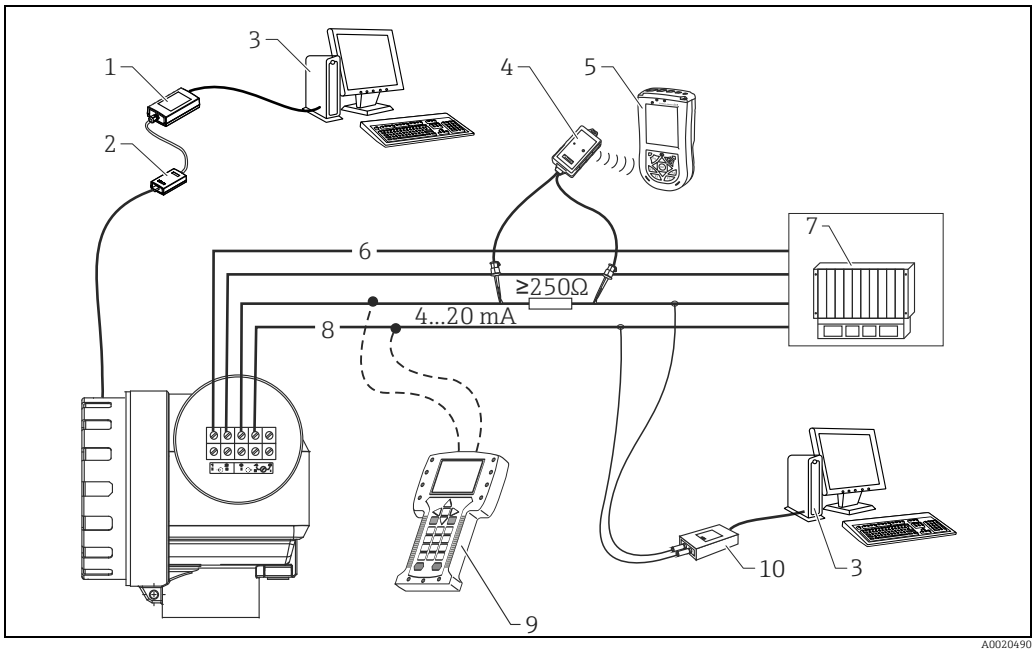

1	*Commubox FXA291 (USB)*	6	*Power supply*
2	*ToF Adapter FXA291*	7	*DC voltage or PLC*
3	*FieldCare*	8	*Signal*
4	*VIATOR Bluetooth modem with connecting cable*	9	*Field Communicator 475*
5	*Field Xpert SFX100*	10	*Commubox FXA195 (USB)*

4.3 Recommended connection

4.3.1 Equipotential bonding

Connect the Equipotential bonding to the external ground terminal of the transmitter.

4.3.2 Wiring screened cable

⚠ CAUTION

In Ex applications, the device must only be grounded according to requirements in chapter "Quick wiring guide", → 23. Further safety instructions are given in the separate documentation for applications in explosion hazardous areas.

4.4 Degree of protection

- Housing: IP65/68; NEMA 4X/6P
- Antenna: IP65/68; NEMA 4X/6P

4.5 Post-connection check

After wiring the measuring device, perform the following checks:
- Is the terminal allocation correct (→ 23)?
- Is the cable gland tight?
- Is the housing cover screwed tight?
- If auxiliary power is available:
  Is the device ready for operation and does the liquid crystal display show any value?
- Is grounding (tank potential) correct?

5 Operation

5.1 Quick operation guide

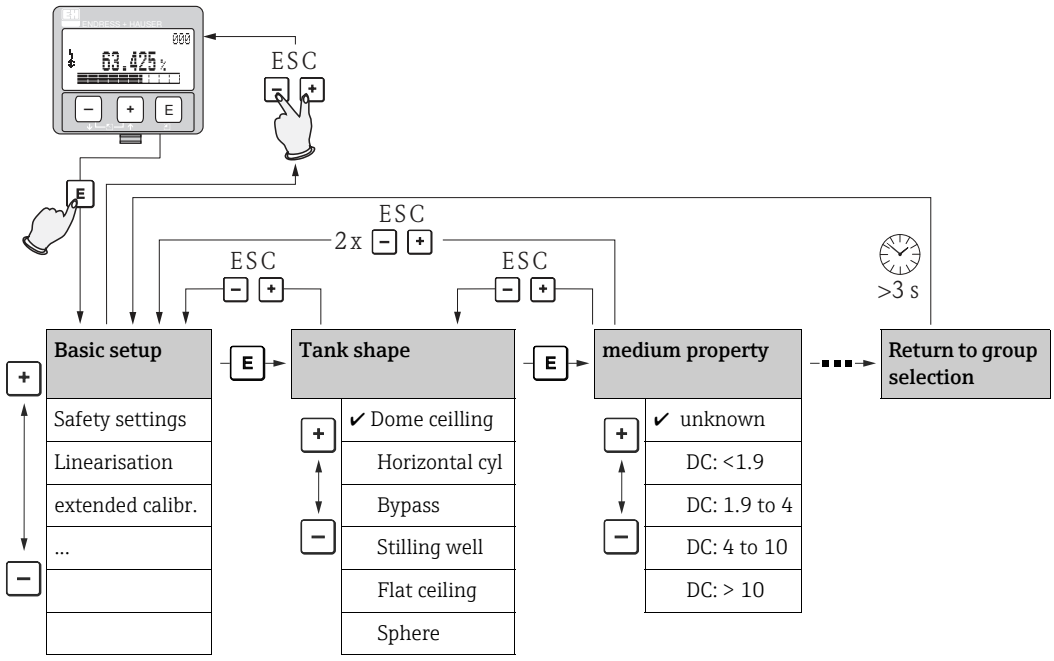

Selection and configuration in Operation menu:

1. Change from Measured Value Display to **Group Selection** by pressing E.
2. Press + or − to select the required **Function Group** (e.g. "basic setup (00)")and confirm by pressing E. The first function is selected (e.g. tank shape (002)). The active selection is marked by a ✔ in front of the menu text.
3. Activate Edit mode with + or −.
   Selection menus
   a. Select the required parameter in the **function** selected with + or −.
   b. E confirms selection; ✔ appears in front of the selected parameter.
   c. E confirms the edited value; system quits edit mode.
   d. Simultaneous pressing of + and − interrupts selection; system quits edit mode.

   Typing in numerals and text
   a. Press + or − to edit the first character of the numeral / text.
   b. E positions the cursor at the next character; continue with a. until you have completed your input.
   c. If a ↵ symbol appears at the cursor, press E to accept the value entered; system quits edit mode.
   d. Simultaneous pressing of + and − interrupts selection; system quits edit mode.
4. Press E to select the next function.
5. Press + and − simultaneously once; return to previous **function**.
   Press + and − simultaneously twice; return to **Group Selection**.
6. Press + and − simultaneously to return to **Measured value display**.

5.1.1 General structure of the operating menu

The operating menu is made up of two levels:
- **Function groups (00, 01, 03, ..., 0C, 0D):** The individual operating options of the device are split up roughly into different function groups. The function groups that are available include, e.g.: "**basic setup**", "**safety settings**", "**output", "display**", etc.
- **Functions (001, 002, 003, ..., 0D8, 0D9):** Each function group consists of one or more functions. The functions perform the actual operation or parameterisation of the device. Numerical values can be entered here and parameters can be selected and saved. The available functions of the "**basic setup**" **(00)** function group include, e.g.: "**tank shape**" **(002)**, "**medium property**" **(003)**, "**process cond.**" **(004)**, "**empty calibr**" **(005)**, etc.

If, for example, the application of the device is to be changed, carry out the following procedure:

1. Select the "**basic setup**" **(00)** function group.
2. Select the "**tank shape**" **(002)** (function (where the existing tank shape is selected).

5.1.2 Identifying the functions

For simple orientation within the function menus (→ 80), for each function a position is shown on the display.

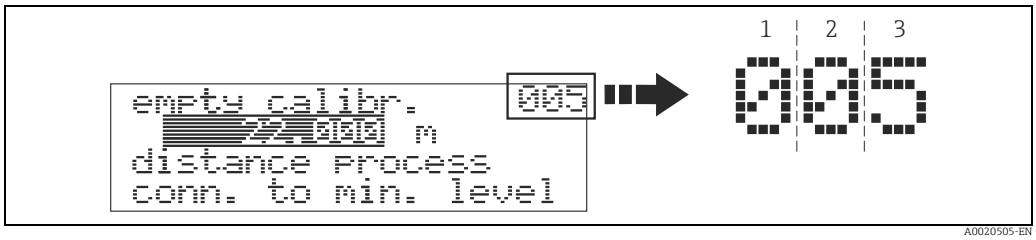

1 Function group
2 Function

The first two digits identify the function group:
- **basic setup** **00**
- **safety settings** **01**
- **linearisation** **04**

...

The third digit numbers the individual functions within the function group:
- **basic setup** **00** →
  - **tank shape** **002**
  - **medium property** **003**
  - **process cond.** **004**

  ...

Here after the position is always given in brackets (e.g. "**tank shape**" **(002)**) after the described function.

5.2 Display and operating elements

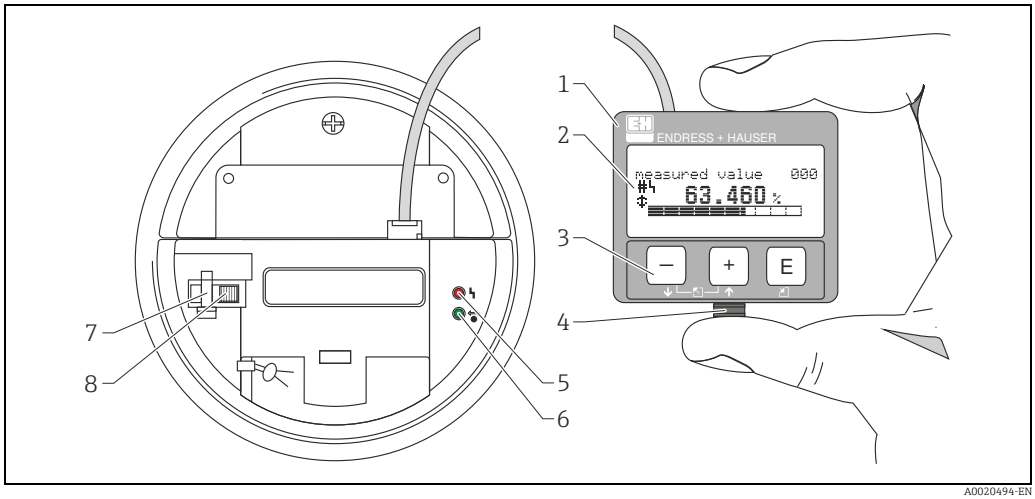

A0020494-EN

1 *LCD (liquid crystal display)*
2 *Symbols*
3 *Operating keys*
4 *Snap-fit*
5 *Red LED*
6 *Green LED*
7 *Custody locking switch*
8 *Sealing pin*

NOTICE

To access the display the cover of the electronic compartment may be removed even in hazardous area. The LCD-display can be removed to ease operation by simply pressing the snap-fit (see graphic above). It is connected to the device by means of a 500 mm (19.7 in) cable.

5.2.1 Display

Liquid crystal display (LCD)

Four lines with 20 characters each. Display contrast adjustable through key combination.

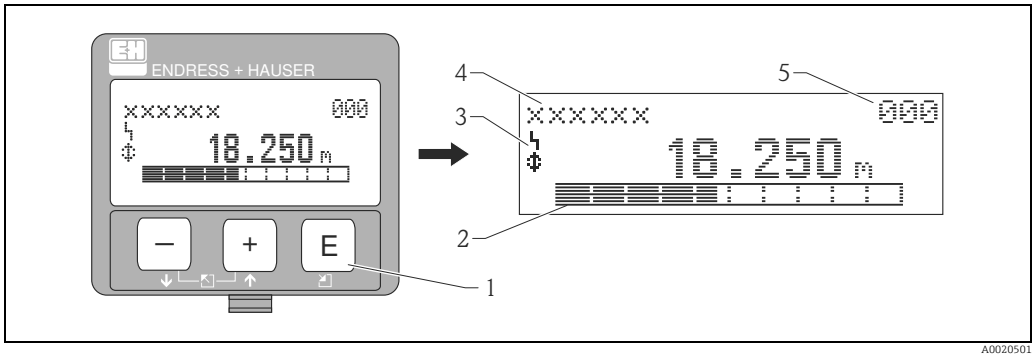

A0020501

1 *Operating keys*
2 *Bargraph*
3 *Symbols*
4 *Function name*
4 *Parameter Identification number*

5.2.2 Display symbols

The following table describes the symbols that appear on the liquid crystal display:

Symbols	Meaning
	**ALARM_SYMBOL** This alarm symbol appears when the device is in an alarm state. If the symbol flashes, this indicates a warning.
	**LOCK_SYMBOL** This lock symbol appears when the device is locked, i.e. if no input is possible.
	**COM_SYMBOL** This communication symbol appears when a data transmission via e.g. HART is in progress.
	**Calibration to regulatory standards disturbed** If the device is not locked or it cannot guarantee the calibration to regulatory standards, the situation will be indicated on the display via the symbol.

Light emitting diods (LEDs):

There is a green and a red LED besides the liquid crystal display.

LED (LED)	Meaning
red LED continuously on	Alarm
red LED flashes	Warning
red LED off	No alarm
green LED continuously on	Operation
Green LED flashes	Communication with external device

5.2.3 Key assignment

The operating elements are located inside the housing and are accessible for operation by opening the lid of the housing.

Function of the keys

Key(s)	Meaning
[+] or [↑]	▪ Navigate upwards in the selection list. ▪ Edit numeric value within a function.
[−] or [↓]	▪ Navigate downwards in the selection list. ▪ Edit numeric value within a function.
[Esc −] [+] or [←]	Navigate to the left within a function group.
[E]	▪ Navigate to the right within a function group. ▪ Confirm entry.
[+] and [E] or [−] and [E]	Contrast settings of the LCD.
[+] and [−] and [E]	Hardware lock / unlock After a hardware lock, an operation of the device via display or communication is not possible! The hardware can only be unlocked via the display. An unlock parameter must be entered to do so.

Custody locking switch

Access to the electronics can be prevented by means of a custody locking switch that locks the device settings. The custody locking switch can be sealed for custody transfer applications.

Software reliability

The software used in the radar device Micropilot S fulfills the requirements of OIML R85. This particularly includes:
- cyclical test of data consistency
- non-volatile memory
- segmented data storage

The radar device Micropilot S continuously monitor the compliance with accuracy requirements for custody transfer measurements according to OIML R85. If the accuracy cannot be maintained, a specific alarm is generated on the local display and via the digital communication.

5.3 Local operation

5.3.1 Locking of the configuration mode

The Micropilot can be protected in two ways against unauthorised changing of device data, numerical values or factory settings:

Function "unlock parameter" (0A4):

A value **<> 100** (e.g. 99) must be entered in "**unlock parameter**" **(0A4)** in the "**diagnostics**" **(0A)** function group. The lock is shown on the display by the symbol and can be released again either via the display or by communication.

Hardware lock:

The device is locked by pressing the [+], [−] and [E] keys at the same time.
The lock is shown on the display by the symbol and can **only** be unlocked again via the display by pressing the [+], [−] and [E] keys at the same time again.
It is **not** possible to unlock the hardware by communication. All parameters can de displayed even if the device is locked.

On-site display	Meaning
measured value 000 63.455 %	[+], [−] and [E] press simultaneous
unlock parameter 0A4 Hardware locked	
measured value 000 63.455 %	The LOCK_SYMBOL appears on the LCD

5.3.2 Unlocking of configuration mode

If an attempt is made to change parameters when the device is locked, the user is automatically requested to unlock the device:

Function "unlock parameter" (0A4):

By entering the unlock parameter (on the display or via communication) **100** (for HART devices) the Micropilot is released for operation.

Hardware unlock:

After pressing the [+], [−] and [E] keys at the same time, the user is asked to enter the unlock parameter **100** (for HART devices).

On-site display	Meaning
measured value 000 63.455 %	[+], [−] and [E] press simultaneous
unlock parameter 0A4 100	Please enter unlock code and confirm with [E]
measured value 000 63.455 %	

⚠ CAUTION

Changing certain parameters such as all sensor characteristics, for example, influences numerous functions of the entire measuring system, particularly measuring accuracy. There is no need to change these parameters under normal circumstances and consequently, they are protected by a special code known only to the Endress+Hauser service organization. Please contact Endress+Hauser if you have any questions.

5.3.3 Factory settings (Reset)

⚠ CAUTION

A reset sets the device back to the factory settings. This can lead to an impairment of the measurement. Generally, you should perform a basic setup again following a reset.

A reset is only necessary if the device...
- ... no longer functions
- ... must be moved from one measuring point to another
- ... is being de-installed /put into storage/installed

On-site display	
reset	0A3
0	
for reset code	
see manual.	

User input ("reset" (0A3)):
- 333 = customer parameters
- 555 = History

333 = reset customer parameters

This reset is recommended whenever an device with an unknown "history" is to be used in an application:
- The Micropilot is reset to the default values.
- The customer specific tank map is not deleted.
- A linearisation is switched to "**linear**" although the table values are retained. The table can be reactivated in the "**linearisation**" **(04)** function group.

List of functions that are affected by a reset:
- tank shape (002)
- empty calibr. (005)
- full calibr. (006)
- pipe diameter (007)
- output on alarm (010)
- output on alarm (011)
- outp. echo loss (012)
- ramp %span/min (013)
- delay time (014)
- safety distance (015)
- in safety dist. (016)
- Tank Gauging (030)
- auto correction (031)
- level/ullage (040)
- linearisation (041)
- customer unit (042)
- diameter vessel (047)
- range of mapping (052)
- pres. Map dist (054)
- offset (057)
- low output limit (062)
- fixed current (063)
- fixed current (064)
- simulation (065)
- simulation value (066)
- format display (094)
- distance unit (0C5)
- download mode (0C8)

The tank map can also be reset in the "**mapping**"" **(055)** function of the "**extended calibr.**" **(05)** function group.

555 = History Reset

After mounting and aligning the equipment, carry out a history reset.

5.4 Display and acknowledging error messages

Type of error

Errors that occur during commissioning or measuring are displayed immediately on the local display. If two or more system or process errors occur, the error with the highest priority is the one shown on the display.

The measuring system distinguishes between the following types of error:

- **A (Alarm):**
  Device goes into a defined state (e.g. MIN, MAX, HOLD)
  Indicated by a constant symbol.
  (For a description of the codes, → 70)
- **W (Warning):**
  Device continue measuring, error message is displayed.
  Indicated by a flashing symbol.
  (For a description of the codes, → 70)
- **E (Alarm / Warning):**
  Configurable (e.g. loss of echo, level within the safety distance)
  Indicated by a constant/flashing symbol.
  (For a description of the codes, → 70)

On-site display	
present error	
linearisation ch1	
not complete,	
not usable	A671

5.4.1 Error messages

Error messages appear as four lines of plain text on the display. In addition, a unique error code is also output. A description of the error codes, → 70.

- The "**diagnostics**" **(0A)** function group can display current errors as well as the last errors that occurred.
- If several current errors occur, use + or − to page through the error messages.
- The last occurring error can be deleted in the "**diagnostics**" **(0A)** function group with the funktion "**clear last error**" **(0A2)**.

5.5 HART communication

Apart from local operation, you can also parameterise the measuring device and view measured values by means of a HART protocol. The following operating options are available:
- Operation via the universal handheld operating unit, the Field Communicator 475.
- Operation via the compact and robust handheld operating unit, the Field Xpert
- Operation via the Personal Computer (PC) using the operating program (e.g. FieldCare; Connections, → 27).
- Operation via the Tank Side Monitor NRF590.

NOTICE

The Micropilot S can also be operated locally using the keys. If operation is prevented by the keys being locked locally, parameter entry via communication is not possible either.

5.5.1 Protocol specific data

Manufacturer ID	000011 hex
Device Type Code	0010 hex
Transmitter specific revision	03 hex
HART specification	5.0
DD-Files	Information and files can be found on: ▪ www.endress.com ▪ www.hartcomm.org
Load HART	Min. 250 Ω
Devices variables	Primary value: level or volume[1)]
Features supported	▪ Burst mode ▪ Additional Transmitter Status

1) according to configuration

5.5.2 Operation via Field Xpert

Compact, flexible and robus industry handheld terminal for remote parametrization and measured value inspection via the HART current output or FOUNDATION Fieldbus.
For details refer to Operating Instructions BA00060S/04/EN.

5.5.3 Operation with Field Communicator 475

All device functions can be adjusted via a menu operation with the Field Communicator 475.

NOTICE

Further information on the handheld unit is given in the respective operating manual included in the transport bag of the Field Communicator 475.

5.5.4 Operation with FieldCare

FieldCare is an Endress+Hauser asset management tool based on FDT technology. With FieldCare, you can configure all Endress+Hauser devices as well as devices from other manufacturers that support the FDT standard. Hardware and software requirements you can find on the internet:
www.endress.com » select your country » Search: FieldCare » FieldCare » Technical Data.

FieldCare supports the following functions:
- Configuration of transmitter in online operation
- Signal analysis via envelope curve
- Tank linearization
- Loading and saving device data (upload / download)
- Documentation of the measuring point

Connection options:
- HART via Commubox FXA195 and the USB port on a computer
- Commubox FXA291 with ToF Adapter FXA291 (USB) via service interface

Menu-guided commissioning

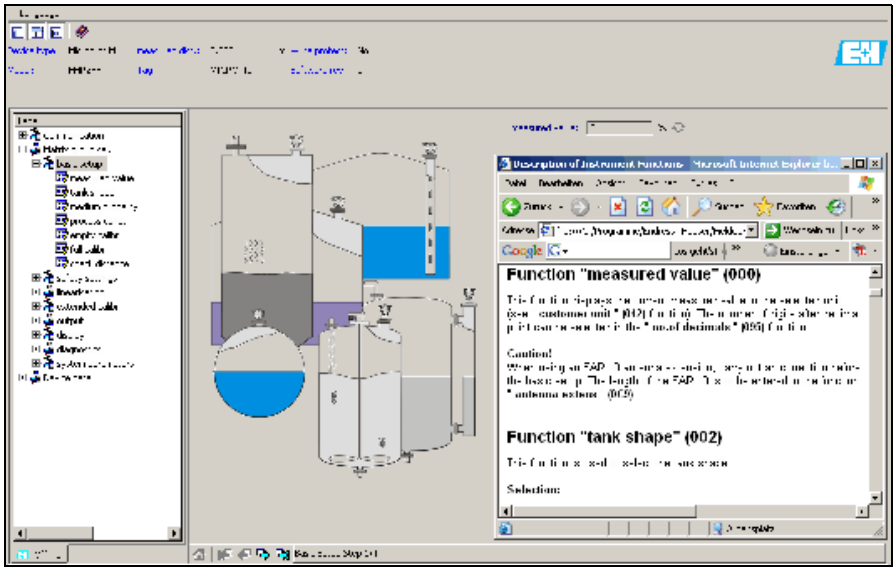

A0021211-EN

Signal analysis via envelope curve

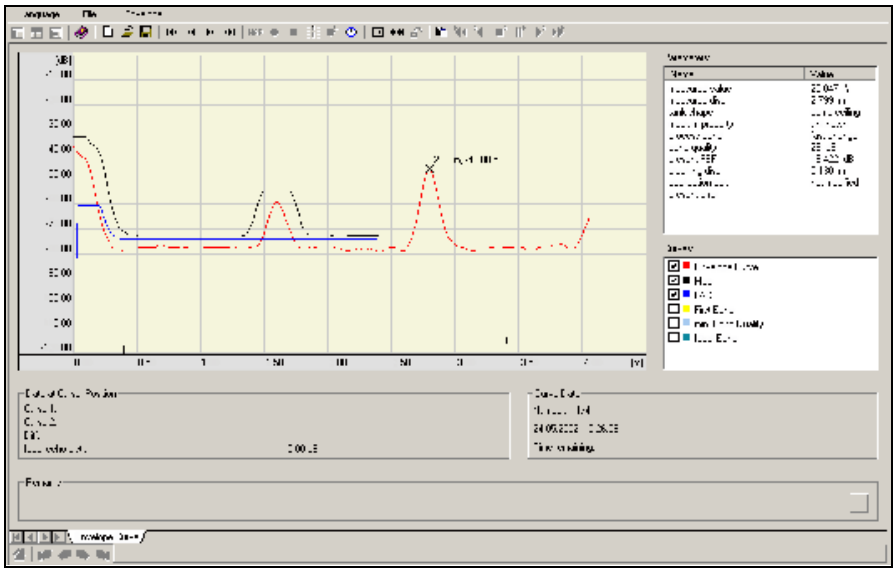

A0021212-EN

Tank linearization

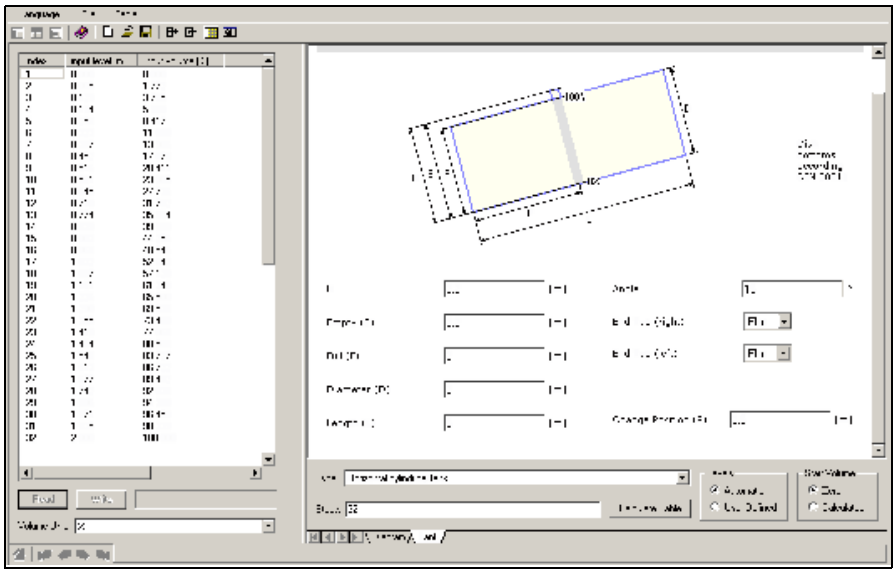

A0021213-EN

6 Commissioning

6.1 Function check

Make sure that all final checks have been completed before you start up your measuring point:
- Checklist "Post-installation check", → 22.
- Checklist "Post-connection check", → 28.

6.2 Switching on the measuring device

When the device is switched on for the first time, the following messages appear in a sequence of 5 s on the display: software version, communication protocol and language selection.

On-site display	Meaning
Language 092 ✔ English Deutsch Français	Select the language (this message appears the first time the device is switched on)
distance unit 0C5 ✔ m ft mm	Select the basic unit (this message appears the first time the device is switched on)
measured value 000 63.455 %	The current measured value is displayed
	After E is pressed, you reach the group selection
Group selection 00→ ✔ basic setup safety settings linearisation	This selection enables you to perform the basic setup

6.3 Basic Setup

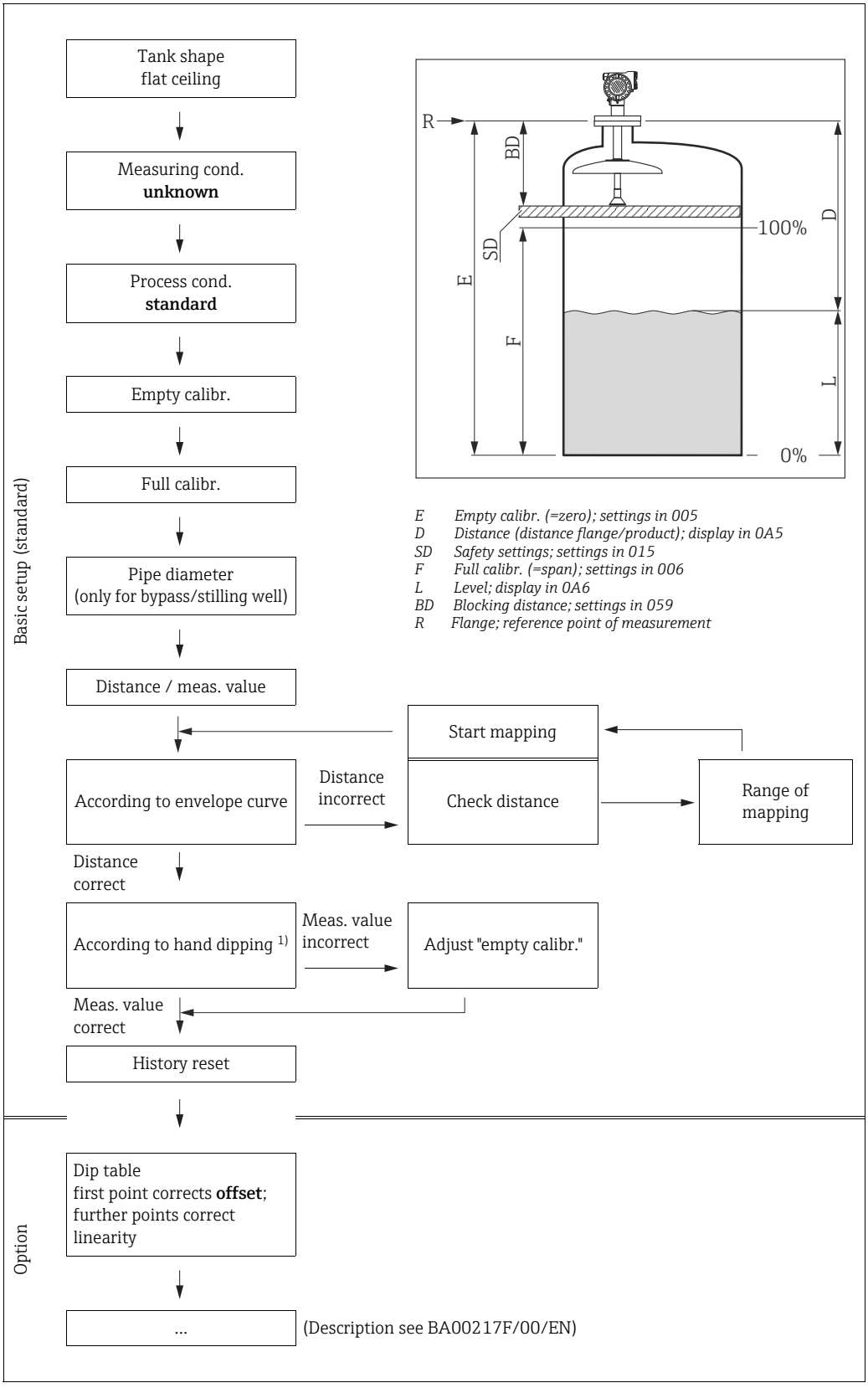

1) Note: the dipped value should be taken at a level ≥2 m (6.6 ft)

⚠ CAUTION

To successfully commission a precise measurement to the nearest mm, it is important you carry out a history reset on first installation after mechanical installation and after the basic setup of the device (→ 51). Only after a history reset the mounting calibration is carried out. Enter the measurement offset as the first point in the dip table for the mounting calibration. When a value is dipped at a later date, make a second entry into the dip table, using the semi-automatic mode. This way, you can easily carry out a linear correction of the measurement. When configuring the function in "basic setup" (00) please take into account the following notes:

- Select the functions as described, → 29.
- Some functions can only be used depending on the parameterisation of the device. For example, the pipe diameter of a stilling well can only be entered if "**stilling well**" was selected beforehand in the "**tank shape**" **(002)** function.
- Certain functions (e.g. starting an interference echo mapping (053)) prompt you to confirm your data entries. Press + or − to select "**YES**" and press E to confirm. The function is now started.
- If you do not press a key during a configurable time period (» function group "**display**" **(09)**), an automatic return is made to the home position (measured value display).

NOTICE

Data handling during setup

- The device continues to measure while data entry is in progress, i.e. the current measured values are output via the signal outputs in the normal way.
- If the envelope curve mode is active on the display, the measured values are updated in a slower cycle time. Thus, it is advisable to leave the envelope curve mode after the measuring point has been optimised.
- If the power supply fails, all preset and parameterised values remain safely stored in the EEPROM.
- All functions are described in detail, as is the overview of the operating menu itself, in the manual **"BA00217F - Description of Instrument Functions"**, which can be found on the enclosed CD-ROM.
- The default values of the parameters are typed in **boldface**.

6.4 Basic Setup with the device display VU331

Function "measured value" (000)

On-site display	
measured value	000
63.455 %	

Meaning

This function displays the current measured value in the selected unit (see "**customer unit**" **(042)**) function). The number of digits after decimal point can be selected in the "**no.of decimals**" **(095)** function. The length of the bargraph corresponds to the percental value of the present measured value with regard to the span.

6.4.1 Function group "basic setup" (00)

On-site display	
Group selection	00→
✔ basic setup	
safety settings	
linearisation	

Function "tank shape" (002)

On-site display	
tank shape	002
✔ flat ceiling	
sphere.	
dome ceiling	

Meaning

This function is used to select the tank shape.

Further options:
- Dome ceiling
- Horizontal cyl
- **Flat ceiling** (Typical ceiling of storage tanks: a slight slope of only a few degrees can be neglected)
- Sphere

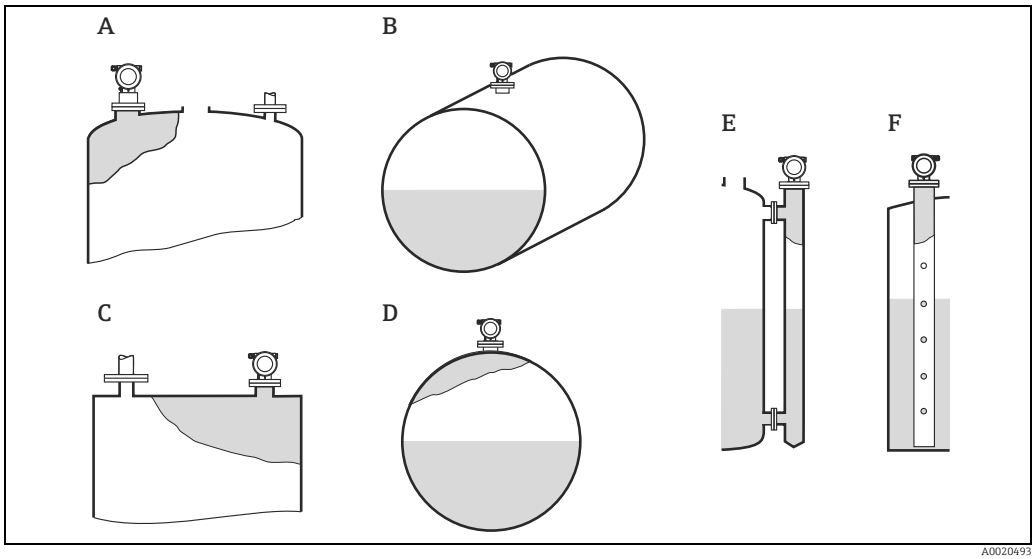

A Dome ceiling
B horizontal cyl
C Flat ceiling
D Sphere
E Bypass
F Stilling well

Function "medium property." (003)

On-site display	
medium property	003
✔ unknown	
DC: < 1.9.	
DC: 1.9...4	

Meaning

This function is used to select the dielectric constant.

Further options:
- **unknown**
- DC: < 1.9
- DC: 1.9 to 4
- DC: 4 to 10
- DC: > 10

Media group	DC (εr)	Examples
A	1.4 to 1.9	Non-conducting liquids, e.g. liquefied gas (LPG). For more information please contact your Endress+Hauser representative.
B	1.9 to 4	Non-conducting liquids, e.g. benzene, oil, toluene, white products, black products, crudes, bitumen/asphalts, ...
C	4 to 10	E.g. concentrated acids, organic solvents, esters, aniline, alcohol, acetone, ...
D	>10	Conducting liquids, e.g. aqueous solutions, dilute acids and alkalis

Function "process cond." (004)

On-site display	
process cond.	004
✔ standard	
calm surfaces.	
turb. surface	

Meaning

This function is used to select the process conditions..

Further options:
- **Standard**
- Calm surface
- Turb. surface
- Agitator
- Fast change
- Heavy conditions
- Test: no filter

standard	calm surface
For all applications that do not fit into any of the following groups.	Storage tanks with immersion tube or bottom filling
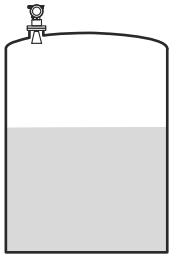 A0020531	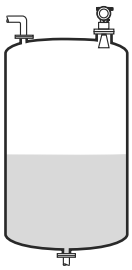 A0020533
The filter and output damping are set to average values.	The averaging filters and output damping are set to high values. → Steady meas. value → Precise measurement → Slower reaction time

NOTICE

When FMR533 is ordered as a Custody Transfer Specification, phase evaluation is enabled. The phase evaluation of the Micropilot S (→ 52) is only activated if you select the measuring conditions "standard", "calm surface" or "heavy conditions". If, however, "heavy conditions" is selected, no index values are stored. We strongly recommend that, in the case of rough product surfaces or rapid filling, you activate the appropriate application parameters.

Function "empty calibr." (005)

On-site display		
empty calibr.		005
	5.000	m
distance process		
conn. to min. level		

Meaning

This function is used to enter the distance from the flange (reference point of the measurement) to the minimum level (= zero).

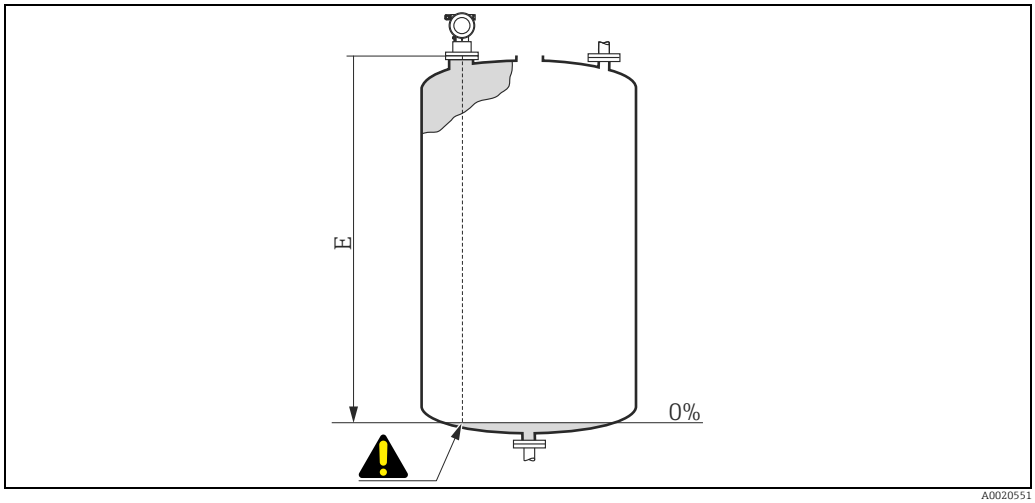

E Empty calibration (= zero)

⚠ CAUTION

For dish bottoms or conical outlets, the zero point should be no lower than the point at which the radar beam hits the bottom of the tank.

Function "full calibr." (006)

On-site display		
full calibr.		006
	5.000 m	
span		

Meaning

This function is used to enter the distance from the minimum level to the maximum level (= span). In principle, it is possible to measure up to the tip of the antenna. However, due to considerations regarding corrosion and build-up, the end of the measuring range should not be chosen any closer than 50 mm (1.97 in) to the tip of the antenna.

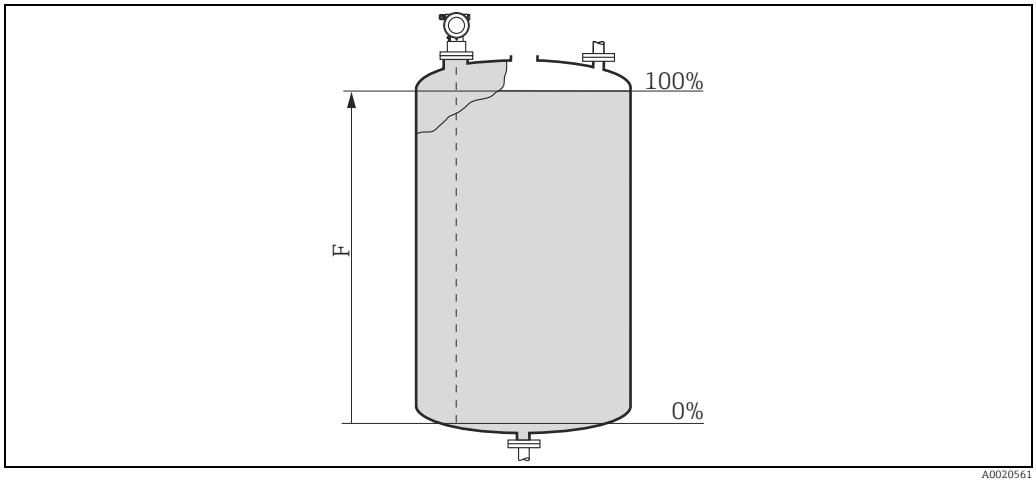

F Full calibration (= span)

Display "dist./ meas. value" (008)

On-site display		
dist./meas.value		008
dist.	2.463 m	
m.value.	63.414 %	

Meaning

The **distance** measured from the reference point to the product surface and the **level** calculated with the aid of th empty adjustment are displayed. Check whether the values correspond to the actual level or the actual distance.
The following cases can occur:

- Distance correct - meas. value correct:
  Continue with the next function **"check distance" (051)**
- Distance correct - meas. value incorrect:
  Check **"empty calibr." (005)**
- Distance incorrect - meas. value incorrect:
  Continue with the next function **"check distance" (051)**

Function "check distance" (051)

On-site display	
check disttance	051
✔ dist. unknown	
manual	
distance = ok	

Meaning

This function triggers the mapping of interference echoes. To do so, the measured distance must be compared with the actual distance to the product surface.

Further options:
- distance = ok
- dist. too small
- dist. too big
- **dist. unknown**
- manual

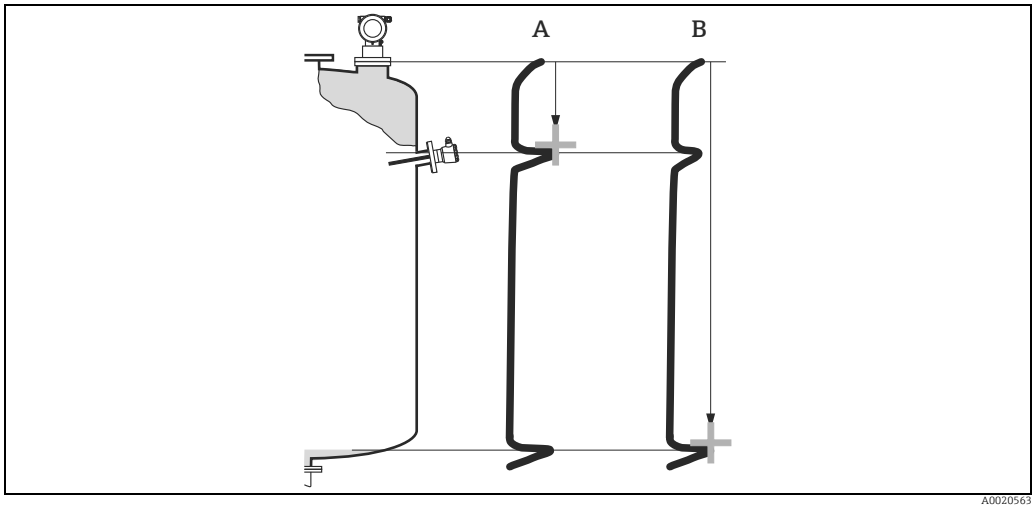

A Distance to small
B Distance ok

distance = ok
- mapping is carried out up to the currently measured echo
- The range to be suppressed is suggested in the "**range of mapping.**" **(052)** function

NOTICE
Anyway, it is wise to carry out a mapping even in this case.

dist. too small
- At the moment, an interference is being evaluated
- Therefore, a mapping is carried out including the presently measured echoes
- The range to be suppressed is suggested in the "**range of mapping.**" **(052)** function

dist. too big
- This error cannot be remedied by interference echo mapping
- Check the application parameters **(002), (003), (004)** and "**empty calibr.**" **(005)**

dist. unknown
If the actual distance is not known, no mapping can be carried out.

manual
A mapping is also possible by manual entry of the range to be suppressed. This entry is made in the "**range of mapping.**" **(052)** function.

⚠ CAUTION

The range of mapping must end 0.5 m (1.6 ft) before the echo of the actual level. For an empty tank, do not enter E, but E – 0.5 m (1.6 ft). If a mapping already exists, it is overwriten up to the distance specified in "range of mapping" (052). Beyond this value the existing mapping remains unchanged.

Function "range of mapping" (052)

On-site display		
range of mapping		052
	0.000 m	
input of		
mapping range		

Meaning

This function displays the suggested range of mapping. The reference point is always the reference point of the measurement (→ 42). This value can be edited by the operator. For manual mapping, the default value is: 0 m.

Function "start mapping" (053)

On-site display	
start mapping	053
✔ off	
on	

Meaning

This function is used to start the interference echo mapping up to the distance given in "**range of mapping**" **(052)**.

Selection:
- **off**
  No mapping is carried out
- **on**
  Mapping is started

During the mapping process the message "**record mapping**"" is displayed.

⚠ CAUTION

A mapping will be recorded only, if the device is not in alarm-state.

Display "dist./meas.value" (008)

On-site display		
dist./meas.value		008
dist.	2.463 m	
m.value.	63.414 %	

Meaning

The **distance** measured from the reference point to the product surface and the **level** calculated with the aid of th empty adjustment are displayed. Check whether the values correspond to the actual level or the actual distance.
The following cases can occur:
- Distance correct - meas. value correct:
  Continue with the next function **"check distance" (051)**
- Distance correct - meas. value incorrect:
  Check **"empty calibr." (005)**
- Distance incorrect - meas. value incorrect:
  Continue with the next function **"check distance" (051)**

Function "history reset" (009)

On-site display	
history reset	009
✔ no	
yes	

Meaning

By this function a history reset of the device is performed, i.e. the correspondance table between level an index values is deleted. A new correspondance table will be filled and stored after the history reset, compare → 52.

⚠ CAUTION

A history reset must be performed after:

- first installation or
- change of basic setup or
- change of the installation situation.

In this case alse effect a reset of the dip table in function **"dip table mode"** (033).

On-site display
Return to Group Selection

Meaning

After 3 s, the following message appears

Group selection	00→
✔ basic setup	
safety settings	
linearisation	

NOTICE

After the basic setup, an evaluation of the measurement with the aid of the envelope curve ("envelope curve" (0E) function group) is recommended.

6.5 Mounting calibration with device display VU331

6.5.1 Function group "mounting calibr." (03)

On-site display	
Group selection	03→
✔ mounting calibr.	
linearisation	
extended calibr.	

Function "tank gauging" (030)

On-site display	
tank gauging	030
✔ dip table	
auto correct.	

Meaning

Using this function, you can either enter a dip table or carry out an auto correction.

Function "auto correction" (031)

On-site display	
auto correction	031
✔ on	
off	

When measuring levels with radar systems, so-called "multipath reflections" can affect the level signal giving rise to serious measuring errors. "Multipath reflections" also include radar beams which are received by the radar system, which have not been reflected directly by the medium surface. They may reach the antenna via the basin wall and the medium surface. This phenomenon is particularly noticeable with devices mounted near to walls, as soon as the conical radar beam strikes the basin wall. The Micropilot S can automatically discover and correct measuring errors due to this "multiple path" propagation. This is because it uses two independent sets of information when evaluating reflection signals:

- Firstly, it evaluates the **amplitude** of the reflected energy using the so-called envelope curve system.
- Secondly, it evaluates the **phase** of the reflected energy.

The decisive factor for a constant output signal is to assign the phase values to the associated level values. This assignment is ensured using a correspondence table (index correction table).
The Micropilot S learns this for the specific application after installation (learning period). Therefore, after mounting the device, and **after** completing the basic calibration, a **history reset** (must be performed (enter "**yes**" in the "**history reset**" **(009)** function in the "**basic setup**" **(00)**) function group. Do not switch off the radar system during filling and emptying operations during the teach-in phase. Switching off when there are only negligible level changes produces no error.

⚠ CAUTION

During the learning period, fast filling/emptying or turbulent surfaces can result in switching off and on the phase evaluation. Subsequently observed measurement errors will disappear as soon as tank levels come back to areas measured by Micropilot S previously with activated phase evaluation. If the observed measurement errors are correted by dip table entries, the Micropilot S will take care of these corrections and automatically adjust the index correction table. Do not correct any settings in the basic calibration or the extended calibration.

NOTICE

Immediately after installation, the Micropilot S measures with the specified mm-accuracy. Until the level range has been completely covered by the medium (setting up the correction table), the maximum permissible filling speed is 100 mm (3.94 in) level change / min. After this, the fill speed has no limitation.

Function "custody mode" (0A9)

On-site display	
custody mode	0A9
✔ inactive	
active pos.	
active neg.	

Meaning

This indicates the device calibration mode. The calibration mode (active) can be set using the hardware security lock on the electronics (→ 31).

Selection:
- inactive
- active pos.
- active neg.

active pos.

The custody mode (device is lead-sealed and accurate to the nearest mm) is active and is held.

active neg.

Custody mode (device is lead-sealed and accurate to the nearest mm) is activated and not held, e.g. because the signal-to-noise ratio is less than 5 dB (refer to function "**echo quality**" **(056)** in the function group "**extended calibr.**" **(05)**).

⚠ CAUTION

After entering all the values and completing mounting and aligning work, enter the Reset Code "555" in the function "reset" (0A3) to reset the device history for auto-correction or set history reset to "yes" in order to reset the device history for the auto-correction.

Dip table

The dip table is used to correct the level readings of the Micropilot S using independently taken hand dips. The dip table is used in particular to adapt the level gauge to the specific application conditions as mechanical offset and tank/stilling well design. Depending on national regulations, national inspectors will dip the tank at one to three levels during a calibration run and check the level readings. Only one value pair must be entered into the dip table to correct the measurement **offset**. If a second value pair is entered into the dip table, the Micropilot S accepts the corrected measured values identically for both value pairs. All other measured values are determined by linear extrapolation. If you enter more than two value pairs, the system carries out a linear interpolation between adjacent value pairs. Outside these value pairs, extrapolation is also linear.

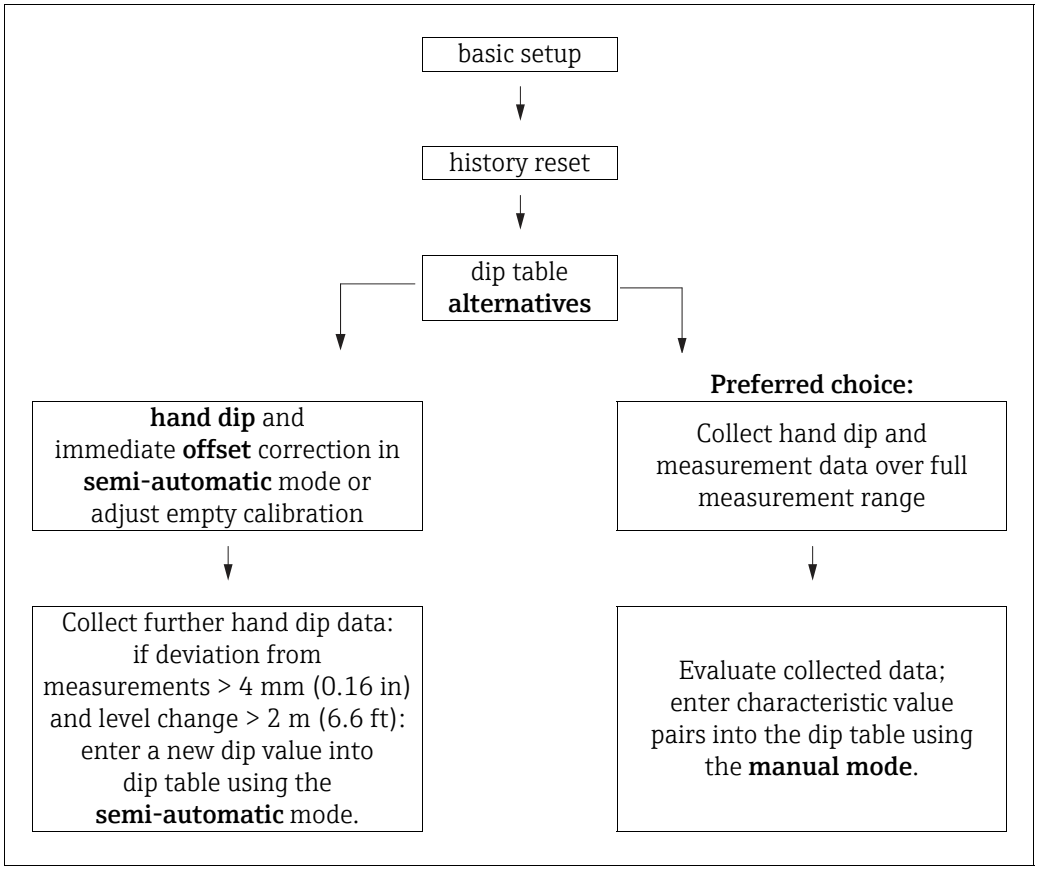

To collect and enter data into the dip table, two alternative procedures may be carried out. In order not to mix up measurement values corrected by the offset or linearisation of the dip table with uncorrected measurement values, it is recommended to use the semi-automatic mode of the dip table to enter new data pairs. In this case, the first dip value should be entered immediately after the basic calibration. Further linearization points should be entered only after a level change of at least 2 m (6.6 ft) (cf. upper figure, preferred choice) and a deviation between the "uncorrected measurement value" and the hand dip value of at least > 4 mm (0.16 in). If this procedure can not be followed, then **no** value pair should be entered into the dip table after basic calibration. Measurement data and hand dip values should be collected over the full measurement range and be evaluated with regard to a good linear fit. Only then characteristic value pairs should be entered into the dip table using the "manual mode" (cf. upper figure, right side).
If further linearisation is needed, further hand dip values should be entered **using only the "semi-automatic mode**".

NOTICE

Data handling during setup

- The offset should **not** be determined and entered within the close range of the antenna (conf. definition of the safety distance) or immediately in the range of the tank bottom, because within these ranges interferences of the radar signal may occur.
- The dip table can be printed out using FieldCare. Before doing this, FieldCare must be reconnected to the device in order to update the values within FieldCare.
- Make your inputs into the dip table in semi-automatic mode. We advise you to leave "**auto correction**" **(031)** activated while you enter your inputs.

⚠ CAUTION

After entering one or more points into the dip table, make sure that the dip table is activated and left in the "table on" dip table mode.

Function "dip table state" (037)

On-site display		Meaning
dip table state	037	This function displays the dip table status.
✔ table off		
table on		

Table on

Indicates whether the dip table is active.

Table off

Indicates whether the dip table is not active.

Function "dip table mode" (033)

On-site display	
dip table mode	033
✔ table off	
clear table	
view	

Meaning

The dip table can be switched on or off using this function.

Further options:
- Manual
- Semi-automatic
- Table on
- **Table off**
- Clear table
- View

Manual

The "manual mode" of the dip table can be used to enter collected data after a series of data pairs taken at different tank levels. The parameter "manual" in the "**dip table**" **(033)** function can be used to enter data pairs, which have been recorded at different levels, into the dip table. The measured value and the dip value can be entered.
- uncorrected measured value:
  This is the measured value supplied by the device, **not** corrected by the dip table.
  The choice of measured value, level or remaining fill height is dependent on the device setting.
- Dip value:
  This is the level or distance to flange respectively, given by the hand dip. This value should be used to correct the measured value.

NOTICE

The bigger the distance between the different levels while taking hand dips, the more accurate the linearisation of the dip table will be.

Semi-automatic

The value pairs in the dip table can be read. You can enter the dip value only. When there are new value pairs, the current uncorrected level or distance is accepted as the measured value.

Table on

The dip table is switched on.

Table off

The dip table is switched off.

Clear table

The complete dip table is deleted. The table is switched off.
The number of free table entries is set to the maximum value (**= 32**).

View

The value pairs in the dip table can **only** be read. You can still select this menu option, even if there is no dip table available. In this case, the number of free table entries is at maximum value (**= 32**).

Function "dip table" (034)

On-site display			
dip table			034
meas v.	40.000	m	
dip val	40.000	m	
remain.	32		

Meaning

This function edits measured variable. The number behind the entry "**remain**" indicates the current number of remaining free value pairs. The maximum number of value pairs is 32; after each entry, the remaining number is decremented.

NOTICE

The uncorrected measured value is displayed in the "dip table" (034) function. This may differ considerably from the measured values when a dip table is activated.

Function "dip table" (035)

On-site display			
dip table			034
meas v.	40.000	m	
dip val	40.000	m	
remain.	32		

Meaning

This function edits the dip value.

Function "dip table handl." (036)

On-site display	
dip table handl.	036
✔ new point	
edit point	
store point	

Meaning

Use this function to enter the dip value (level or distance) which will correct the measurement values.

Further options:
- **new point**
- edit point
- store point
- delete point
- return
- next point
- previous point

General procedure:

To enter a new point into the dip table, use
- **"new point"** to enter the value (pairs),
- **"store point"** to sort the new value (pairs),
- **"return"** to go to the dip table mode and
- **"table on"** to activate the dip table.

New point

You can enter a new point. Suggested values displayed for the measured value and dip value are the current uncorrected level or remaining fill height. The new value pair can be altered without selecting the "**edit point**" parameter. If the table is full, you can still select this parameter.
In this case, the number of free table entries stands at minimum value (**= 0**).

Edit point

The displayed value pair can be changed. Only the dip value can be changed with semi-automatic input mode.

⚠ CAUTION
To accept the value pair in the table, confirm it with "store point".

Store point

The displayed value pair is sorted in the table.

NOTICE
For sorting, the following criteria must be met:
- Measured variables may not be equal but have different dip values.
- A measured variable available in the table is recognised as equal when it is closer than 1 mm (0.04 in) to the sorting value.
- After successful sorting, the setting remains at "**edit point**" and the number of free table entries is decremented.

⚠ CAUTION
If the value cannot be sorted, the setting remains at the previous menu option. No warning or error message is generated. However, the number of remaining table entries is not decremented.

Delete point

The currently displayed point is deleted from the table. After deletion, the previous point is displayed. If the table only consisted of one point before deletion, then the current measured variable is displayed as a value pair.

Return

By selecting this point, you return to the function "**dip table mode**" **(033)**.

Next point

This scrolls down in the table. If the table is empty, you can still select this option. However, the displayed value does not change.

Previous point

This scrolls up in the table. If the table is empty, you can still select this option. However, the displayed value does not change.

⚠ CAUTION
After entering one or more points into the dip table, make sure that the dip table is activated in the "table on" dip table mode.

6.5.2 Envelope curve with device display VU331

After the basic setup, an evaluation of the measurement with the aid of the envelope curve ("**display" (09)** function group) is recommended).

Function "plot settings" (09A)

On-site display	
plot settings	09A
✔ envelope curve	
env. curve+FAC	
env. curve+cust.map	

Here you can select which information is shown on the display:
- **Envelope curve**
- Env. curve+FAC (for FAC see BA00217F/00/EN)
- Env. curve+cust.map (i.e. the tank map is also displayed)

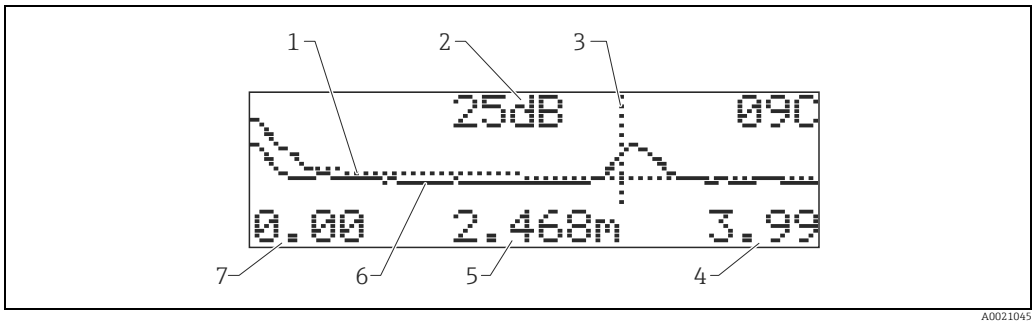

1 Tank map / FAC
2 Echo quality (S/N)
3 Marking of evaluated echo
4 End value of representation
5 Distance of current echo
6 Envelope curve
7 Begin value of representation

Function "recording curve" (09B)

This function determines whether the envelope curve is read as:
- **single curve** or
- cyclic

On-site display	
recording curve	09B
✔ single curve	
cyclic	

NOTICE

Data handling during setup

- If the envelope curve mode is active on the display, the measured values are updated in a slower cycle time. Thus, it is advisable to leave the envelope curve mode after the measuring point has been optimised.
- If the level of echo is very weak or there is a heavy interference echo, an **orientation** of the Micropilot can contribute to an optimisation of the measurement (increase of the level echo/reduction of the interference echo) ("Orientation of the Micropilot", → 74).

Function "envelope curve display"" (09C)

The envelope curve is displayed in this function. You can use it to obtain the following information:

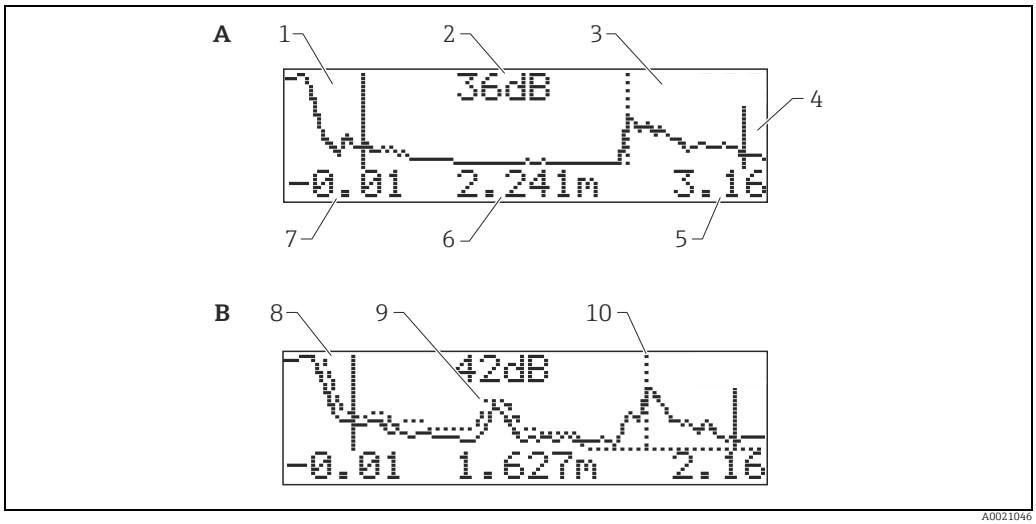

A Envelope curve only
B Envelope curve and interference echo suppression (map)
1 Full calibr.
2 Quality of evaluated echo
3 Evaluated echo is marked
4 Empty calibr.
5 Maximum distance of the plot
6 Distance of the evaluated echo
7 Minimum distance of the plot
8 Map
9 Interference echo
10 Level echo

6.6 Basic Setup with the Endress+Hauser operating program

To carry out the basic setup with the Endress+Hauser operating program, proceed as follows:
- Start the operating program and establish a connection.
- Select the "**basic setup**" function group in the navigation bar.

The following display appears on the screen:

Basic Setup step 1/5:

- Status image
- Enter the measuring point description (TAG number).

Each parameter that is changed must be confirmed with the **RETURN** key!

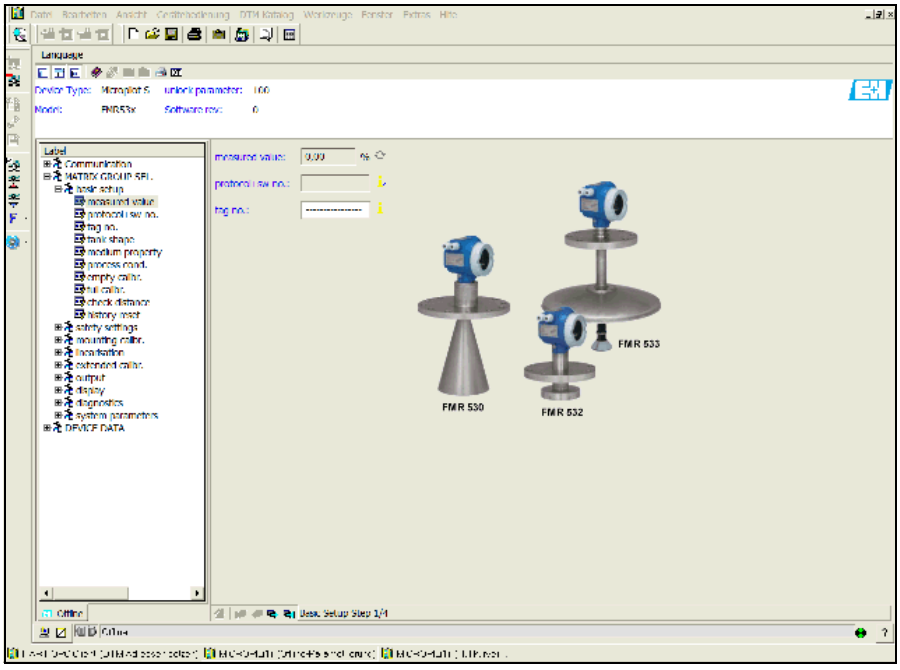

A0021199-EN

- The "**Next**" button moves you to the next screen display:

Basic Setup step 2/5:

- Enter the application parameters:
  - Tank shape
  - Medium property
  - Process cond.

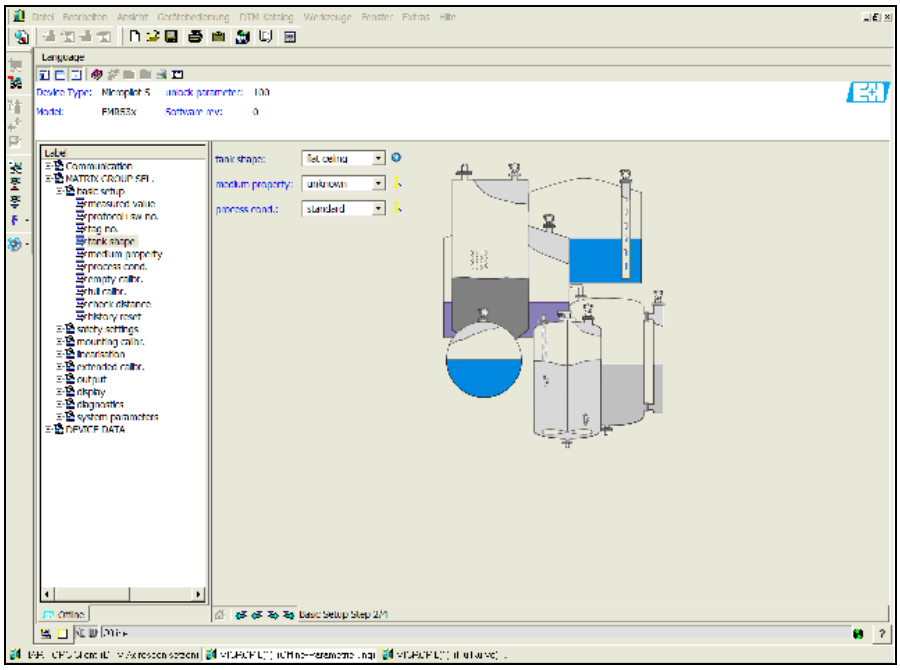

A0021200-EN

Basic Setup step 3/5:

If "**dome ceiling**" is selected in the "**tank shape**" function, the following display appears on the screen:

- Empty calibr.
- Full calibr.

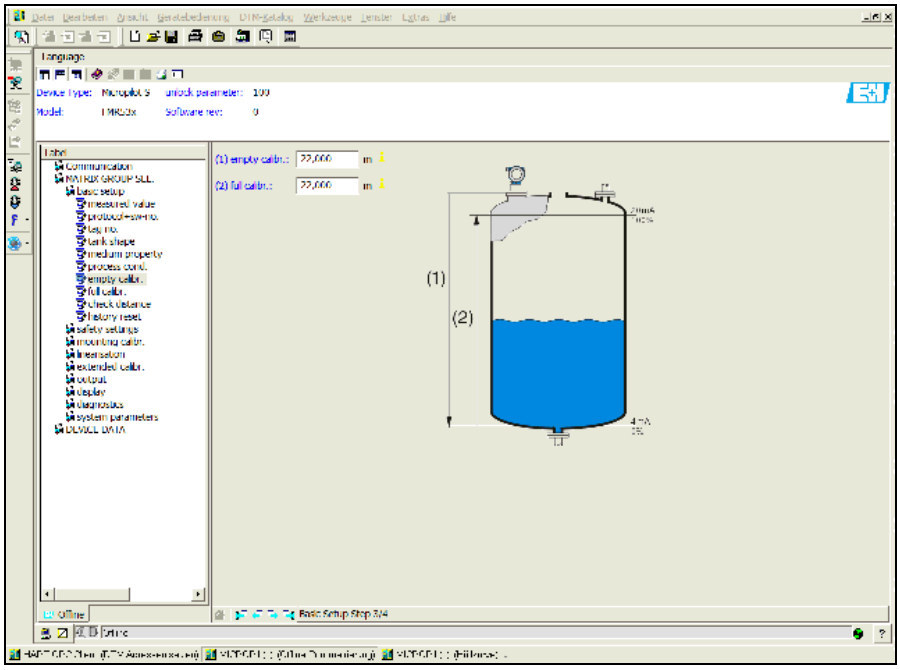

A0021201-EN

If "**horizontal cyl**" or "**sphere**" is selected in the "**tank shape**" function, the following display appears on the screen:
- Empty calibr.
- Full calibr.

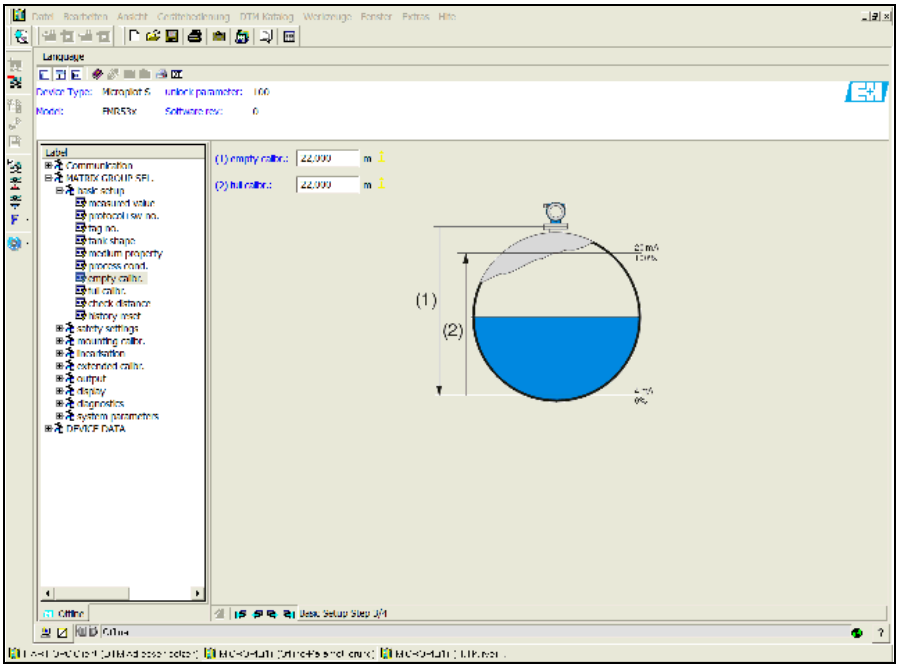

A0021202-EN

If "**stilling well**" or "**bypass**" is selected in the "**tank shape**" function, the following display appears on the screen:
- Empty calibr.
- Full calibr.
- Diameter of bypass / stilling well

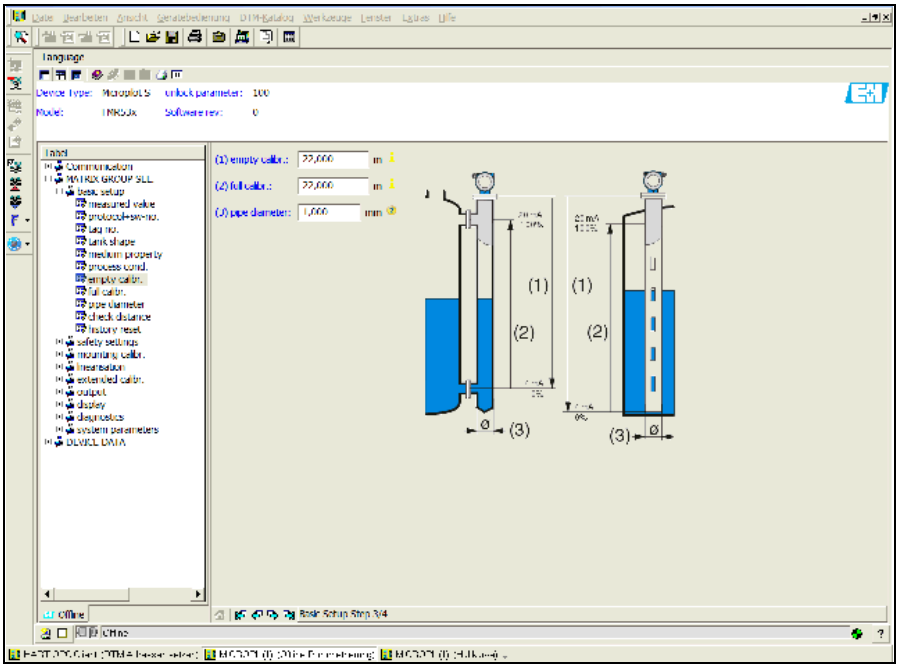

A0021203-EN

NOTICE
You must also specify the pipe diameter in this display.

If "**flat ceiling**" is selected in the "**tank shape**" function, the following display appears on the screen:
- Empty calibr.
- Full calibr.

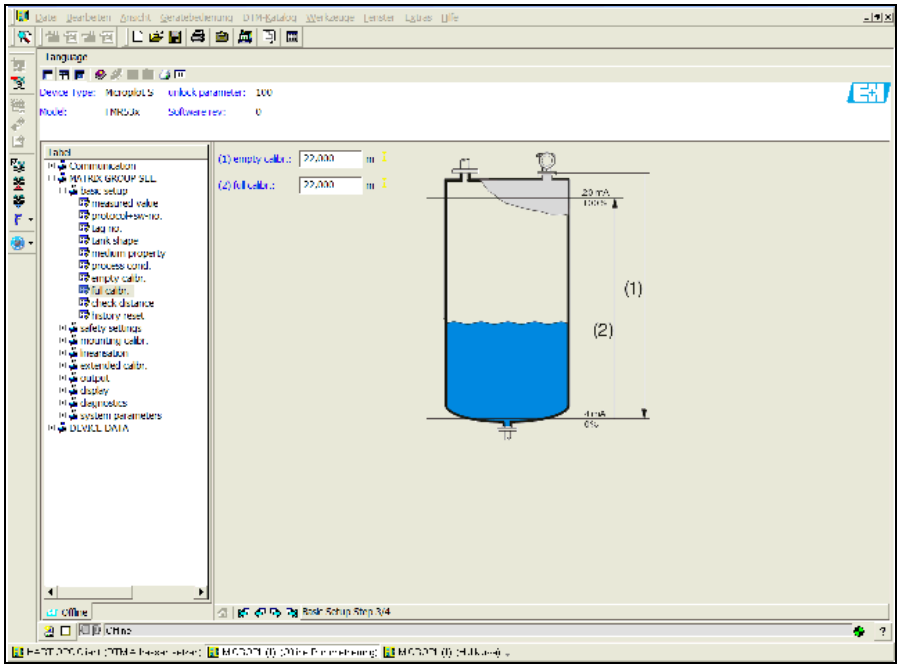

A0021204-EN

Basic Setup step 4/5:

- This step starts the tank mapping.
- The measured distance and the current measured value are always displayed in the header.
- A description is given, → 49.

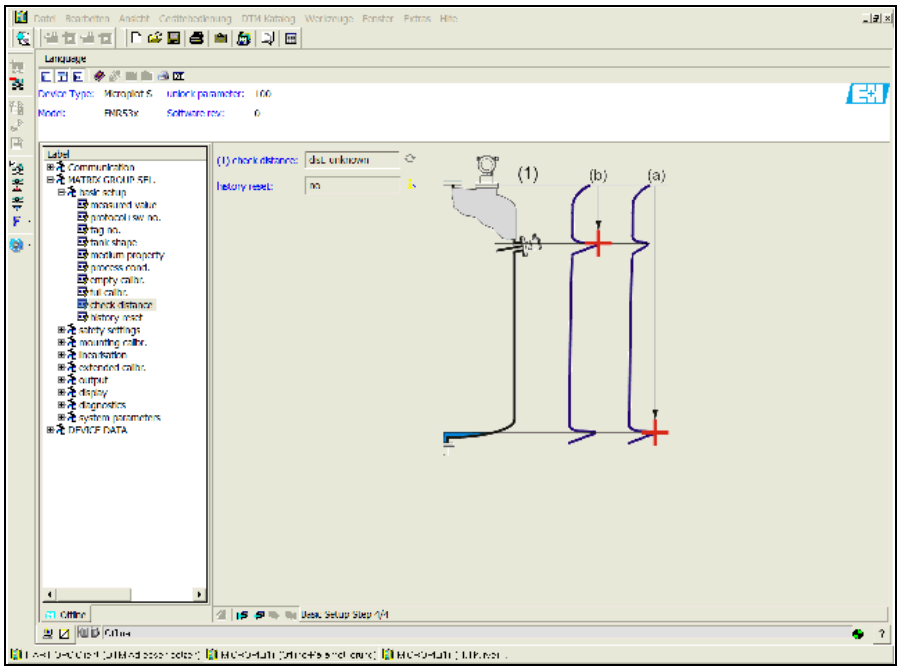

A0021205-EN

Basic Setup step 5/5:

After the first installation of the device, initialise the index correction table. To do so set the history reset to "**yes**".

6.6.1 Signal analysis via envelope curve

After the basic setup, an evaluation of the measurement using the envelope curve is recommended.

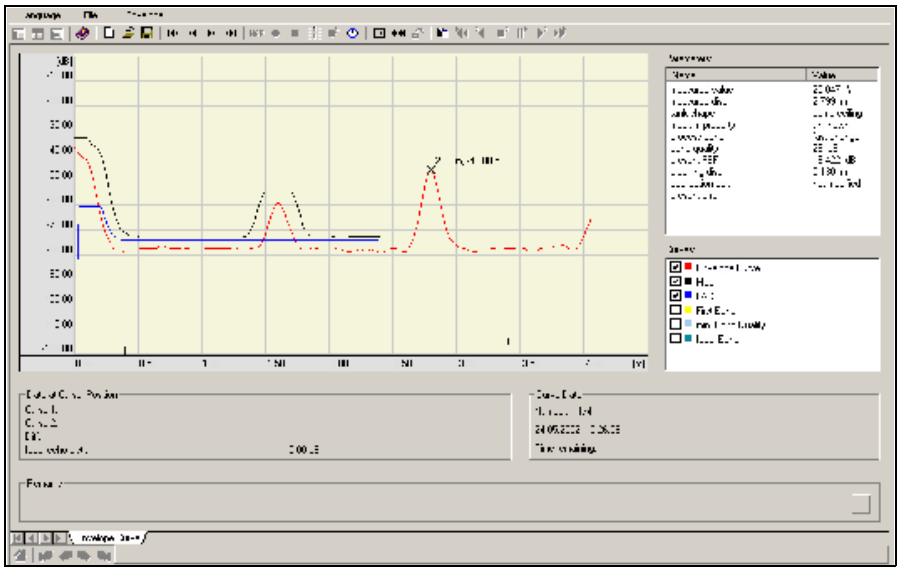

A0021206-EN

NOTICE

If the level of echo is very weak or there is a heavy interference echo, an orientation of the Micropilot can help optimise the measurement (increase of the useful echo/ reduction of the interference echo).

6.6.2 User-specific applications (operation)

For details of setting the parameters of user-specific applications, see separate documentation BA00217F/00/EN "Description of Instrument Functions" on the enclosed CD-ROM.

6.7 Mounting calibration with the Endress+Hauser operating program

To carry out the mounting calibration with FieldCare, proceed as follows:
- Start FieldCare and establish a connection.
- Select the "**mounting calibr.**" function group in the navigation bar.

The following display appears on the screen:

Mounting calibration step 1/2:
- Auto correction
- Pipe diam. corr.

Each parameter that is changed must be confirmed with the **RETURN** key!

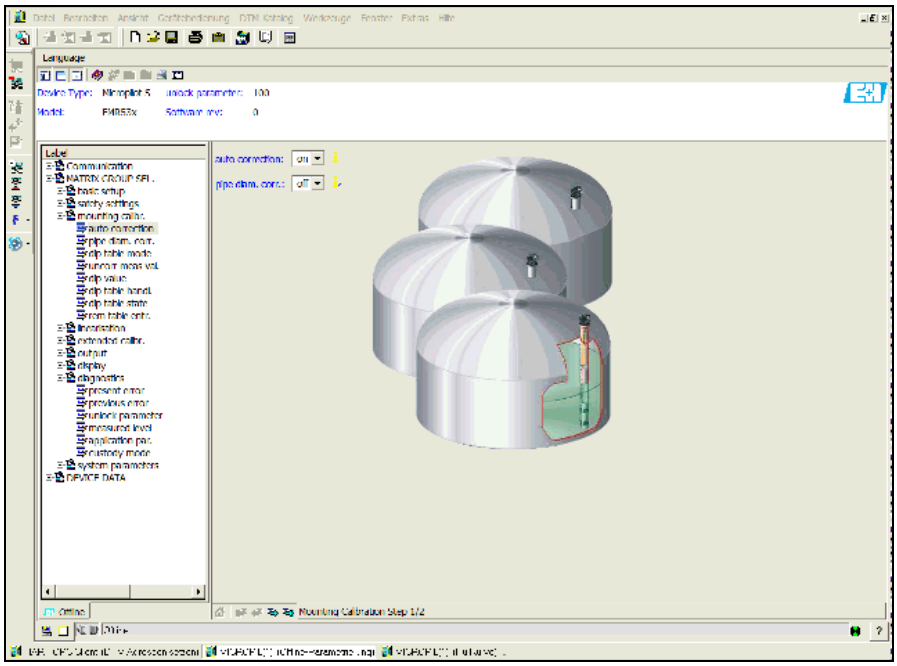

A0021207-EN

- The "**Next**" button moves you to the next screen display:

Mounting calibration step 2/2:
- dip table mode
- meas. v.
- dip value
- dip table handl.
- dip table state
- left dip t.entr.

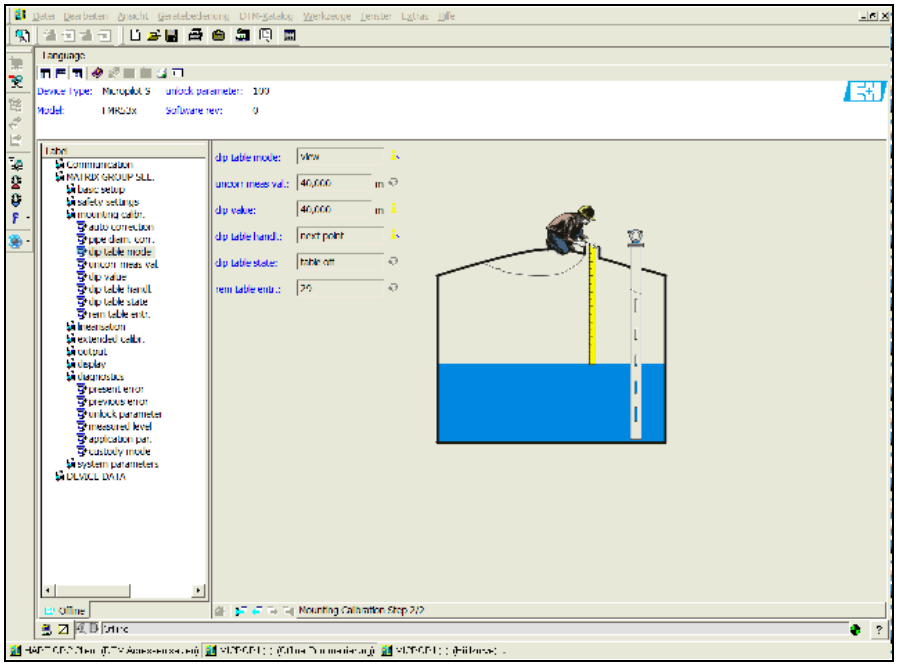

A0021208-EN

7 Maintenance

The Micropilot S measuring device requires no special maintenance.

7.1 Exterior cleaning

When cleaning the exterior of measuring devices, always use cleaning agents that do not attack the surface of the housing and the seals.

7.2 Replacing seals

The process seals of the sensors must be replaced periodically, particularly if molded seals (aseptic construction) are used. The period between changes depends on the frequency of cleaning cycles and on the temperature of the measured product and the cleaning temperature.

7.3 Repair

The Endress+Hauser repair concept assumes that the measuring devices have a modular design and that customers are able to undertake repairs themselves ("Spare parts", → 76). Please contact Endress+Hauser Service for further information on service and spare parts.

7.4 Repairs to Ex-approved devices

When carrying out repairs to Ex-approved devices, please note the following:
- Repairs to Ex-approved devices may only be carried out by trained personnel or by Endress+Hauser Service.
- Comply with the prevailing standards, national Ex-area regulations, safety instructions (XA) and certificates.
- Only use original spare parts from Endress+Hauser.
- When ordering a spare part, please note the device designation on the nameplate. Only replace parts with identical parts.
- Carry out repairs according to the instructions. On completion of repairs, carry our the specified routine test on the device.
- Only Endress+Hauser Service may convert a certified device into a different certified variant.
- Document all repair work and conversions.

7.5 Replacement

After a complete Micropilot or electronic module has been replaced, the parameters can be downloaded into the device again via the communication interface. Prerequisite to this is that the data were uploaded to the PC beforehand using the FieldCare.
Measurement can continue without having to carry out a new setup.

- You may have to activate linearisation (see BA00217F/00/EN on the enclosed CD-ROM).)
- You may need to record the tank map again (see Basic Setup)

After an antenna component or electronic has been replaced, a new calibration must be carried out. This is described in the repair instructions.

8 Accessories

A variety of accessories is available for the Micropilot S. They can be ordered separately from Endress+Hauser.

8.1 Weather protection cover

A weather protective cover made of stainless steel is available for outdoor mounting (order code: 543199-0001). The shipment includes the protective cover and tension clamp.

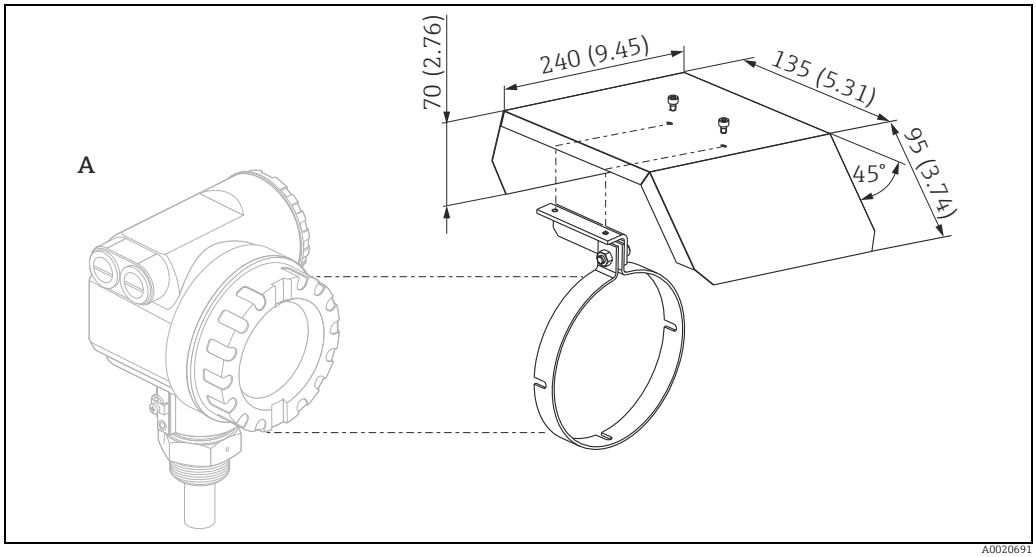

A T12 housing

8.2 Commubox FXA195 HART

For intrinsically safe communication with FieldCare via the USB interface.
For details refer to TI00404F/00/EN.

8.3 Commubox FXA291

The Commubox FXA291 connects Endress+Hauser field devices with CDI interface (= Endress+Hauser Common Data Interface) to the USB interface of a personal computer or a notebook. For details refer to TI00405C/07/EN.

For the device you need the "ToF Adapter FXA291" as an additional accessory.

8.4 ToF Adapter FXA291

The ToF Adapter FXA291 connects the Commubox FXA291 via the USB interface of a personal computer or a notebook to the device. For details refer to KA00271F/00/A2.

8.5 Field Xpert

Compact, flexible and robust industry handheld terminal for remote parametrization and measured value inspection via the HART output or via FOUNDATION Fieldbus.
For details refer to Operating Instructions BA00060S/04/EN.

9 Trouble-shooting

9.1 Trouble-shooting instructions

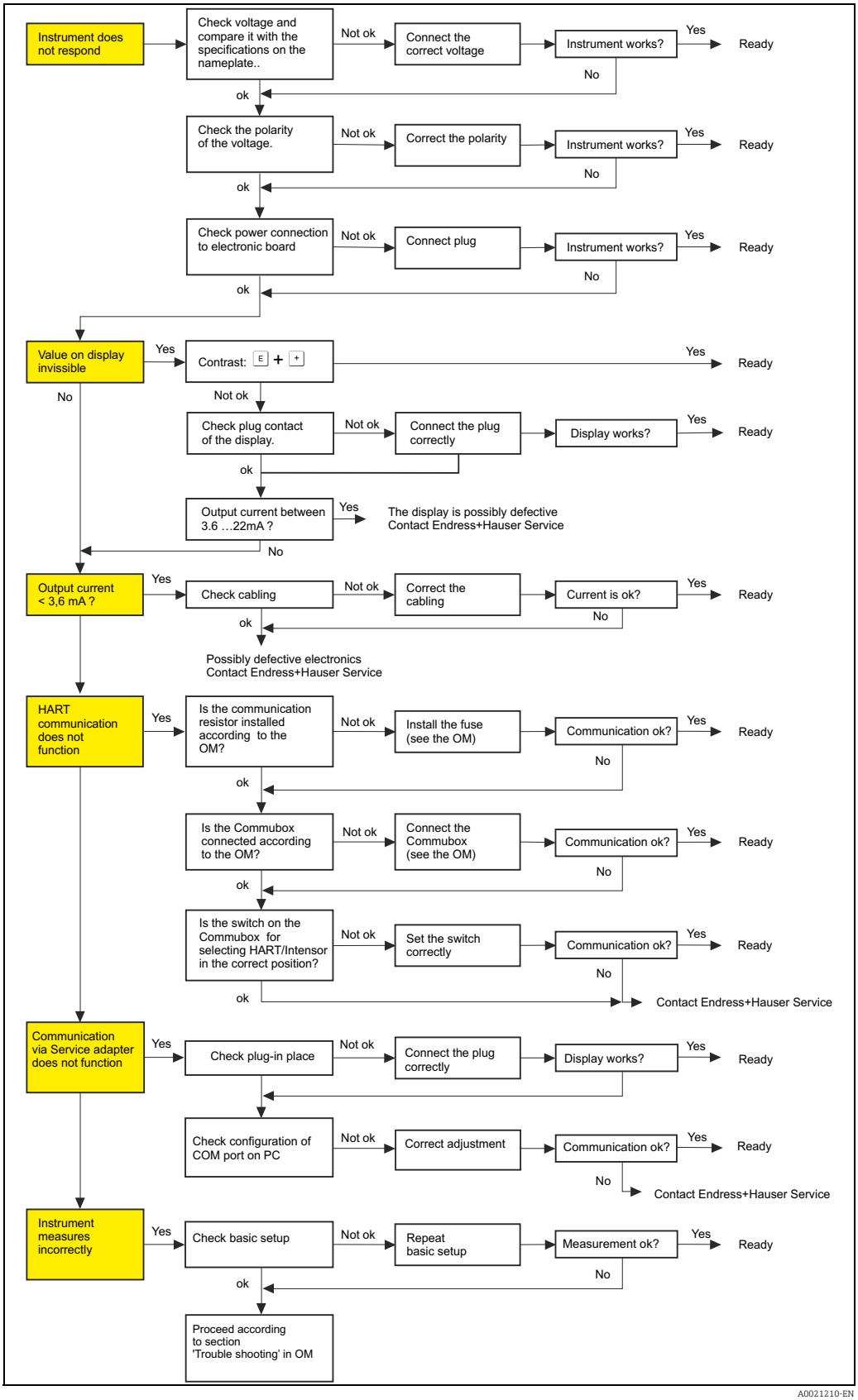

A0021210-EN

9.2 System error messages

Code	Description	Possible cause	Remedy
A102	checksum error general reset & new calibr.required.	device has been powered off before data could be stored; emc problem EEPROM defect	reset avoid emc problem; if alarm prevails after reset, exchange electronics
W103	initialising - please wait	EEPROM storage not yet finished	wait some seconds; if warning prevails, exchange electronics
A106	downloading please wait	processing data download	wait until warning disappears
A110	checksum error general reset & new calibr.required.	device has been powered off before data could be stored emc problem EEPROM defect	Reset avoid emc problem; if alarm prevails after reset, exchange electronics
A111	electronics defect	RAM defect	Reset if alarm prevails after reset, exchange electronics
A113	electronics defect	RAM defect	Reset if alarm prevails after reset, exchange electronics
A114	electronics defect	EEPROM defect	Reset if alarm prevails after reset, exchange electronics
A115	electronics defect	general hardware problem	Reset if alarm prevails after reset, exchange electronics
A116	download error repeat download	checksum of stored data not correct	restart download of data
A121	electronics defect	no factory calibration existant EEPROM defective	contact service
W153	initialising - please wait	initialisation of electronics	wait some seconds; if warning prevails, power off device and power on again
A155	electronics defect	hardware problem	Reset if alarm prevails after reset, exchange electronics
A160	checksum error general reset & new calibr.required	device has been powered off before data could be stored emc problem EEPROM defect	Reset avoid emc problem; if alarm prevails after reset, exchange electronics
A164	electronics defect	hardware problem	Reset if alarm prevails after reset, exchange electronics
A171	electronics defect	hardware problem	Reset if alarm prevails after reset, exchange electronics
A231	sensor 1 defect check connection	HF module or electronics defective	exchange electronics
A270	custody switch undefcheck position	switch for custody transfer may be defective	check position of custody switchexchange electronics
#	mm - accuracy not ensured	inconsistency between phase and amplitude evaluation inconsistent microfactor inconsistent index mapping	check basic calibrationcheck mounting calibrationcheck echo quality > 10 dB history reset
A272	electronics defect amplifier	inconsistency in amplification	exchange electronics

Code	Description	Possible cause	Remedy
W275	electronics defect factory setting	offset drift of A/D commuter	exchange electronics
W511	no factory calibration ch1	factory calibration has been deleted	record new factory calibration
A512	recording of mapping please wait	mapping active	wait some seconds until alarm disappears
W601	linearisation ch1 curve not monotone	linearization not monotonously increasing	correct linearisation table
W611	less than 2 linearisation points for channel 1	number of entered linearization points < 2	correct linearisation table
W621	simulation ch. 1 on	simulation mode is active	switch off simulation mode
E641	check calibr	echo lost due to application conditions of built up on antenna Antenna defect	check installation optimize orientation of antenna clean antenna (cf. OM)
E651	- risk of overspill	level in safety distance	alarm will disappear as soon as level leaves safety distance.
A671	linearisation ch1 not complete, not usable	linearisation table is in edit mode	activate linearisation table
W681	current ch1 out of range	current out of range 3,8 mA to 20.5 mA	check calibration and linearisation

9.3 Application errors

Error	Output	Possible cause		Remedy
A warning or alarm has occurred	Depending on the configuration	See table of error messages (→ 70)		1. See table of error messages (→ 70)
Measured value (00) is incorrect	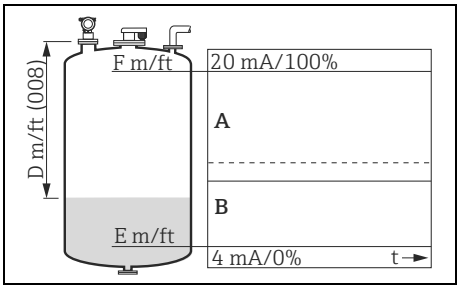 *A Expected B Actual*	Measured distance (008) OK?	yes →	1. Check empty calibr. (005) and full calibr (006). 2. Check linearisation: → level/ullage (040) → max. scale (046) → diameter vessel (047) → Check table 3. Check dip table
		no ↓		
		Measurement in bypass or stilling well?	yes →	1. Is bypass or stilling well selected in tank shape? 2. Is the pipe diameter (007) correct? 3. Pipe diameter correction (032) activated?
		no ↓		
		Is "offset" (057) active?	yes →	1. offset (057) correctly set?
		no ↓		
		An interference echo may have been evaluated.	yes →	1. Carry out tank mapping → basic setup 2. Activate auto correction (031)
No change off measured value on filling/emptying	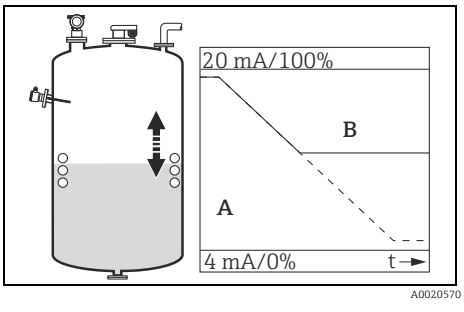 *A Expected B Actual*	Interference echo from installations, nozzle or extension on the antenna		1. Carry out tank mapping → basic setup 2. If necessary, clean antenna 3. If necessary, select better mounting position (→ 11)

Error	Output	Possible cause		Remedy
During filling/ emptying the measured value jumps sporadically to a higher/lower level	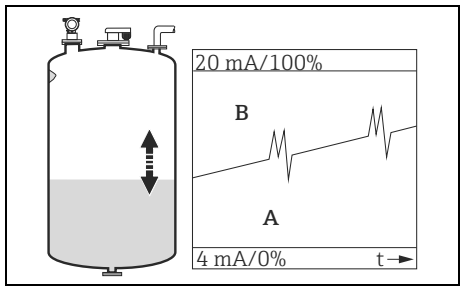 *A Expected B Actual*	During definition of the auto correction table the device has been switched off and the level has changed.		1. Reset "555" 2. Iff possible, do not switch off the device before the complete measuring range has been passed through.
During filling/ emptying the measured value jumps downwards	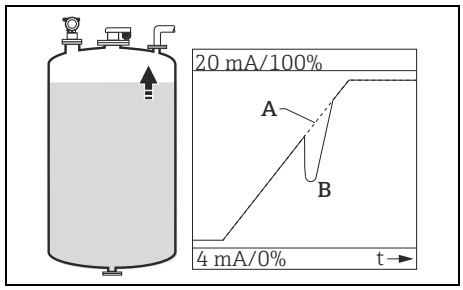 *A Expected B Actual*	Multiple echoes	yes →	1. Check the tank shape (002), e.g. "dome ceiling" or "horizontal cyl" 2. In the range of the blocking dist. (059) there is no echo evaluation → Adapt the value 3. If possible, do not select central installation position (→ 11) 4. Activate auto correktion (031)
E641 ((loss ofecho)	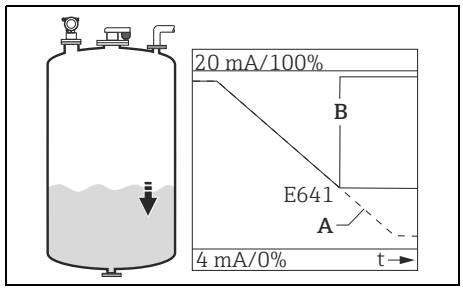 *A Expected B Actual*	Level echo is tooweak. Possible causes: ▪ Rough surface dueto filling/emptying ▪ Agitator running ▪ Foam	yes →	1. Check application parameters (002), (003) and (004) 2. If necessary, select a better installation position and/or larger antenna (→ 11)
E641 (loss of echo) after turn on the power supply	**If the device is configured to Hold by loss of echo the output is set to any value/current.**	noise level during the initialization phase too high.		Repeat once more empty calibr. (005). **⚠ CAUTION** **Before conformation change with ⊞ or ⊟ to the edit mode.**

9.4 Orientation of the Micropilot

For orientation a marker is found on the flange or threaded boss of the Micropilot. During installation this must be oriented (→ 16):
After commissioning the Micropilot, the "**echo quality**" **(056)** indicates whether a sufficiently large measuring signal is obtained. If necessary, the quality can be optimised later. Vice versa, the presence of an interference echo can be used to minimise this by optimum orientation. The advantage of this is that the subsequent tank mapping uses a somewhat lower level that causes an increase in the strength of the measuring signal. Proceed as follows:

⚠ WARNING

Subsequent alignment can lead to personal injury. Before you unscrew or loosen the process connection, make sure that the vessel is not under pressure and does not contain any injurious substances.

1. It is best to empty the container so that the bottom is just covered. However, alignment can be carried out even if the vessel is empty.
2. Optimisation is best carried out with the aid of the envelope graph in the display or in FieldCare.
3. Unscrew the flange or loosen the threaded boss by a half a turn.
4. Turn the flange by one hole or screw the threaded boss by one eighth of a turn. Note the echo quality.
5. Continue to turn until 360° is reached.
6. Optimum alignment:

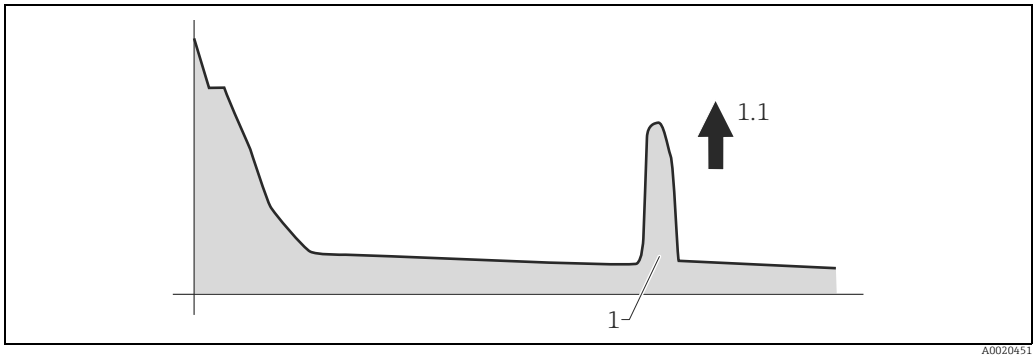

Vessel partly full, no interference echo obtained

1 Level echo
1.1 Level echo: highest value

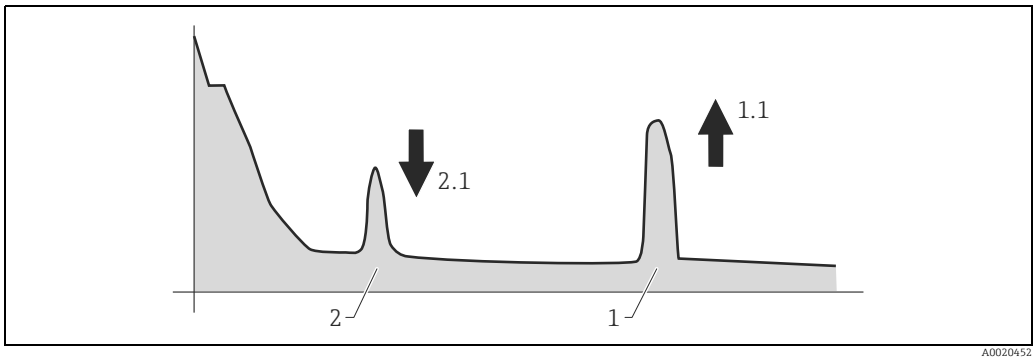

Vessel partly full, interference echo obtained

1 Level echo
1.1 Level echo: highest value
2 False echo
2.1 False echo: smallest value

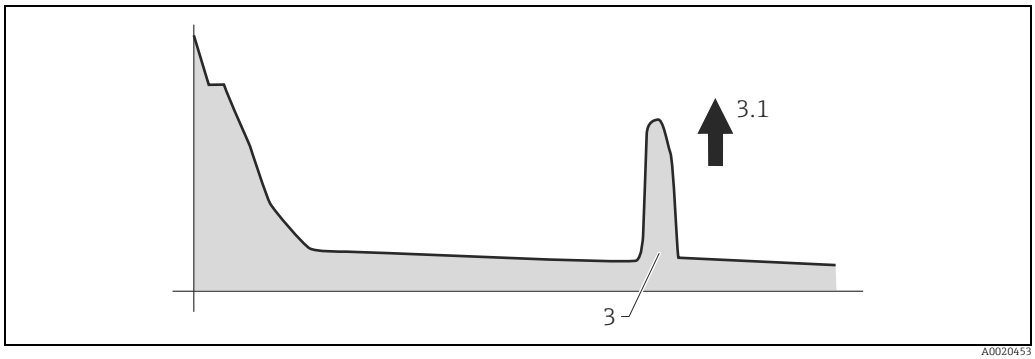

Vessel empty, no interference echo

3 Echo tank bottom
3.1 Echo: highest value

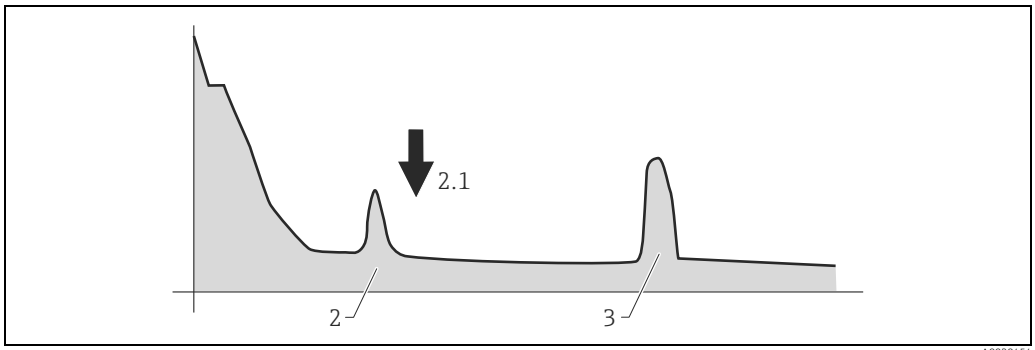

Vessel empty, interference echo obtained

2 False echo
2.1 False echo: smallest value
3 Echo tank bottom

7. Fix the flange or threaded boss in this position. If necessary, replace the seal.
8. Carry out tank mapping, → 49.

9.5 Spare parts

- A few interchangeable measuring device components are identified by a spare part nameplate.This contains information about the spare part.
- The connection compartment cover of the device contains a spare part nameplate that includes the following information:
  - A list of the most important spare parts for the measuring device, including their orderinginformation.
  - The URL for the W@M Device Viewer (www.endress.com/deviceviewer):
    There, all spare parts for the measuring device are listed, including the order code, and can be ordered. If available, the corresponding Installation Instructions can also be downloaded there.

Measuring device serial number:
- Is located on the device and spare part nameplate.
- Can be read out via the "Serial number" parameter in the "Device information" submenu..

9.6 Return

The following procedures must be carried out before a transmitter is sent to Endress+Hauser e.g.for repair or calibration:
- Remove all residue which may be present. Pay special attention to the gasket grooves and creviceswhere fluid may be present. This is especially important if the fluid is dangerous to health, e.g.corrosive, poisonous, carcinogenic, radioactive, etc.
- Always enclose a duly completed "Declaration of contamination" form. Only then can Endress+Hauser transport, examine and repair a returned device.
- Enclose special handling instructions if necessary, for example a safety data sheet as per EN 91/155/EEC.

Additionally specify:
- The chemical and physical characteristics of the product
- An exact description of the application
- A short description of the error that occurred (specify error code if possible)
- Operating time of the device.

9.7 Disposal

In case of disposal please seperate the different components according to their material consistence.

9.8 Software history

Date	Software-version	Software changes	Documentation changes
12.2000	V 01.00.00	Original software. Operated via: – ToF Tool from version 1.5 – Commuwin II (from version 2.05.03) – HART-Communicator DXR375 with Rev. 1, DD 1.	
03.2002	V 01.02.00	simplified commissioning history reset in basic calibration ▪ Function group: envelope curve display ▪ Katakana (japanese) Operated via: – ToF Tool (V 3.0) – Commuwin II (from version 2.05.03) – HART-Communicator DXR375 with Rev. 1, DD 1.	Description of Instrument Functions
06.2005	V 01.02.02	Function "echo lost" improved Operated via: – Fieldcare – ToF Tool (from V 3.0) – HART-Communicator DXR375 with Rev. 1, DD 1.	
04.2009	V 01.03.00	Enhanced phase evaluation	

9.9 Contact addresses of Endress+Hauser

Contact addresses can be found on our homepage: www.endress.com/worldwide.
If you have any questions, please do not hesitate to contact your Endress+Hauser representative.

10 Technical data

10.1 Additional technical data

For the technical data, please refer to the Technical Information TI01123F/00/EN

10.1.1 Supplementary Documentation

Supplementary Documentation

- System Information Micropilot (SI00019F/00/EN)
- Technical Information (TI01123F/00/EN)
- Operating Instructions "Description of Instrument functions" (BA00217F/00/EN)
- Certificate "German WHG" (ZE00243F/00/DE)

11 Appendix

11.1 Operating menu HART (Display modul)

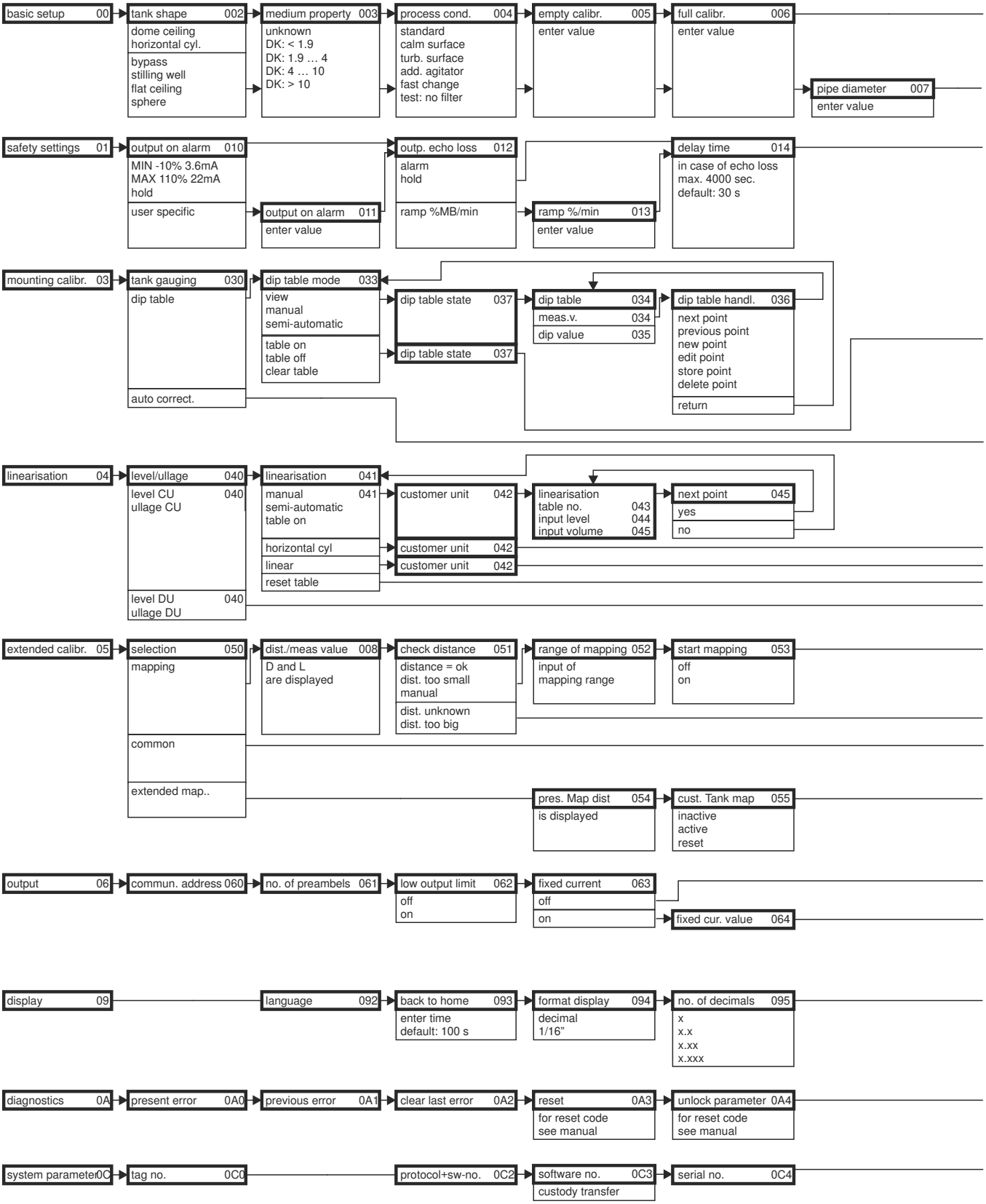

Note! The default values of the parameters are typed in boldface.

A0021177-EN

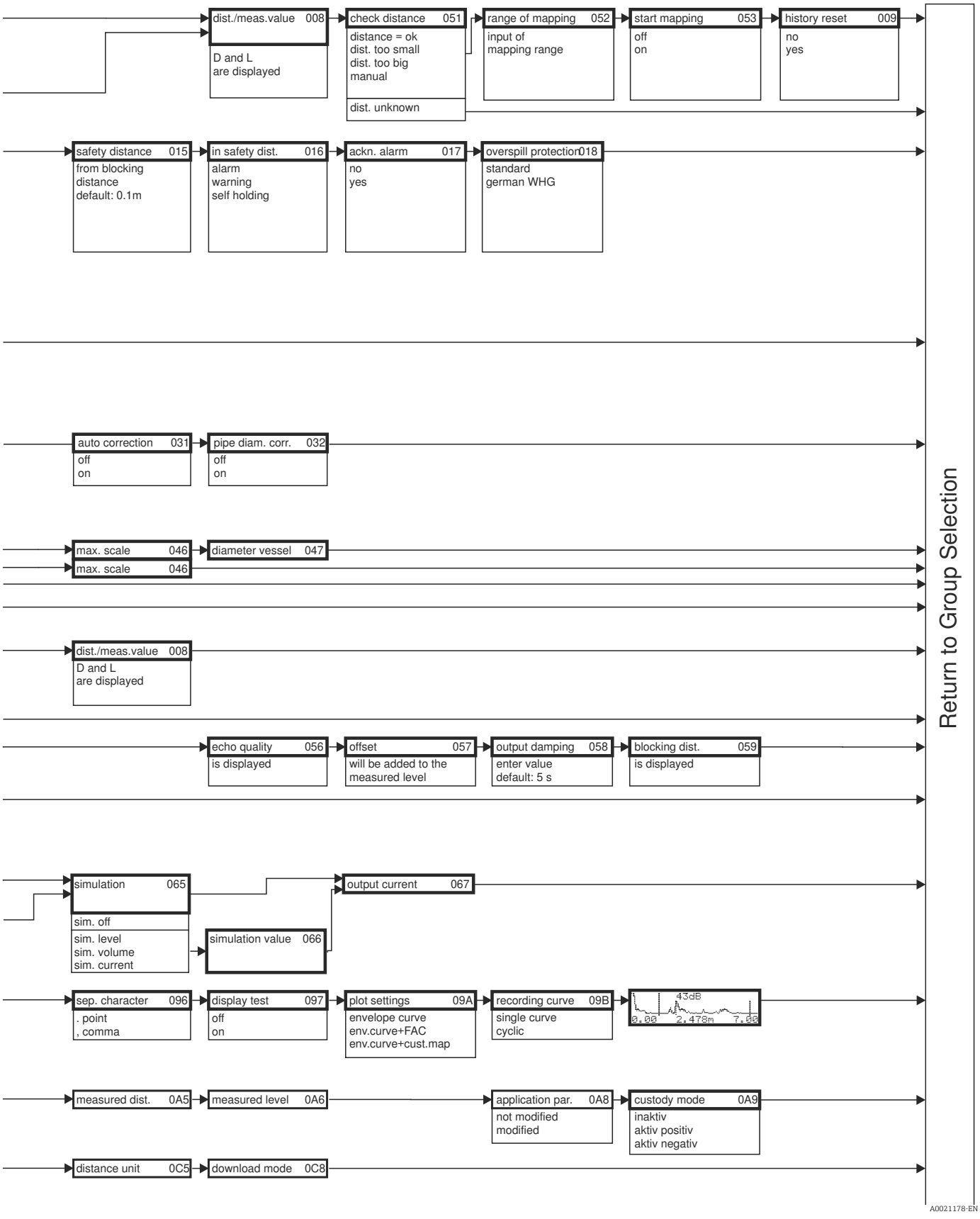
dist./meas.value 008
D and L
are displayed
check distance 051
distance = ok
dist. too small
dist. too big
manual
dist. unknown
range of mapping 052
input of
mapping range
start mapping 053
off
on
history reset 009
no
yes
safety distance 015
from blocking
distance
default: 0.1m
in safety dist. 016
alarm
warning
self holding
ackn. alarm 017
no
yes
overspill protection 018
standard
german WHG
auto correction 031
off
on
pipe diam. corr. 032
off
on
max. scale 046
max. scale 046
diameter vessel 047
dist./meas.value 008
D and L
are displayed
echo quality 056
is displayed
offset 057
will be added to the
measured level
output damping 058
enter value
default: 5 s
blocking dist. 059
is displayed
simulation 065
sim. off
sim. level
sim. volume
sim. current
simulation value 066
output current 067
sep. character 096
. point
, comma
display test 097
off
on
plot settings 09A
envelope curve
env.curve+FAC
env.curve+cust.map
recording curve 09B
single curve
cyclic
43dB
0.00
2.478m
7.00
measured dist. 0A5
measured level 0A6
application par. 0A8
not modified
modified
custody mode 0A9
inaktiv
aktiv positiv
aktiv negativ
distance unit 0C5
download mode 0C8
Return to Group Selection
A0021178-EN

11.2 Integrated in tank gauging system

The Endress+Hauser Tank Side Monitor NRF590 provides integrated communications for sites with multiple tanks, each with one or more sensors on the tank, such as radar, spot or average temperature, capacitive probe for water detection and/or pressure sensors. Multiple protocols out of the Tank Side Monitor guarantee connectivity to nearly any of the existing industry standard tank gauging protocols. Optional connectivity of analog 4...20 mA sensors, digital I/O and analog output simplify full tank sensor integration. Use of the proven concept of the intrinsically safe HART bus (HART multidrop) for all on-tank sensors yields extremely low wiring costs, while at the same time providing maximum safety, reliability and data availability.

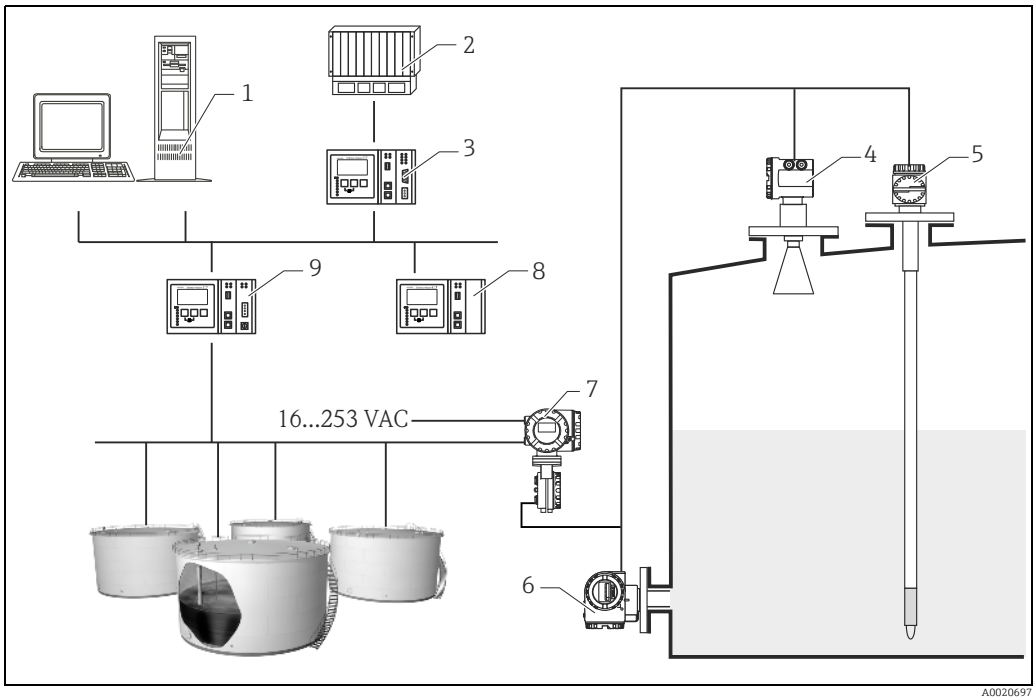

1 Tankvision workstation
2 DCS
3 Host Link
4 Micropilot S
5 Prothermo
6 Pressure
7 Tank Side Monitor
8 Data Concentrator
9 Tankvision Tank Scanner NXA820

Index

A
Accessories 68
Alarm 32, 37
Allignment 65
Application errors 72

B
Basic setup 42, 44, 61
Beam angle 12

C
Cable entry 25
CE mark 9
Commissioning 41
Commubox 27, 68
Connection 27
Current consumption 25
Custody locking switch 33

D
Declaration of conformity 9
Declaration of contamination 76
Degree of protection 28
Designated use 4
Dip table 54
Display 31
Disposal 77
Distance 42, 48–49

E
Echo quality 74–75
Empty calibration 42, 47
Engineering hints 11
Envelope curve 59, 65
Equipotential bonding 28
Error messages 37
Exterior cleaning 67

F
Field Communicator 475 27
Field Xpert 68
Field Xpert SFX 27
FieldCare 61, 65, 80
Full calibration 42, 48
Function groups 30
Functions 30

G
Green LED 32

H
Hardware lock 34
Hardware unlock 35
HART 27, 38

I
Installation in tank (free space) 16
Interference echo 74
Interference echo suppression 64

K
Key assignment 33

L
Level 42

M
Maintenance 67
Mapping 49–50
Measuring conditions 13
Media group 14
Medium properties 45
Mounting 10

N
Nameplate 7

O
Operating menu 29, 80
Operating menus 30
Operation 29, 34
Operational safety and process safety 4
Optimierung 74
Orientation 74

P
Power consumption 25
Process conditions 46, 62

R
Red LED 32
Repair 67
Repairs to Ex- approved devices 67
Replacement 67
Reset 36
Return 76
RN221N 27

S
Safety conventions and symbols 5
Safety distance 42
Service Interface FXA291 68
Software history 77
Supply voltage 25
System error messages 70

T
T12 housing 24
Tag 62
Tank installations 11
Tank shape 44
Technical data 78
Touble-shooting 69
Turn housing 10, 18

U
Unlock parameter 34–35

V
VU331 . . . . . 44, 59

W
Warning 37
Weather protection cover 68
Wiring 23



www.addresses.endress.com

Endress+Hauser

People for Process Automation