Level Pressure Flow Temperature Liquid Analysis Registration Systems Components Services Solutions

Operating Instructions

Levelflex M FMP43

Guided Level-Radar

HART COMMUNICATION PROTOCOL

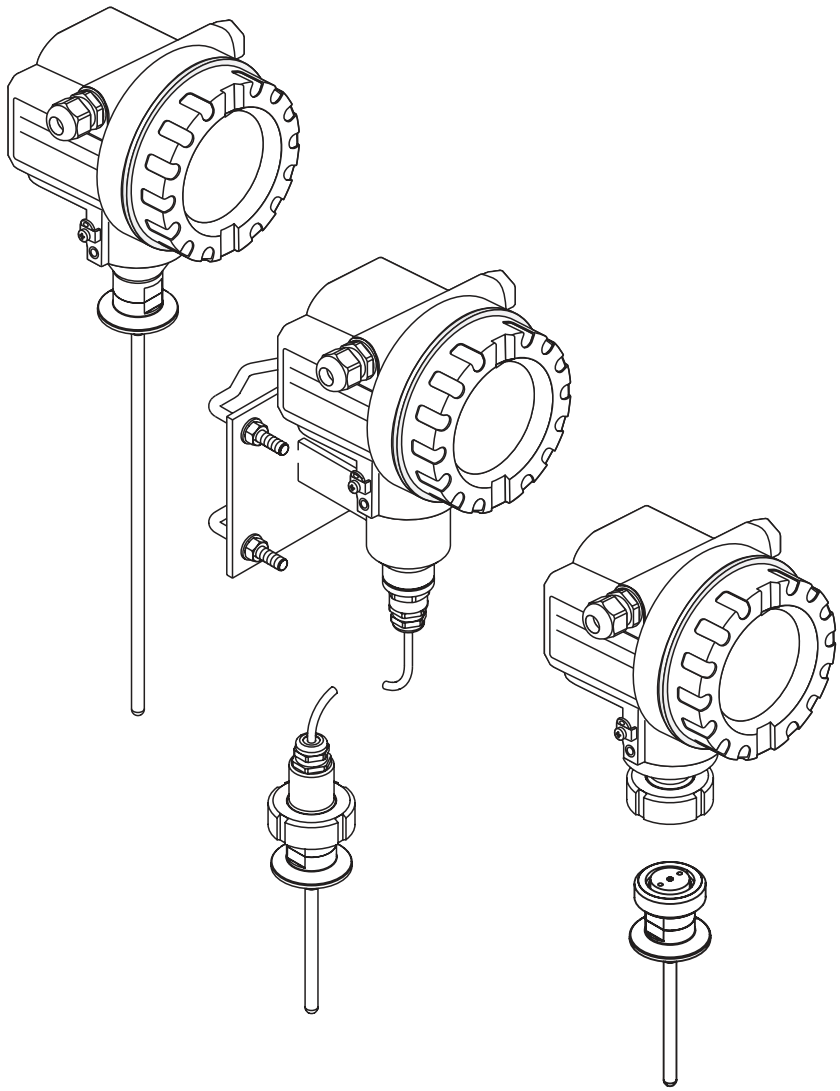

BA00357F/00/EN/13.10
71120304

Valid as of software version:
01.04.zz

Endress+Hauser
People for Process Automation

Brief Operating Instructions

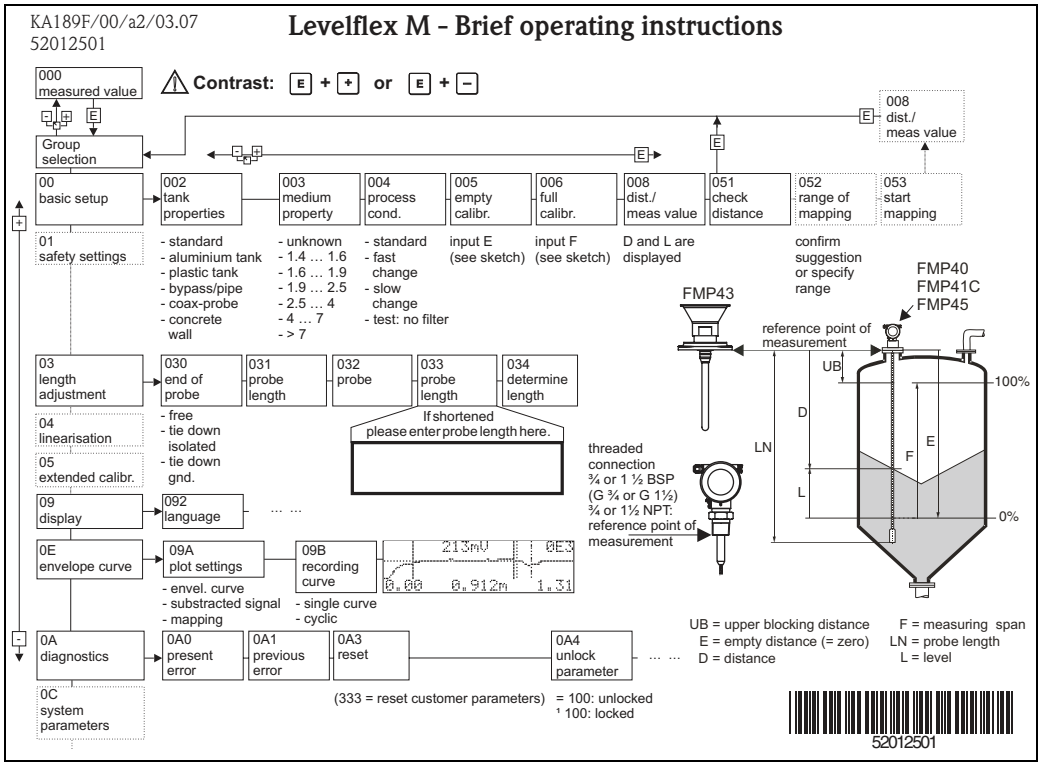

Note!
These Operating Instructions explains how to install and commission the level transmitter. All the functions that are required for a typical measuring task are taken into account here. In addition, the Levelflex M has many other functions for optimizing the measuring point and conventing measured values. These functions are not included in these Operating Instructions.

An **overview of all the device functions** can be found on → 82.

The Operating Instructions BA00245F/00/EN "Description of Instrument Functions" provides an **extensive description of all the device functions** which can be found on the enclosed CD-ROM.

The Operating Instructions can also be found on our homepage: www.endress.com

Table of contents

1 Safety instructions 4

1.1 Designated use 4
1.2 Installation, commissioning and operation 4
1.3 Operational safety and process safety 4
1.4 Notes on safety conventions and icons 5

2 Identification 6

2.1 Device designation 6
2.2 Scope of delivery 8
2.3 Certificates and approvals 8
2.4 Registered trademarks 8

3 Installation 9

3.1 Incoming acceptance, transport, storage 9
3.2 Installation conditions 10
3.3 Installation instructions 15
3.4 Post-installation check 20
3.5 Cleaning of the probe 21

4 Wiring 24

4.1 Quick wiring guide 24
4.2 Connecting the measuring unit 26
4.3 Recommended connection 29
4.4 Degree of protection 29
4.5 Post-connection check 29

5 Operation 30

5.1 Quick operation guide 30
5.2 Display and operating elements 32
5.3 Local operation 34
5.4 Display and acknowledging error messages 37
5.5 HART communication 38

6 Commissioning 40

6.1 Function check 40
6.2 Switching on the measuring device 40
6.3 Basic Setup 41
6.4 Basic Setup with the VU331 43
6.5 Blocking distance 51
6.6 Envelope curve with VU331 53
6.7 Function "envelope curve display" (0E3) 54
6.8 Basic setup with the Endress+Hauser operating program 57

7 Maintenance 63

7.1 Exterior cleaning 63
7.2 Repair 63
7.3 Repairs to Ex-approved devices 63
7.4 Replacement 63

8 Accessories 64

8.1 Weather protection cover 64
8.2 Weld-in adapter 64
8.3 Remote display and operation FHX40 65
8.4 Commubox FXA195 HART 66
8.5 Commubox FXA291 66
8.6 ToF Adapter FXA291 66
8.7 Protective cover 66
8.8 Calibration kit 66

9 Troubleshooting 67

9.1 Troubleshooting instructions 67
9.2 System error messages 68
9.3 Application errors 70
9.4 Spare Parts 72
9.5 Return 73
9.6 Disposal 73
9.7 Software history 73
9.8 Contact addresses of Endress+Hauser 73

10 Technical data 74

10.1 Additional technical data 74

11 Appendix 82

11.1 HART operating menu (display module) 82
11.2 Patents 84

Index 85

1 Safety instructions

1.1 Designated use

The Levelflex M is a compact level transmitter for continuous measurement in liquids, using the guided level radar/TDR: **t**ime **d**omain **r**eflectometry measuring principle.

1.2 Installation, commissioning and operation

The Level M is designed to meet state-of-the-art safety requirements and conforms to applicable standards and EC regulations. If installed incorrectly or used for applications for which it is not intended, however, the device can present a source of application-related danger, e.g. product overflow due to incorrect installation or configuration. For this reason, installation, connection to the electricity supply, commissioning, operation and maintenance of the measuring system must only be carried out by trained, qualified specialists authorized to perform such work by the facility's owner-operator. The specialists must have read and understood these Operating Instructions and must follow the instructions they contain. Modifications and repairs to the device are permissible only when they are expressly approved in the Operating Instructions.

1.3 Operational safety and process safety

Alternative monitoring measures must be taken to ensure operational safety and process safety during configuration, testing and maintenance work on the device.

Hazardous area

Applicable national standards must be observed when using the measuring system in hazardous areas. The device is accompanied by separate “Ex documentation”, which is an integral part of this documentation. The installation regulations, connection values and safety instructions listed in this document must be observed.

- Ensure that all personnel are suitably qualified.
- Measuring point requirements with regard to measurement and safety must be observed.

1.4 Notes on safety conventions and icons

In order to highlight safety-relevant or alternative operating procedures in the manual, the following conventions have been used, each indicated by a corresponding symbol in the margin.

Safety instructions	
	**Warning!** Indicates an action or procedure which, if not performed correctly, can result in serious personal injury, a safety hazard or the destruction of the device.
	**Caution!** Indicates an action or procedure which, if not performed correctly, can result in personal injury or the incorrect operation of the device.
	**Note!** Indicates an action or procedure which, if not performed correctly, can have an indirect effect on operation or trigger an unexpected response on the part of the device.
Explosion protection	
	**Explosion protected, type-examined equipment** If the device has this symbol embossed on its nameplate, it can be used in a hazardous area or a non-hazardous area, according to the approval.
	**Explosion hazardous area** This symbol is used in the drawings of these Operating Instructions to indicate hazardous areas. devices in hazardous areas, or cables for such devices, must have appropriate explosion protection.
	**Safe area (non-hazardous area)** This symbol is used in the drawings of these Operating Instructions to indicate non-hazardous areas. devices in the non-hazardous area also have to be certified if connecting cables lead into the hazardous area.
Electrical symbols	
	**Direct current** A terminal to which DC voltage is applied or through which direct current flows.
	Alternating current A terminal to which alternating voltage (sine-wave) is applied or through which alternating current flows.
	**Ground connection** A grounded terminal which, as far as the operator is concerned, is grounded by means of a grounding system.
	**Protective ground connection** A terminal which must be connected to ground prior to making any other connection to the equipment.
	**Equipotential connection** A connection that has to be connected to the plant grounding system: This may be a potential equalization line or a star grounding system depending on national or company codes of practice.
	**Temperature resistance of the connecting cables** Indicates that the connecting cables have to withstand a temperature of 85 °C at least.

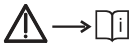	**Safety instruction** For safety instructions refer to the manual for the appropriate device version.

2 Identification

2.1 Device designation

2.1.1 Nameplate

The following technical data are given on the device nameplate:

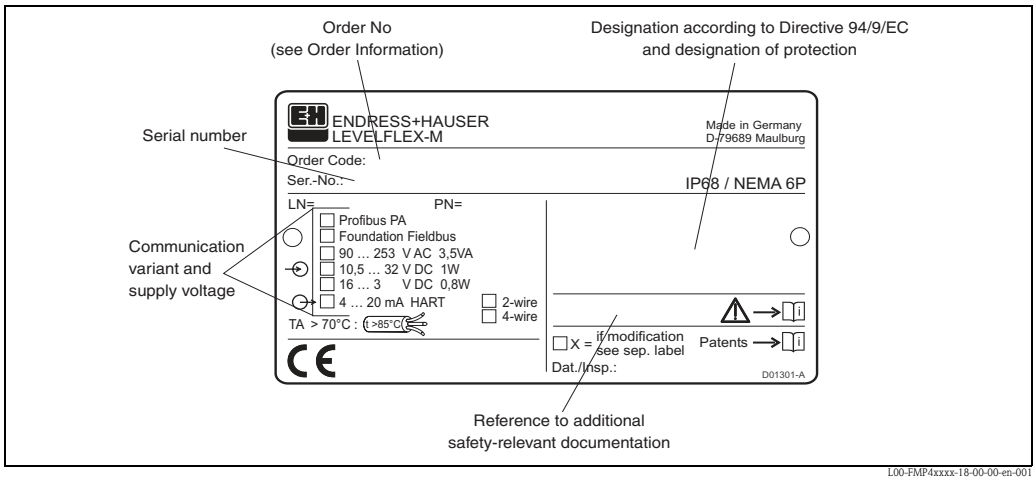

Information on the nameplate of the Levelflex M FMP43

2.1.2 Ordering structure

This overview does not mark options which are mutually exclusive.

10	**Approval:**			
	A	Non-hazardous area		
	1	ATEX II 1/2 G Ex ia IIC T6		
	7	ATEX II 1/2 G Ex d (ia) IIC T6		
	5	ATEX II 1/2 G Ex ia IIC T6, ATEX II 1/3 D		
	3	ATEX II 2G Ex emb (ia) IIC T6		
	2	ATEX II 1/2 D, Alu blind cover		
	4	ATEX II 1/3 D		
	M	FM DIP Cl. II Div. 1 Gr. E-G N.I.		
	S	FM IS Cl. I, II, III Div. 1 Gr. A-G N.I., zone 0, 1, 2		
	T	FM XP Cl. I, II, III Div. 1 Gr. A-G, zone 1, 2		
	N	CSA General Purpose		
	P	CSA DIP Cl. II Div. 1 Gr. G + coal dust, N. I.		
	U	CSA IS Cl. I, II, III Div. 1 Gr. A-D, G + coal dust, N.I., zone 0, 1, 2		
	V	CSA XP Cl .I, II, III Div. 1 Gr. A-D, G + coal dust, N.I., zone 1, 2		
	K	TIIS Ex ia IIC T4 (in preparation)		
	I	NEPSI Ex ia IIC T6 (in preparation)		
	Y	Special version, TSP-No. to be spec.		
20		**Probe:**		
		300 mm - 4000 mm/12 in - 157 in		
		K	..... mm, rod 8 mm, 316L, Ra < 0.76 µm/30 µin	
		M	..... in, rod 8 mm 316L, Ra < 0.76 µm/30 µin	
		S	..... mm, rod 8 mm, 316L, electropolished Ra < 0.38 µm/15 µin	
		T	..... in, rod 8 mm 316L, electropolished Ra < 0.38 µm/15 µin	
		Y	Special version, TSP-No. to be spec.	
30			**O-ring Material; Temperature:**	
			5	EPDM, FDA, USP Cl. VI; - 20 °C to 130 °C
			6	Kalrez, FDA, USP Cl. VI; - 20 °C to 150 °C
			9	Special version, TSP-No. to be spec.

40	**Process Connection:**
	— Threaded boss —
U1J	Thread M24, 316L, install > accessory weld-in adapter
	— Clamp connections —
TCJ	Tri-clamp ISO2852 DN25-38 (1 to 1-1/2"), 316L, 3A, EHEDG
TDJ	Tri-clamp ISO2852 DN40-51 (2"), 316L, 3A, EHEDG
TFJ	Tri-clamp ISO2852 DN70-76.1 (3"), 316L, 3A, EHEDG
	— Hygienic connections —
T7J	SMS 1-1/2" PN25, 316L, EHEDG
TXJ	SMS 2" PN25, 316L, EHEDG
MAJ	DIN11864-1 A DN25 tube DIN11850, 316L, slotted-nut, EHEDG
MQJ	DIN11851 DN40 PN40, slotted-nut, 316L, EHEDG
MRJ	DIN11851 DN50 PN40, slotted-nut, 316L, EHEDG
S1J	NEUMO BioControl DN25 PN16, 316L, EHEDG
	— ANSI flanges —
AEJ	1-1/2" 150 lbs RF, 316L flange ANSI B16.5
AFJ	2" 150 lbs RF, 316L flange ANSI B16.5
YY9	Special version, TSP-No. to be spec.

50	**Power Supply; Output:**
B	2-wire ; 4-20mA SIL HART
D	2-wire; PROFIBUS PA
F	2-wire; FOUNDATION Fieldbus
G	4-wire 90-250 VAC; 4-20mA SIL HART
H	4-wire 10.5-32 VDC; 4-20mA SIL HART
Y	Special version, TSP-No. to be spec.

60	**Operation:**
1	W/o display, via communication
2	4-line display VU331
3	Prepared for FHX40
9	Special version, TSP-No. to be spec.

70	**Type of Probe:**
1	Compact, basic version
5	Compact, detachable
6	Remote, cable 3 m, detachable
7	Remote, cable 6 m, detachable
9	Special version, TSP-No. to be spec.

80	**Housing:**
A	F12 Alu, coated IP68 NEMA6P
B	F23, 316L, IP68, NEMA6P
C	T12 Alu, coated IP68 NEMA6P, separate conn. compartment
D	T12 Alu, coated IP68 NEMA6P + OVP[1)], seperate terminal compartment
Y	Special version, TSP-No. to be spec.

90	**Cable Entry:**
2	Gland M20 (EEx d > thread M20)
3	Thread G 1/2
4	Thread NPT 1/2
5	Plug M12
6	Plug 7/8"
9	Special version, TSP-No. to be spec.

100	**Additional Option:**
A	Basic version
B	EN10204-3.1 material (316L wetted parts) inspection certificate
H	5-point linearity protocol, see additional spec.
J	5-point, 3.1, 5-point linearity protocol, see additional spec., EN10204-3.1 material (316L wetted parts), inspection certificate
P	CoC-ASME BPE, EN10204-3.1 material (316L wetted parts) inspection certificate
R	5-point, CoC-ASME BPE, 3.1, 5-point linearity protocol, see additional spec., EN10204-3.1 material (316L wetted parts), inspection certificate
Y	Special version, TSP-No. to be spec.

995	**Marking:**
1	Tagging (TAG), see additional spec.
2	Bus address, see additional spec.

FMP43-	Complete product designation

[1)] OVP = overvoltage protection

2.2 Scope of delivery

Caution!
It is essential to follow the instructions concerning the unpacking, transport and storage of measuring devices given in the chapter "Incoming acceptance, transport, storage", → 9!

The scope of delivery consists of:
- Assembled device
- Accessories (→ 64)
- Endress+Hauser operating program on the enclosed CD-ROM
- Brief operating instructions KA00189F/00/A2 (basic setup/troubleshooting), housed in the device
- Brief operating instructions KA01047F/00/EN for quick commissioning
- Approval documentation: if this is not included in the operating manual
- CD-ROM with further documentation, e.g.
  - Technical Information
  - Operating Instructions
  - Description of Instrument Functions

2.3 Certificates and approvals

CE mark, declaration of conformity
The device is designed to meet state-of-the-art safety requirements, has been tested and left the factory in a condition in which it is safe to operate. The device takes into account applicable standards and regulations which are listed in the EC declaration of conformity and thus meets the legal requirements of the EC Directives. Endress+Hauser confirms the successful testing of the device by affixing to it the CE mark.

2.4 Registered trademarks

KALREZ®, VITON®, TEFLON®
Registered trademarks of E.I. Du Pont de Nemours & Co., Wilmington, USA

TRI-CLAMP®
Registered trademark of Ladish & Co., Inc., Kenosha, USA

HART®
Registered trademark of the HART Communication Foundation, Austin, USA

PulseMaster®
Registered trademark of Endress+Hauser GmbH+Co. KG, Maulburg, Germany

3 Installation

3.1 Incoming acceptance, transport, storage

3.1.1 Incoming acceptance

Check the packing and contents for any signs of damage.
Check the shipment, make sure nothing is missing and that the scope of supply matches your order.

3.1.2 Transport



Caution!
Follow the safety instructions and transport conditions for devices of more than 18 kg. Do not lift the measuring device by the probe rod in order to transport it.

3.1.3 Storage

Pack the measuring device in such a way as to protect it reliably against impact for storage and transportation. The original packing material provides the optimum protection for this.
The permissible storage temperature is -20 °C to +80 °C.

3.2 Installation conditions

3.2.1 Dimensions

Housing dimensions

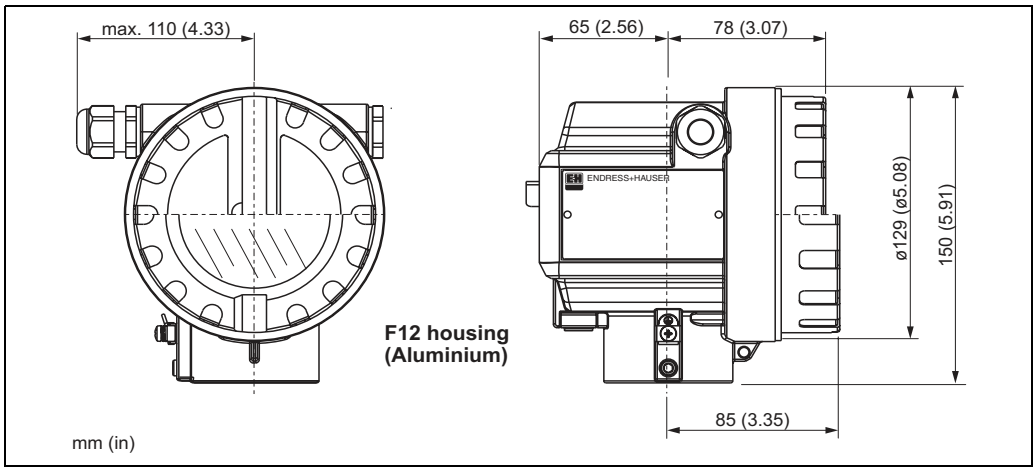

L00-F12xxxx-06-00-00-en-001

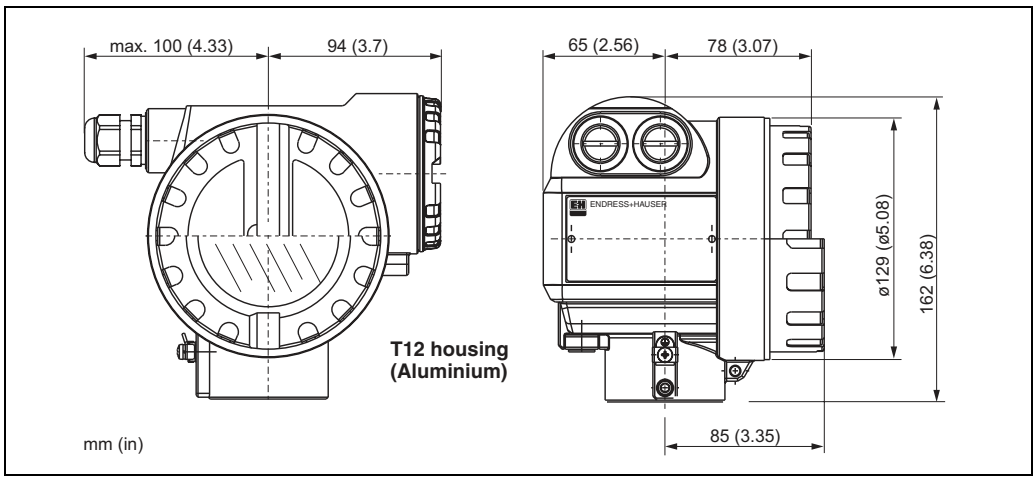

L00-T12xxxx-06-00-00-en-001

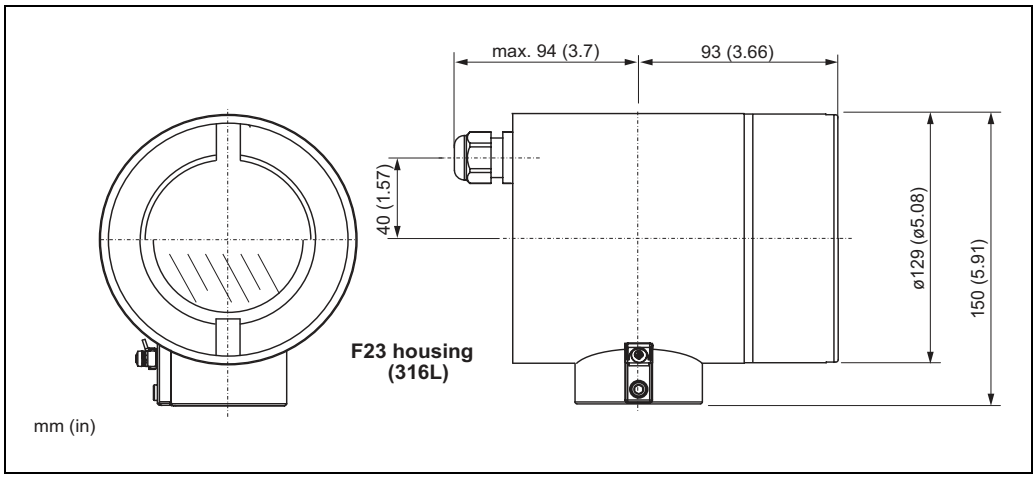

L00-F23xxxx-06-00-00-en-001

Probes - Dimensions and materials

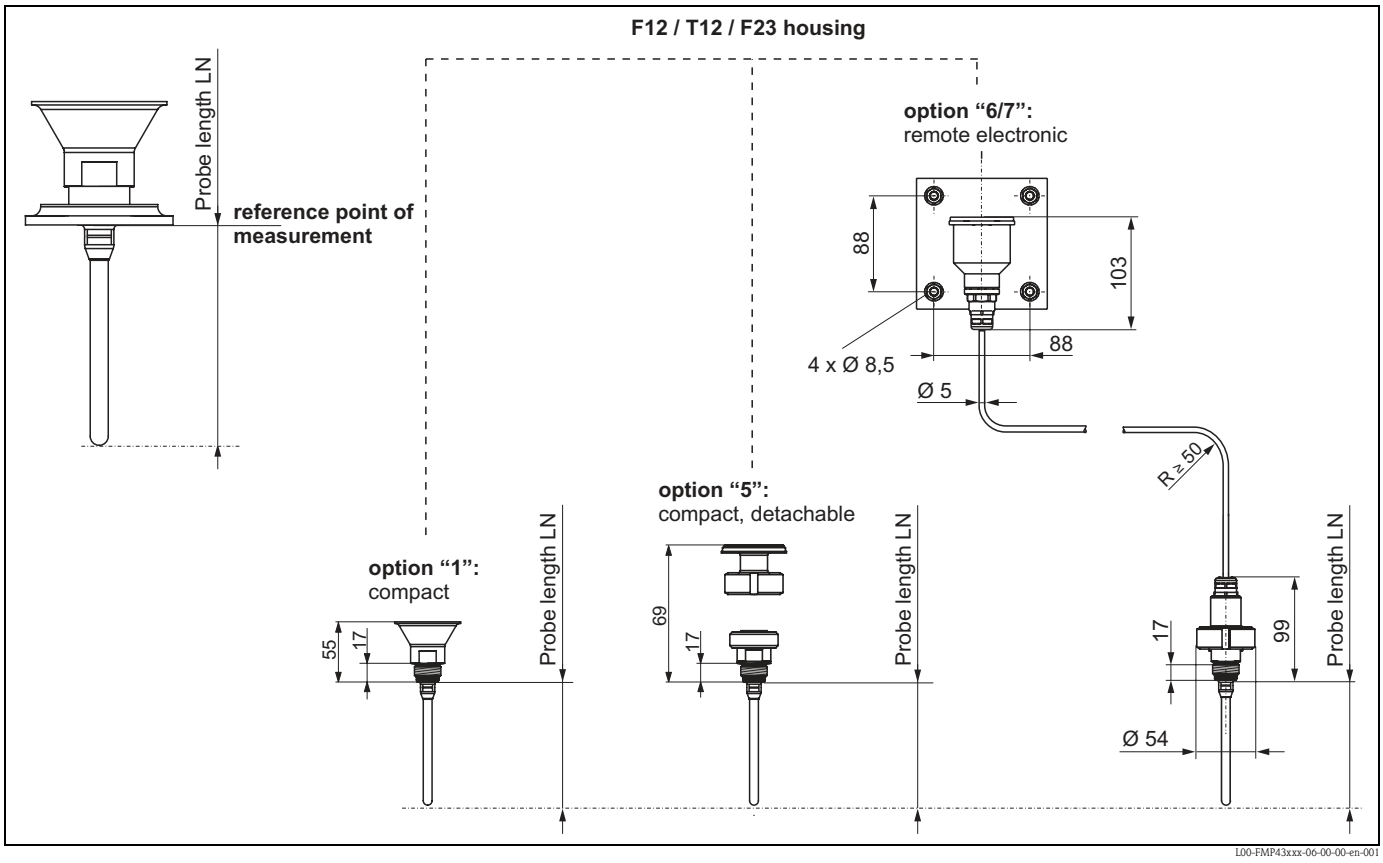

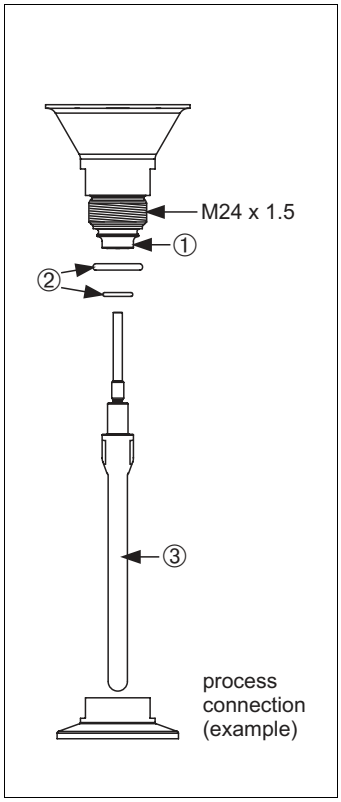

① **Insulator**

Material	Approval
Ketron PEEK LSG	FDA, 3A, USP Cl. VI

② **O-ring (see Feature 30 in "Ordering information"**

Material	Approval	Temperature range	Option
EPDM Freudenberg 70 EPDM 291	FDA, 3A, USP Cl. VI	- 20 °C to +130 °C (functional) - 20 °C to +121 °C (3A Class. II, USP Cl. VI)	5
FFKM DuPont Kalrez 6221		- 20 °C to +150 °C (functional) - 20 °C to +149 °C (3A Class. I, USP Cl. VI)	6

③ **Probe (see Feature 20 in "Ordering information)**

Material	Version	Option
316L (1.4435)	0.76 µm mechanically polished	K, M
	0.38 µm electropolished	S, T
Hastelloy C22	Special version available on request	Y

Process connections - Dimensions and materials

Endress+Hauser supplies DIN/EN flanges made of stainless steel according to AISI 316L (DIN/EN material number 1.4404 or 1.4435). With regard to their temperature stability properties, the materials 1.4404 and 1.4435 are grouped under 13E0 in EN 1092-1 Tab.18. The chemical composition of the two materials can be identical.

Process connection	Designation	Versions	Approvals	Option
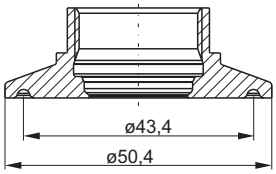	Tri-clamp ISO2852 DN25-38 (1 to 1-½")* P_{max} = 16 bar Material: 316L (1.4435)	■ 0.76 µm ■ 0.38 µm electropolished	■ 3A ■ EHEDG ■ ASME-BPE compliant	TCJ
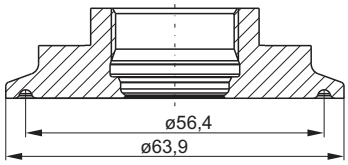	Tri-clamp ISO2852 DN40-51 (2")* P_{max} = 16 bar Material: 316L (1.4435)			TDJ
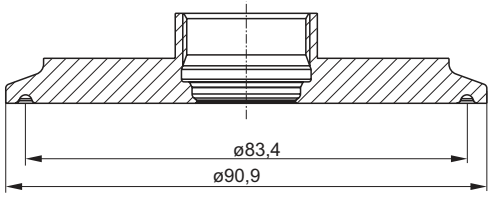	Tri-clamp ISO2852 DN70-76.1 (3") P_{max} = 10 bar Material: 316L (1.4435)			TFJ
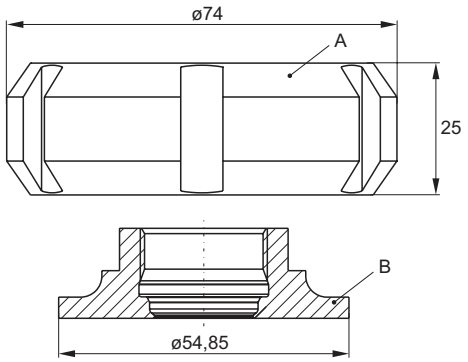	SMS 1-½" PN25 with slotted nut* P_{max} = 16 bar Material: A= 1.4307 B= 316L (1.4435)	■ 0.76 µm	■ EHEDG	T7J
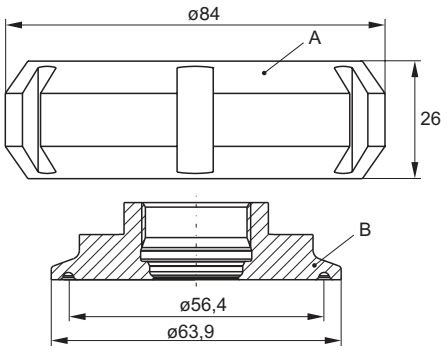	SMS 2" PN25 with slotted nut* P_{max} = 16 bar Material: A= 1.4307 B= 316L (1.4435)			TXJ

Process connection	Designation	Versions	Approvals	Option
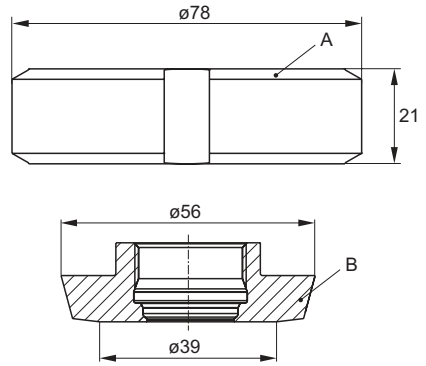	DIN11851 DN40 PN40 with slotted nut F40* P_{max} = 16 bar Material: A= 1.4307 B= 316L (1.4435)	■ 0.76 µm	■ EHEDG	MQJ
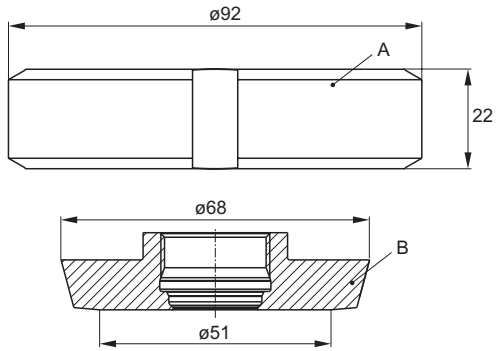	DIN11851 DN50 PN40 with slotted nut F50* P_{max} = 16 bar Material: A= 1.4307 B= 316L (1.4435)			MRJ
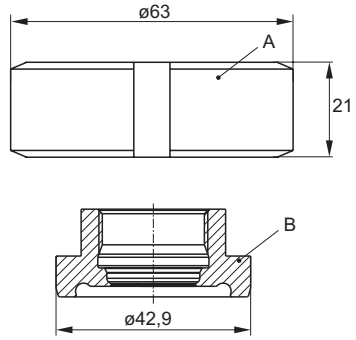	DIN11864-1 A DN25 Pipe DIN11850 with slotted nut F25* P_{max} = 16 bar Material: A= 1.4307 B= 316L (1.4435)	■ 0.76 µm ■ 0.38 µm electropolished		MAJ
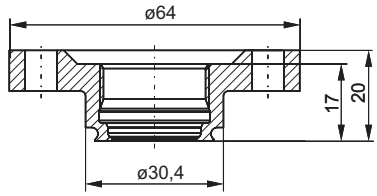	NEUMO BioControl DN25 PN16* P_{max} = 16 bar Material: 316L (1.4435)			S1J
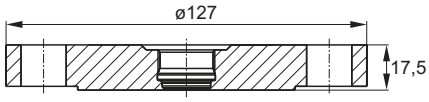	1-1/2" 150lbs RF Flange ANSI B16.5* P_{max} = 16 bar Material: 316L	■ 0.76 µm		AEJ
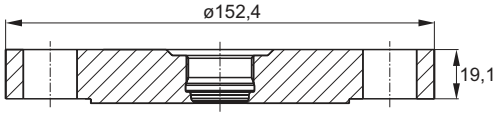	2" 150lbs RF Flange ANSI B16.5* P_{max} = 16 bar Material: 316L			AFJ

Process connection	Designation	Versions	Approvals	Option
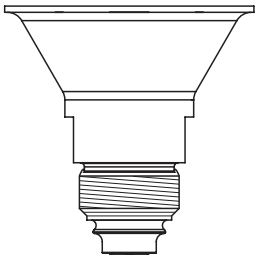	Thread M24 x 1.5			U1J
	You need the following weld-in adapter:			
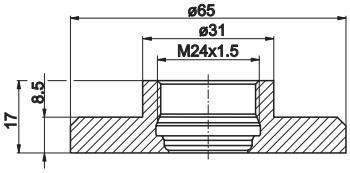	Weld-in adapter order number: 71041381 P_{max} = 16 bar Material: 316L (1.4435)	Accessory: weld-in adapter ■ 0.76 µm		

3.3 Installation instructions

3.3.1 Mounting tools

A 4 mm Allen key is needed to turn the housing.

3.3.2 General instructions

Normally use rod probes. Rope probes are used for measuring ranges > 4 m and with restricted ceiling clearance which does not allow the installation of rigid probes.

Mounting location

- Do not mount the probe in the filling curtain (2).
- Mount the probe at such a distance away from the wall (B) that, in the event of buildup on the wall, there is still a minimum distance of 100 mm between the probe and the build-up.
- Mount the probe as far away as possible from internals.
- The minimum distance from the probe end to the tank floor is 10 mm.
- If installing outdoors, it is recommended that you use a weather protection cover (1). ("Accessories", → 64).

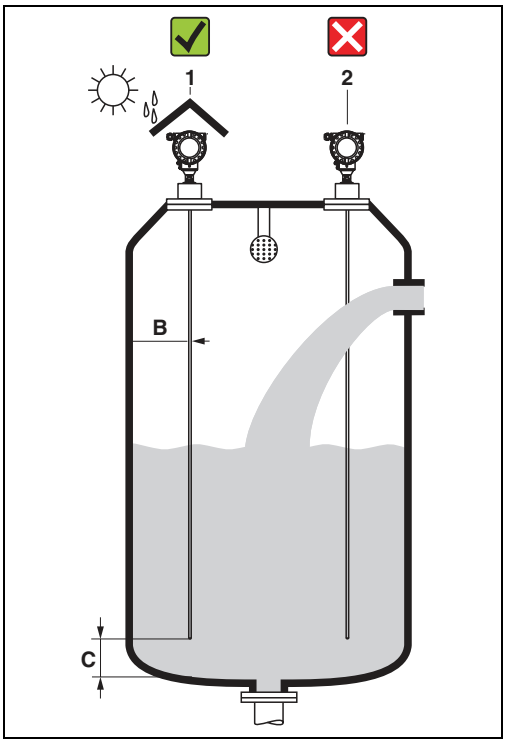

L00-FMP43xxx-17-00-00-xx-001

Tank internals

- If the distance to the internals is < 300 mm, "mapping" must be carried out, and the measurement capability may be restricted.
- During operation, the probe must not touch any internals within the measuring range.

Optimization options

Interference echo suppression: measurement can be optimized by electronically suppressing interference echoes.

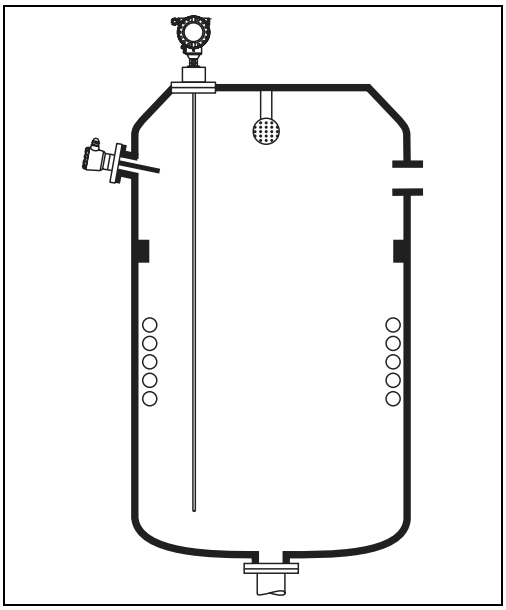
L00-FMP43xxx-17-00-00-xx-002

Note!
You must ensure that the probe does not come into contact with the container wall, container bottom and tank internals.

3.3.3 Special instructions

When installing in tanks with agitator, observe the lateral loading capacity of rod probes:
- 10 Nm with 316L (1.4435)
- 16 Nm with Hasteloy C22 (on request).

The formula for calculating the bending torque M impacting on the probe:

$$M = c_W \cdot \frac{\rho}{2} \cdot v^2 \cdot d \cdot L \cdot (L_N - 0.5 \cdot L)$$

with
c_w : Friction factor
ρ [kg/m^3]: Density of the medium
v [m/s]: Velocity of the medium perpendicular to the probe rod
d [m]: Diameter of the probe rod (8 mm)
L [m]: Level
L_N [m]: Probe length

Calculation example

Friction factor [c_w]	0.9 (on the assumption of a turbulent current (high Reynolds number))
Density [ρ] in kg/m^3	1000 (e.g. water)
Probe diameter [d] in m	0.008
L = L_N (worst case)	

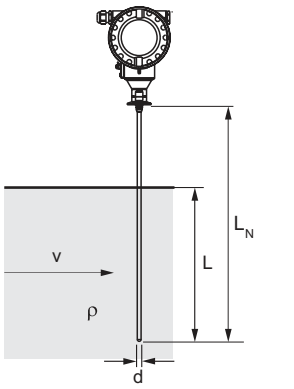

L00-FMP43xxx-16-00-00-xx-003

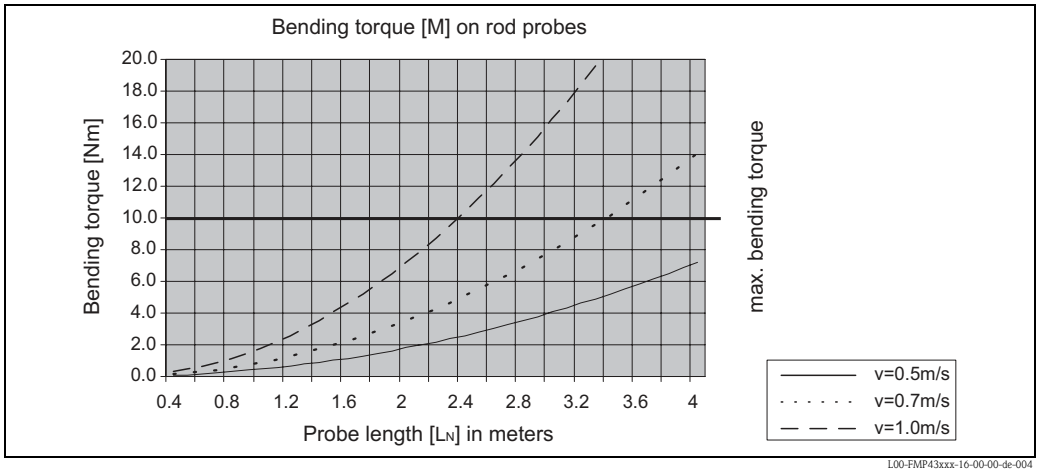

L00-FMP43xxx-16-00-00-de-004

The probe must be mounted opposite the agitator.
If possible, check whether a non-contact process, ultrasonic or level-radar would be better suited, particularly if the agitator generates large mechanical loads on the probe.

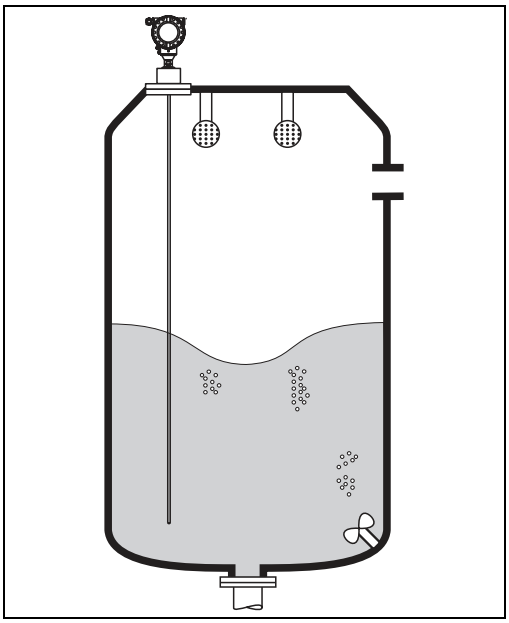
L00-FMP43xxx-17-00-00-xx-005

3.3.4 Notes on special installation situations

Installation at an angle

- For mechanical reasons, the probe should be installed as vertically as possible.
- With inclined installations the probe length has to be adjusted in dependence to the installation angle.
  – up to 1 m = 30°
  – up to 2 m = 10°
  – up to 4 m = 5°.

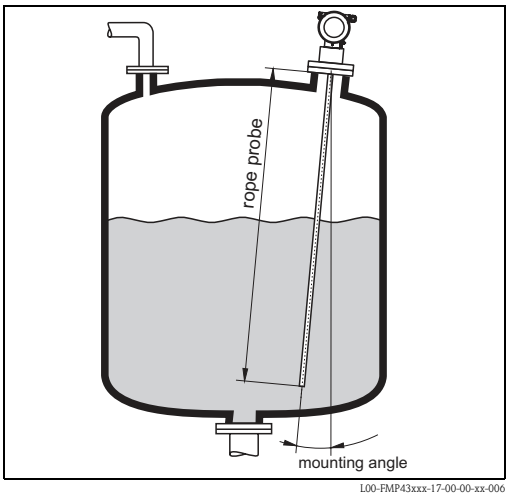

L00-FMP43xxx-17-00-00-xx-006

Installation in plastic containers

Please note that the "guided level radar" measuring principle requires a metallic surface at the process connection! When installing rod or robe probes in plastic silos, whose silo cover is also made of plastic or silos with wood cover, the probes must either be mounted in a ≥ DN50 (2") metallic flange, or a metal sheet with diameter of ≥ 200 mm must be mounted under screw-in piece.

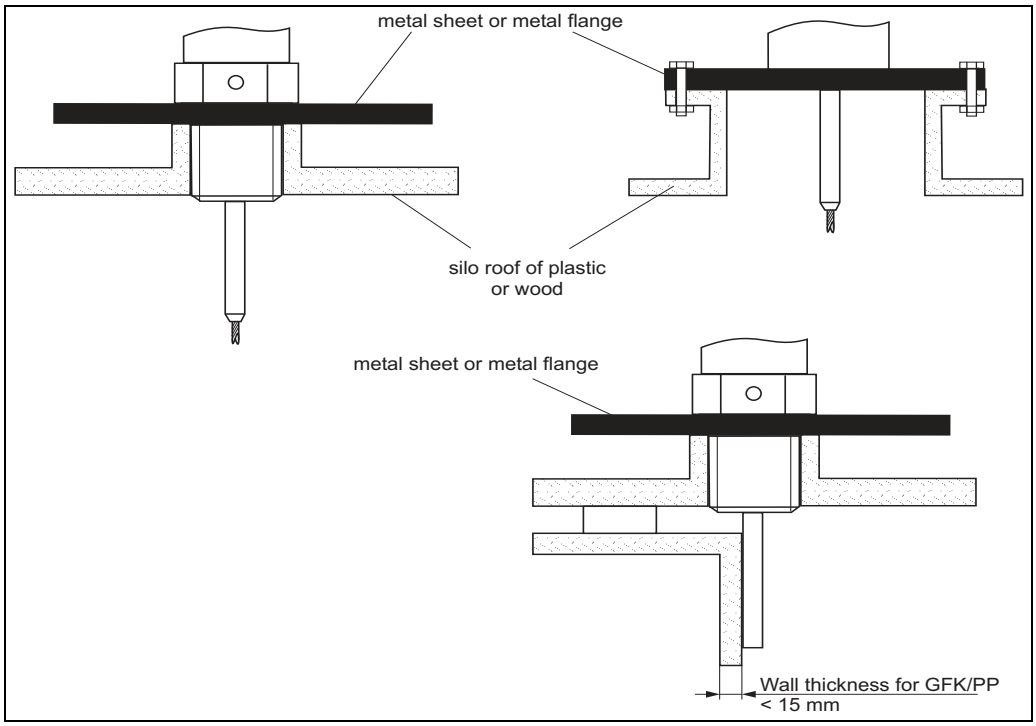

3.3.5 Installation with difficult-to-access process connections

Installation with remote electronics

- Wall and pipe bracket is contained in the scope of delivery and is already mounted.
- Mount the housing on the wall or pipe (vertically or horizontally, as required) as shown in the diagram.
- The wall retainer can also be used for mounting in display panels.
  Please observe the dimensions on → 10 for the cutout.

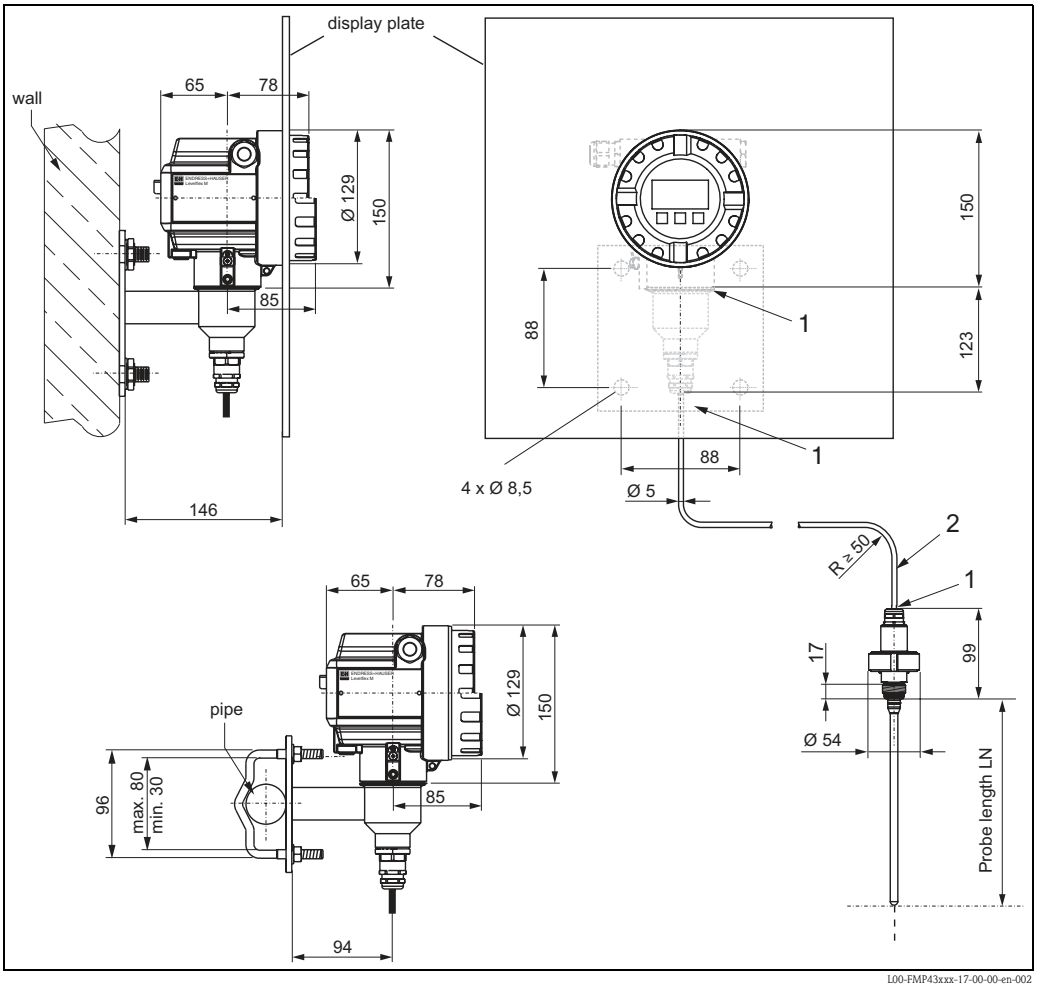

L00-FMP43xxx-17-00-00-en-002

Note!
The cable cannot be disassembled at these points (1).
The cable should never be bent or buckled.

The ambient temperature for the connecting line (2) between the probe and electronics can be max. 105 °C. The version with remote electronics consists of the probe, a connecting cable and the housing. If they are ordered as a set, they are assembled on delivery.

3.3.6 Turning the housing

After mounting, the housing can be turned 350° in order to ease access to the display and the terminal compartment. Proceed as follows to turn the housing to the required position:
- Undo the fixing screw (1)
- Turn the housing (2) in the required direction
- Tighten the fixing screw (1)

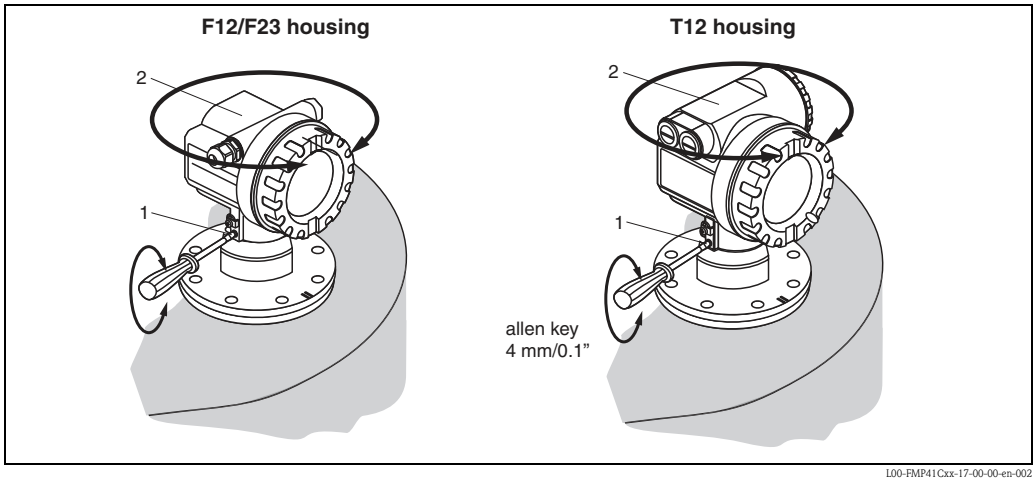

L00-FMP41Cxx-17-00-00-en-002

3.4 Post-installation check

After the measuring device has been installed, perform the following checks:
- Is the device damaged (visual inspection)?
- Does the device correspond to specifications at the measuring point, including process temperature and pressure, ambient temperature, measuring range, etc.?
- Are the measuring point number and labeling correct (visual inspection)?
- Is the device adequately protected against rain and direct sunlight (→ 64)?

3.5 Cleaning of the probe

3.5.1 Cleaning of the probe in the tank

Installation close to tank wall
By installing the probe close to the tank wall, the cleaning effect is improved in cases where a spray ball is used. The cleaning jet is deflected against the tank wall and onto the probe. This means that those parts of the probe are cleaned which would normally not be reached by the spray ball jet. If the probe is positioned in this way, only one spray ball is needed.

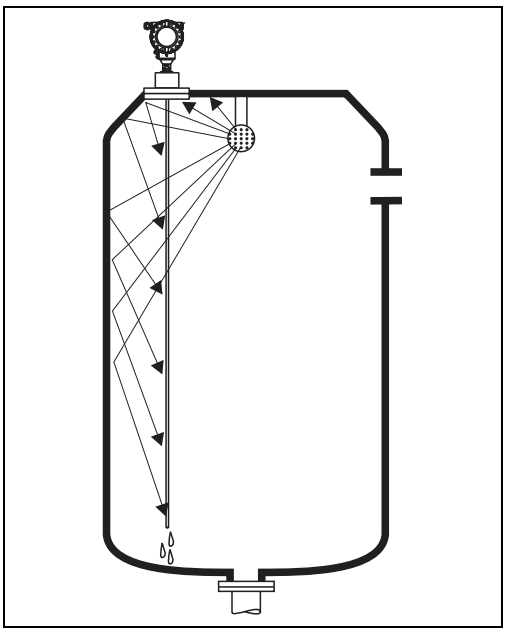

L00-FMP43xxx-17-00-00-xx-003

Installation in the center of the tank
If the probe is mounted in the center of the tank, it may be necessary to use a second spray ball. The spray balls should then be mounted to the left and right of the probe.

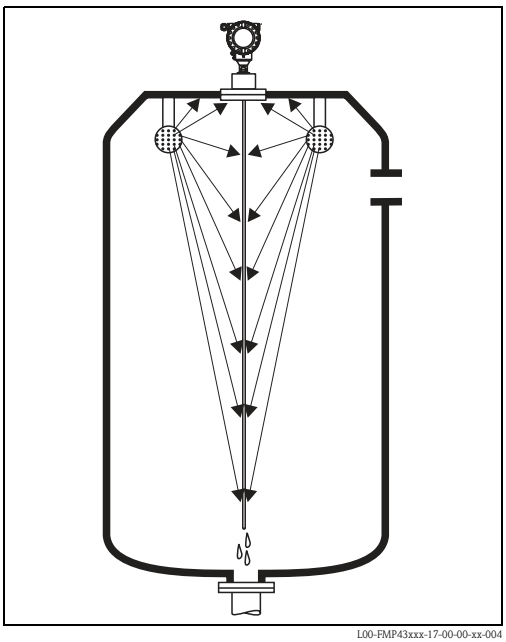

L00-FMP43xxx-17-00-00-xx-004

3.5.2 Cleaning of the probe outside of the tank

The probe can be disassembled so it can be cleaned better.

The disassembly requires the following tools:

- Note!
  vise with fiber braces (surface protection for the polished probe rod)
- hook wrench for sanitary process connections (diary or SMS)
- open-ended wrench AF27 / AF32 with a torque adjustement up to 20 Nm

Before disassembly, it has to be make sure that the supply voltage for the device is switched off!

- Note!
  Disassembling the housing for calibration purposes:
  When releasing the slotted nut ① make sure to counterhold at the process connection ring ⑤ with an open-ended wrench as the adapter ③ could otherwise be released from the flange. In hazardous or contaminated areas, seal the adapter with a protective cover ⑦ ("Accessories", → 📄 64) (20 Nm) and integrate into the local potential equalization where necessary.
- unscrew the grooved nut ① with hook wrench.
- remove the unscrewed housing ② together with the housing adapter from the adapter ③ of the process connection. The housing adapter is still connected with the housing. At the remote version: remove only the cable adapter.
- Replace O-ring ⑧ where necessary. Order number, → 📄 72

Disassembly of rod probe:

- unscrew adapter ③ from the process connection (as example: flange): unscrew adapter at the wrench flats with hook wrench (AF27) and pull it out of the tank together with the rod probe (length max. 4 m).
- Probe rod ④
  – without wrench flats (until 2009): clamp the probe rod in a vise.
  – with wrench flats (from 2009 onwards): clamp the probe rod at the wrench flats or use a fitting pliers.
  Caution: Protect the surface of the polished probe rod! Do not damage the surface by scratching or denting it.
- unscrew adapter ③ from the probe rod (approx. 12 rotations counter-clockwise and remove (plug connection). The probe rod is screwed in the insulating bush with 4.5 Nm.
- The O-rings ⑥ of the probe rod and adapter are now free accessible respectively changeable. The probe rod can be cleaned (autoclaved).
  O-ring order numbers, → 📄 72.

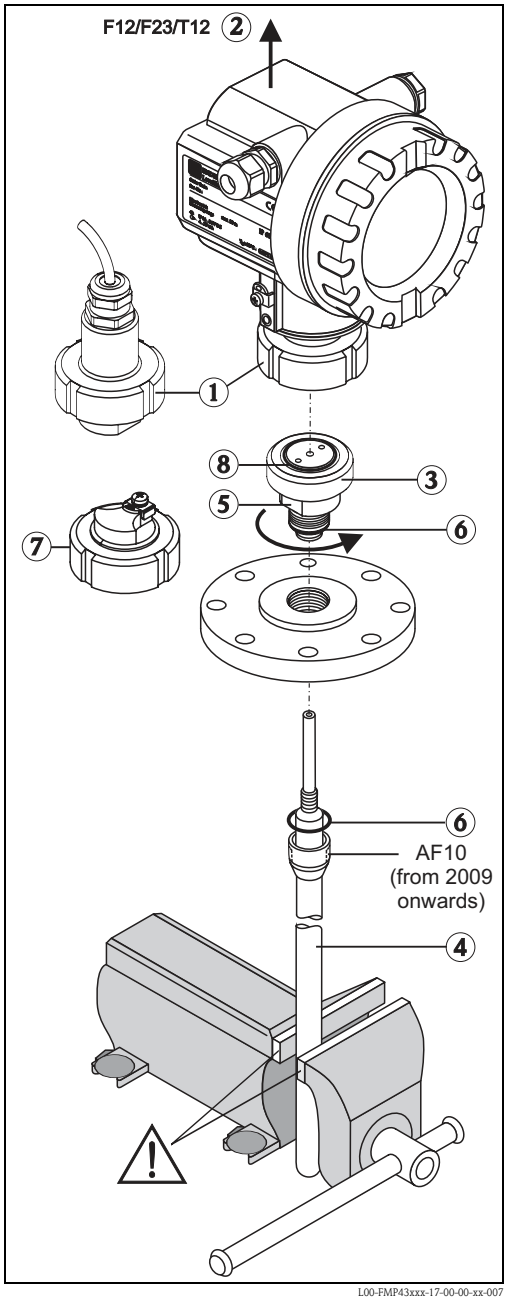

Assembly of the probe

The assembly is done in reversed order:
- screw adapter ③ with 4.5 Nm on the probe rod ④
- screw the adapter into the container process connection together with the probe rod and tighten with 20 Nm
- stick housing ② with housing adapter on the adapter and bolt it with the grooved nut ① – torque 20 Nm.

4 Wiring

4.1 Quick wiring guide

Wiring in F12/F23 housing

Caution!

Before connection please note the following:

- The power supply must be identical to the data on the nameplate (1).
- Switch off power supply before connecting up the device.
- Connect Equipotential bonding to transmitter ground terminal (7) before connecting up the device.
- Tighten the locking screw (8): It forms the connection between the probe and the housing ground potential.

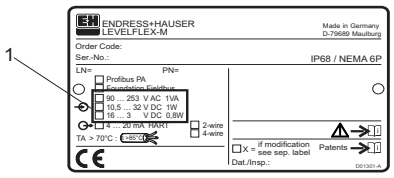

When you use the measuring system in hazardous areas, make sure you comply with national standards and the specifications in the safety instructions (XA's). Make sure you use the specific cable gland.

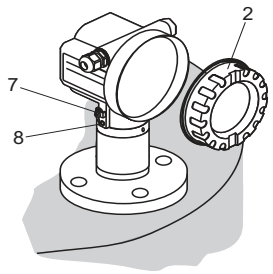

EX

On devices supplied with a certificate, the explosion protection is designed as follows:

- Housing F12/F23 - Ex ia: Power supply must be intrinsically safe (not for dust-Ex).
- The electronics and the current output are galvanically separated from the probe circuit.

Connect up the Levelflex M as follows:

Unplug display connector!

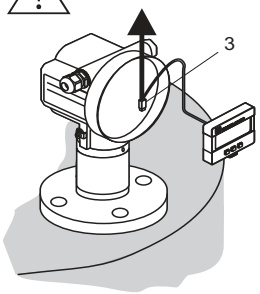

- Unscrew housing cover (2).
- Remove any display (3) if fitted.
- Remove cover plate from terminal compartment (4).
- Pull out terminal module slightly using "pulling loop" (only 2-wire).
- Insert cable (5) through gland (6). A standard installation cable is sufficient if only the analogue signal is used. Use a screened cable when working with a superimposed communications signal (HART).

EX

Only ground screening of the line (7) on sensor side.

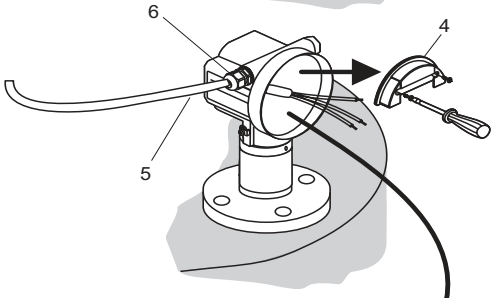

- Make connection (see pin assignment).
- Re-insert terminal module.
- Tighten cable gland (6). Max. torque 10...12 Nm!
- Tighten screws on cover plate (4).
- Insert display if fitted.
- Screw on housing cover (2). (on dust-Ex torque » 40 Nm).
- Switch on power supply.

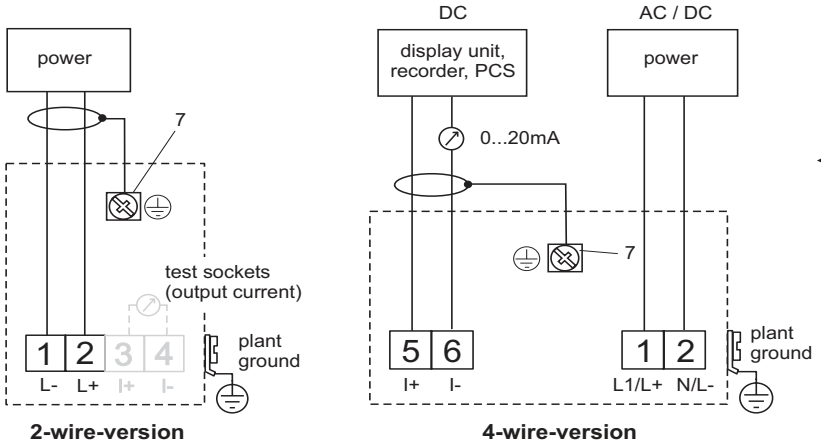

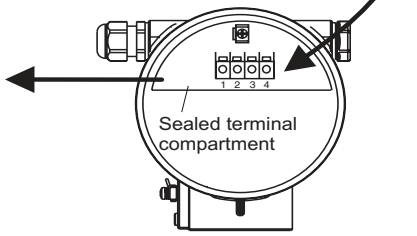

Note!

If 4-wire for dust-Ex-applications is used, the current output is **intrinsically save**.

L00-FMP41Cxx-04-00-00-en-001

Wiring in T12 housing

Caution!

Before connection please note the following:

- The power supply must be identical to the data on the nameplate (1).
- Switch off power supply before connecting up the device.
- Connect Equipotential bonding to transmitter ground terminal (7) before connecting up the device.
- Tigthen the locking screw (8):
  It forms the connection between the probe and the housing ground potential.

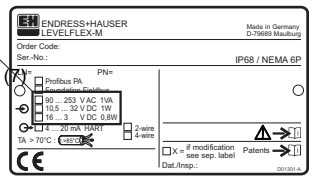

When you use the measuring system in hazardous areas, make sure you comply with national standards and the specifications in the safety instructions (XA's).
Make sure you use the specific cable gland.

Connect up the Levelflex M as follows:

EX

Before unscrew housing cover (2) at separate connection room turn off the power supply!

- Insert cable (3) through gland (4).
  A standard installation cable is sufficient if only the analogue signal is used. Use a screened cable when working with a superimposed communications signal (HART).

EX

Only ground screening of the line (5) on sensor side.

- Make connection (see pin assignment).
- Tighten cable gland (4).
  Max, torque 10 to 12 Nm!
- Screw on housing cover (2).
  (on dust-Ex torquet » 40 Nm)
- Switch on power supply.

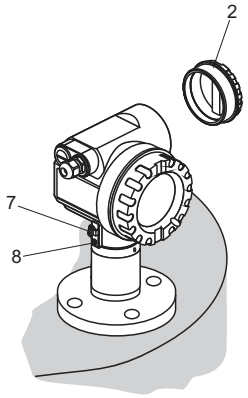

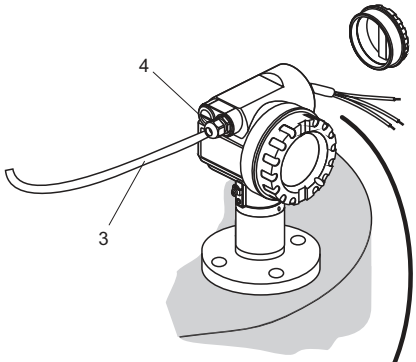

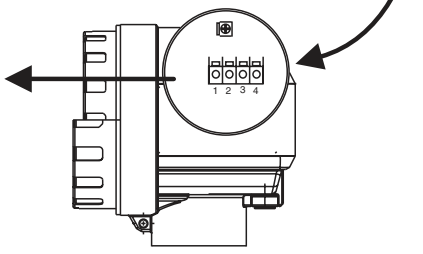

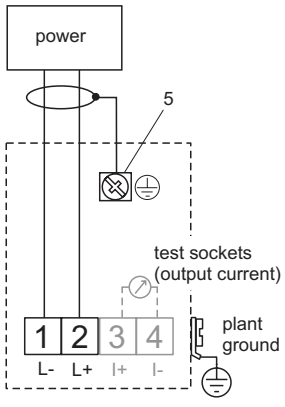

2-wire-version

L00-FMP41Cxx-04-00-00-en-002

4.2 Connecting the measuring unit

4.2.1 Terminal compartment

Three housings are available:
- Aluminum housing F12 with additionally sealed terminal compartment for:
  - standard
  - Ex ia
- Aluminum housing T12 with separate terminal compartment for:
  - standard
  - Ex e
  - Ex d
  - Ex ia (with overvoltage protection)
- Stainless steel 316L (1.4435) housing F23 for:
  - standard
  - Ex ia

After mounting, the housing can be turned 350° in order to ease access to the display and the terminal compartment.

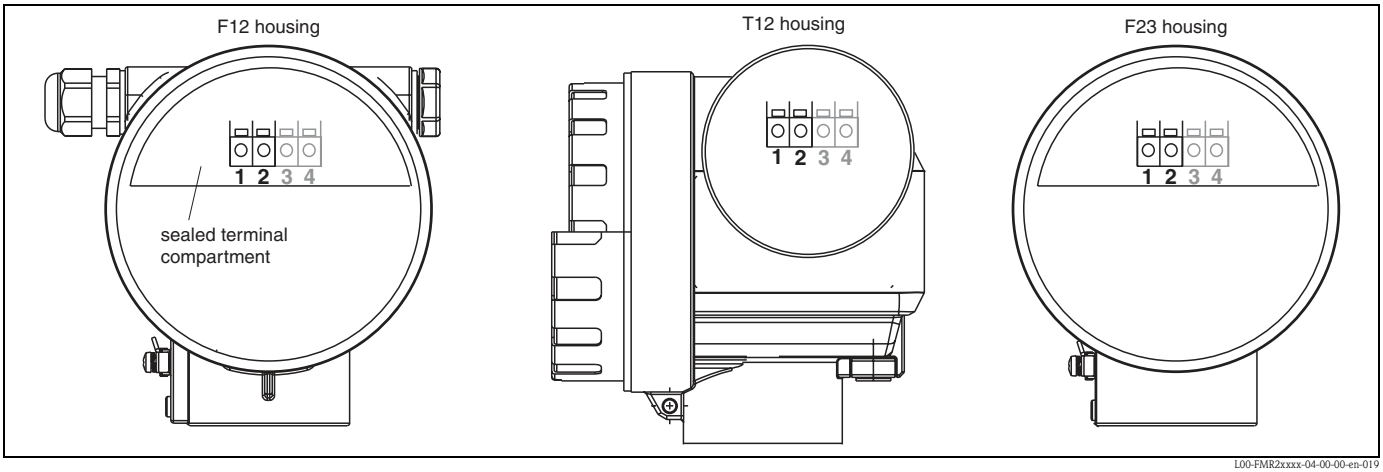

The device data are given on the nameplate together with important information regarding the analog output and power supply.
Housing orientation regarding the wiring see "Turning the housing", → 📄 20.

4.2.2 HART load

Min. load for HART communication: 250 Ω

4.2.3 Ground connection

It is necessary to make a good ground connection to the ground terminal on the outside of the housing in order to achieve EMC stability.

4.2.4 Cable gland

Type		Clamping area
Standard, Ex ia, IS	Plastic M20x1.5	5 to 10 mm
Ex em, Ex nA	Metal M20x1.5	7 to 10.5 mm

4.2.5 Terminals

For wire cross-sections of 0.5 to 2.5 mm^2

4.2.6 Cable entry

- Cable gland: M20x1.5 (only cable entry for Ex d)
- Cable entry: G½ or ½NPT

4.2.7 Supply voltage

HART, 2-wire

All the following voltages are terminal voltages directly at the device:

Communication		Current consumption	Terminal voltage
HART	standard	4 mA	16 V to 36 V
		20 mA	7.5 V to 36 V
	Ex ia	4 mA	16 V to 30 V
		20 mA	7.5 V to 30 V
	Ex em Ex d	4 mA	16 V to 30 V
		20 mA	11 V to 30 V
Fixed current, adjustable e.g. for solar power operation (measured value transferred at HART)	standard	11 mA	10 V to 36 V
	Ex ia	11 mA	10 V to 30 V
Fixed current for HART Multidrop mode	standard	4 mA[1)]	16 V to 36 V
	Ex ia	4 mA[1)]	16 V to 30 V

1) Start up current 11 mA.

HART residual ripple, 2-wire: $U_{ss} \leq 200$ mV

HART, 4-wire active

Version	Voltage	Max. load
DC	10.5 to 32 V	600 Ω
AC, 50/60 Hz	90 to 253 V	600 Ω

HART residual ripple, 4-wire, DC version: $U_{ss} = 2$ V, voltage incl. ripple within the permitted voltage (10.5 to 32 V).

4.2.8 Current consumption

Communication	Output current	Current consumption	Power consumption
HART, 2-wire	3.6 to 22 mA[1)]	—	min. 60 mW, max. 900 mW
HART, 4-wire (90 to 250 V_{AC})	2.4 to 22 mA	~ 3 to 6 mA	~ 3,5 VA
HART, 4-wire (10.5 to 32 V_{DC})	2.4 to 22 mA	~ 100 mA	~ 1 W

1) For HART-Multidrop: start up current is 11 mA.

4.2.9 Overvoltage protection

If the measuring device is used for level measurement in flammable liquids which requires the use of overvoltage protection according to EN/IEC 60079-14 or EN/IEC 60060-1 (10 kA, pulse 8/20 µs) it has to be ensured that

- the measuring device is used with integrated overvoltage protection with 600 V gas tube surge arrester in the T12 housing, see "Ordering structure", → 🖹 6
  or
- this protection is achieved through other appropriate measures (external protection devices e.g. HAW562Z).

4.2.10 Connecting HART with Endress+Hauser RMA422 / RN221N

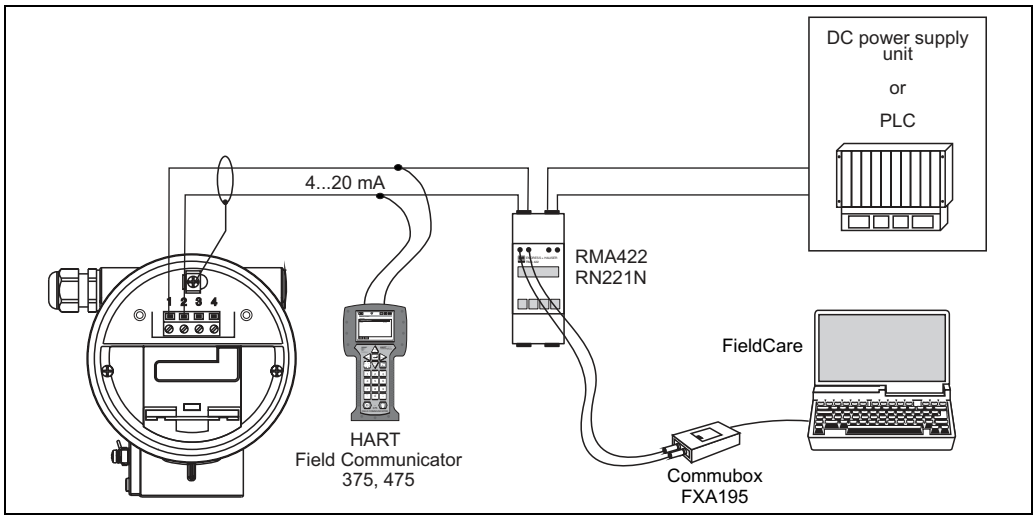

L00-FMP40xIx-04-00-00-en-005

4.2.11 Connecting HART with other supply units

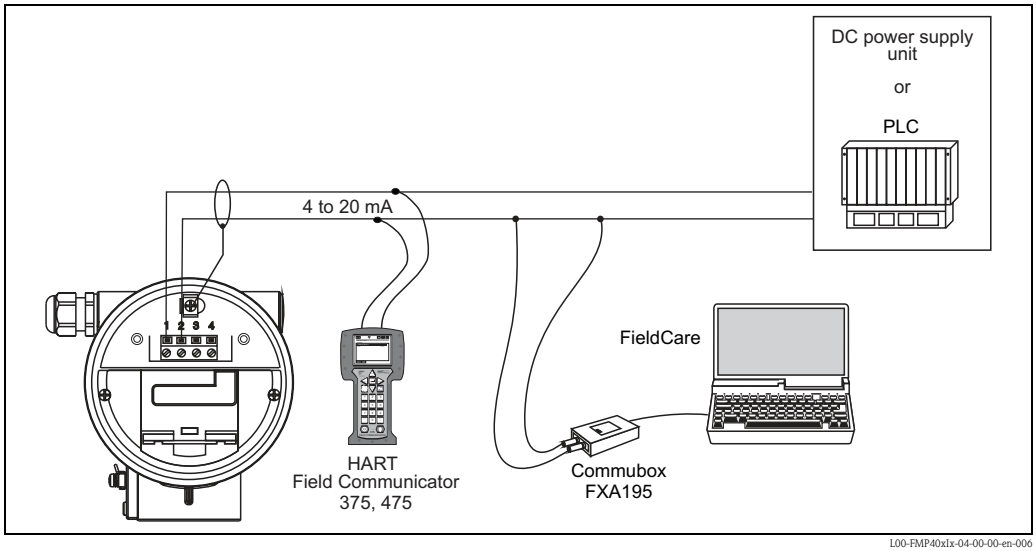

L00-FMP40xIx-04-00-00-en-006

4.3 Recommended connection

4.3.1 Potential equalization

Connect the potential equalization to the external ground terminal (1) of the transmitter.

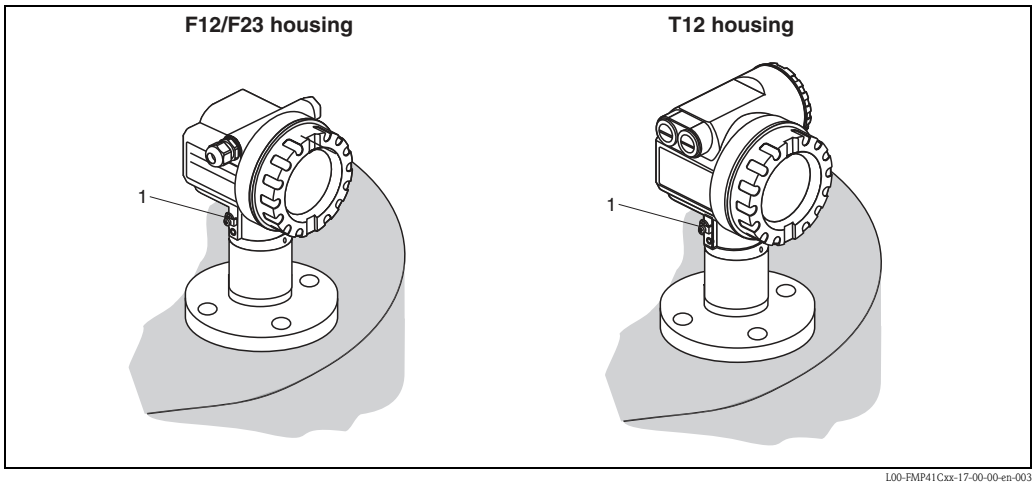

4.3.2 Wiring the shielded cable

Caution!
In Ex applications, the device must only be grounded on the sensor side. Further safety instructions are given in the separate documentation for applications in hazardous areas.

4.4 Degree of protection

- with closed housing tested according to:
  - all housings:
    - IP68, NEMA6P (24 h at 1,83 m under water)
    - IP66, NEMA4X
  - F23 housing: additionally IP69K in connection with M20, G½" and NPT½" cable entries
- with open housing: IP20, NEMA1 also ingress protection of the display)

4.5 Post-connection check

After wiring the measuring device, perform the following checks:
- Is the terminal assignment correct (→ 24, 25)?
- Is the cable gland tight?
- Is the housing cover screwed tight?
- If power is supplied:
  Is the device ready for operation and is the LCD display lit?

5 Operation

5.1 Quick operation guide

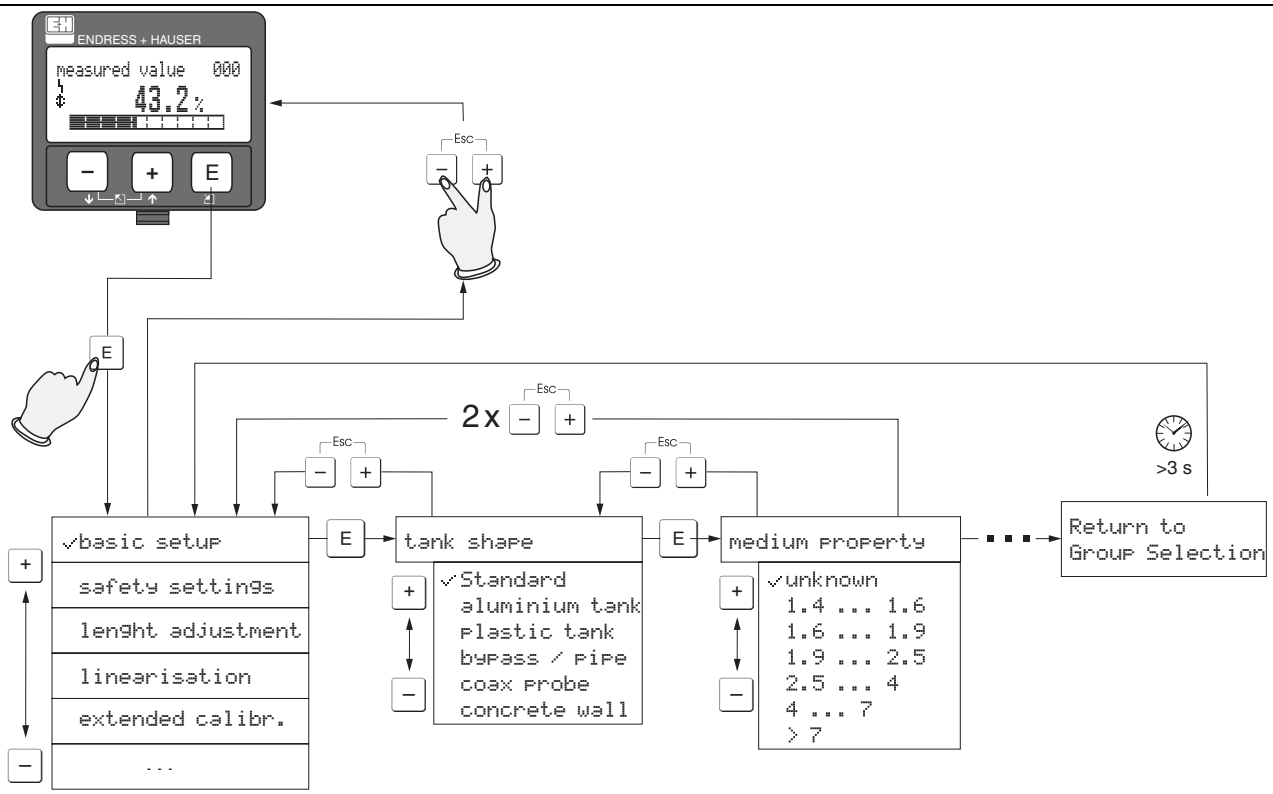

Selection and configuration in Operation menu:

1.) Change from Measured Value Display to **Group Selection** by pressing E

2.) Press − or + to select the required **Function Group** (e.g.. "basic setup (00)") and confirm by pressing E ➜ First f**unction** (e.g. "tank shape (002)") is selected.

Note!
The active selection is marked by a ✔ in front of the menu text.

3.) Activate Edit mode with + or −.

Selection menus:

a) Select the required **Parameter** in selected **function** (e.g. "tank shape (002)") with − or +.
b) E confirms selection ➜ ✔ appears in front of the selected parameter
c) E confirms the edited value ➜ system quits Edit mode
d) + / − (= Esc) interrupts selection ➜ system quits Edit mode

Typing in numerals and text:

a) Press + or − to edit the first character of the **numeral / text** (e.g. "empty calibr. (005)")
b) E positions the cursor at the next character ➜ continue with (a) until you have completed your input
c) if a ↵ symbol appears at the cursor, press E to accept the value entered ➜ system quits Edit mode
d) + / − (= Esc) interrupts the input, system quits Edit mode

4) Press E to select the next **function** (e.g. "medium property (003)")

5) Press + / − (= Esc) once ➜ return to previous **function** (e.g. "tank shape (002)")
Press + / − (= Esc) twice ➜ return to **Group selection**

6) Press + / − (= Esc) to return to **Measured value display**

L00-FMP4xxxx-19-00-00-en-001

5.1.1 General structure of the operating menu

The operating menu is made up of two levels:

- **Function groups (00, 01, 03, …, 0C, 0D):**
  The individual operating options of the device are split up roughly into different function groups. The function groups that are available include, e.g.: "**basic setup**", "**safety settings**.", "**output**", "**display**", etc.
- **Functions (001, 002, 003, …, 0D8, 0D9):**
  Each function group consists of one or more functions. The functions perform the actual operation or parameterisation of the device. Numerical values can be entered here and parameters can be selected and saved. The available functions of the "**basic setup**" **(00)** function group include, e.g.: "**tank properties**" **(002)**, "**medium property**" **(003)**, "**process cond.**" **(004)**, "**empty calibr.**" **(005)**, etc.

If, for example, the application of the device is to be changed, carry out the following procedure:

1. Select the "**basic setup**" **(00)** function group.
2. Select the "**tank properties**" **(002)** function (where the existing tank shape is selected).

5.1.2 Identifying the functions

For simple orientation within the function menus, for each function a position is shown on the display.

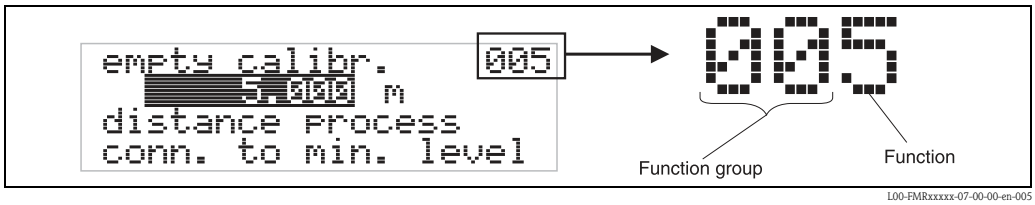

The first two digits identify the function group:

- **basic setup** **00**
- **safety settings** **01**
- **linearisation** **04**

...

The third digit numbers the individual functions within the function group:

- **basic setup** **00** →
  - **tank properties** **002**
  - **medium property** **003**
  - **process cond.** **004**

  ...

Here after the position is always given in brackets (e.g. "**tank properties**" **(002)**) after the described function.

5.2 Display and operating elements

5.2.1 Liquid crystal display (LCD)

Four lines with 20 characters each. Display contrast adjustable through key combination.

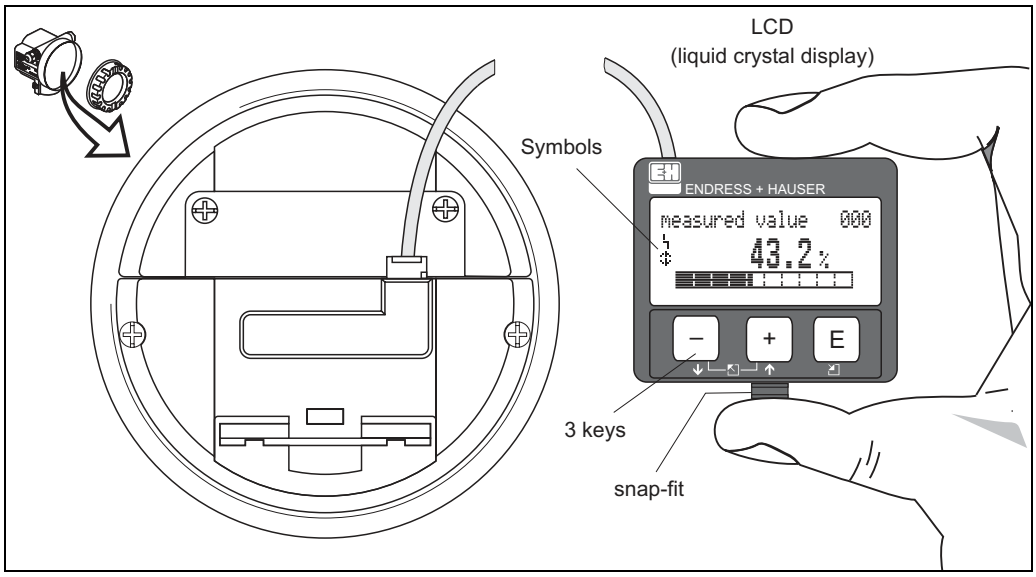

L00-FMxxxxxx-07-00-00-en-001

The VU331 LCD display can be removed to ease operation by simply pressing the snap-fit (see graphic above). It is connected to the device by means of a 500 mm cable.

5.2.2 Display

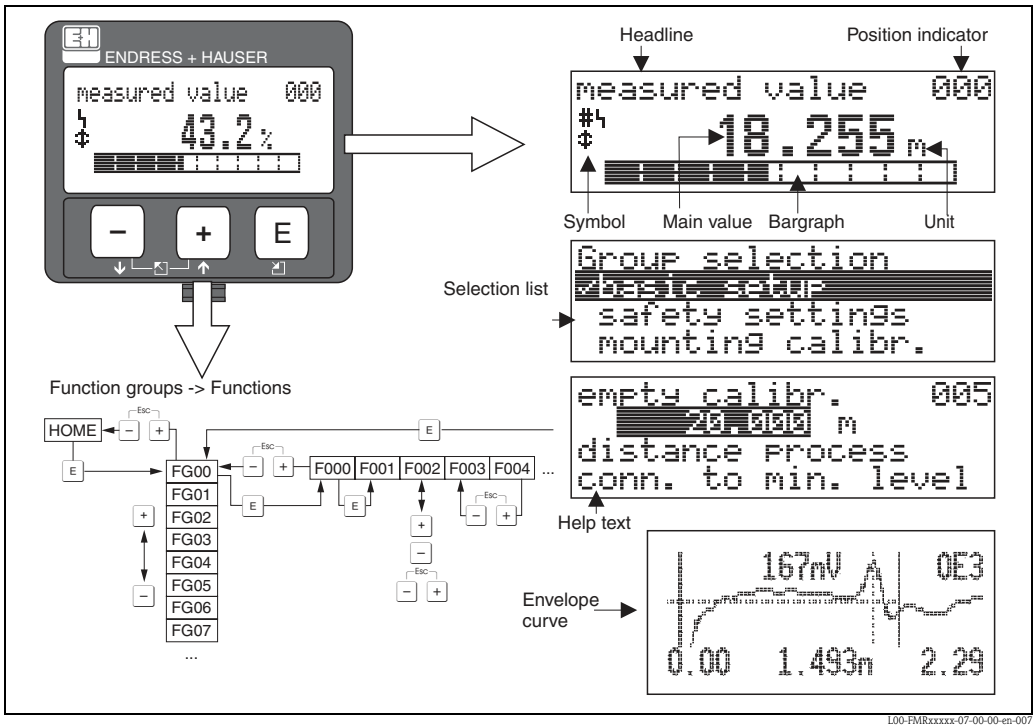

L00-FMRxxxxx-07-00-00-en-007

5.2.3 Display symbols

The following table describes the symbols that appear on the liquid crystal display:

Sybmol	Meaning
	**ALARM_SYMBOL** This alarm symbol appears when the device is in an alarm state. If the symbol flashes, this indicates a warning.
	**LOCK_SYMBOL** This lock symbol appears when the device is locked, i.e. if no input is possible.
	**COM_SYMBOL** This communication symbol appears when a data transmission via e.g. HART, PROFIBUS PA or FOUNDATION Fieldbus is in progress.

5.2.4 Key assignment

The operating elements are located inside the housing and are accessible for operation by opening the lid of the housing.

Function of the keys

Key(s)	Meaning
+ or ↑	Navigate upwards in the selection list. Edit numeric value within a function.
− or ↓	Navigate downwards in the selection list. Edit numeric value within a function.
Esc − + or ←	Navigate to the left within a function group.
E	Navigate to the right within a function group, confirmation.
+ and E or − and E	Contrast settings of the LCD.
+ and − and E	Hardware lock / unlock After a hardware lock, an operation of the device via display or communication is not possible! The hardware can only be unlocked via the display. An unlock parameter must be entered to do so.

5.3 Local operation

5.3.1 Locking of the configuration mode

The Levelflex can be protected in two ways against unauthorised changing of device data, numerical values or factory settings:

Function "unlock parameter" (0A4):

A value **<> 100** (e.g. 99) must be entered in "**unlock parameter**" **(0A4)** in the "**diagnostics**" **(0A)** function group. The lock is shown on the display by the symbol and can be released again either via the display or by communication.

Hardware lock:

The device is locked by pressing the [+], [−] and [E] keys at the same time.
The lock is shown on the display by the symbol and can **only** be unlocked again via the display by pressing the [+], [−] and [E] keys at the same time again. It is **not** possible to unlock the hardware by communication. All parameters can be displayed even if the device is locked.

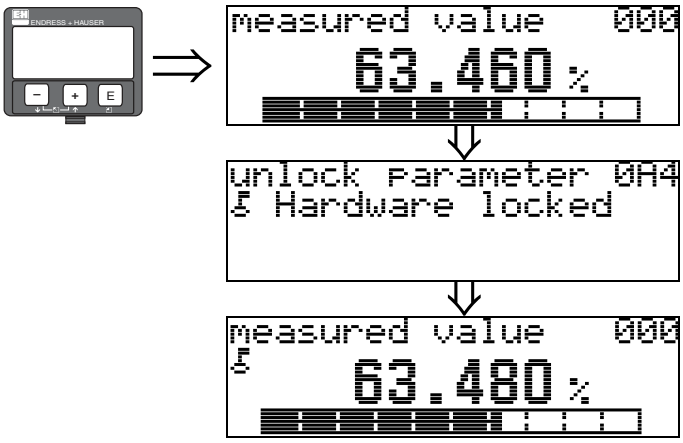

[+], [−] and [E] press simultaneous

The LOCK_SYMBOL appears on the LCD

5.3.2 Unlocking of configuration mode

If an attempt is made to change parameters when the device is locked, the user is automatically requested to unlock the device:

Function "unlock parameter" (0A4):

By entering the unlock parameter (on the display or via communication)

100 = for HART devices

the Levelflex is released for operation.

Hardware unlock:

After pressing the [+], [−] and [E] keys at the same time, the user is asked to enter the unlock parameter

100 = for HART devices

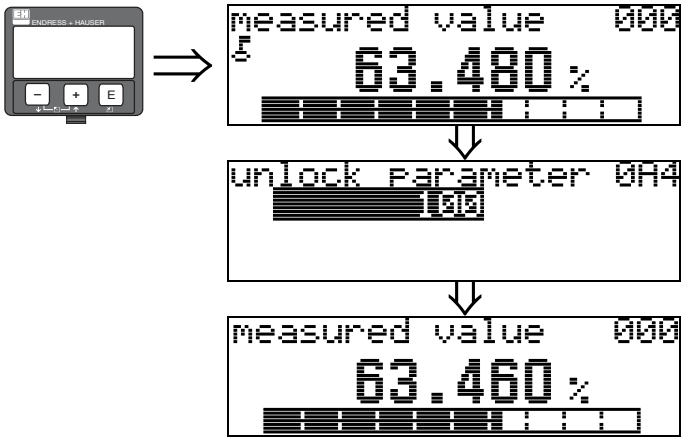

[+], [−] and [E] press simultaneous

Please enter unlock code and confirm with [E]

Caution!
Changing certain parameters such as all sensor characteristics, for example, influences numerous functions of the entire measuring system, particularly measuring accuracy. There is no need to change these parameters under normal circumstances and consequently, they are protected by a special code known only to the Endress+Hauser service organization.
Please contact Endress+Hauser if you have any questions.

5.3.3 Factory settings (Reset)

Caution!
A reset sets the device back to the factory settings. This can lead to an impairment of the measurement. Generally, you should perform a basic setup again following a reset.

A reset is only necessary if the device...
- ...no longer functions
- ...must be moved from one measuring point to another
- ...is being de-installed /put into storage/installed



User input ("reset" (0A3)):

- 333 = customer parameters

333 = reset customer parameters

This reset is recommended whenever an device with an unknown "history" is to be used in an application:
- The Levelflex is reset to the default values.
- **The customer specific tank map is not deleted.**
- The mapping can also be deleted in the "**cust. tank map**" **(055)** function of the "**extended calibr**" **(05)** function group.
- A linearisation is switched to "**linear**" although the table values are retained. The table can be reactivated in the "**linearisation**" **(04)** function group.

List of functions that are affected by a reset:

- tank properties (002)
- medium cond. (003)
- process proper. (004)
- empty calibr. (005)
- full calibr. (006)
- output on alarm (010)
- output on alarm (011)
- outp. echo loss (012)
- ramp %span/min (013)
- delay time (014)
- safety distance. (015)
- in safety dist. (016)
- overspill protection (018)
- end of probe (030)
- level/ullage (040)
- linearisation (041)
- customer unit (042)
- max. scale (046)
- diameter vessel (047)
- check distance (051)
- range of mapping (052)
- start mapping (053)
- offset (057)
- output damping (058)
- low output limit (062)
- curr. output mode (063)
- fixed cur. value (064)
- 4mA value (068)
- language (092)
- back to home (093)
- format display (094)
- no of decimals (095)
- sep. character (096)
- unlock parameter (0A4)

A complete "**basic setup**" **(00)** must be activated.

5.4 Display and acknowledging error messages

Type of error

Errors that occur during commissioning or measuring are displayed immediately on the local display. If two or more system or process errors occur, the error with the highest priority is the one shown on the display.

The measuring system distinguishes between two types of error:

- **A (Alarm):**
  Device goes into a defined state (e.g. max 22 mA)
  Indicated by a constant symbol.
  (For a description of the codes, → 68)
- **W (Warning):**
  Device continue measuring, error message is displayed.
  Indicated by a flashing symbol.
  (For a description of the codes, → 68)
- **E (Alarm / Warning):**
  Configurable (e.g. loss of echo, level within the safety distance)
  Indicated by a constant/flashing symbol.
  (For a description of the codes, → 68)



Error messages

Error messages appear as four lines of plain text on the display. In addition, a unique error code is also output. A description of the error codes, → 68.

- The "**diagnostics**" **(0A)** function group can display current errors as well as the last errors that occurred.
- If several current errors occur, use + or − to page through the error messages.
- The last occurring error can be deleted in the "**diagnostics**" **(0A)** function group with the function "**clear last error**" **(0A2)**.

5.5 HART communication

Apart from local operation, you can also parameterise the measuring device and view measured values by means of a HART protocol. There are two options available for operation:
- Operation via the Field Communicator 375, 475
- Operation via the Personal Computer (PC) using the operating program (e.g. FieldCare: for connections, → 28).

5.5.1 Operation with the Field Communicator 375, 475

With the terminal Field Communicator 375, 475, you can configure all the device functions via menu operation.

Note!
Further information on the HART handheld unit is given in the respective operating manual included in the transport bag of the Field Communicator 375, 475.

5.5.2 Endress+Hauser operating program

The operating program FieldCare is an Endress+Hauser Plant Asset Management Tool based on FDT technology. You can use Field-Care to configure all your Endress+Hauser devices, as well as devices from other manufacturers that support the FDT standard. Hardware and software requirements you can find on the internet:
www.endress.com → select your country → search: FieldCare → FieldCare → Technical Data.

FieldCare supports the following functions:
- Online configuration of transmitters
- Signal analysis via envelope curve
- Tank linearization
- Loading and saving of device data (upload/download)
- Documentation of the measuring point

Connection options:
- HART via Commubox FXA195 and the USB port of a computer
- Commubox FXA291 with ToF Adapter FXA291 via service interface.

Menu-guided commissioning

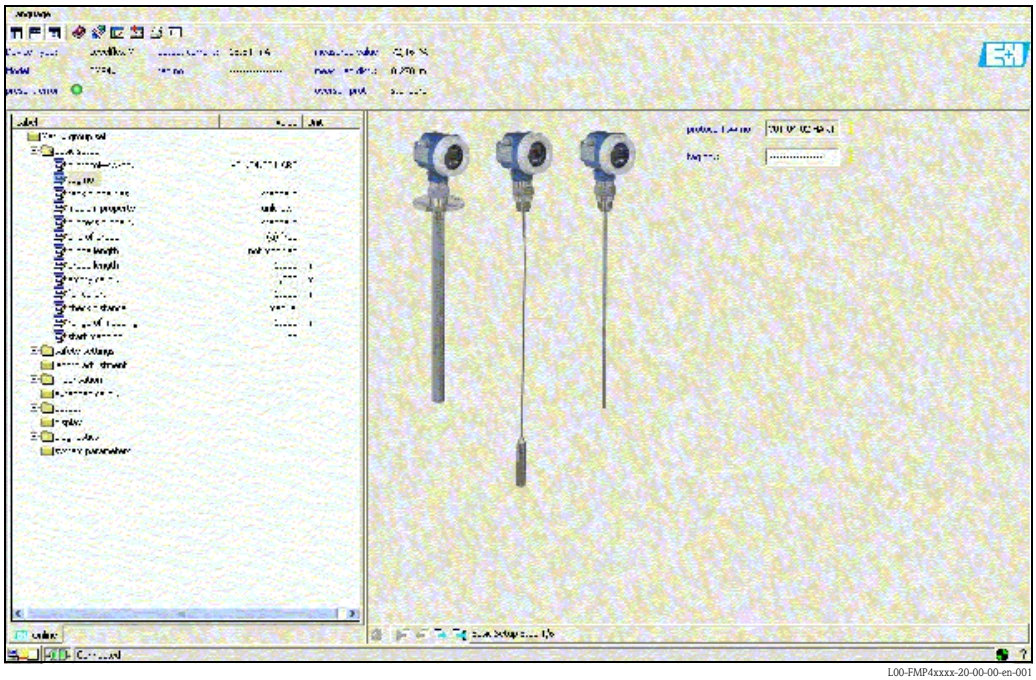

L00-FMP4xxxx-20-00-00-en-001

Signal analysis via envelope curve

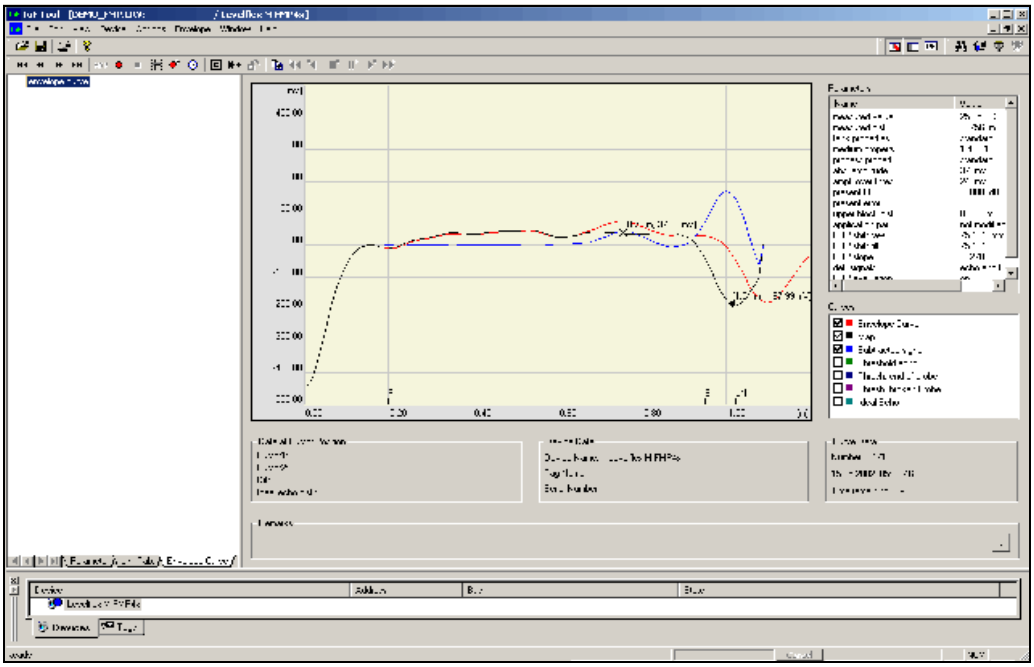

L00-FMP4xxxx-20-00-00-en-007

Tank linearization

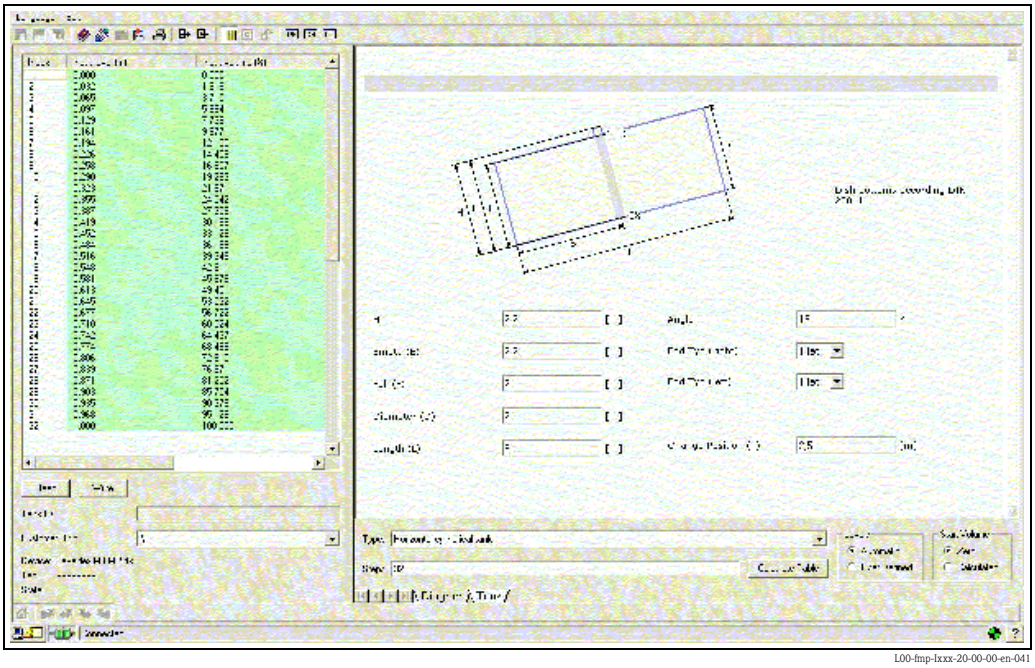

L00-fmp-lxxx-20-00-00-en-041

6 Commissioning

6.1 Function check

Make sure that all final checks have been completed before you start up your measuring point:
- Checklist "Post-installation check", → 20.
- Checklist "Post-connection check", → 29.

6.2 Switching on the measuring device

When the device is switched on for the first time, the following messages appear in a sequence of 5 s on the display: software version, communication protocoll and language selection

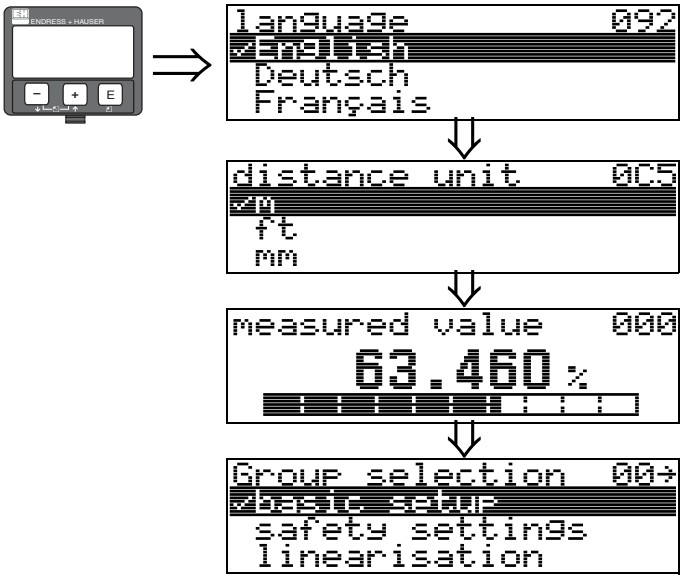

Select the language (this message appears the first time the device is switched on)

Select the basic unit (this message appears the first time the device is switched on)

The current measured value is displayed

After [E] is pressed, you reach the group selection

This selection enables you to perform the basic setup

6.3 Basic Setup

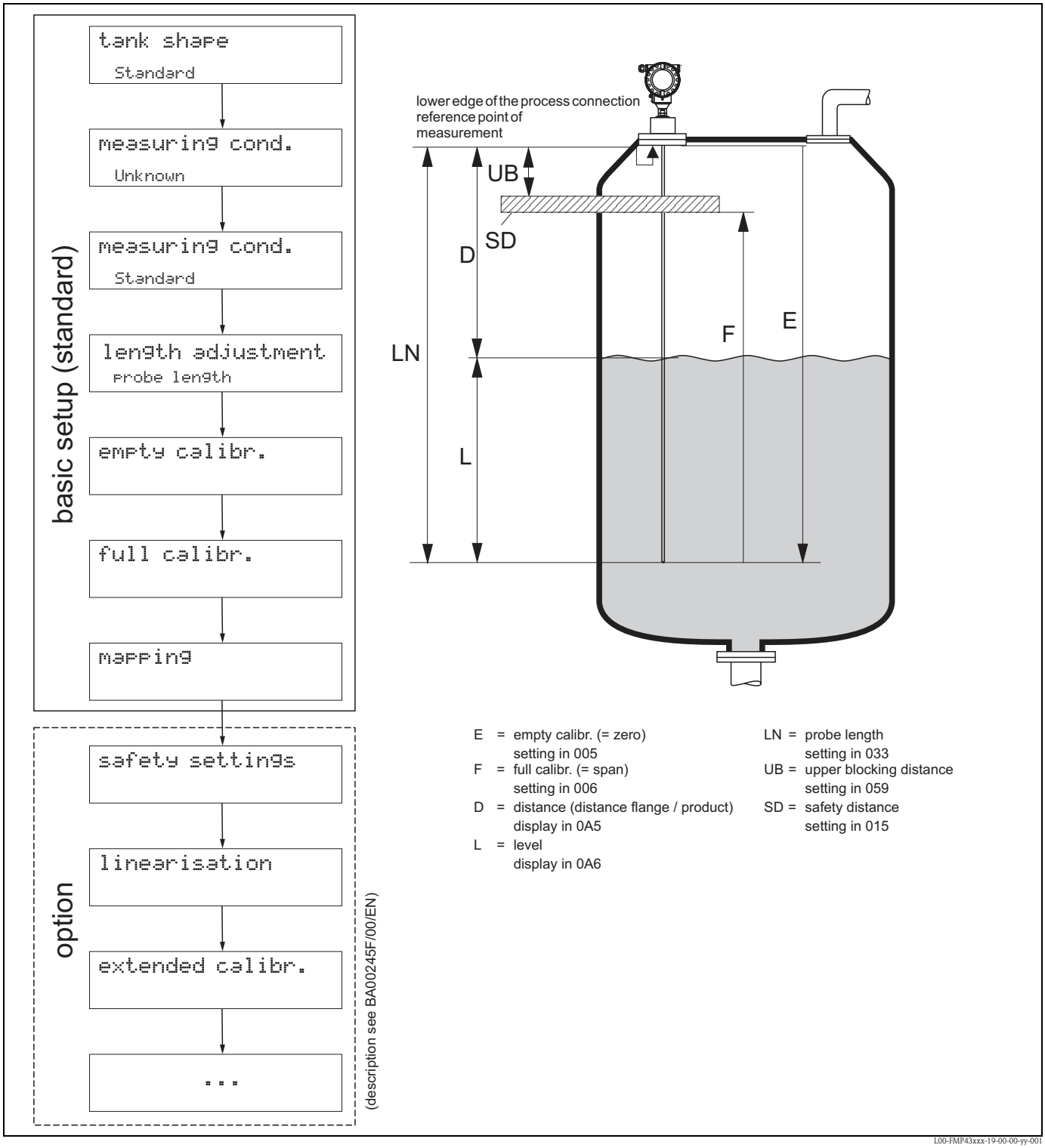

Caution!
The basic setup is sufficient for successful commissioning in most applications.
The Levelflex is initially adjusted at the factory to the probe length ordered, so that in most cases only the application parameters, that automatically adapt the device to the measuring conditions, need to be entered. For models with current output, the factory adjustment for zero point "E" and span "F" is 4 mA and 20 mA. For digital outputs and the display module, the factory adjustment for zero point "E" and span "F" is 0 % and 100 %.
A linearisation function with max. 32 points, that is based on a manually or semi-automatically input table, can be activated on-site or via remote operation. This function enables, for example, the conversion of the level into units of volume or weight.

Note!
The Levelflex M allows to check for broken probe. On delivery, this function is switched off, because otherwise shortening of the probe would be mistaken for a broken probe.
In order to activate this function, perform the following steps:

1. With the probe uncovered, perform a mapping ("**range of mapping**" **(052)** and "**start mapping.**" **(053)**).
2. Activate the "**broken probe det**" **(019)** function in the "**safety settings**" **(01)** function group.

Complex measuring operations necessitate additional functions that the user can use to customise the Levelflex as necessary to suit his specific requirements. The functions available to do this are described in detail in the BA00245F/00/EN.
Comply with the following instructions when configuring the functions in the "**basic setup**" **(00)**:

- Select the functions as described, → 30.
- Certain functions (e.g. starting an interference echo mapping (053)) prompt you to confirm your data entries. Press [+] or [−] to select "**YES**" and press [E] to confirm. The function is now started.
- If you do not press a key during a configurable time period (→ function group "**display (09)**") , an automatic return is made to the home position (measured value display).

Note!

- The device continues to measure while data entry is in progress, i.e. the current measured values are output via the signal outputs in the normal way.
- If the envelope curve mode is active on the display, the measured values are updated in a slower cycle time. Thus, it is advisable to leave the envelope curve mode after the measuring point has been optimised.
- If the power supply fails, all preset and parameterised values remain safely stored in the EEPROM.
- All functions are described in detail, as is the overview of the operating menu itself, in the manual **"BA00245F – Description of Instrument Functions"** on the enclosed CD-ROM.

6.4 Basic Setup with the VU331

Function "measured value" (000)



This function displays the current measured value in the selected unit (see "**customer unit**" **(042)**) function). The number of digits after decimal point can be selected in the "**no.of decimals**" **(095)** function.

6.4.1 Function group "basic setup" (00)



Function "tank properties" (002)

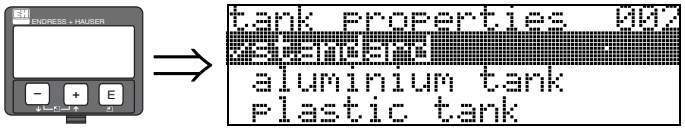

This function is used to select the tank properties.

Selection:
- **standard**
- aluminium tank
- plastic tank
- bypass / pipe
- coax probe
- concrete wall

standard

The "**standard**" option is recommended for normal containers for rod and rope probes.

aluminium tank

The "**aluminium tank**" option is designed especially for high aluminium silos that cause an increased level of noise when empty. This option is only useful for probes longer than 4 m. For short probes (< 4 m) select the "**standard**" option!

Note!
If "**aluminium tank**" is selected, the device calibrates of its own accord when first filled, depending on the medium's properties. Slope errors can, therefore, occur when beginning the first filling procedure.

plastic tank

Select the "**plastic tank**" option when installing probes in wood or plastic containers **without** metallic surfaces at the process connection (see installation in plastic containers). When using a metallic surface at the process connection, the "**standard**" option is sufficient!

Note!
In principle the employment of a metallic surface area should be preferred at the process connection!

bypass / pipe

The "**bypass / pipe**" option is designed especially for the installation of probes in a bypass or a stilling well. If this option is selected, the upper blocking distance is preset to 100 mm.

coax probe

Select the "**coax probe**" option when using a coaxial probe. When this setting is made, the evaluation is adapted to the high sensitivity of the coax probe. This option should, therefore, **not** be selected when using rope or rod probes.

concrete wall

The "**concrete wall**" option takes into account the signal-damping property of concrete walls when mounting with < 1 m distance to the wall.

Function "medium property" (003)

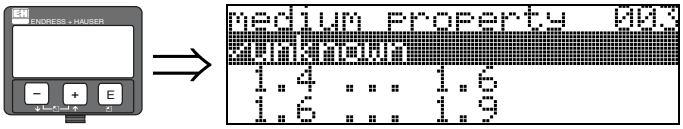

This function is used to select the dielectric constant.

Selection:
- **unknown**
- 1.4 ... 1.6 (use coaxial or Rod probe with installation in metallic pipes ≤ DN150)
- 1.6 ... 1.9
- 1.9 ... 2.5
- 2.5 ... 4.0
- 4.0 ... 7.0
- > 7.0

Media group	DC (εr)	Typical liquids	Measuring range
1	1.4 to 1.6	– Condensed gases, e.g. N_2, CO_2	-
2	1.6 to 1.9	– Liquefied gas, e.g. Propane – Solvent – Frigen / Freon – Palm oil	4 m
3	1.9 to 2.5	– Mineral oils, fuels	
4	2.5 to 4	– Benzene, styrene, toluene – Furan – Naphthalene	
5	4 to 7	– Chlorobenzene, chloroform – Cellulose spray – Isocyanate, aniline	
6	> 7	– Aqueous solutions – Alcohols – Ammonia	

The lower group applies to very loose or loosened bulk solids. Reduction of the max. possible measuring range by means of:
- Extremely loose surfaces of bulk solids, e.g. bulk solids with low piled density when filled pneumatically.
- Build-up, primarily of moist products.

Note!
Due to the high diffusion rate of ammonia it is recommended to use the FMP45 with gas-tight bushing for measurements in this medium.

Function "process propert." (004)

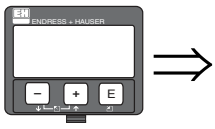



Use this function to adapt the device reaction to the filling speed in the tank. The setting impacts on an intelligent filter.

Selection:
- **standard**
- fast change
- slow change
- test:no filter

Selection:	standard	fast change	slow change	test:no filter
Application:	For all normal applications, bulk solids and fluids at low to medium filling speed and sufficiently large tanks.	Small tanks, primarily with fluids, at high filling speeds.	Applications with strong surface movement, e.g. caused by stirrer, primarily large tanks with slow to medium filling speed.	Shortest reaction time: ■ For test purposes ■ Measurement in small tanks at high filling speeds, if "rapid change" setting is too slow.
2-wire electronics:	Dead time: 4 s Rise time: 18 s	Dead time: 2 s Rise time: 5 s	Dead time: 6 s Rise time: 40 s	Dead time: 1 s Rise time: 0 s
4-wire electronics:	Dead time: 2 s Rise time: 11 s	Dead time: 1 s Rise time: 3 s	Dead time: 3 s Rise time: 25 s	Dead time: 0,7 s Rise time: 0 s

Function "end of probe" (030)

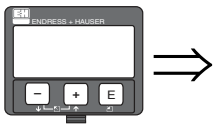

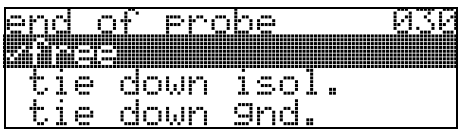

Use this function to select the polarity of the probe end signal. If the probe end is uncovered or in an insulated attachment, there is a negative probe end signal. The signal from the probe end is positive if the attachment is grounded and a metallic centering of probe end is used.

Selection:
- **free**
- tie down isol.
- tie down gnd.

Function "probe length" (031)

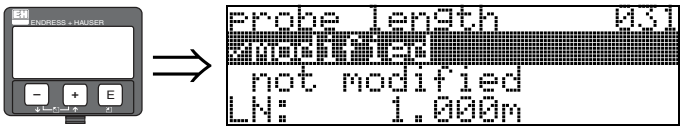

Use this function to select whether the probe length was changed after factory calibration. Only then is it necessary to enter or correct the probe length.

Selection:
- **not modified**
- modified

Note!
If "modified" was selected in the "**probe length**" **(031)** function, the probe length is defined in the next step.

Function "probe" (032)

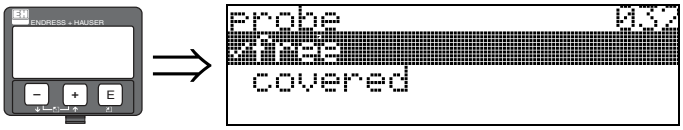

Use this function to select whether the probe is at the time of the commisioning uncovered or covered. If the probe is uncovered, the Levelflex can determine the probe length automatically by the "**determine length**" **(034)** function. If the probe is covered, a correct entry is required in the "**probe length**" **(033)** function.

Selection:
- **free**
- covered

Function "probe length" (033)

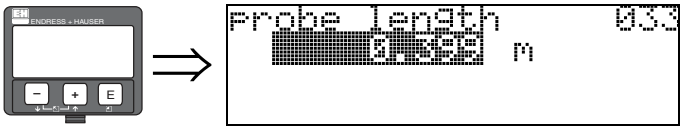

Use this function, the probe length can be entered manually.

Function "determine length" (034)

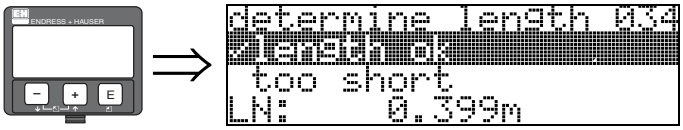

Use this function, the probe length can be determined automatically.
Due to the mounting conditions, the automatically determined probe length may be larger than the actual probe (typically 20 to 30 mm longer). This has no influence on the measuring accuracy.
When entering the empty value for a linearisation, please use the "empty calibration" instead of the automatically determined probe length.

Selection:
- **length ok**
- too short
- too long

After selection "length too short" or "length too long", the calculation of the new value need approx. 10 s.

Function "empty calibr." (005)

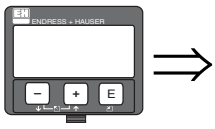

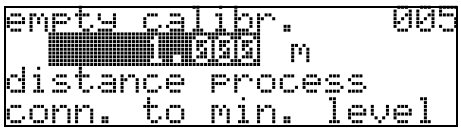

This function is used to enter the distance from the flange (reference point of the measurement) to the minimum level (= zero).

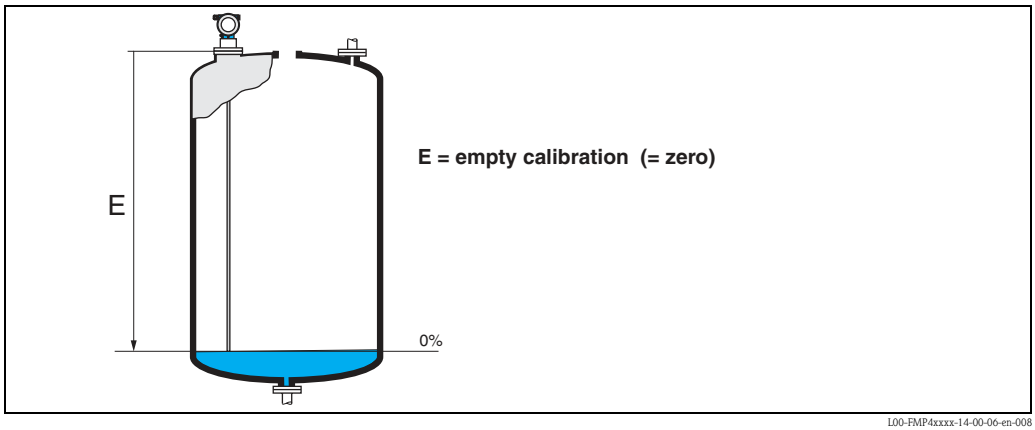

L00-FMP4xxxx-14-00-06-en-008

Function "full calibr." (006)

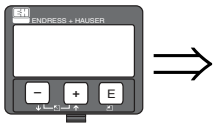

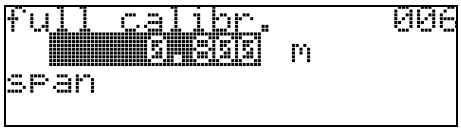

This function is used to enter the distance from the minimum level to the maximum level (= span).

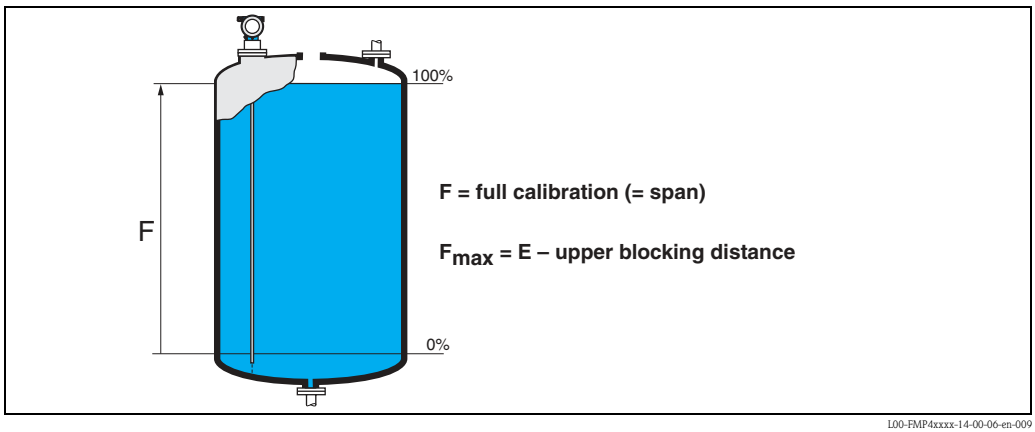

L00-FMP4xxxx-14-00-06-en-009

Note!
The usable measuring range lies between the upper blocking distance and the probe end.
The values for empty distance "E" and span "F" can be set independently of this.

Function "dist./meas.value" (008)

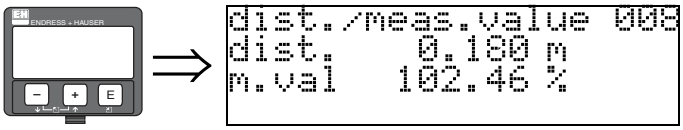

The **distance** measured from the reference point to the product surface and the **meas. value** calculated with the aid of the empty adjustment are displayed. Check whether the values correspond to the actual meas. value or the actual distance. The following cases can occur:

- Distance correct – meas. value correct → continue with the next function **check distance" (051)**
- Distance correct – meas. value incorrect → Check "**empty calibr." (005)**
- Distance incorrect – meas. value incorrect → continue with the next function "**check distance" (051)**

Function "check distance" (051)

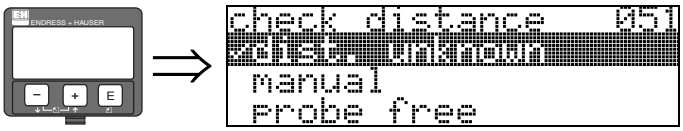

This function triggers the mapping of interference echoes. To do so, the measured distance must be compared with the actual distance to the product surface. The following options are available for selection:

Selection:

- distance = ok
- dist. too small
- dist. too big
- dist. unknown
- **manual**
- probe free

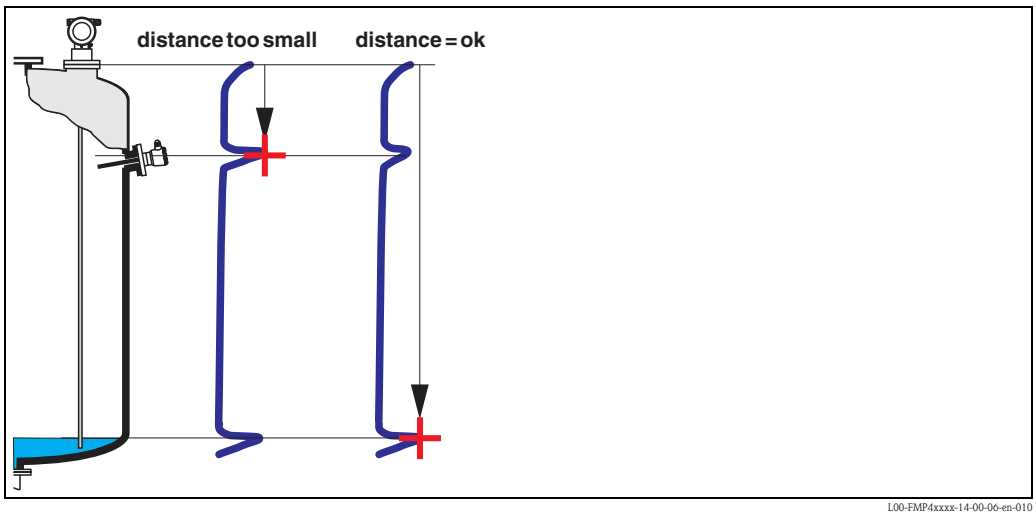

L00-FMP4xxxx-14-00-06-en-010

distance = ok
Use this function at part-covered probe. Choosing function "**manual**" or "**probe free**" at free probe.
- mapping is carried out up to the currently measured echo
- The range to be suppressed is suggested in the "**range of mapping**" **(052)** function

Anyway, it is wise to carry out a mapping even in this case.

Note!
At free probe, the mapping should be confirmed with the choice "**probe free**".

dist. too small
- At the moment, an interference is being evaluated
- Therefore, a mapping is carried out including the presently measured echoes
- The range to be suppressed is suggested in the "**range of mapping**" **(052)** function

dist. too big
- This error cannot be remedied by interference echo mapping
- Check the application parameters **(002), (003), (004)** and "**probe length.**" **(031)**

dist. unknown
If the actual distance is not known, no mapping can be carried out.

manual
A mapping is also possible by manual entry of the range to be suppressed. This entry is made in the "**range of mapping**" **(052)** function.

Caution!
The range of mapping must end 0.3 m (20") before the echo of the actual level. In case of empty vessel it is possible to make a map over the whole probe length.

probe free
If the probe is uncovered, mapping is carried out along the whole probe length.

Caution!
Only begin mapping in this function if the probe is safely uncovered. Otherwise, the device will not make correct measurements!

Function "range of mapping" (052)

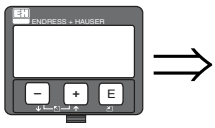

range of mapping 052
0.0000 m
input of
mapping range

This function displays the suggested range of mapping. The reference point is always the reference point of the measurement (→ 41). This value can be edited by the operator.
For manual mapping, the default value is 0,3 m.

Function "start mapping" (053)

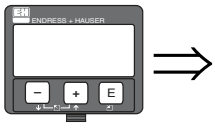

start mapping 053
✓off
on

This function is used to start the interference echo mapping up to the distance given in "**range of mapping**" **(052)**.

Selection:
- **off**: no mapping is carried out
- on: mapping is started

Function "dist./meas.value" (008)

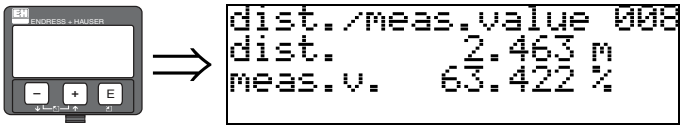

The distance measured from the reference point to the product surface and the meas. value calculated with the aid of the empty alignment are displayed again. Check whether the values correspond to the actual meas. value or the actual distance. The following cases can occur:

- Distance correct – meas. value correct → basic setup completed
- Distance incorrect – meas. value incorrect → a further interference echo mapping must be carried out "**check distance**" **(051)**
- Distance correct – meas. value incorrect → check "**empty calibr**" **(005)**

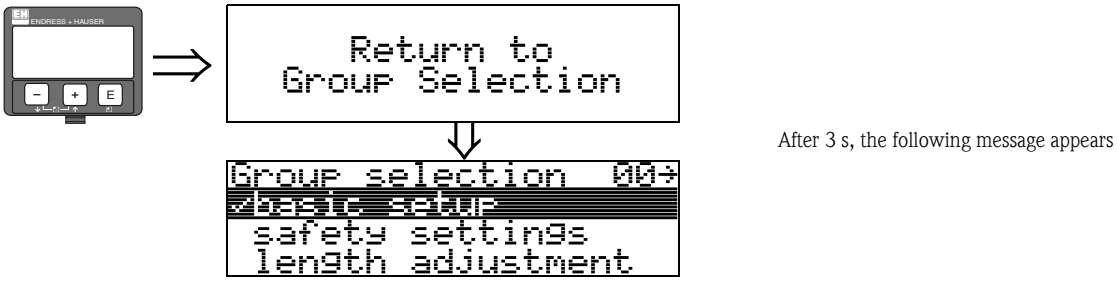

After 3 s, the following message appears

Note!
After the basic setup, an evaluation of the measurement with the aid of the envelope curve ("**envelope curve**" **(0E)** function group) is recommended (→ 53).

6.5 Blocking distance

Function "upper block. dist" (059)

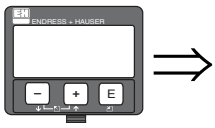

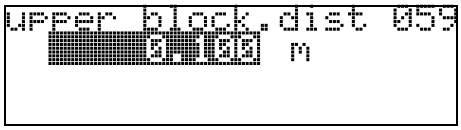

For rod probes and for rope probes with lengths of up to 8 m, the upper blocking distance is preset to 0.2 m on delivery.

The upper blocking distance (= UB) is the minimum distance from the reference point of the measurement (lower edge of the process connection) to the maximum level. At the lowest part of the probe an exact measurement is not possible, see "Performance characteristics", → 📄 75.

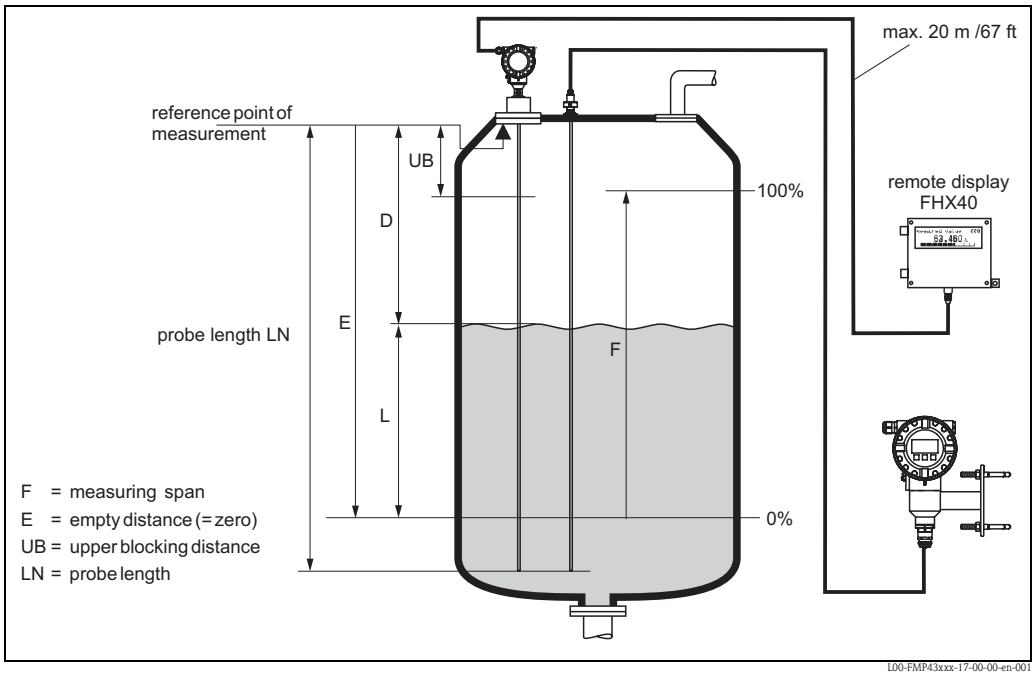

Reference point of measurement, details → 📄 41

The blocking distance can be reduced if the probe is mounted flush with the wall or in a nozzle, max. 50 mm in height.

When using a spray ball the blocking distance may not be smaller than 50 mm.

Maximum measured error

Typical statements for reference conditions:
DIN EN 61298-2, percentage of the span.

Output:	digital	analogue
sum of non-linearity, non-repeatability and hysteresis	±3 mm	± 0.06 %
Offset / Zero	±4 mm	± 0.03 %

If the reference conditions are not met, the offset/zero arising from the mounting situation may be up to ±12 mm. This additional offset/zero can be compensated for by entering a correction (function "**offset**" **(057)**) during commissioning.

Differing from this , the following measuring error is present in the vicinity of the probe end:

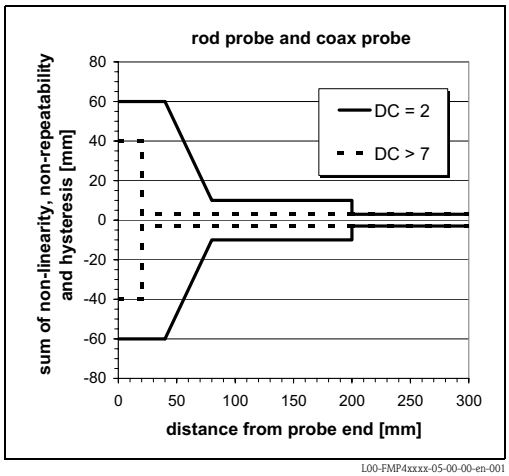

L00-FMP4xxxx-05-00-00-en-001

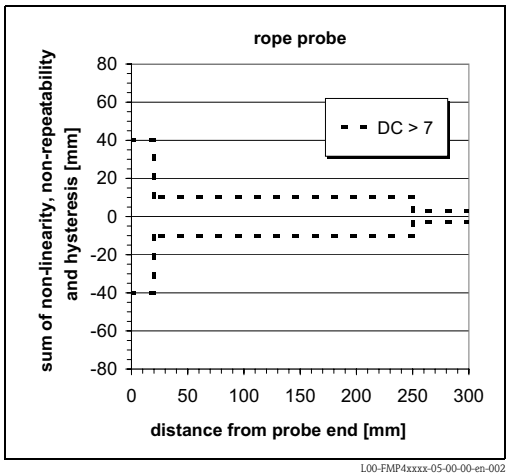

L00-FMP4xxxx-05-00-00-en-002

Note!
Please reenter the blocking distance in the function group "**extended calibr**." **(05)** function "**upper block.dist**" **(059)** when installing the device in a high nozzle:
upper blocking distance (UB) = nozzle height (H) + 50 mm.

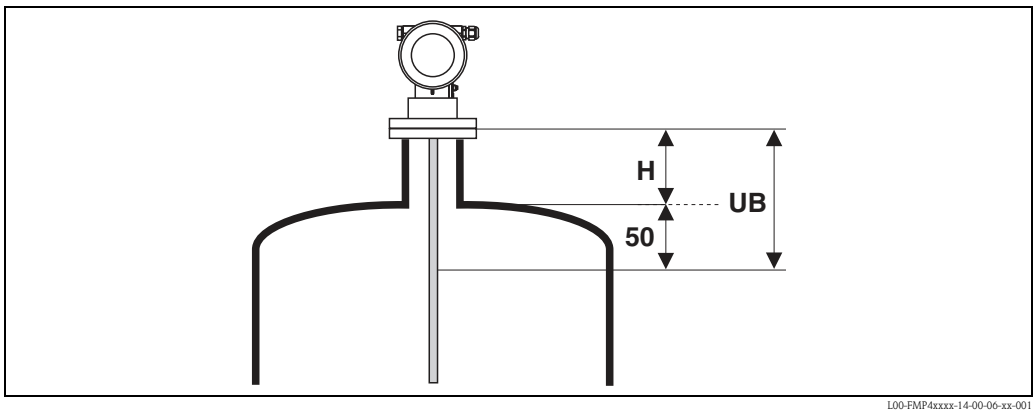

L00-FMP4xxxx-14-00-06-xx-001

6.6 Envelope curve with VU331

After the basic setup, an evaluation of the measurement with the aid of the envelope curve ("**envelope curve**" **(0E)**) function group) is recommended.).

6.6.1 Function "plot settings" (0E1)

Here you can select which information is shown on the display:
- **envelope curve**
- substracted signal
- mapping

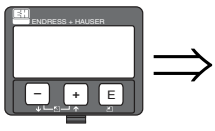

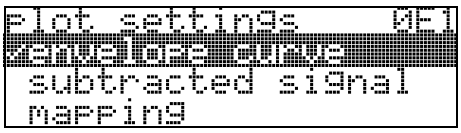



Note!
The interference echo suppression (map) are explained in BA00245F/00/EN "Description of Instrument Functions".

6.6.2 Function "recording curve" (0E2)

This function determines whether the envelope curve is read as
- **single curve** or
- cyclic

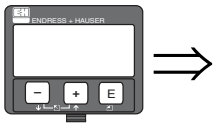

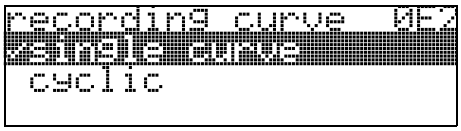



Note!
If the envelope curve mode is active on the display, the measured values are updated in a slower cycle time. Thus, it is advisable to leave the envelope curve mode after the measuring point has been optimised.

6.7 Function "envelope curve display" (0E3)

You can obtain the following information from the envelope curve display in this function:

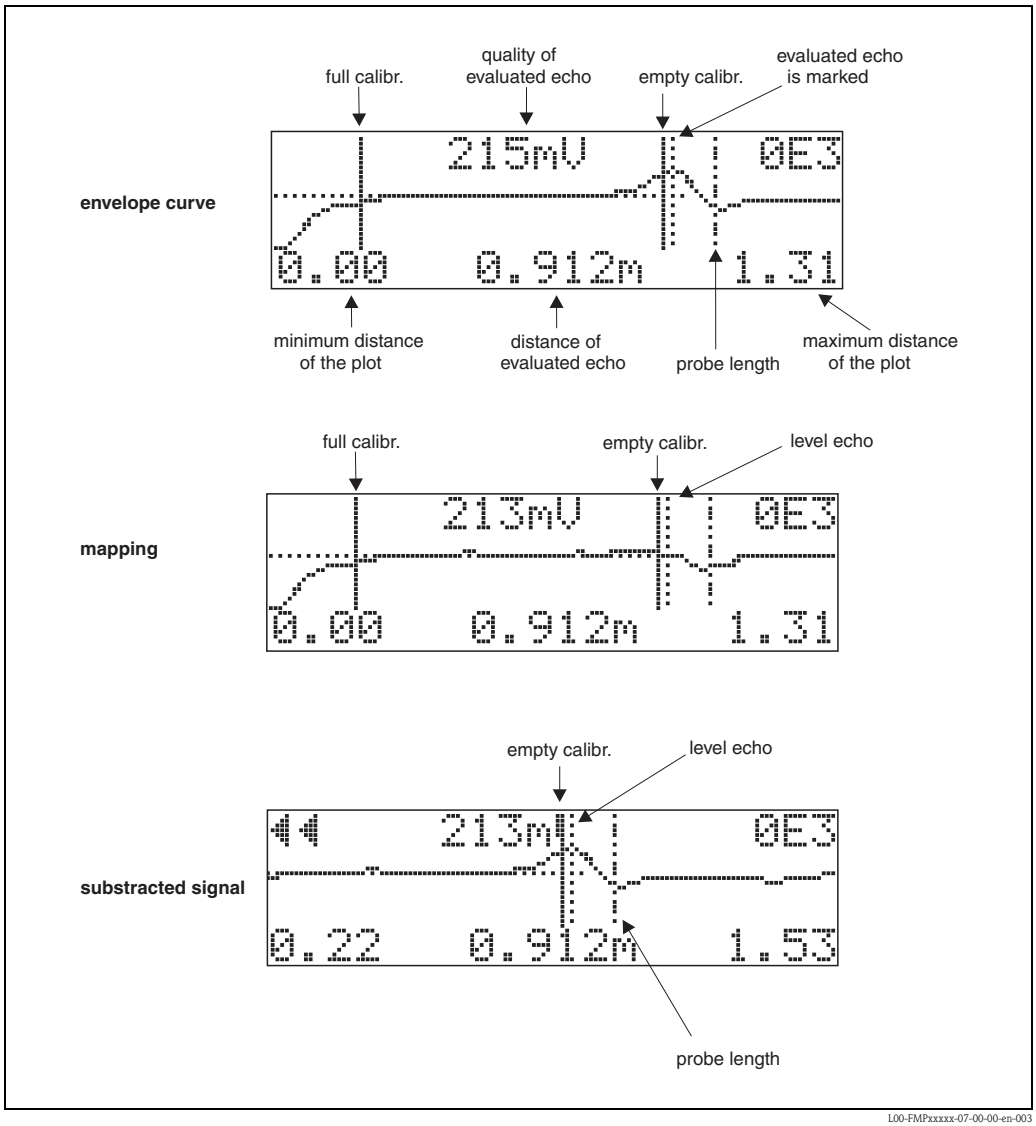

L00-FMPxxxxx-07-00-00-en-003

6.7.1 Envelope curve

The Levelflex emits individual pulses in quick succession and scans their reflection with a slightly variable delay. The energy values received are ordered by their time-of-flight. The graphic representation of this sequence is known as an "envelope curve".

6.7.2 Mapping (empty curve) and difference curve

To suppress interference signals, the envelope curve is not directly evaluated in the Levelflex.
The mapping (empty curve) is first subtracted from the envelope curve.
The system looks for level echoes in the resulting difference curve.
Difference curve = envelope curve – mapping (empty curve)
The mapping (empty curve) should be a good representation of the probe and the empty tank or silo. Ideally, only the signals from the medium being measured remain in the difference curve.

6.7.3 Mapping

- Factory mapping
  Mapping (empty curve) is already available in the device when the device is delivered.
- Customer mapping
  In a partially filled state, the distance up to 10 cm before the actual total level can be mapped (range of mapping = actual distance from total level - 10 cm), or values > LN can be mapped in the case of empty tanks.
- Dynamic mapping
  It is not static like factory and customer-specific interference echo suppression. Instead, it follows directly from static mapping and constantly adapts to the changing features of the probe environment during ongoing operation. Thus, dynamic mapping does not have to be recorded explicitly.

6.7.4 Echo threshold

Maximum points in the difference curve are only accepted as reflection signals if they are above a specified threshold. This threshold depends on the location and is automatically calculated from the ideal echo curve of the probe used. The calculation of the threshold in question depends on the "Installation" customer parameter in the extended calibration function.

6.7.5 Navigation in the envelope curve display

Using navigation, the envelope curve can be scaled horizontally and vertically and shifted to the left or the right. The active navigation mode is indicated by a symbol in the top left hand corner of the display.

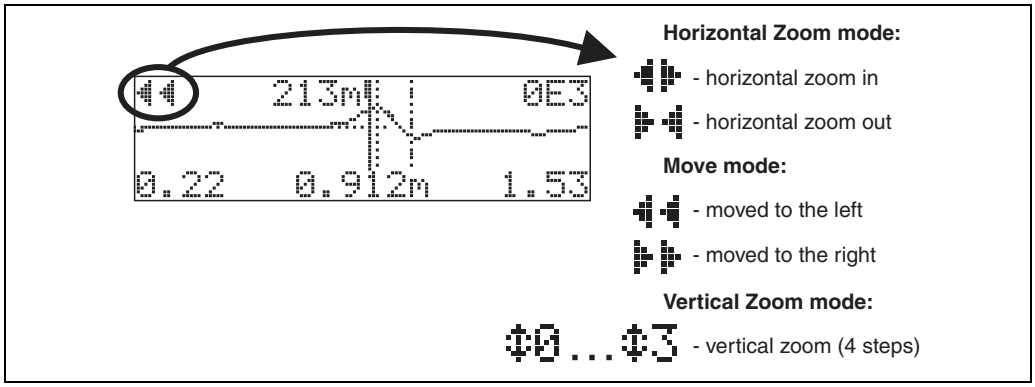

L00-FMPxxxxx-07-00-00-en-004

Horizontal-Zoom-Modus

Press [+] or [−], to switch to the envelope curve navigation. You are then in Horizontal Zoom mode. Either ◀▶ or ▶◀ is displayed.

You now have the following options:
- [+] increases the horizontal scale.
- [−] decreases the horizontal scale.

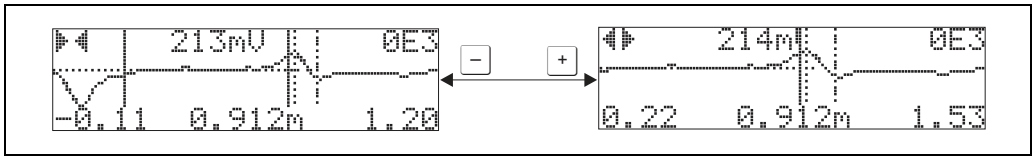

L00-FMPxxxxx-07-00-00-xx-001

Move-Modus

Then press [E], to switch to Move mode. Either ▶▶ or ◀◀ is displayed.

You now have the following options:
- [+] shifts the curve to the right.
- [−] shifts the curve to the left.

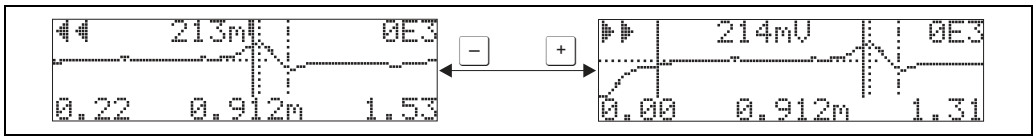

L00-FMPxxxxx-07-00-00-xx-002

Vertical-Zoom-Modus

Press [E], once more to switch to Vertical Zoom mode. ⇕1 is displayed.

You now have the following options:
- [+] increases the vertical scale.
- [−] decreases the vertical scale.

The display icon shows the current zoom factor (⇕0 to ⇕3).

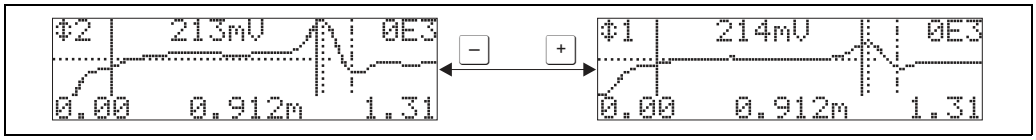

L00-FMPxxxxx-07-00-00-xx-003

Exiting the navigation

- Press [E] again to run through the different modes of the envelope curve navigation.
- Press [+] and [−] to exit the navigation. The set increases and shifts are retained. Only when you reactivate the "**recording curve**"**(0E2)** function does the Levelflex use the standard display again.

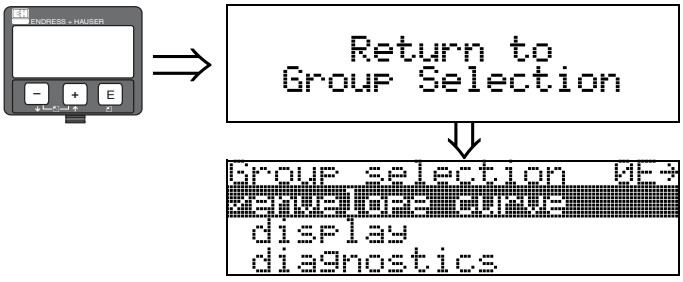

After 3 s, the following message appears

6.8 Basic setup with the Endress+Hauser operating program

To carry out the basic setup with the operating program, proceed as follows:
- Start the operating program and establish a connection.
- Select the **"basic setup"** function group in the navigation window.

The following display appears on the screen:

Basic setup step 1/6:
- Status image
- The TAG number can be entered.

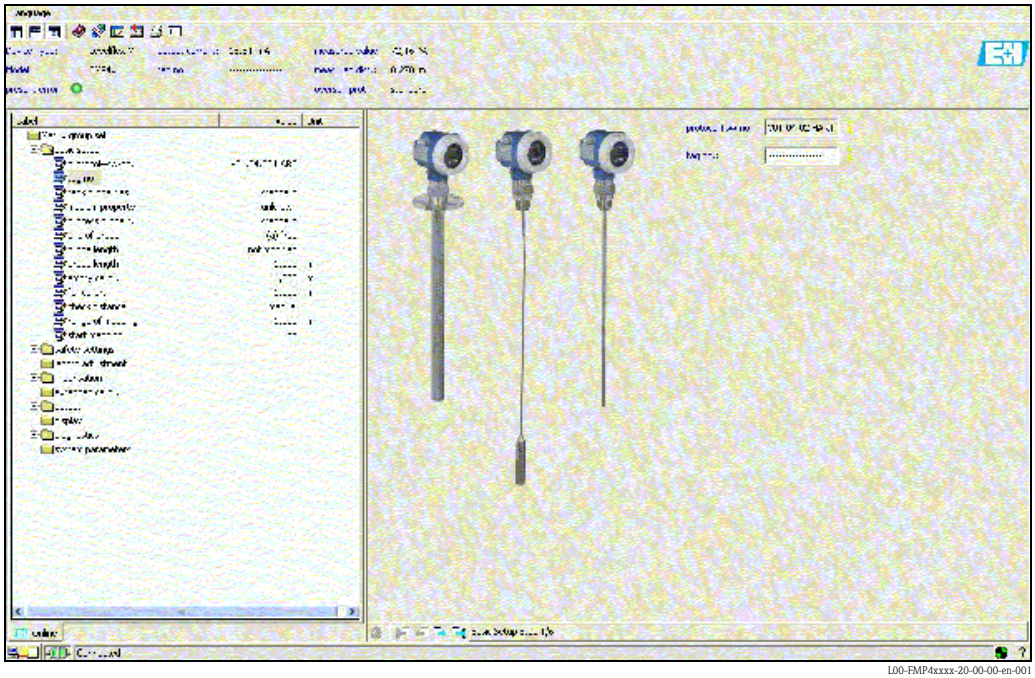

L00-FMP4xxxx-20-00-00-en-001

Note!
- Each parameter that is changed must be confirmed with the **RETURN** key!
- The "**Next**" button takes you to the next screen:

Basic setup step 2/6:

- Enter the application parameters (see chapter basic setup with "VU331"):
  - Tank properties
  - Medium properties
  - Process properties

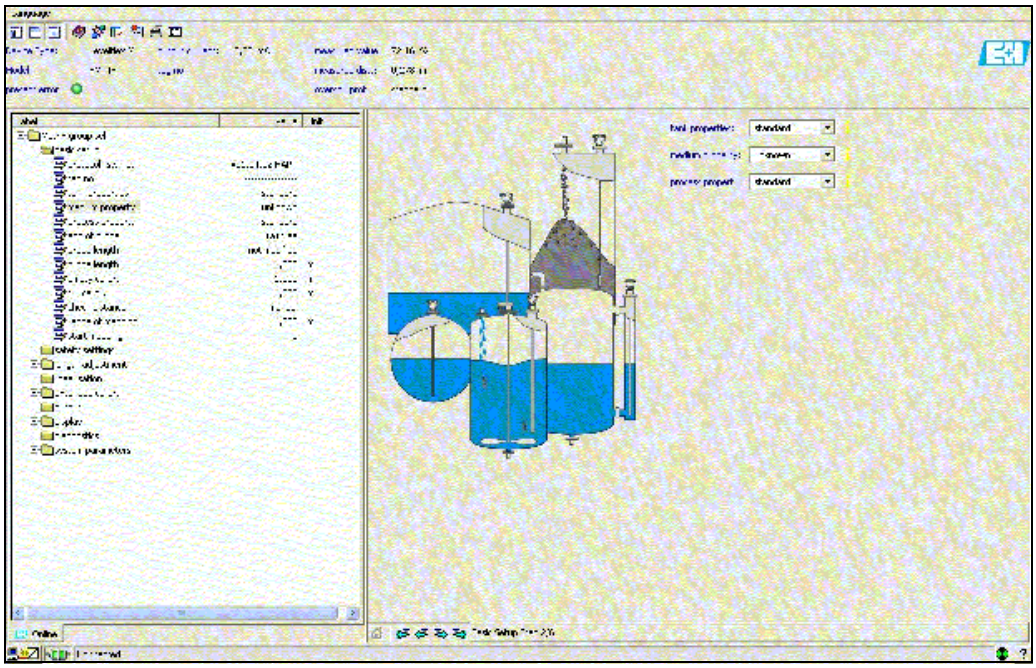

l00-fmp4xxxx-20-00-00-en-002

Basic setup step 3/6:

- Enter the application parameters (see chapter basic setup with "VU331"):
  - End of probe

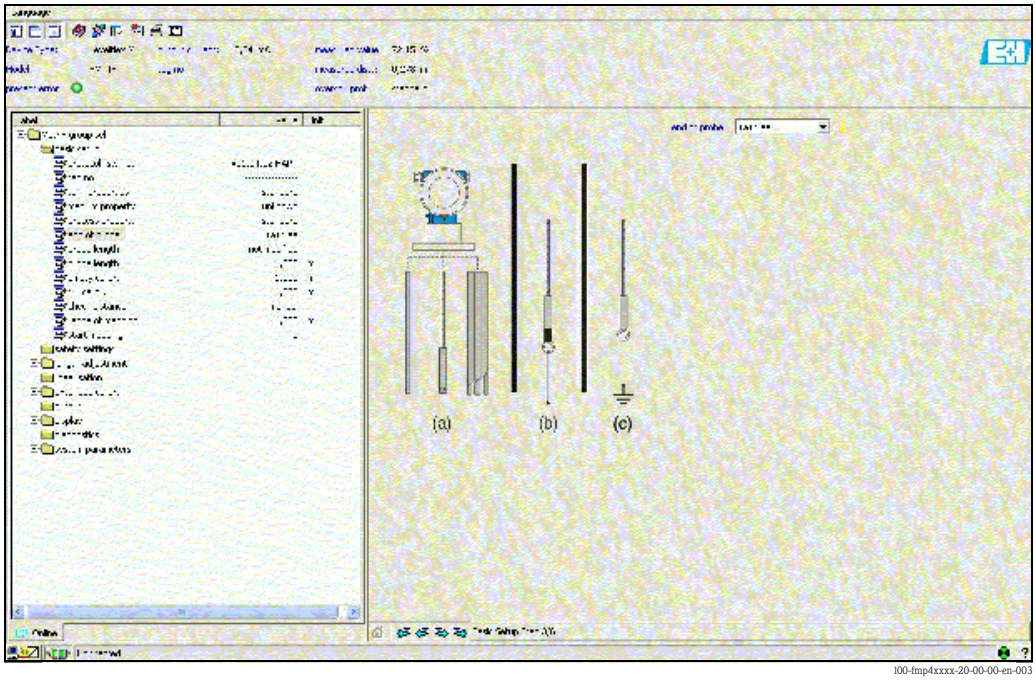

l00-fmp4xxxx-20-00-00-en-003

Basic setup step 4/6:

- Enter the application parameters (see chapter basic setup with "VU331"):
  - Probe length
  - Probe
  - Probe length
  - Determine length

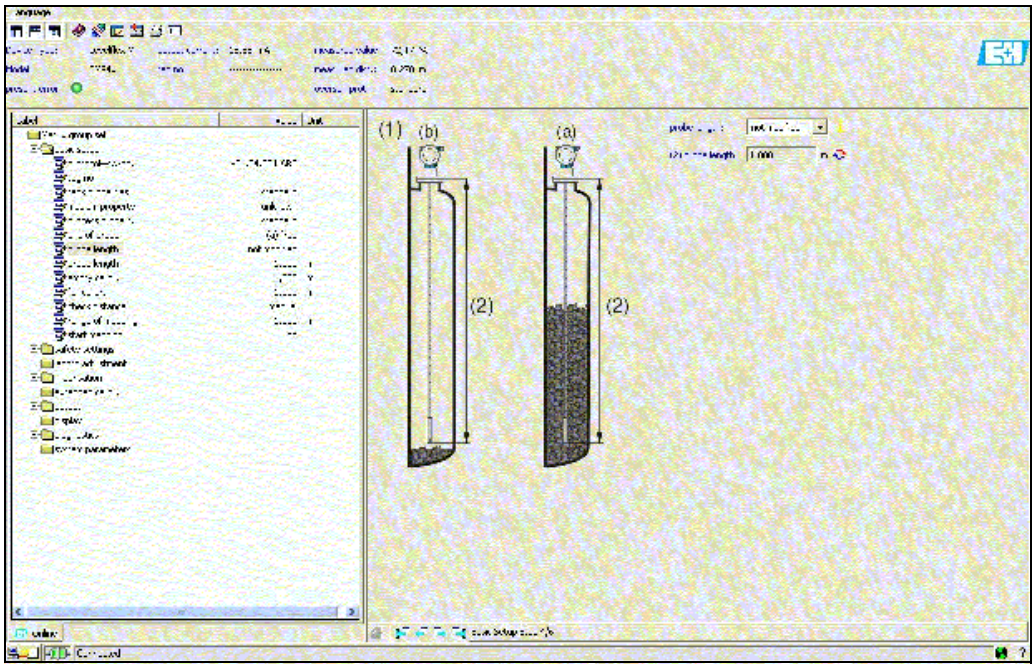

I00-fmp4xxxx-20-00-00-en-004

Basic setup step 5/6:

- Enter the application parameters (see chapter basic setup with "VU331"):
  - Empty calibration
  - Full calibration

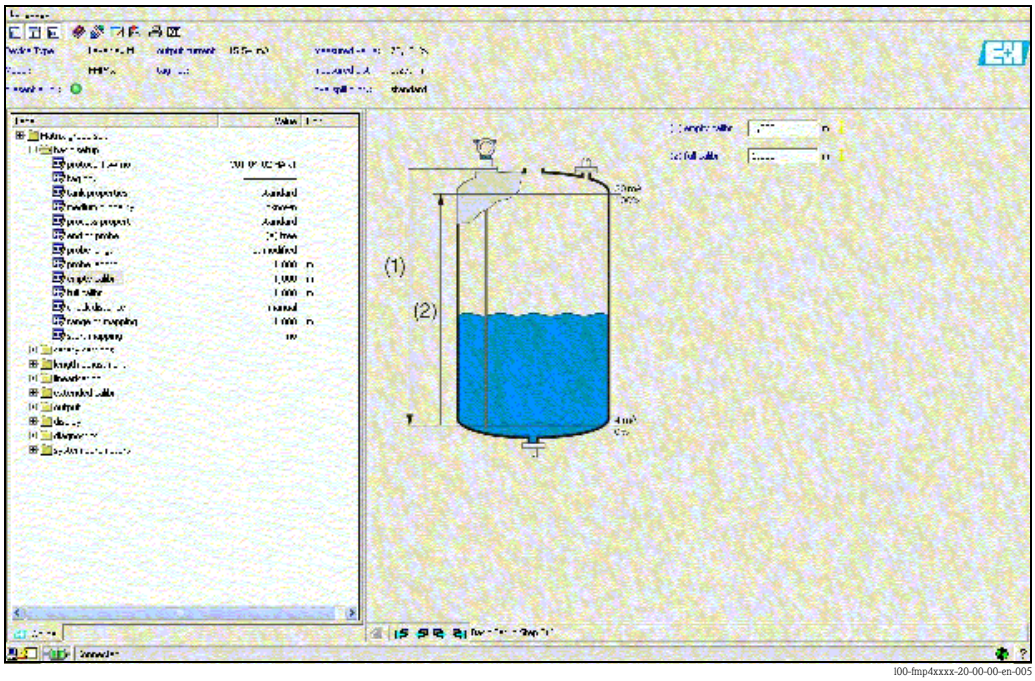

I00-fmp4xxxx-20-00-00-en-005

Basic setup step 6/6:
- Interference echo suppression takes place in this step
- The measured distance and the current measured value are always displayed in the header

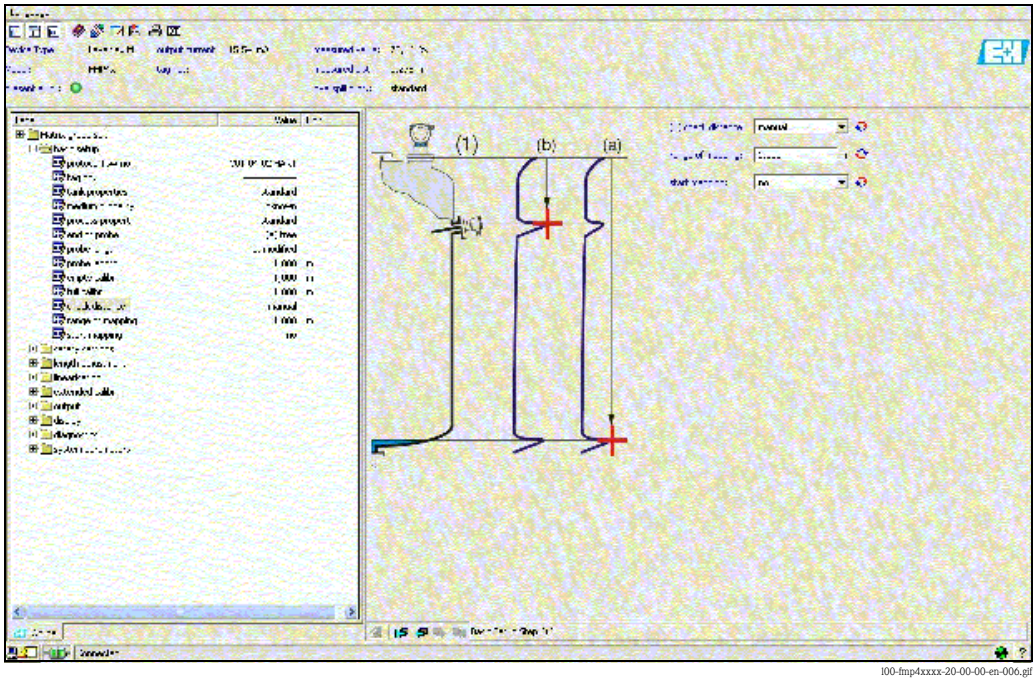

I00-fmp4xxxx-20-00-00-en-006.gif

6.8.1 Signal analysis via envelope curve

After the basic setup, it is recommended to evaluate the measurement with the aid of the envelope curve.

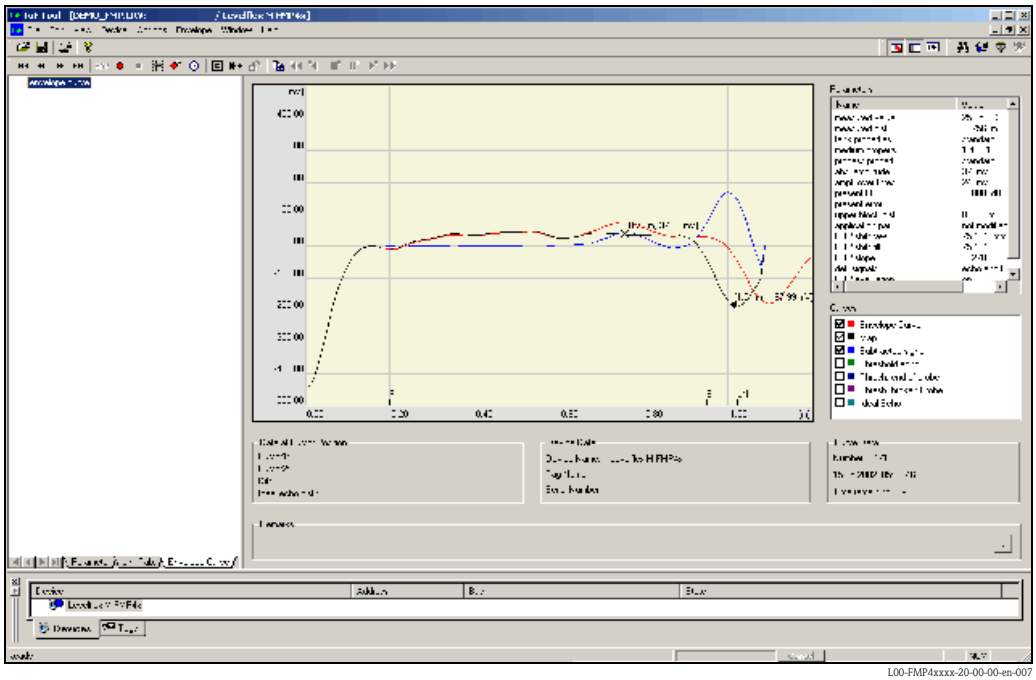
L00-FMP4xxxx-20-00-00-en-007

Note!
In the event of severe interference echoes, installing the Levelflex at another point can optimize the measurement routine.

Evaluating the measurement with the aid of the envelope curve

Typical curve shapes:

The following examples display typical curve shapes for a rope or rod probe in an empty tank. For all probe types, a negative probe end signal is shown. For rope probes, the end weight causes an additional preliminary positive echo (see rope probe diagram).

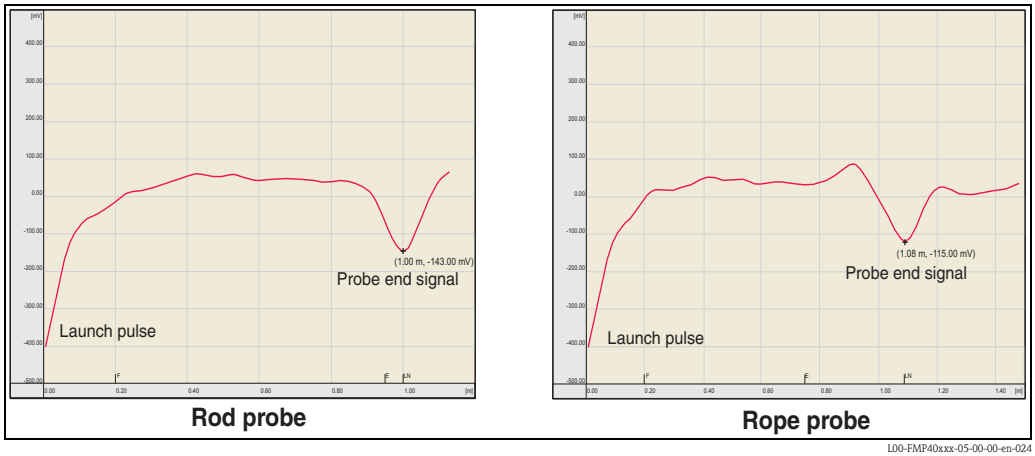

L00-FMP40xxx-05-00-00-en-024

Level echoes are indicated as positive signals in the envelope curve. Interference echoes can be both positive (e.g. reflections from internals) and negative (e.g. nozzles). The envelope curve, the map and the differential curve are used for the evaluation. Level echoes are searched for in the differential curve.

Evaluating the measurement:

- The map must correspond to the course of the envelope curve (for rod probes up to approx. 5 cm and for rope probes up to approx. 25 cm before the end of the probe) when the tank is empty.
- Amplitudes in the differential curve should be at a level of 0 mV when the tank is empty and lie within the span that is specified by the probe-specific blocking distances. In order to not detect any interference echoes, there must be no signals that exceed the echo threshold when the tank is empty.
- For partially-filled tanks, the map may only differ from the envelope curve at the position of the level echo. The level signal is then detected unequivocally as a positive signal in the differential curve. For detecting the level echo, the amplitude must lie above the echo threshold.

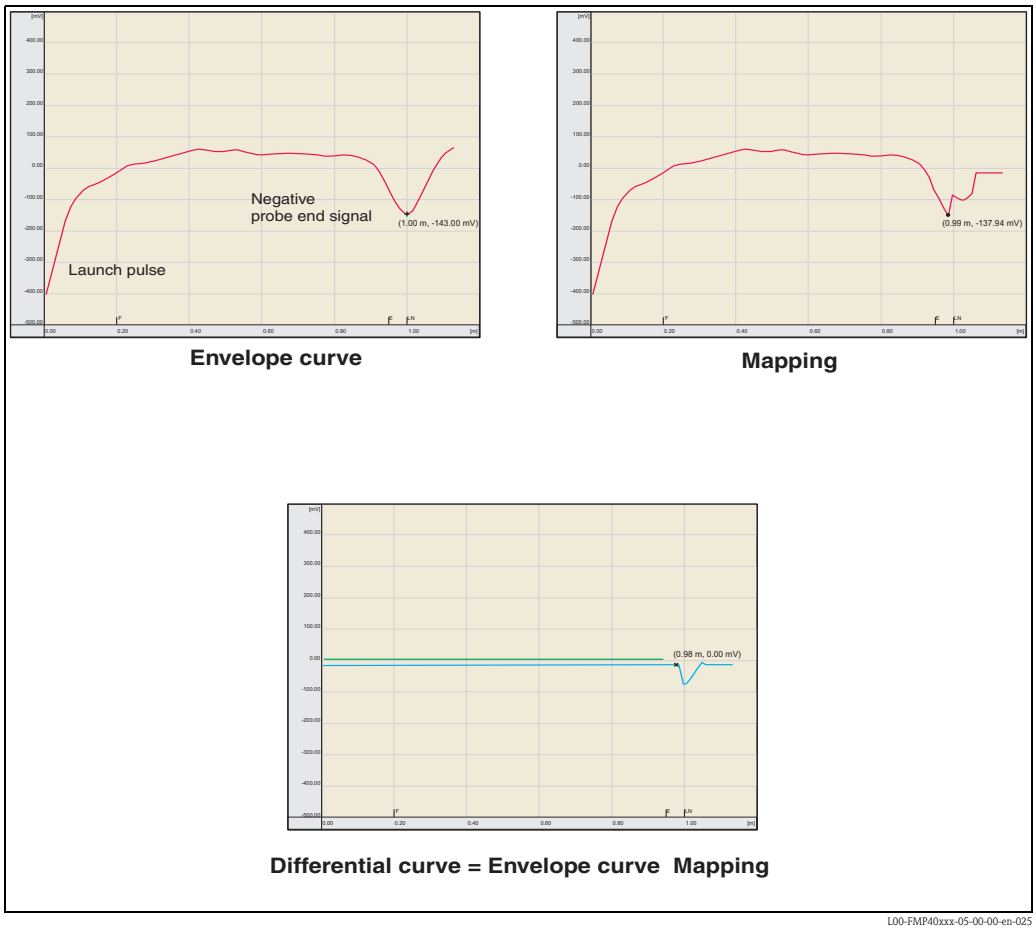

Envelope curve **Mapping**

Differential curve = Envelope curve Mapping

L00-FMP40xxx-05-00-00-en-025

6.8.2 User-specific applications (operation)

For details of setting the parameters of user-specific applications, see separate documentation BA00245F/00/EN "Description of Instrument Functions" on the enclosed CD-ROM.

7 Maintenance

The Levelflex M measuring device requires no special maintenance.

7.1 Exterior cleaning

When cleaning the Levelflex M, always use cleaning agents that do not attack the surface of the housing and the seals.

7.2 Repair

The Endress+Hauser repair concept assumes that the measuring devices have a modular design and that customers are able to undertake repairs themselves ("Spare Parts", → 72). Please contact Endress+Hauser Service for further information on service and spare parts.

7.3 Repairs to Ex-approved devices

When carrying out repairs to Ex-approved devices, please note the following:
- Repairs to Ex-approved devices may only be carried out by trained personnel or by Endress+Hauser Service.
- Comply with the prevailing standards, national Ex-area regulations, safety instructions (XA) and certificates.
- Only use genuine spare parts from Endress+Hauser.
- When ordering a spare part, please note the device designation on the nameplate. Only replace parts with identical parts.
- Carry out repairs according to the instructions. On completion of repairs, carry out the specified individual test on the device.
- Only Endress+Hauser Service may convert a certified device into a different certified version.
- Document all repair work and conversions.

7.4 Replacement

After a complete Levelflex M or electronic module has been replaced, the parameters can be downloaded into the device again via the communication interface. To do so, the data have to have been uploaded to the PC beforehand using the FieldCare.
Measurement can continue without having to carry out a new calibration.

- You may have to activate linearization (see BA00245F/00/EN on the enclosed CD-ROM.)
- New interference echo suppression (see Basic setup)

After a probe or the electronics have been replaced, a new calibration must be carried out. This is described in the repair instructions.

8 Accessories

8.1 Weather protection cover

A weather protection cover made of stainless steel is recommended for outdoor mounting (order No: 543199-0001). The shipment includes the protective cover and tension clamp.

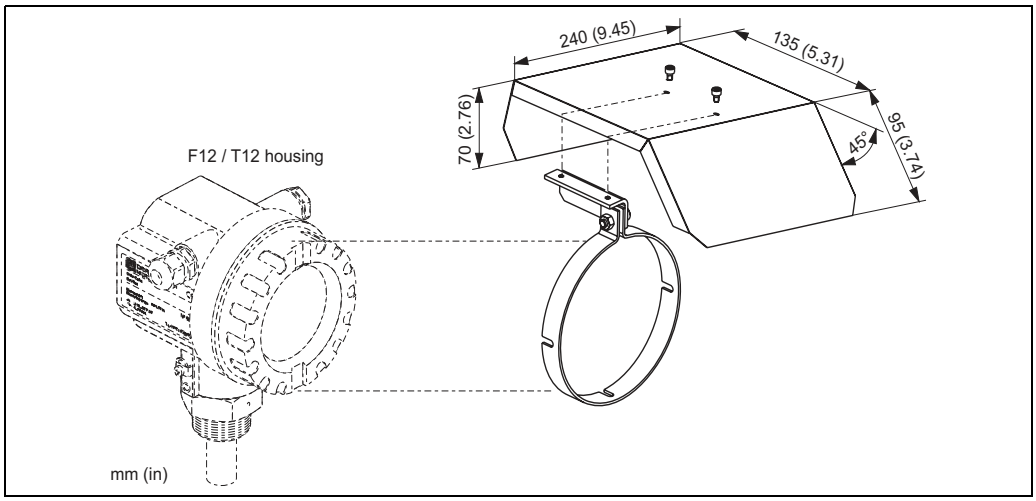

L00-FMR2xxxx-00-00-06-en-001

8.2 Weld-in adapter

Welding adapter with M24xof 1.5 – threads for the front-concise assembly of the sensor.
Material:
corrosion-resistant steel AISI 316L (1.4435)
Weight: 0.22 kg
For details refer to BA00361F/00/A6.

- Standard:
  Order No.: 71041381
- With 3.1 inspection certificate:
  Order No.: 71041383

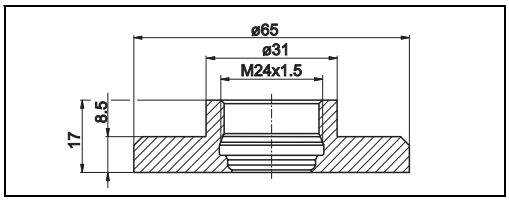

L00-FMP43xxx-06-00-00-xx-016

8.3 Remote display and operation FHX40

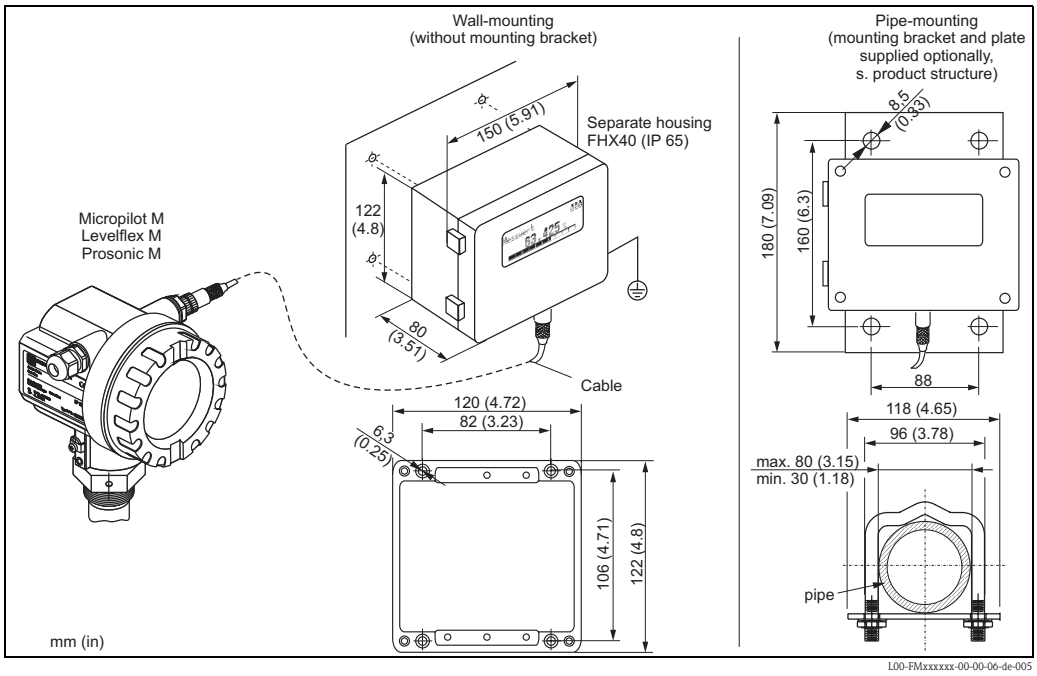

Technical data (cable and housing) and product structure:

Max. cable length	20 m (65 ft)
Temperature range	-30 °C to +70 °C (-22 °F to +158 °F)
Degree of protection	IP65/67(housing); IP68 (cable) acc. to IEC 60529
Materials	Housing: AlSi12; cable glands: nickle plated brass
Dimensions [mm (in)]	122x150x80 (4.8x5.9x3.2) / HxWxD

010	**Approval:**				
	A	Non-hazardous area			
	2	ATEX II 2G Ex ia IIC T6			
	3	ATEX II 2D Ex ia IIIC T80°C			
	G	IECEx Zone1 Ex ia IIC T6/T5			
	S	FM IS Cl. I Div.1 Gr. A-D, zone 0			
	U	CSA IS Cl. I Div.1 Gr. A-D, zone 0			
	N	CSA General Purpose			
	K	TIIS Ex ia IIC T6			
	C	NEPSI Ex ia IIC T6/T5			
	Y	Special version, TSP-No. to be spec.			
020		**Cable:**			
		1	20m / 65ft (> for HART)		
		5	20m / 65ft (> for PROFIBUS PA/FOUNDATION Fieldbus)		
		9	Special version, TSP-No. to be spec.		
030			**Additional option:**		
			A	Basic version	
			B	Mounting bracket, pipe 1"/ 2"	
			Y	Special version, TSP-No. to be spec.	
FHX40 -					Complete product designation

For connection of the remote display FHX40 use the cable which fits the communication version of the respective device.

8.4 Commubox FXA195 HART

For intrinsically safe HART communication with FieldCare via the USB port.
For details refer to TI00404F/00/EN.

8.5 Commubox FXA291

The Commubox FXA291 connects Endress+Hauser field devices with CDI interface (= Endress+Hauser Common Data Interface) to the USB interface of a personal computer or a notebook. For details refer to TI00405C/07/EN.

Note!
For the device you need the "ToF Adapter FXA291" as an additional accessory.

8.6 ToF Adapter FXA291

The ToF Adapter FXA291 connects the Commubox FXA291 via the USB interface of a personal computer or a notebook to the device. For details refer to KA00271F/00/A2.

8.7 Protective cover

With the protective cover the probe can be locked with dismantled electronics.
For details refer to BA00362F/00/A6.
Order No.: 71041379

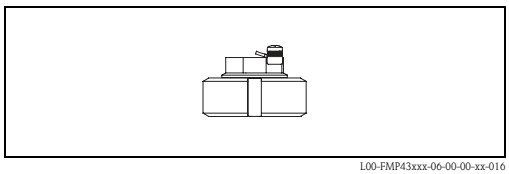

L00-FMP43xxx-06-00-00-xx-016

8.8 Calibration kit

The calibration kit is used to regularly test the accuracy and reproducibility of the Levelflex M FMP43 level measurement device. For details refer to BA00360F/00/EN.
Order No.: 71041382

9 Troubleshooting

9.1 Troubleshooting instructions

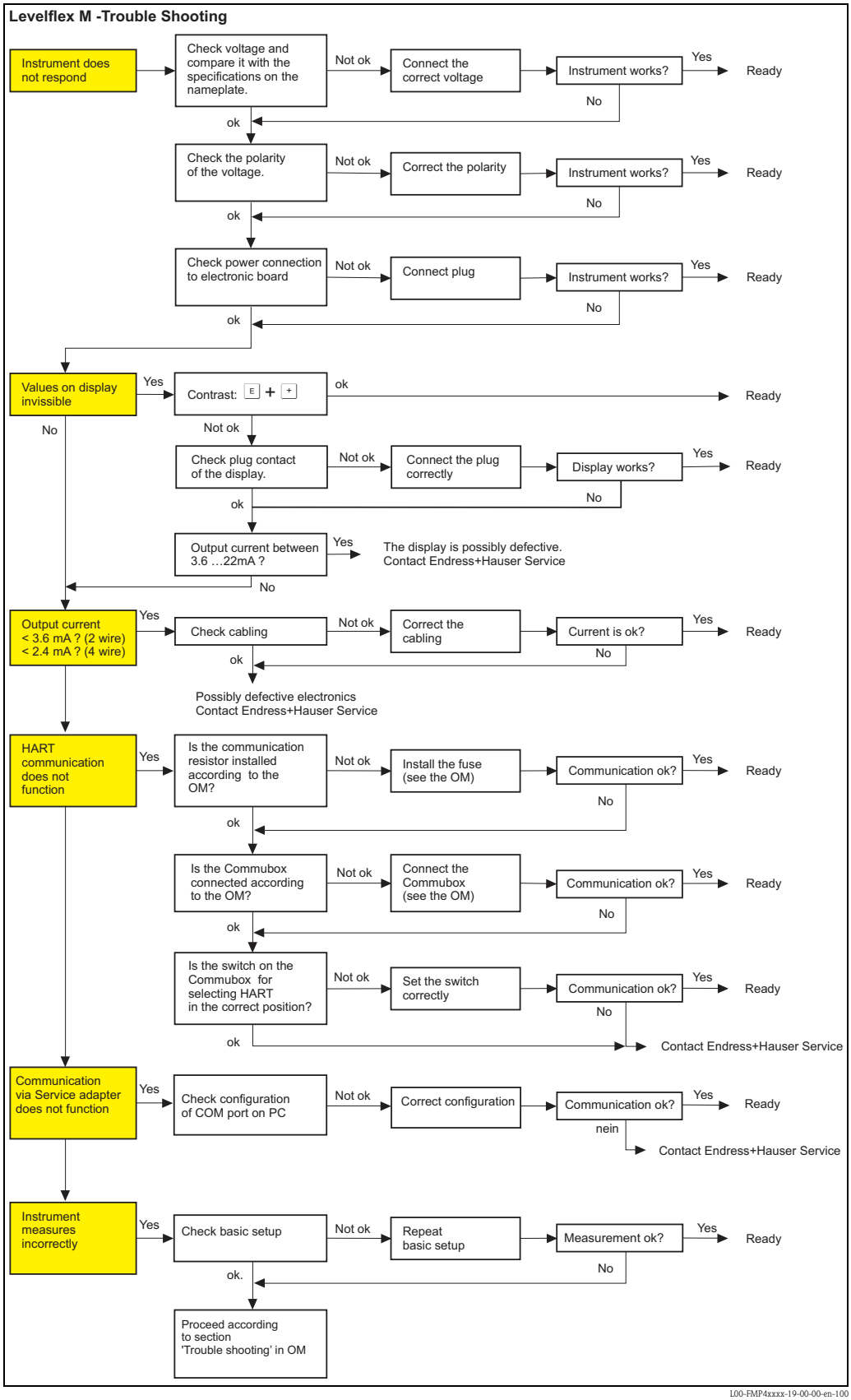

L00-FMP4xxxx-19-00-00-en-100

9.2 System error messages

Code	Description	Possible cause	Remedy
A102	checksum error total reset & new calibr. required.	device was switched off before data were stored; EMC problem; EEPROM defective	reset avoid EMC problems; if alarm prevails after reset, exchange electronics
W103	initializing – please wait	EEPROM storage not yet finished	wait a few seconds; if warning prevails, exchange electronics
A106	downloading – please wait	downloading data	wait, message disappears after downloading operation
A110	checksum error total reset & new calibr. required.	device was switched off before data were stored; EMC problem; EEPROM defective	reset avoid EMC problems; if alarm prevails after reset, exchange electronics
A111	electronics defective	RAM defective	reset if alarm prevails after reset, exchange electronics
A113	electronics defective	ROM defective	reset if alarm prevails after reset, exchange electronics
A114	electronics defective	EEPROM defective	reset if alarm prevails after reset, exchange electronics
A115	electronics defective	general hardware problem	reset if alarm prevails after reset, exchange electronics
A116	download error repeat download	checksum of stored data not correct	restart download of data
A121	electronics defective	no factory calibration available; EEPROM cleared	contact service
W153	initializing – please wait	initialization of electronics	wait a few seconds; if warning prevails, switch power off and on again
A160	checksum error total reset & new calibr. required.	device was switched off before data were stored; EMC problem; EEPROM defective	reset avoid EMC problems; if alarm prevails after reset, exchange electronics
A164	electronics defective	hardware problem	reset if alarm prevails after reset, exchange electronics
A171	electronics defective	hardware problem	reset if alarm prevails after reset, exchange electronics
A221	probe pulse deviates from normal values	HF module or cable between HF module and electronics defective	check contacts on HF module if fault cannot be eliminated: replace HF module
A241	Broken probe	rod probe broken, rope probe broken/torn or value entered for probe length is too long	check the probe length in 033, check the probe mechanically, if the probe is broken, change the probe or change to a non contact system
		probe break monitoring enabled without mapping beforehand	disable probe break monitoring, perform mapping and then reactivate probe break monitoring

Code	Description	Possible cause	Remedy
A251	feedthrough	lost contact in the process feedthrough	replace process feedthrough
A261	HF cable defective	HF cable defective or HF connector loose	check HF connector, replace cable if defective
W275	offset too high	temperature at the electronics too high or HF module defective	check temperature, replace HF module if defective
W512	recording of mapping - please wait	recording active	wait a few seconds until alarm disappears
W601	linearization ch1 curve not monotone	linearization not monotonously increasing	correct linearization table
W611	less than 2 linearization points for channel 1	number of entered linearization points < 2	correct linearization table
W621	simulation ch. 1 on	simulation mode is active	switch off simulation mode
E641	no usable echo channel 1 check calibr.	echo lost due to application conditions or buildup on probe	check basic setup; clean probe (see Operating Instructions, Troubleshooting)
W650	signal/noise ratio too low or no echo	noise amplitude too high	eliminate electromagnetic interference
E651	level in safety distance - risk of overfill	level in safety distance	alarm will disappear as soon as level leaves safety distance perform reset where necessary
A671	linearization ch1 not complete, not usable	linearization table is in edit mode	activate linearization table
W681	current ch1 out of range	current out of range (3.8 mA to 20.5 mA)	check basic setup and linearization

9.3 Application errors

Error	Output	Possible cause		Remedy
A warning or alarm has occurred	Depending on the configuration	See table of error messages (→ 68)		1. See table of error messages (→ 68)
Measured value (00) is incorrect	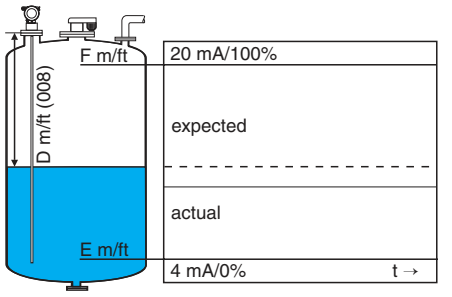 L00-FMP4xxxx-19-00-00-en-019	Measured distance (008) OK?	yes →	1. Check empty calibr. (005) and full calibr. (006) 2. Check linearization: → Level/ullage (040) → Max. scale (046) →Diameter vessel (047) → Check table
		no ↓		
		An interference echo may have been evaluated.	yes →	1. Carry out tank mapping → Basic setup
No change of measured value on filling/emptying	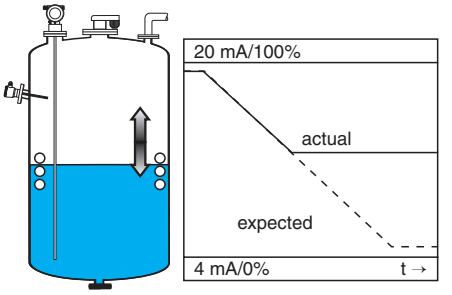 L00-FMR2xxxx-19-00-00-en-014	Interference echo from tank internals, nozzle or buildup on the probe		1. Carry out tank mapping → Basic setup 2. If necessary, clean probe 3. If necessary, select better mounting position
E641 (loss of echo) after switching on the power supply	**If the device is configured to HOLD in the event of echo loss the output is set to any value/ current.**	Noise level during the initialization phase too high.		Repeat empty calibr. (005) once more. Caution! Before confirmation change with + or − to the edit mode.

Error	Output	Possible cause	Remedy
Device displays a level when the tank is empty	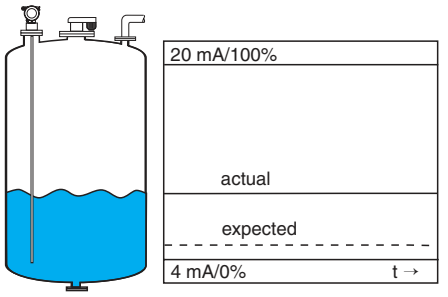	Incorrect probe length	1. Carry out automatic probe length detection when the tank is empty. 2. Carry out mapping over entire probe when the tank is empty (probe free!).
Measured value incorrect (slope error in the entire measuring range)	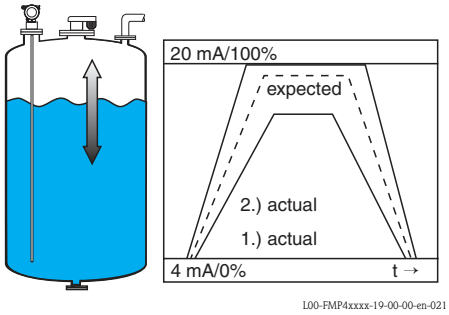	Tank properties incorrect. Medium properties incorrect.	LN < 4 m and "Aluminum tank" tank properties selected → Calibration not possible. → Selection → Select standard → Thresholds too high Select lower medium properties.

9.4 Spare Parts

An overview of the spare parts for your device is available in the internet at www.endress.com. To obtain information on the spare parts, proceed as follows:

1. Go to "www.endress.com" and select your country.
2. Click "Instruments".

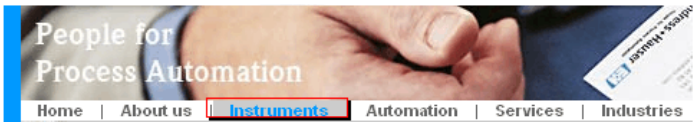

3. Enter the product name into the "product name" field.

Endress+Hauser product search

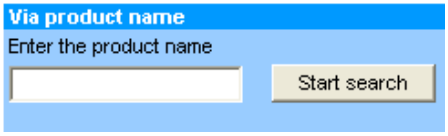

4. Select the device.
5. Click the "Accessories/Spare parts" tab.

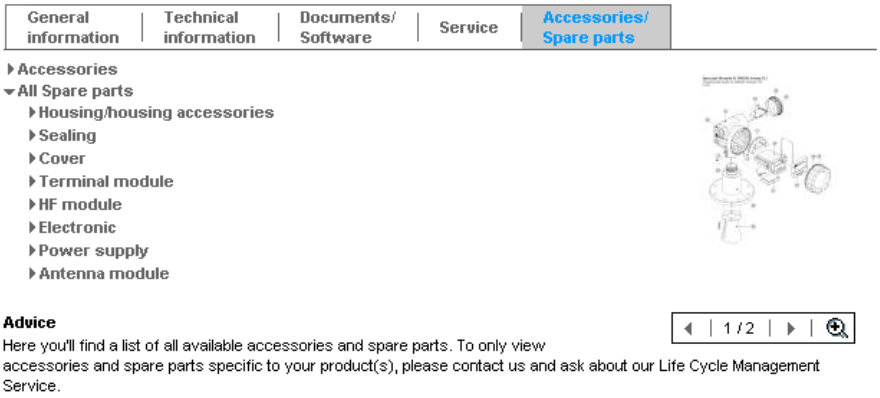

6. Select the required spare parts (You may also use the overview drawing on the right side of the screen.)

When ordering spare parts, always quote the serial number indicated on the nameplate. As far as necessary, the spare parts also include replacement instructions.

9.5 Return

The following procedures must be carried out before a level transmitter requiring repair or calibration, for example, is returned to Endress+Hauser:
- Remove all residues. Pay special attention to the grooves for seals and crevices which could contain fluid residues. This is particularly important if the substance is hazardous to health, e.g. flammable, toxic, caustic, carcinogenic, etc.
- Always enclose a duly completed "Declaration of contamination" form with the device (a copy of the "Declaration of contamination" can be found at the end of these Operating Instructions). Only then can Endress +Hauser transport, examine and repair a returned device.
- Enclose special handling instructions if necessary, for example a safety data sheet as per EN 91/155/EEC.

Additionally specify:
- The chemical and physical characteristics of the fluid
- A description of the application
- A description of the error that occurred (specify error code if possible)
- Operating time of the device

9.6 Disposal

When disposing, separate and recycle the device components based on the materials.

9.7 Software history

Date	Software version	Software modifications	Documentation	Description of Instrument Functions
07.2007	01.04.02	Original software.	BA357F/00/en/07.07 71040912 BA357F/00/en/03.09 71074935 BA00357F/00/EN/13.10 71120304	BA245F/00/en/07.07 71040940

9.8 Contact addresses of Endress+Hauser

Contact addresses can be found on our homepage: www.endress.com/worldwide. If you have any questions, please do not hesitate to contact your Endress+Hauser representative.

10 Technical data

10.1 Additional technical data

10.1.1 Input

Measured variable	The measured variable is the distance between the reference point (see Fig, → 11) and the product surface. The level is calculated subject to the empty distance entered "E" (see Fig., → 41). Alternatively, the level can be converted by means of linearization (32 points) to other variables (volume, mass).

10.1.2 Output

Output signal	4 to 20 mA (invertible) with HART protocol
Signal on alarm	Error information can be accessed via the following interfaces: ■ Local display: – Error symbol (→ 33) – Plain text display ■ Current output, failsafe mode can be selected (e.g. according to NAMUR recommendation NE43) ■ Digital interface
Linearization	The linearization function of the Levelflex M allows the conversion of the measured value to any unit of length or volume and mass or %. Linearization tables for calculating the volume in cylindrical tanks are preprogrammed. Other tables of up to 32 value pairs can be entered manually or semi-automatically. The creation of a linearization table with FieldCare is particularly convenient.

10.1.3 Performance characteristics

Reference operating conditions

- Temperature = +20 °C ± 5 °C
- Pressure = 1013 mbar abs. ±20 mbar
- Relative humidity (air) = 65 % ±20 %
- Metallic tank, no internals, distance to tank wall > 500 mm
- Medium: water (DC > 7), respectively oil (DC = 2)
- Probe length > 500 mm

Maximum measured error

Is in Function group "basic setup" (00) starting from → 📄 43.

Resolution

- Digital: 1 mm
- Analog: 0.03 % of measuring range

Reaction time

The reaction time depends on the configuration.

Shortest time:
- 2-wire electronics: 1 s
- 4-wire electronics: 0.7 s

Influence of ambient temperature

The measurements are carried out in accordance with EN 61298-3:
- Digital output:
  - average T_K: 0.6 mm/10 K, max. ±3.5 mm over the entire temperature range -40 °C to +80 °C

2-wire:
- Current output (additional error, in reference to the span of 16 mA):
  - **Zero point (4 mA)**
    average T_K: 0.032 %/10 K, max. 0.35 % over the entire temperature range -40 °C to +80 °C
  - **Span (20 mA)**
    average T_K: 0.05 %/10 K, max. 0.5 % over the entire temperature range -40 °C to +80 °C

4-wire:
- Current output (additional error, in reference to the span of 16 mA):
  - **Zero point (4 mA)**
    average T_K: 0.02 %/10 K, max. 0.29 % over the entire temperature range -40 °C to +80 °C
  - **Span (20 mA)**
    average T_K: 0.06 %/10 K, max. 0.89 % over the entire temperature range -40 °C to +80 °C

10.1.4 Operating conditions: Environment

Ambient temperature range

Ambient temperature for electronics: -40 °C to +80 °C. The functionality of the LCD display may be limited for temperatures T_a < -20 °C and T_a > +60 °C. A weather protection cover should be used for outdoor operation if the device is exposed to direct sunlight.

Ambient temperature limits

If the temperature (T_2) at the process connection is above 80 °C, the permitted ambient temperature (T_1) decreases as per the following diagram (temperature derating):

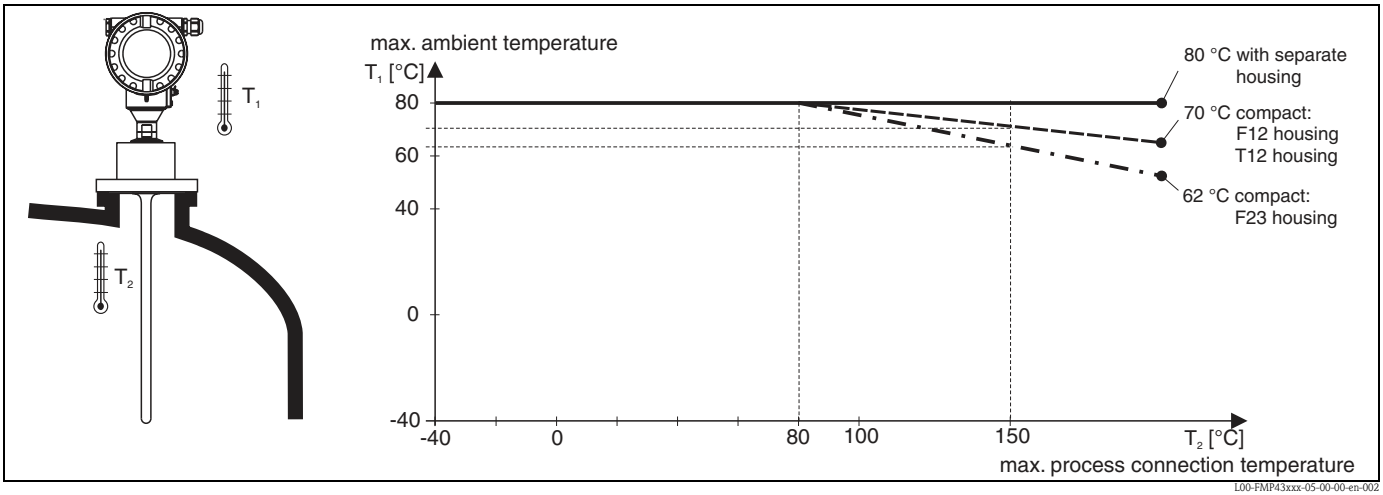

Storage temperature

-20 °C to +80 °C

Climate class

DIN EN 60068-2-38 (test Z/AD)

Degree of protection

- With closed housing tested according to
  - All housing
    - IP68, NEMA6P (24 h at 1.83 m under water)
    - IP66, NEMA4X
  - Housing F23: IP69K in combination with cable entries M20, G½ and NPT½
- With open housing: IP20, NEMA1 (also ingress protection of the display)

Vibration resistance

DIN EN 60068-2-64 / IEC 68-2-64: 20 to 2000 Hz, 1 $(m/s^2)^2/Hz$

Cleaning the probe

Depending on the application, contamination or build-up can accumulate on the probe. A thin, even layer only influences measurement slightly. Thick layers can dampen the signal and then reduce the measuring range. Severe, uneven build-up, adhesion e.g. through crystallization, can lead to incorrect measurement. In this case, we recommend that you use a non-contact measuring principle, or check the probe regularly for soiling.

Electromagnetic compatibility (EMC)

Electromagnetic compatibility to EN 61326 and NAMUR Recommendation EMC (NE21). Details are provided in the Declaration of Conformity. A standard installation cable is sufficient if only the analog signal is used. Use a shielded cable when working with a superimposed communications signal (HART).

When installing the probes in metal and concrete tanks and when using a coax probe:
- Interference emission to EN 61326 – x series, electrical equipment Class B.
- Interference immunity to EN 61326 – x series, requirements for industrial areas and NAMUR Recommendation NE21 (EMC)

The measured value can be affected by strong electromagnetic fields when installing rod and rope probes without a shielding/metallic wall, e.g. plastic, and in wooden silos.
- Interference emission to EN 61326 – x series, electrical equipment Class A.
- Interference Immunity: the measured value can be affected by strong electromagnetic fields.

10.1.5 Operating conditions: Process

Process temperature range

The maximum permitted temperature at the process connection (see figure measuring point) is determined by the O-ring material ordered:

O-ring material	Min. temperature	Max. temperature	
FFKM (Kalrez)	-20 °C	+150 °C	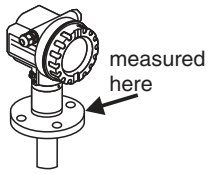
EPDM	-20 °C	+130 °C	

Process pressure limits

Pmax = 16 bar.
This range may be reduced by the selection of process connection. The pressure rating (PN) specified on the flanges refers to a reference temperature of 20 °C, for ASME flanges 100 °F. Observe pressure-temperature dependency.

Please refer to the following standards for the pressure values permitted for higher temperatures:
- EN 1092-1: 2001 Tab.18
  With regard to their temperature stability properties, the materials 1.4404 and 1.4435 are grouped under 13E0 in EN 1092-1 Tab.18. The chemical composition of the two materials can be identical.
- ASME B 16.5a - 1998 Tab. 2-2.2 F316
- ASME B 16.5a - 1998 Tab. 2.3.8 N10276
- JIS B 2220

Dielectric constant

$\varepsilon r \geq 1.6$

10.1.6 Mechanical construction

Material

See TI00424F/00/EN, chapter "Material (not in contact with process)" and "Material (in contact with process)".

Tolerance of probe length

Tolerance	Rod length
+ 0 / - 3 mm	< 1000 mm
+ 0 / - 5 mm	1000 to < 4000 mm

Weight

Part	Weight	Part	Weight
T12 housing	approx. 2.7 kg	Compact probe, removable	approx. 0.8 kg
F12 housing	approx. 1.8 kg	Separate probe	approx. 2.1 kg
F23 housing	approx. 5 kg	Probe rod	approx. 0.4 kg/m
Compact probe	approx. 0.7 kg		

Process connection

See "Ordering structure", → 🖹 6.

Probe

See "Ordering structure", → 🖹 6.

Note!
The modular structure of the probe makes a simple possible exchanges of the process seals, the probe rod and the process coupling ring.

10.1.7 Certificates and approvals

CE mark

The measuring system meets the legal requirements of the applicable EC guidelines. These are listed in the corresponding EC Declaration of Conformity together with the standards applied. Endress+Hauser confirms successful testing of the device by affixing to it the CE mark.

Certificates

The devices are certified for use in hazardous areas. The safety instructions to be observed are enclosed and referenced on the nameplate:
- Europe: EC type-examination certificate, safety instructions XA
- USA: FM Approval, Control Drawing
- Canada: CSA Certificate of Compliance, Control Drawing
- China: NEPSI Explosion Protection Certificate of Conformity, Safety Instructions XA
- Japan: TIIS Certificate for Ex-apparatus

Correlation of the certificates (XA, ZD) to the device:

Feature		Variant	ZD021F	ZD110F	ZD109F	ZD107F	ZD106F	ZD078F	ZD077F	ZD076F	ZD075F	ZD117F	ZD116F	ZD114F	ZD113F	ZD083F	ZD082F	ZD081F	ZD080F	XA379F	XA378F	XA416F	XA415F	XA414F	XA413F	XA412F	XA411F	XA410F
10 Approval:	Non-hazardous area	A																										
	*NEPSI Ex ia IIC T6	I																		X	X							
	*TIIS Ex ia IIC T4	K																										
	FM DIP Cl.II Div.1 Gr. E-G, N.I.	M						X																				
	CSA General Purpose	N																										
	CSA DIP Cl.II Div.1 Gr. G + coal dust	P														X												
	FM IS Cl.I,II,III Div.1 Gr. A-G, N.I., zone 0, 1, 2	S	X	X	X	X	X		X	X																		
	FM XP Cl.I,II,III Div.1 Gr. A-G, zone 1, 2	T						X																				
	CSA IS Cl.I,II,III Div.1 Gr. A-D, G + coal dust, N.I., zone 0, 1, 2	U										X	X	X	X			X	X									
	CSA XP Cl.I,II,III Div.1 Gr. A-D, G + coal dust, N.I., zone 1, 2	V															X											
	ATEX II 1/2G Ex ia IIC T6	1																									X	X
	ATEX II 1/2D, Alu blind cover [1]	2																				X	X	X				
	ATEX II 2G Ex e mb (ia) IIC T6	3																							X			
	ATEX II 1/3D [1]	4																				X	X	X				
	ATEX II 1/2G Ex ia IIC T6,ATEX II 1/3D	5																					X					
	ATEX II 1/2G Ex d (ia) IIC T6	7																								X		
50 Power supply Output:	2-wire 4-20mA SIL HART	B			X		X		X		X		X		X		X		X		X	X	X		X	X		X
	2-wire PROFIBUS PA	D	X	X		X			X	X		X		X			X	X		X		X	X		X	X	X	
	2-wire FOUNDATION Fieldbus	F	X	X		X			X	X		X		X			X	X		X		X	X		X	X	X	
	4-wire 90-250VAC 4-20mA SIL HART	G						X								X									X			
	4-wire 10.5-32VDC 4-20mA SIL HART	H						X								X									X			
80 Housing:	F12 Alu, coated IP68 NEMA6P	A	X					X		X	X					X		X	X				X	X			X	X
	F23 316L IP68 NEMA6P	B	X			X	X							X	X								X				X	X
	T12 Alu, coated IP68 NEMA6P	C						X									X					X			X	X		
	T12 Alu, coated IP68 NEMA6P + OVP	D	X	X	X						X	X	X										X				X	X

1) Housing F12/F23/T12-OVP: In combination with electronics B, D or F supply intrinsically safe.
** in preparation*

Sanitary compatibility	Overview of permitted process connections from, → 12.





Note!
The gap-free connections can be cleaned without residue using the usual cleaning methods.

Many versions of Levelflex M meet the requirements of the 3A-Sanitary Standard No. 74. Endress+Hauser confirms this compliance by affixing the 3A symbol.

Pharma (CoC)	*Certificate of Compliance (CoC)* ■ See "Ordering structure", → 6, feature 100 "Additional Option:", option"P". ■ Materials in Contact with process made of 316L with Δ ferrite < 3% ■ Surface roughness Ra < 0,38 µm/15 µin ■ Information on ASME BPE Conformity
Overfill protection	SIL 2, for 4 to 20 mA output signal (see SD00174F/00/EN "Functional Safety Manual").
Telecommunications	Complies with "Part 15" of the FCC rules for an "Unintentional Radiator". All probes meet the requirements for a "Class A Digital Device". In addition to this, all probes in metallic tanks meet the requirements for a "Class B Digital Device".
External standards and guidelines	The European directives and standards applied can be taken from the associated EC Declarations of Conformity. In addition, the following also applied for Levelflex M: EN 60529 Protection class of housing (IP-code) NAMUR - international user association of automation technology in process industries ■ NE21 Electromagnetic compatibility (EMC) of industrial process and laboratory control equipment. ■ NE43 Standardization of the signal level for the failure information of digital transmitters.

10.1.8 Additional documentation

Additional documentation

This additional documentation can be found on our product pages on www.endress.com.
- Technical Information (TI00424F/00/EN)
- Safety Manual "Functional safety manual" (SD00174F/00/EN)
- Operating Instruction "Description of Instrument Functions" (BA00245F/00/EN)

11 Appendix

11.1 HART operating menu (display module)

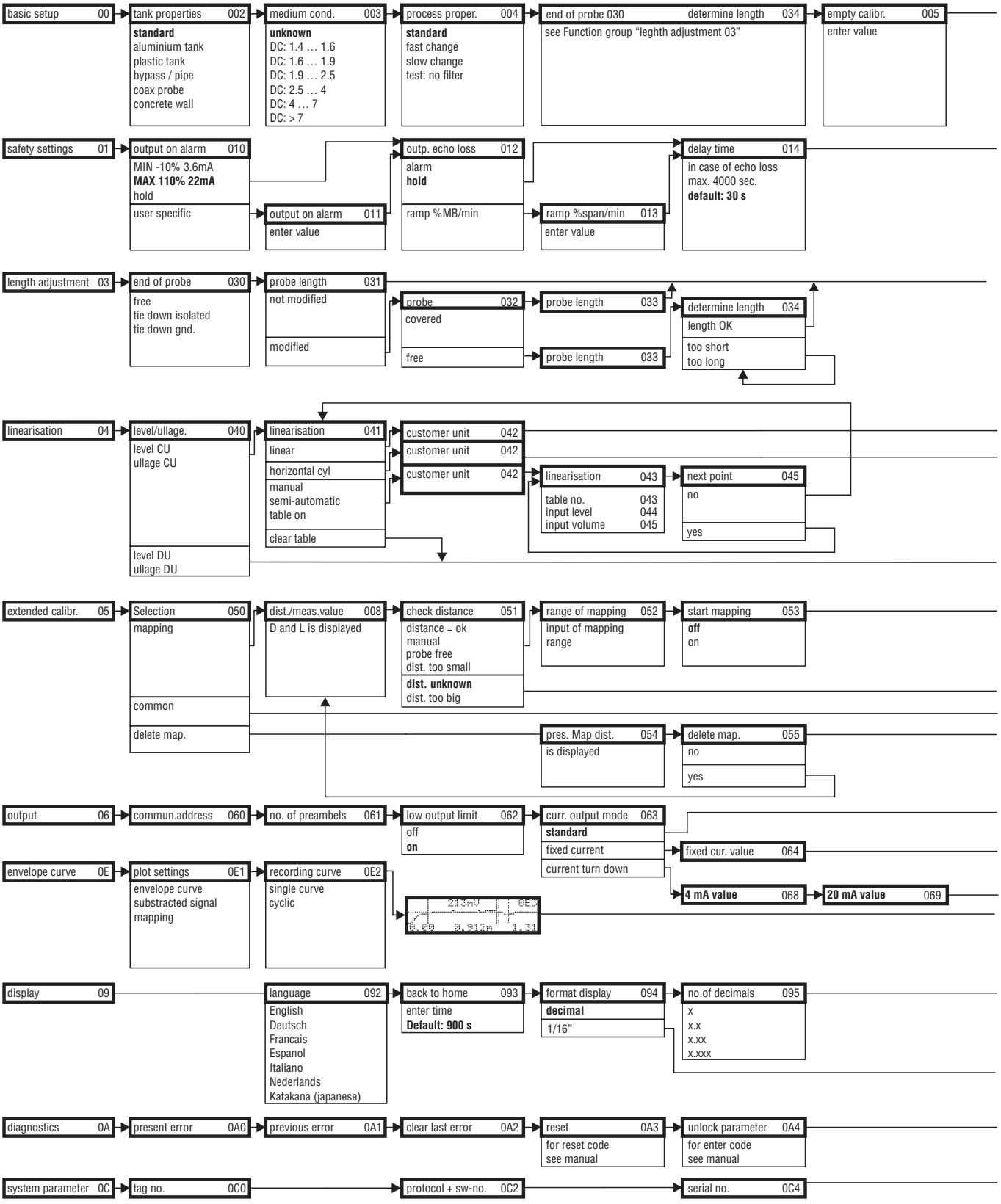

Note! The default values of the parameters are typed in boldface.

L00-FMP4xxxx-19-00-01-en-002

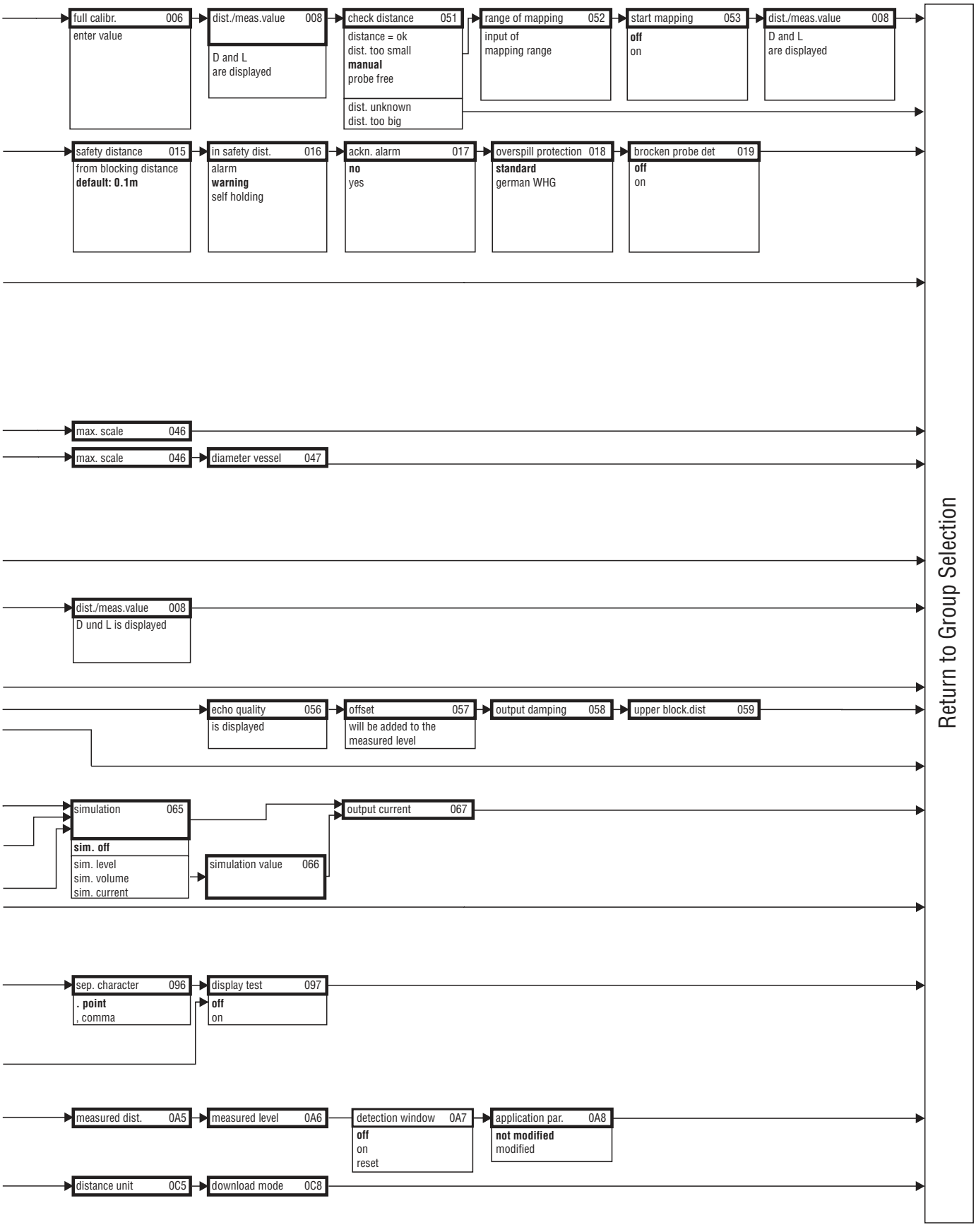

L00-FMP4xxxx-19-00-02-en-002

11.2 Patents

This product is protected by at least one of the following patents.
Further patents are pending.

- US 5,661,251 ≙ EP 0 780 664
- US 5,827,985 ≙ EP 0 780 664
- US 5,884,231 ≙ EP 0 780 665
- US 5,973,637 ≙ EP 0 928 974

Index

A
Alarm 37
Application errors 70

B
Basic Setup 41, 43
Blocking distance 51

C
CE mark 8
Commissioning 40
Commubox 66
Connection 28

D
Declaration of conformity 8
Designated use 4
Determine length 46, 59
Dimensions 10
Display 32

E
Empty calibration 47, 59
End of probe 58
Envelope curve 53
Error messages 37, 68
Ex approval 79
Exterior cleaning 63

F
F12 housing 24
F23 housing 24
FHX40 65
Field Communicator 375, 475 28
FieldCare 28, 57
Full calibration 47

H
HART 26, 28, 38

I
Installation 9
Installation instructions 15
Interference echo mapping 60

K
Key assignment 33

L
Lock 34

M
Maintenance 63
Medium properties 44, 58
Menu structure 82

N
Nameplate 6
Notes on safety conventions and icons 5

O
Operating menu 31
Operation 30, 34
Operational safety 4
Ordering structure 6

P
Potential equalization 29
Probe 59
Probe length 59
Process propert 58
Process properties 45

R
Repairs 63
Repairs to Ex-approved devices 63
Replacement 63
Reset 36
Return 73
RMA422 28
RN221N 28

S
Service Interface FXA291 66
Software history 73
Spare Parts 72
System error messages 68

T
T12 housing 25
Tank properties 58
Technical data 74
Terminal compartment 26
Troubleshooting 67
Troubleshooting instructions 67
Turn housing 20

U
Unlock parameter 35

V
VU331 53

W
Warning 37
Weather protection cover 64
Wiring 24

Endress+Hauser

People for Process Automation

Declaration of Hazardous Material and De-Contamination

Erklärung zur Kontamination und Reinigung

RA No. ☐☐☐☐☐☐☐☐

Please reference the Return Authorization Number (RA#), obtained from Endress+Hauser, on all paperwork and mark the RA# clearly on the outside of the box. If this procedure is not followed, it may result in the refusal of the package at our facility.

Bitte geben Sie die von E+H mitgeteilte Rücklieferungsnummer (RA#) auf allen Lieferpapieren an und vermerken Sie diese auch außen auf der Verpackung. Nichtbeachtung dieser Anweisung führt zur Ablehnung ihrer Lieferung.

Because of legal regulations and for the safety of our employees and operating equipment, we need the "Declaration of Hazardous Material and De-Contamination", with your signature, before your order can be handled. Please make absolutely sure to attach it to the outside of the packaging.

Aufgrund der gesetzlichen Vorschriften und zum Schutz unserer Mitarbeiter und Betriebseinrichtungen, benötigen wir die unterschriebene "Erklärung zur Kontamination und Reinigung", bevor Ihr Auftrag bearbeitet werden kann. Bringen Sie diese unbedingt außen an der Verpackung an.

Type of instrument / sensor
Geräte-/Sensortyp _____

Serial number
Seriennummer _____

☐ **Used as SIL device in a Safety Instrumented System /** *Einsatz als SIL Gerät in Schutzeinrichtungen*

Process data/ *Prozessdaten*

Temperature / *Temperatur* _____ [°F] _____ [°C]
Pressure / *Druck* _____ [psi] _____ [Pa]
Conductivity / *Leitfähigkeit* _____ [µS/cm]
Viscosity / *Viskosität* _____ [cp] _____ [mm^2/s]

Medium and warnings
Warnhinweise zum Medium

	Medium /concentration *Medium /Konzentration*	Identification CAS No.	 flammable *entzündlich*	 toxic *giftig*	 corrosive *ätzend*	 harmful/ irritant *gesundheits-schädlich/ reizend*	 other * *sonstiges**	 harmless *unbedenklich*
Process medium / *Medium im Prozess*								
Medium for process cleaning / *Medium zur Prozessreinigung*								
Returned part cleaned with / *Medium zur Endreinigung*								

* explosive; oxidising; dangerous for the environment; biological risk; radioactive
* *explosiv; brandfördernd; umweltgefährlich; biogefährlich; radioaktiv*

Please tick should one of the above be applicable, include safety data sheet and, if necessary, special handling instructions.
Zutreffendes ankreuzen; trifft einer der Warnhinweise zu, Sicherheitsdatenblatt und ggf. spezielle Handhabungsvorschriften beilegen.

Description of failure / *Fehlerbeschreibung* _____

_____

_____

Company data / *Angaben zum Absender*

Company / *Firma* _____

_____

Address / *Adresse*

_____

_____

Phone number of contact person / *Telefon-Nr. Ansprechpartner:*

_____

Fax / E-Mail _____

Your order No. / *Ihre Auftragsnr.* _____

"We hereby certify that this declaration is filled out truthfully and completely to the best of our knowledge.We further certify that the returned parts have been carefully cleaned. To the best of our knowledge they are free of any residues in dangerous quantities."

"Wir bestätigen, die vorliegende Erklärung nach unserem besten Wissen wahrheitsgetreu und vollständig ausgefüllt zu haben. Wir bestätigen weiter, dass die zurückgesandten Teile sorgfältig gereinigt wurden und nach unserem besten Wissen frei von Rückständen in gefahrbringender Menge sind."

_____ (place, date / *Ort, Datum*)

_____ Name, dept./ *Abt.* (please print / *bitte Druckschrift*)

_____ Signature / *Unterschrift*

www.endress.com/worldwide

Endress+Hauser

People for Process Automation

BA00357F/00/EN/13.10
71120304
CCS/FM+SGML 6.0/ProMoDo

71120304