Level | Pressure | Flow | Temperature | Liquid Analysis | Registration | Systems Components | Services | Solutions

Brief Operating Instructions

Micropilot M FMR250

Level-Radar

PROFIBUS®

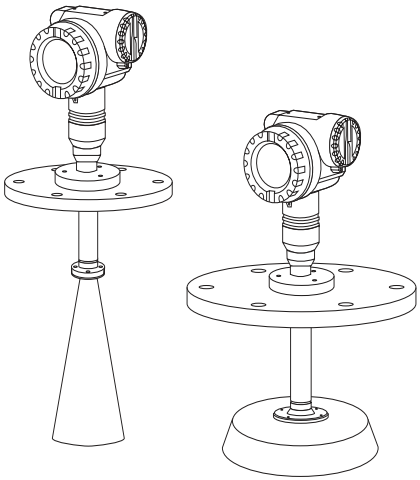

These are Brief Operating Instructions.
For more detailed information, please refer to the Operating Instructions and the additional documentation on the CD-ROM provided.
These Brief Operating Instructions are not intended to replace the Operating Instructions provided in the scope of supply.

The complete device documentation consists of:
- These Brief Operating Instructions
- A CD-ROM with:
  - The Operating Instructions
  - Approvals and safety certificates
  - Additional device-specific information

KA1016F/00/EN/12.09
71030619

Endress+Hauser

People for Process Automation

Table of Contents

1 Safety instructions 3
1.1 Designated use 3
1.2 Installation, commissioning and operation 3
1.3 Operational safety and process safety 3
1.4 Return 4
1.5 Safety icons 4

2 Mounting 5
2.1 Quick installation guide 5
2.2 Incoming acceptance, transport, storage 5
2.3 Installation 6
2.4 Post-installation check 13

3 Wiring 14
3.1 Wiring in F12/F23 housing 14
3.2 Wiring in T12 housing 15
3.3 Terminal assignment 15
3.4 Cable specification PROFIBUS 16
3.5 Connecting the measuring unit 16
3.6 Screening/potential matching 17
3.7 Degree of protection 17
3.8 Post-connection check 17

4 Operation 18
4.1 General structure of the operating menu 18
4.2 Display and operating elements 19
4.3 Device address 22

5 Commissioning 23
5.1 Function check 23
5.2 Switching on the measuring device 23
5.3 Overview Basic Setup 24
5.4 Basic Setup with the device display 26
5.5 Envelope curve with the instrument display 35

1 Safety instructions

1.1 Designated use

The Micropilot M is a compact radar level transmitter for the continuous, contactless measurement of liquids, pastes and sludge. The device can also be freely mounted outside closed metal vessels because of its operating frequency of about 26 GHz and a maximum radiated pulsed energy of 1 mW (average power output 1µW). Operation is completely harmless to humans and animals.

1.2 Installation, commissioning and operation

- The instrument must only be installed, connected, commissioned and maintained by qualified and authorized specialists (e.g. electrical technicians) in full compliance with the instructions in this manual, the applicable norms, legal regulations and certificates (depending on the application).
- The specialist must have read and understood this manual and must follow the instructions it contains. If you are unclear on anything in these Brief Operating Instructions, you must read the Operating Instructions (on the CD-ROM). The Operating Instructions provide detailed information on the instrument/measuring system.
- The instrument may only be modified or repaired if such work is expressly permitted in the Operating Instructions (see CD-ROM).
- If faults cannot be rectified, the instrument must be taken out of service and secured against unintentional commissioning.
- Do not operate damaged instruments. Mark them as defective.

1.3 Operational safety and process safety

- Alternative monitoring measures must be taken to ensure operational safety and process safety during confiugration, testing and maintenance work on the instrument.
- The instrument is safely built and tested according to state-of-the-art technology and has left the factory in perfect condition as regards technical safety. The applicable regulations and European standards have been taken into account.
- Pay particular attention to the technical data on the nameplate.
- If the instrument is to be installed in an explosion hazardous area, then the specifications in the certificate as well as all national and local regulations must be observed. The instrument is accompanied by separate "Ex documentation", which is an integral part of this Operating Instructions. The installation regulations, connection values and Safety Instructions listed in this Ex document must be observed. The documentation number of the related Safety Instructions is also indicated.

1.3.1 FCC approval

This instrument complies with part 15 of the FCC Rules. Operation is subject to the following two conditions:

1. This instrument may not cause harmful interference, and
2. this instrument must accept any interference received, including interference that may cause undesired operation.

Caution!
Changes or modifications not expressly approved by the part responsible for compliance could void the user's authority to operate the equipment.

1.4 Return

Follow the instructions on returning the instrument as outlined in the Operating Instructions on the CD-ROM provided.

1.5 Safety icons

Safety conventions	
	**Warning!** A warning highlights actions or procedures which, if not performed correctly, will lead to personal injury, a safety hazard or destruction of the instrument.
	**Caution!** Caution highlights actions or procedures which, if not performed correctly, may lead to personal injury or incorrect functioning of the instrument.
	**Note!** A note highlights actions or procedures which, if not performed correctly, may indirectly affect operation or may lead to an instrument response which is not planned.

2 Mounting

2.1 Quick installation guide

At mounting adjust the marking at the instrument flange!

Installation in vessel (free space):
Mark on process connector facing the nearest vessel wall!

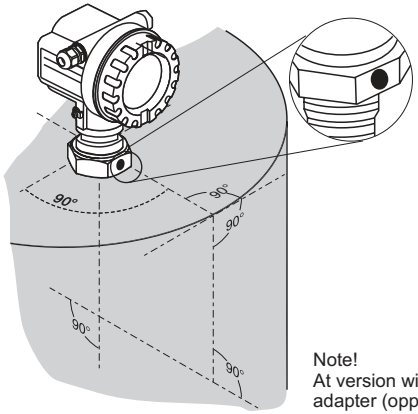

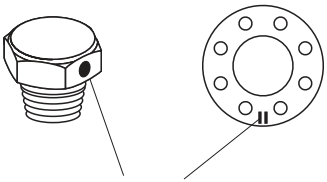

Note!
At version with top target positioner, the marker is at the housing adapter (opposite the air purge connection).

L00-FMR250xx-17-00-00-en-015

2.2 Incoming acceptance, transport, storage

2.2.1 Incoming acceptance

Check the packing and contents for any signs of damage. Check the shipment, make sure nothing is missing and that the scope of supply matches your order.

2.2.2 Transport

Caution!
Follow the safety instructions and transport conditions for instrument of more than 18 kg (39.69 lbs). Do not lift the measuring instrument by its housing in order to transport it.

2.2.3 Storage

Pack the measuring instrument so that is protected against impacts for storage and transport. The original packing material provides the optimum protection for this.
The permissible storage temperature is -40 °C to +80 °C (-40 °F to +176 °F) or -50 °C to +80 °C (-58 °F to +176 °F).

2.3 Installation

2.3.1 Mounting kit

For the mounting , you will require the following tool:

- The tool for flange mounting
- A key AF60 for threaded boss
- 4 mm (0.16 in) Allen wrench for turning the housing

2.3.2 General installation instructions

- Observe installation instructions, → 9.
- Marker is aligned towards vessel wall.
- The marker is always exactly in the middle between two bolt-holes in the flange.
- After mounting, the housing can be turned 350° in order to simplify access to the display and the terminal compartment, → 13.

2.3.3 Installation in vessel (free space)

Standard installation FMR250 with horn antenna

- The horn antenna should protrude from the nozzle. If this is not possible for mechanical reasons, larger nozzle heights can be accepted.

  Note!
  Please contact Endress+Hauser for application with higher nozzle.

- **Vertical horn antenna.**
  Ideally, the horn antenna should be installed vertically.To avoid interference reflections or for optimum alignment within the vessel, the FMR250 with optional top target positioner can be swiveled by 15° in all directions.

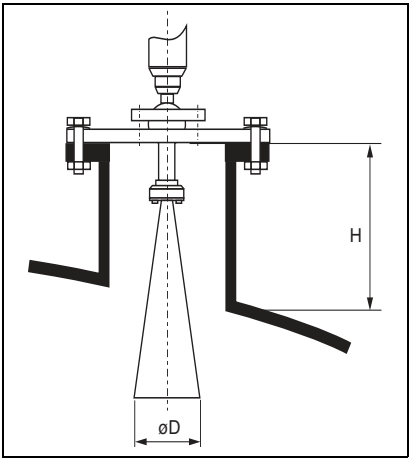

L00-FMR250xx-17-00-00-de-004

Antenna size	80 mm (3")	100 mm (4")
D [mm (in)]	75 (2.95)	95 (3.74)
H [mm (in)] without antenna extension	< 260 (< 10.2)	< 480 (< 18.9)

Standard installation FMR250 with parabolic antenna

- Ideally the parabolic antenna should protrude from the nozzle (1).
  Particularly when using the top target positioner, please ensure that the parabolic reflector is protruding from the nozzle/roof so as not to inhibit alignment.

  ✎ Note!
  For applications with higher nozzle it may be necessary to install the parabolic antenna completely in the nozzle (2), including the RF-wave guide (3) for the antenna (option "6"). The maximum height of the nozzle (H_{max}) to the parabolic mirror (option "G, H") should not exceed 500 mm (19.7 in). Interfering edges within the nozzle should be avoided.

- **Vertical parabolic antenna.**
  Ideally, the parabolic antenna should be installed vertically.To avoid interference reflections or for optimum alignment within the vessel, the FMR250 with optional top target positioner can be swiveled by 15° in all directions.

Parabolic antenna (Option "6")	Parabolic antenna (Option "G, H")
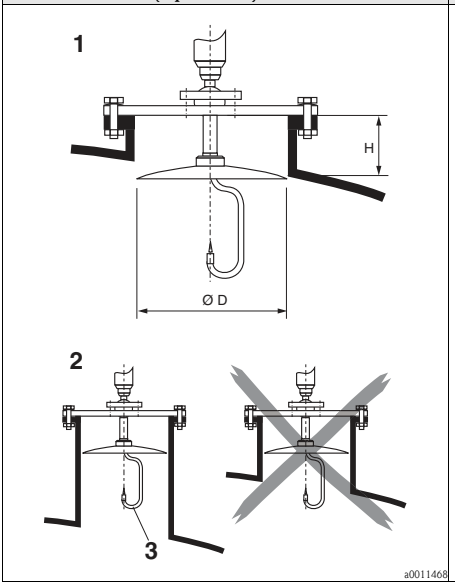	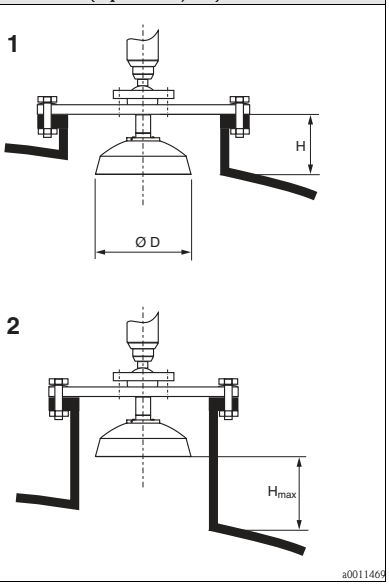

Parabolic antenna	Option "6"	Option "G"	Option "H"
Antenna size	200 mm (8")	200 mm (8")	250 mm (10")
D [mm (in)]	197 (7.76)	173 (6.81)	236 (9.29 in)
H [mm (in)] without antenna extension	< 50 (< 1.97)	< 50 (< 1.97)	< 50 (< 1.97)

2.3.4 Mounting with top target positioner

Using top target positioner it is possible to tilt the antenna axis by up to 15° in all directions. The top target positioner is used for the optimum alignment of the radar beam with the bulk solids surface.

Align antenna axis:

1. Loosen screws.
2. Align antenna axis (here this is possible up to max. ±15° in all directions).
3. Tighten screws.

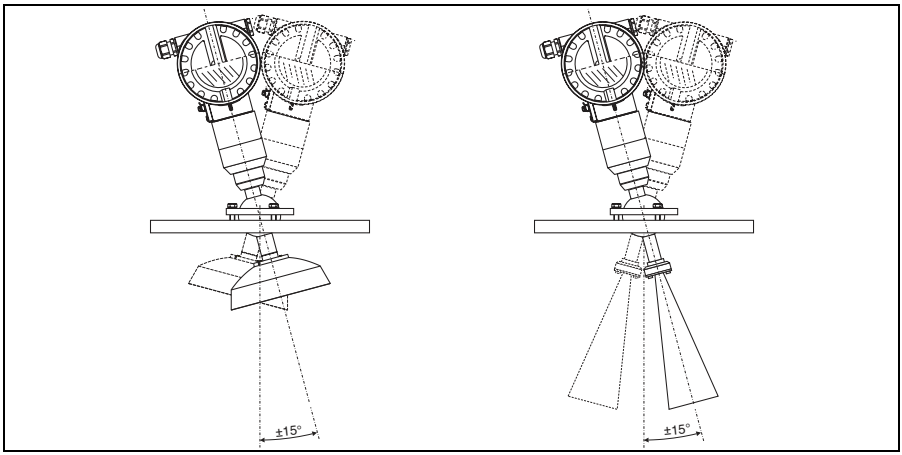

a0011472

2.3.5 Integrated air purge connection

In extremely dusty applications, the integrated air purge connection can prevent clogging of the antenna. Pulsed operation is recommended.

- Pulsed operation:
  max. pressure of purge air: 6 bar (87 psi).
- Permanent operation:
  recommended pressure range of the purge air: 200 mbar to 500 mbar (3 to 7.25 psi).

☝ Caution!
Make sure to use dry purge air.

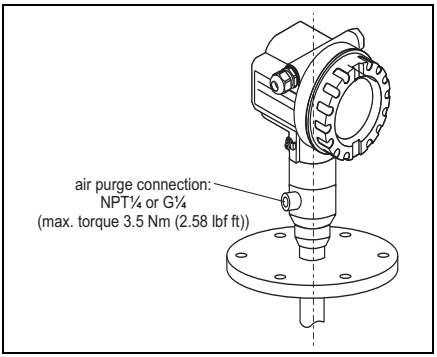

a0006211

2.3.6 Orientation

- Recommended distance (1) wall - outer edge of nozzle: ~1/6 of tank diameter. Nevertheless the device should not be installed closer than 20 cm (7.87 in) to the tankwall.

  ✎ Note!
  If the tank wall is not smooth (corrugated metal, welding seams, irregularities etc.) the distance from the wall should be kept as large as possible. If necessary, use an alignment unit to prevent interference reflections from the tank wall.

- Not in the centre (3), interference can cause signal loss.
- Not above the fill stream (4).
- It is recommended to use a weather protection cover (2) in order to protect the transmitter from direct sun or rain. Assembly and disassembly is simply done by means of a tension clamp (see Operation Instruction on the CD-ROM).
- In extremely dusty applications, the integrated air purge connection can prevent clogging of the antenna.

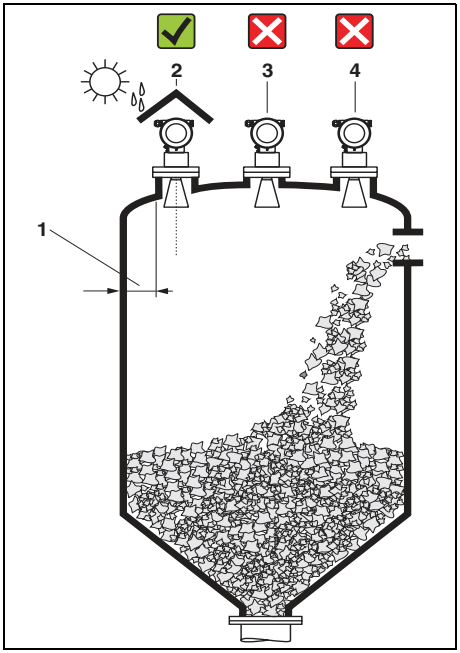

L00-FMR250xx-17-00-00-xx-003

2.3.7 Engineering hints

Vessel installations

- Avoid any installations (1), like limit switches, struts, etc., inside the signal beam (→ 🖹 11).
- Symmetrical installations (2), i.e. reinforcing rings, heating coils, etc., can also interfere with the measurement.

Optimization options

- Antenna size: the bigger the antenna, the smaller the beam angle, the less interference echoes.
- Mapping: the measurement can be optimized by means of electronic suppression of interference echoes.
- Antenna alignment: refer to BA331F/00/EN.
- In devices with top target positioner, the sensor can be optimally aimed within the vessel and/or interference reflections can be avoided. The max. angle β is: ±15°
- In particular, sensor alignment serves to:
  – prevent interference reflections
  – extend the maximum possible measuring range in conical outlets.
- Metallic screens (3) mounted at a slope spread the radar signals and can, therefore, reduce interference echoes.

Please contact Endress+Hauser for further information.

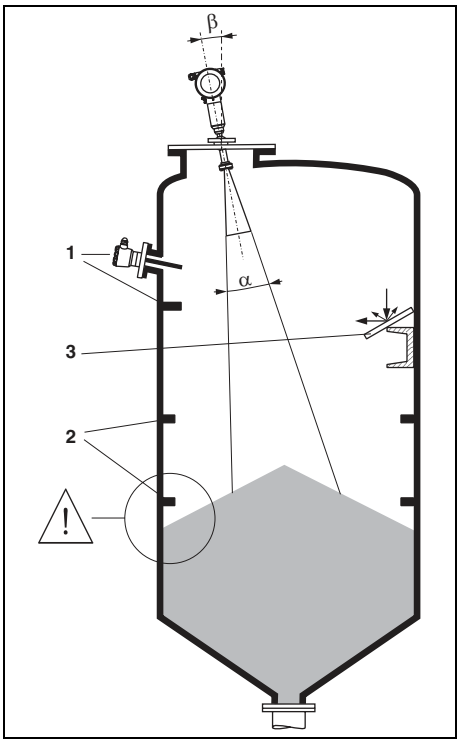

L00-FMR250xx-17-00-00-xx-002

2.3.8 Beam angle

The beam angle is defined as the angle α where the energy density of the radar waves reaches half the value of the maximum energy density (3dB-width). Microwaves are also emitted outside the signal beam and can be reflected off interfering installations. Beam diameter **W** as function of antenna type (beam angle **α**) and measuring distance **D**:

Horn antenna:

Antenna size	80 mm (3")	100 mm (4")
Beam angle α	10°	8°

Measuring distance (D)	**Beamwidth diameter (W)**	
5 m (16 ft)	0,87 m (2.9 ft)	0,70 m (2.3 ft)
10 m (33 ft)	1,75 m (5.7 ft)	1,40 m (4.6 ft)
15 m (49 ft)	2,62 m (8.6 ft)	2,10 m (6.9 ft)
20 m (66 ft)	3,50 m (11 ft)	2,80 m (9.2 ft)
30 m (98 ft)	5,25 m (17 ft)	4,20 m (14 ft)
40 m (131 ft)	7,00 m (23 ft)	5,59 m (18 ft)
50 m (164 ft)	8,75 m (29 ft)	6,99 m (23 ft)

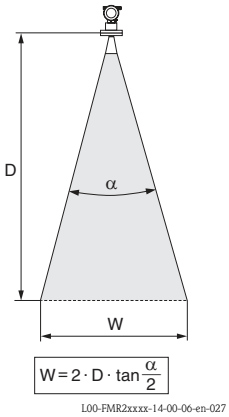

Parabolic antenna:

Antenna size	200 mm (8")	250 mm (10")
Beam angle α	4°	3,5°

Measuring distance (D)	**Beamwidth diameter (W)**	
5 m (16 ft)	0,35 m (1.1 ft)	0,30 m (1 ft)
10 m (33 ft)	0,70 m (2.3 ft)	0,61 m (2 ft)
15 m (49 ft)	1,05 m (3.4 ft)	0,92 m (3 ft)
20 m (66 ft)	1,40 m (4.6 ft)	1,22 m (4 ft)
30 m (98 ft)	2,10 m (6.9 ft)	1,83 m (6 ft)
40 m (131 ft)	2,79 m (9.2 ft)	2,44 m (8 ft)
50 m (164 ft)	3,50 m (11 ft)	3,06 m (10 ft)

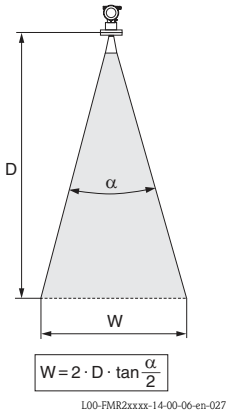

2.3.9 Measuring conditions

- The measuring range begins, where the beam hits the vessel bottom. Particularly with dish bottoms or conical outlets the level cannot be detected below this point. The maximum measuring range can be increased in such applications by using an alignment unit (→ 10).
- In case of media with a low dielectric constant (groups A and B), the vessel bottom can be visible through the medium at low levels. In order to guarantee the required accuracy in these cases, it is recommended to position the zero-point at a distance **C** (see Fig.) above the vessel bottom.
- In principle it is possible to measure up to the tip of the antenna with the FMR250. However, due to considerations regarding abrasion and build-up and depending on the orientation of the product surface (angel of repose), the end of the measuring range should be at a distance of **A** (see Fig.). If required, and if some conditions (high DC value, flat angle of repose) are met, shorter distances can be achieved.

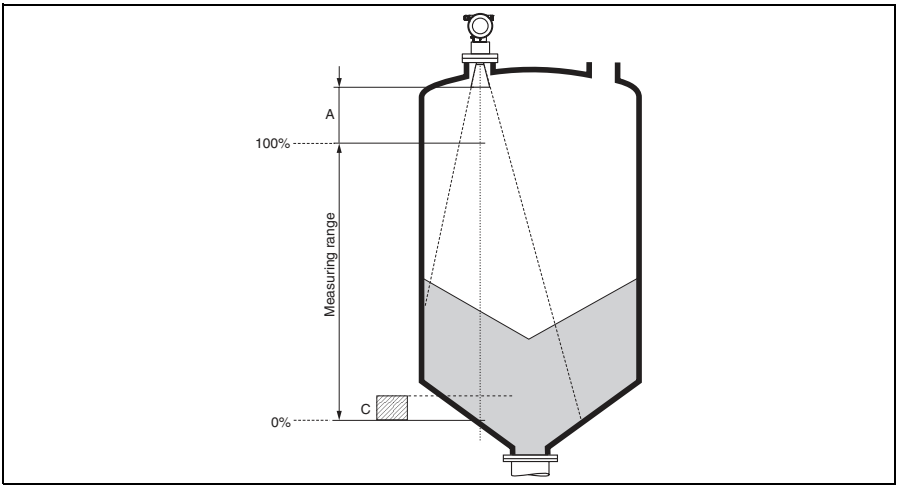

L00-FMR250xx-17-00-00-en-001

A [mm (in)]	C [mm (in)]
approx. 400 (15.7)	50 to 50 (1.97 to 5.91)

2.3.10 Turn housing

After mounting, the housing can be turned 350° in order to simplify access to the display and the terminal compartment. Proceed as follows to turn the housing to the required position:

- Undo the fixing screws (1)
- Turn the housing (2) in the required direction
- Tighten up the fixing screws (1)

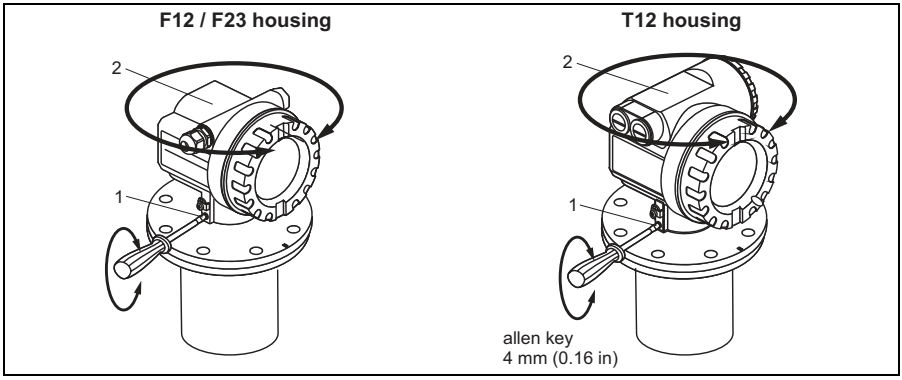

L00-FMR2xxxx-17-00-00-en-010

2.4 Post-installation check

After the measuring instrument has been installed, perform the following checks:

- Is the measuring instrument damaged (visual check)?
- Does the measuring instrument correspond to the measuring point specifications such as process temperature/pressure, ambient temperature, measuring range, etc.?
- Is the flange marking correctly aligned (→ 🖹 5)?
- Have the flange screws been tightened up with the respective tightening torque?
- Are the measuring point number and labeling correct (visual check)?
- Is the measuring instrument adequately protected against rain and direct sunlight (see Chapter "Accessories" in the Operating Instruction on the CD-ROM)?

3 Wiring

⚠ Warning!
When using the measuring instrument in hazardous areas, installation must comply with the corresponding national standards and regulations and the Safety Instructions or Installation or Control Drawings.

☝ Caution!
Before connection please note the following:
- The power supply must be identical to the data on the nameplate.
- Switch off power supply before connecting up the instrument.
- Use screened, twisted wire pair (refer to Operating Instruction on the CD-ROM.

3.1 Wiring in F12/F23 housing

1. Unscrew housing cover (1).
2. Remove any display (2) if fitted.
3. Remove cover plate from terminal compartment (3).
4. Pull out terminal module (4) slightly using "pulling loop".
5. Insert cable (5) through gland (6).
6. Make connection (see terminal assignment).
7. Re-insert terminal module (4).
8. Tighten cable gland (6).
9. Tighten screws on cover plate (3).
10. Insert display (2) if fitted.
11. Screw on housing cover (1).
12. Switch on power supply.

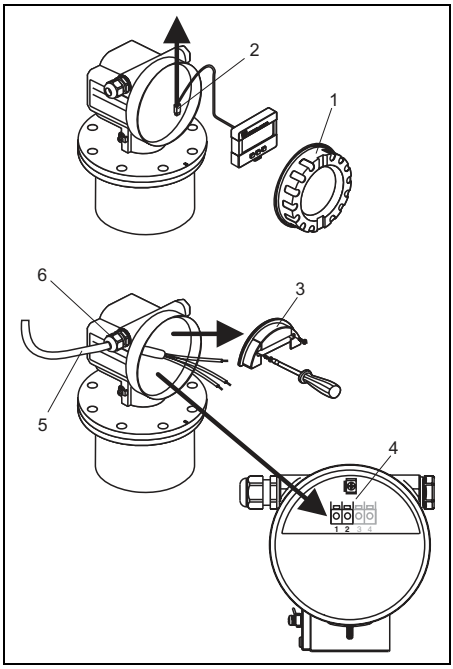

L00-FMR2xxxx-04-00-00-xx-001

3.2 Wiring in T12 housing

1. Unscrew housing cover (1).
2. Insert cable (2) through gland (3).
3. Connect cable screen to the grounding terminal (4) within the terminal compartment.
4. Make connection (see terminal assignment).
5. Tighten cable gland (3).
6. Screw on housing cover (1).
7. Switch on power supply.

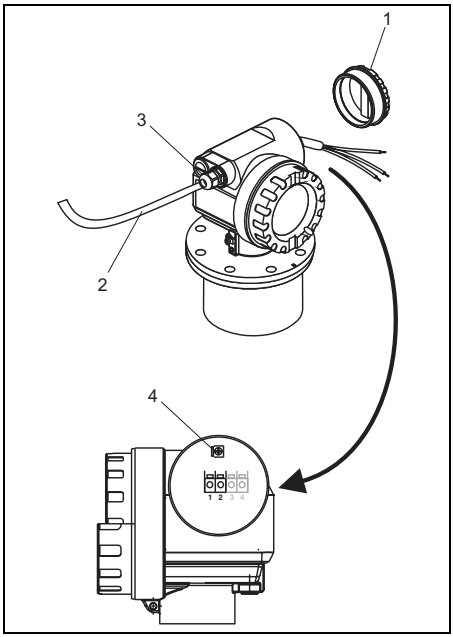

L00-FMR2xxxx-04-00-00-xx-002

3.3 Terminal assignment

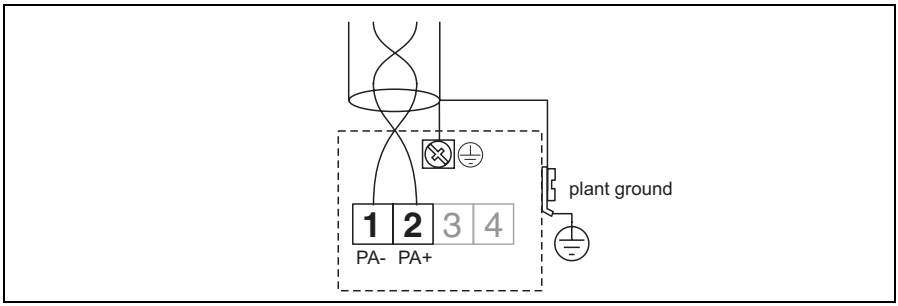

L00-FMP4xxxx-04-00-00-en-007

3.4 Cable specification PROFIBUS

Twisted, screened pairs must be used. The following cable types can be used, for example:

- Siemens 6XV1 830-5BH10 (grey)
- Kerpen CEL-PE/OSCR/PCV/FRLA FB-02YS(ST)YFL (grey)
- Belden 3076F (orange)

3.5 Connecting the measuring unit

Cable entry

- Cable gland: M20x1.5
- Cable entry: G½ or ½NPT

Supply voltage

The following values are the voltages across the terminals directly at the instrument:

Supply voltage	9 V to 32 V (non Ex) max. voltage: 35 V
Polarity sensitive	No
FISCO / FNICO compliant in accordance to IEC60079-27	Yes

Current consumption

- Device basic current: max. 13 mA
- Error current FDE (Fault Disconnection Electronic): 0 mA

3.6 Screening/potential matching

- You achieve optimum screening against disturbances if the screening is connected on both sides (in the cabinet and on the device). If you have to reckon with potential equalisation currents in the plant, only earth screening on one side, preferably at the transmitter.
- When using in hazardous areas, you must observe the applicable regulations and the separate Ex documentation.

3.7 Degree of protection

- with closed housing: IP65, NEMA4X (higher degree of protection e.g. IP68 on request)
- with open housing: IP20, NEMA1 (also ingress protection of the display)
- antenna: IP68 (NEMA6P)

Caution!
Degree of protection IP68 NEMA 6P applies for M12 PROFIBUS PA plugs only when the PROFIBUS cable is plugged in.

3.8 Post-connection check

After wiring the measuring instrument, perform the following checks:
- Is the terminal allocation correct (→ 15)?
- Is the cable gland tight?
- Is the housing cover screwed tight?
- If auxiliary power is available:
  Is the instrument ready for operation and does the liquid crystal display show any value?

4 Operation

4.1 General structure of the operating menu

The operating menu is made up of two levels:

- **Function groups (00, 01, 03, ..., 0C, 0D):**
  The individual operating options of the instrument are split up roughly into different function groups. The function groups that are available include, e.g.: **"basic setup"**, **"safety settings"**, **"output"**, **"display"**, etc.
- **Functions (001, 002, 003, ..., 0D8, 0D9):**
  Each function group consists of one or more functions. The functions perform the actual operation or parameterisation of the instrument. Numerical values can be entered here and parameters can be selected and saved. The available functions of the **"basic setup" (00)** function group include, e.g.: "**tank shape" (002)**, **"medium property" (003)**, **"process cond." (004)**, **"empty calibr." (005)**, etc.

If, for example, the application of the instrument is to be changed, carry out the following procedure:

1. Select the **"basic setup" (00)** function group.
2. Select the **"tank shape" (002)** function (where the existing tank shape is selected).

4.1.1 Identifying the functions

For simple orientation within the function menus, for each function a position is shown on the display.

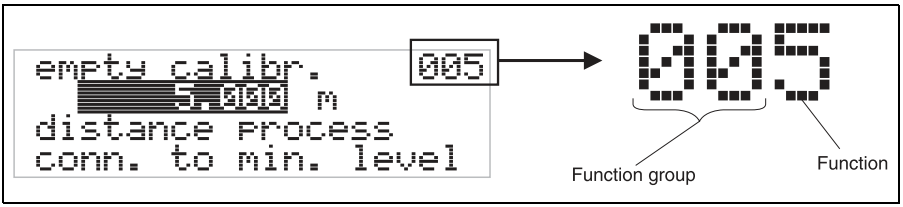

L00-FMRxxxxx-07-00-00-en-005

The first two digits identify the function group:

- **basic setup** **00**
- **safety settings** **01**
- **linearisation** **04**

...

The third digit numbers the individual functions within the function group:

■ **basic setup**	**00**	→	■ **tank shape**	**002**
			■ **medium property**	**003**
			■ **process cond.**	**004**
			...	

Here after the position is always given in brackets (e.g. **"tank shape" (002)**) after the described function.

4.2 Display and operating elements

Four lines with 20 characters each. Display contrast adjustable through key combination.

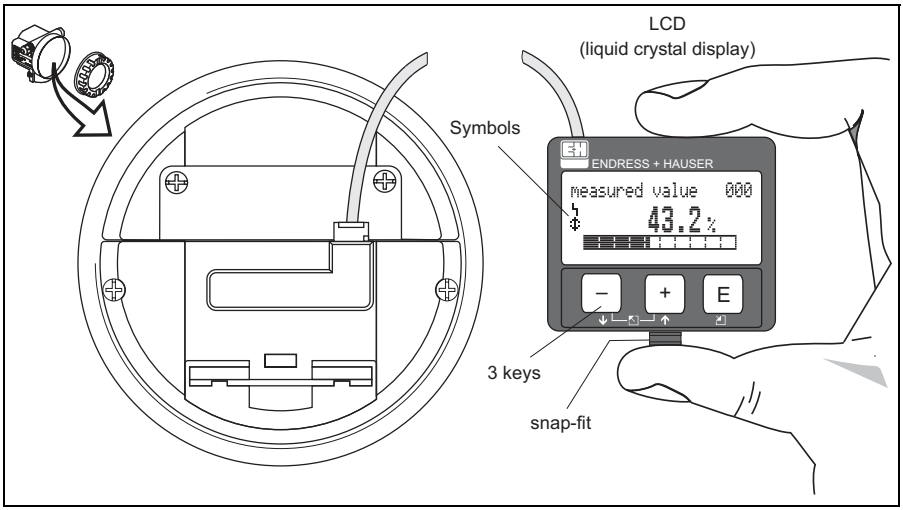

L00-FMxxxxxx-07-00-00-en-001

The LCD display can be removed to ease operation by simply pressing the snap-fit (see graphic above). It is connected to the device by means of a 500 mm (19.7 in) cable.

4.2.1 Display

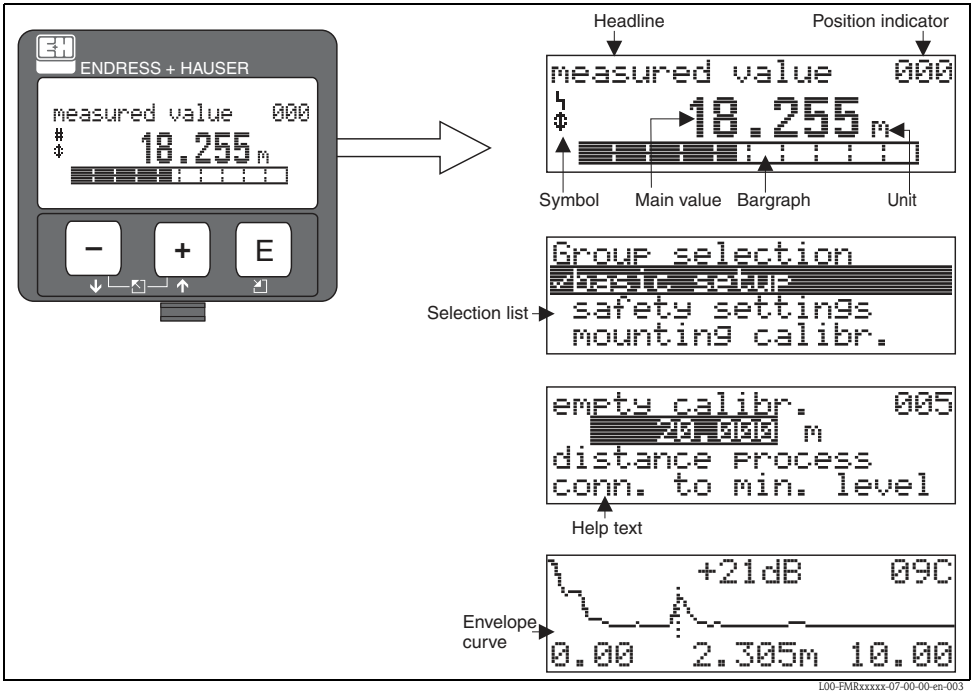

4.2.2 Display symbols

The following table describes the symbols that appear on the liquid crystal display:

Symbol	Meaning
	ALARM_SYMBOL This alarm symbol appears when the instrument is in an alarm state. If the symbol flashes, this indicates a warning.
	LOCK_SYMBOL This lock symbol appears when the instrument is locked, i.e. if no input is possible.
	COM_SYMBOL This communication symbol appears when a data transmission via e.g. HART, PROFIBUS PA or FOUNDATION Fieldbus is in progress.

4.2.3 Key assignment

Key(s)	Meaning
[+] or [↑]	Navigate upwards in the selection list. Edit numeric value within a function.
[−] or [↓]	Navigate downwards in the selection list. Edit numeric value within a function.
[Esc] [−] [+] or [←]	Navigate to the left within a function group.
[E]	Navigate to the right within a function group, confirmation.
[+] and [E] or [−] and [E]	Contrast settings of the LCD.
[+] and [−] and [E]	Hardware lock / unlock After a hardware lock, an operation of the instrument via display orcommunication is not possible! The hardware can only be unlocked via the display. An unlock parameter must be entered to do so.

4.3 Device address

4.3.1 Software addressing

Software addressing comes into operation, when DIP-switch 8 is in the position "ON". BA034S/04/EN describes, how to set the address in this case.

4.3.2 Hardware addressing

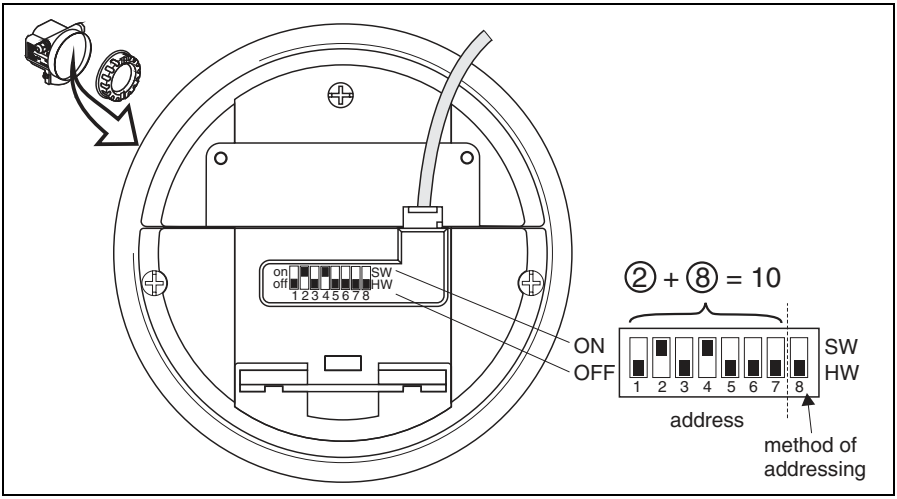

L00-FMU4xxxx-19-00-00-en-014

Hardware addressing comes into operation, when DIP switch 8 is in the position "HW (OFF)". In this case the address is determinded by the position of DIP-switches 1 to 7 according to the following table:

Switch No.	**1**	**2**	**3**	**4**	**5**	**6**	**7**
Value in position "OFF"	0	0	0	0	0	0	0
Value in position "ON"	1	2	4	8	16	32	64

The new address becomes valid 10 seconds after switching.
It results a new device restart.

5 Commissioning

5.1 Function check

Make sure that all final checks have been completed before you start up your measuring point:
- Checklist "Post-installation check", → 13.
- Checklist "Post-connection check", → 17.

5.2 Switching on the measuring device

When the instrument is switched on for the first time, the following messages appear in a sequence of 5 s on the display: software version, communication protocoll and language selection.

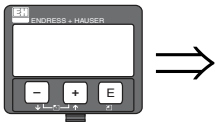

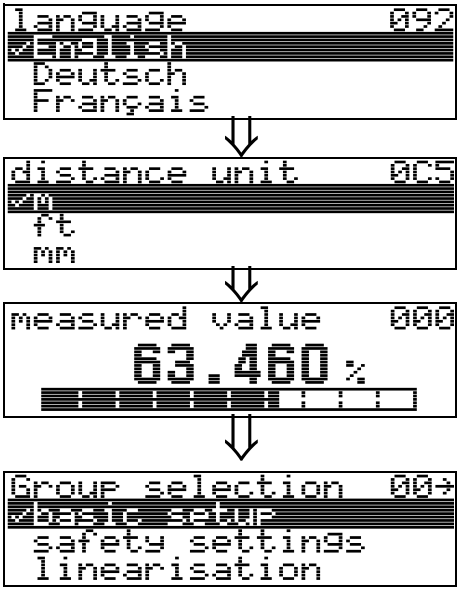

Select the language (this message appears the first time the instrument is switched on)

Select the basic unit (this message appears the first time the instrument is switched on)

The current measured value is displayed

After E is pressed, you reach the group selection

This selection enables you to perform the basic setup

5.3 Overview Basic Setup

level measurement in liquids

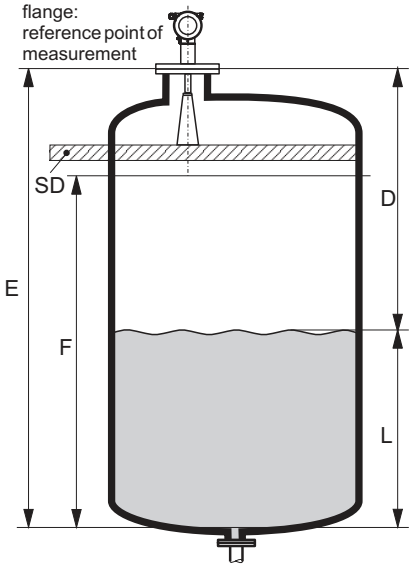

level measurement in solids

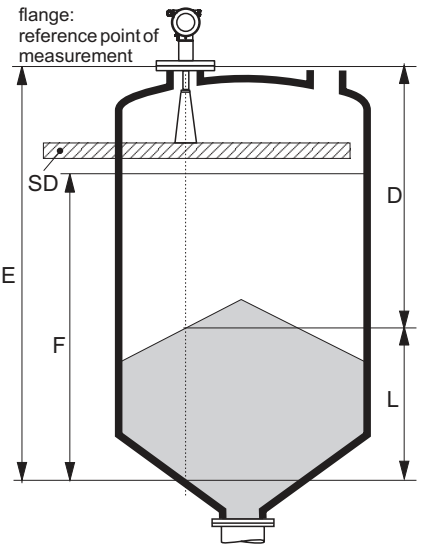

E = empty calibr. (= zero), setting in 005
F = full calibr. (= span), setting in 006
D = distance (distance flange / product), display in 0A5
L = level, display in 0A6
SD = safety distance, setting in 015

L00-FMR240xx-19-00-00-en-001

Caution!
The basic setup is sufficient for successful commissioning in most applications. Complex measuring operations necessitate additional functions that the user can use to customise the Micropilot as necessary to suit his specific requirements. The functions available to do this are described in detail in the BA291F/00/EN.

Comply with the following instructions when configuring the functions in the **"basic setup"** (00):
- Select the functions as described in BA331F/00/EN.
- Some functions can only be used depending on the parameterisation of the instrument. For example, the pipe diameter of a stilling well can only be entered if **"stilling well"** was selected beforehand in the **"tank shape" (002)** function.
- Certain functions (e.g. starting an interference echo mapping (053)) prompt you to confirm your data entries. Press [+] or [–] to select **"YES"** and press [E] to confirm. The function is now started.
- If you do not press a key during a configurable time period (→ function group **"display" (09)**), an automatic return is made to the home position (measured value display).

Note!
- The instrument continues to measure while data entry is in progress, i.e. the current measured values are output via the signal outputs in the normal way.
- If the envelope curve mode is active on the display, the measured values are updated in a slower cycle time. Thus, it is advisable to leave the envelope curve mode after the measuring point has been optimised.
- If the power supply fails, all preset and parameterised values remain safely stored in the EEPROM.
- All functions are described in detail, as is the overview of the operating menu itself, in the manual **"BA291F - Description of Instrument Functions"**, which is found on the enclosed CD-ROM.
- The default values of the parameters are typed in **boldface**.

5.4 Basic Setup with the device display

5.4.1 Function "measured value" (000)



This function displays the current measured value in the selected unit (see **"customer unit"(042)** function). The number of digits after decimal point can be selected in the **"no.of decimals" (095)** function.

5.4.2 Function group "basic setup" (00)



5.4.3 Function "media type" (001)



This function is used to select the media type.

Selection:
- liquid
- solid

With the selection "liquid" only the following functions can be adjusted:

■ tank shape	002
■ medium property	003
■ process cond.	004
■ empty calibr.	005
■ full calibr.	006
■ pipe diameter	007
■ check distance	051
■ range of mapping	052
■ start mapping	053
■ . . .	

With the selection "solids" only the following functions can be adjusted:

■ vessel / silo	00A
■ medium property	00B
■ process cond.	00C
■ empty calibr.	005
■ full calibr.	006
■ check distance	051
■ range of mapping	052
■ start mapping	053
■ . . .	

5.4.4 Function "tank shape" (002), liquids only

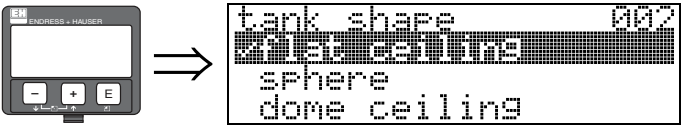

This function is used to select the tank shape.

Selection:

- **dome ceiling**
- horizontal cyl
- bypass
- stilling well
- flat ceiling
- sphere

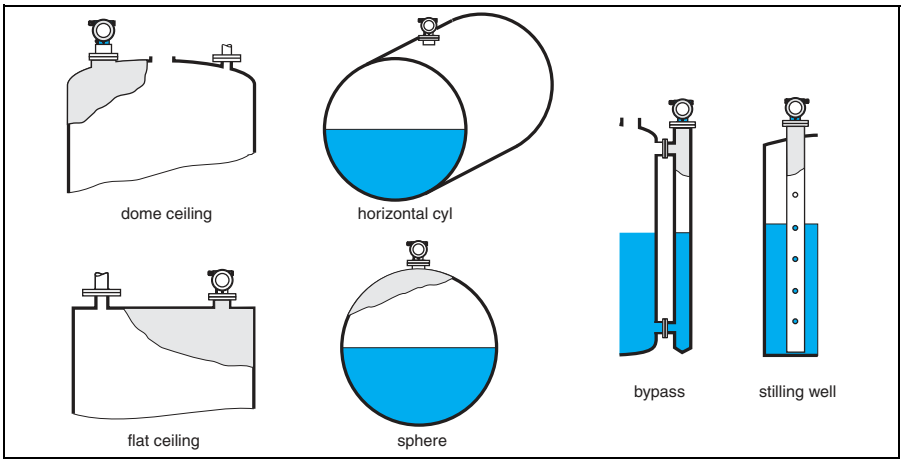

L00-FMR2xxxx-14-00-06-en-007

5.4.5 Function "medium property" (003), liquids only

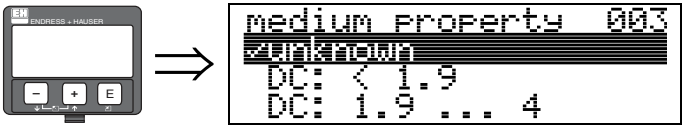

This function is used to select the dielectric constant.

Selection:
- **unknown**
- DC: < 1.9
- DC: 1.9 ... 4
- DC: 4 ... 10
- DC: > 10

Media group	DC (Er)	Examples
A	< 1.9	non-conducting liquids, e.g. liquefied gas[1)]
B	1.9 to 4	non-conducting liquids, e.g. benzene, oil, toluene ...
C	4 to 10	e.g. concentrated acids, organic solvents, esters, aniline, alcohol, acetone ...
D	> 10	conducting liquids, e.g. aqueous solutions, dilute acids and alkalis

1) Treat Ammonia NH3 as a medium of group A, i.e. use FMR230 in a stilling well.

5.4.6 Function "process cond." (004) , liquids only

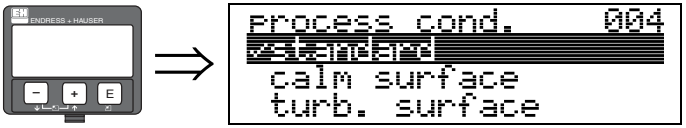

This function is used to select the process conditions.

Selection:
- **standard**
- calm surface
- turb. surface
- agitator
- fast change
- test: no filter

standard	calm surface	turb. surface
For all applications that do not fit into any of the following groups.	Storage tanks with immersion tube or bottom filling.	Storage / buffer tanks with rough surface due to free filling or mixer nozzles.
	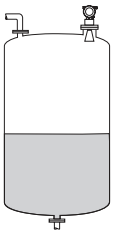 a0006540	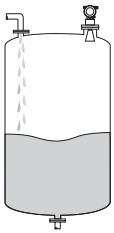 a0006538
The filter and output damping are set to average values.	The averaging filters and output damping are set to high values. → steady meas. value → precise measurement → slower reaction time	Special filters to smooth the input signals are emphasised. → smoothed meas. value → medium fast reaction time

agitator	fast change	test: no filter
Agitated surfaces (with possible vortex) due to agitators.	Rapid change of level, particularly in small tanks.	All filters can be switched off for service / diagnostic purposes.
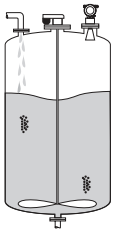 a0006537	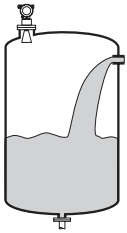 a0006539	
Special filters to smooth the input signals are set to high values. → smoothed meas. value → medium fast reaction time → minimization of effects by agitator blades.	The averaging filters are set to low values. The output damping is set to 0. → rapid reaction time → possibly unsteady meas. value	All filters off.

5.4.7 Function "vessel / silo" (00A), solids only



This function is used to select the vessel / silo.

Selection:
- **unknown**
- metal silo
- concrete silo
- bin / bunker
- dome
- stockpile
- conveyor belt

5.4.8 Function "medium property" (00B), solids only

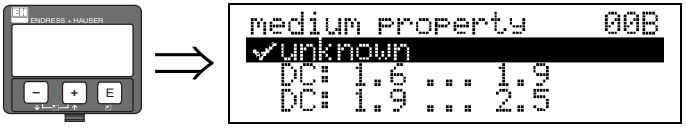

This function is used to select the dielectric constant.

Selection:
- **unknown**
- DC: 1.6 ... 1.9
- DC: 1.9 ... 2.5
- DC: 2.5 ... 4
- DC: 4 ... 7
- DC: > 7

Media group	DC (Εr)	Examples
A	1.6 to 1.9	Plastic granulate, White lime, special cement, sugar
B	1.9 to 2.5	Portland cement, plaster
C	2.5 to 4	Grain, seeds, ground stones, sand
D	4 to 7	naturally moist (ground) stones, ores, salt
E	> 7	Metallic powder, carbon black, coal

The respective lower group applies for very loose or loosened bulk solids.

5.4.9 Function "process cond." (00C), solids only



This function is used to select the process conditions.

Selection:
- **standard**
- fast change
- slow change
- test: no filter

5.4.10 Function "empty calibr." (005)



This function is used to enter the distance from the flange (reference point of the measurement) to the minimum level (=zero), → 24.

Caution!
For dish bottoms or conical outlets, the zero point should be no lower than the point at which the radar beam hits the bottom of the tank.

5.4.11 Function "full calibr." (006)

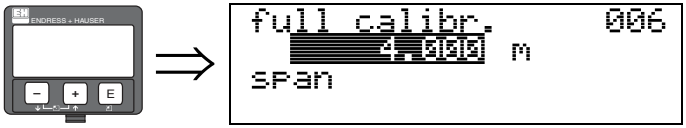

This function is used to enter the distance from the minimum level to the maximum level (=span). In principle, it is possible to measure up to the tip of the antenna. However, due to considerations regarding corrosion and build-up, the end of the measuring range should not be chosen any closer than 50 mm (1.97 in) to the tip of the antenna.

Note!
If **bypass** or **stilling well** was selected in the **"tank shape" (002)** function, the pipe diameter is requested in the following step.

5.4.12 Function "pipe diameter" (007)



This function is used to enter the pipe diameter of the stilling well or bypass pipe.Microwaves propagate more slowly in pipes than in free space. This effect depends on the inside diameter of the pipe and is automatically taken into account by the Micropilot. It is only necessary to enter the pipe diameter for applications in a bypass or stilling well.

5.4.13 Function "dist./meas.value" (008)

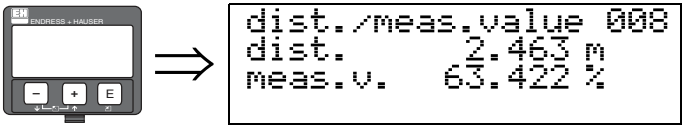

The **distance** measured from the reference point to the product surface and the **level** calculated with the aid of the empty adjustment are displayed. Check whether the values correspond to the actual meas. value or the actual distance. The following cases can occur:

- Distance correct - level correct → continue with the next function **"check distance" (051)**
- Distance correct - level incorrect → Check **"empty calibr." (005)**
- Distance incorrect - level incorrect → continue with the next function **"check distance" (051)**.

5.4.14 Function "check distance" (051)



This function triggers the mapping of interference echoes. To do so, the measured distance must be compared with the actual distance to the product surface. The following options are available for selection:

Selection:
- distance = ok
- dist. too small
- dist. too big
- **dist.unknown**
- manual

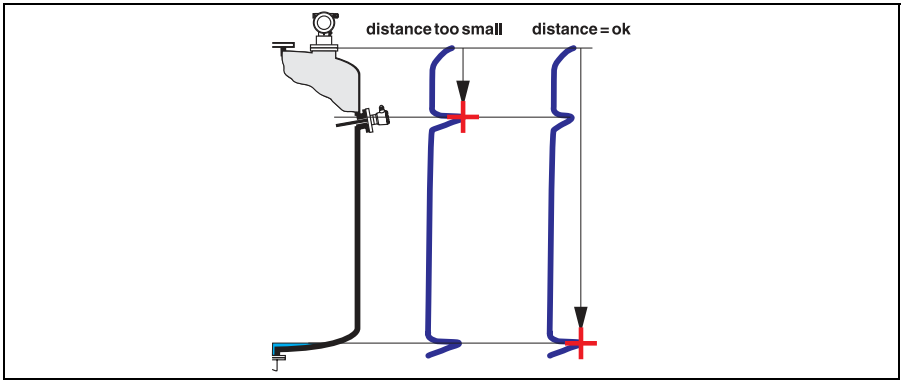

L00-FMR2xxxx-14-00-06-en-010

distance = ok
- mapping is carried out up to the currently measured echo
- The range to be suppressed is suggested in the **"range of mapping"(052)** function

Note!
Anyway, it is wise to carry out a mapping even in this case.

dist. too small
- At the moment, an interference is being evaluated
- Therefore, a mapping is carried out including the presently measured echoes
- The range to be suppressed is suggested in the **"range of mapping"(052)** function

dist. too big
- This error cannot be remedied by interference echo mapping
- Check the application parameters **(002)**, **(003)**, **(004)** and **"empty calibr." (005)**

dist. unknown
If the actual distance is not known, no mapping can be carried out.

manual
A mapping is also possible by manual entry of the range to be suppressed. This entry is made in the **"range of mapping"(052)** function.

Caution!
The range of mapping must end 0,5 m (1.6 ft) before the echo of the actual level. For an empty tank, do not enter E, but E - 0,5 m (1.6 ft). If a mapping already exists, it is overwriten up to the distance specified in **"range of mapping" (052)**. Beyond this value the existing mapping remains unchanged.

5.4.15 Function "range of mapping" (052)



This function displays the suggested range of mapping. The reference point is always the reference point of the measurement (→ 24). This value can be edited by the operator. For manual mapping, the default value is: 0 m.

5.4.16 Function "start mapping" (053)

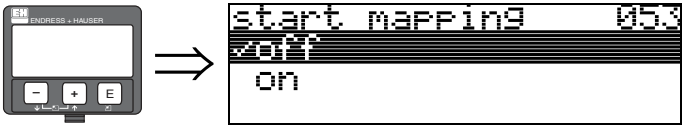

This function is used to start the interference echo mapping up to the distance given in **"range of mapping" (052)**.

Selection:
- **off**: no mapping is carried out
- on: mapping is started

During the mapping process the message **"record mapping"** is displayed.

Caution!
A mapping will be recorded only, if the device is not in alarm-state.

5.4.17 Function "dist./meas.value" (008)

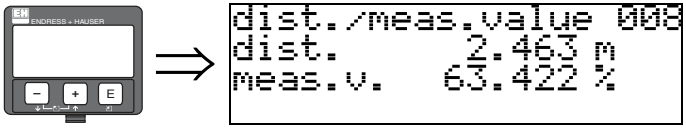

The **distance** measured from the reference point to the product surface and the **level** calculated with the aid of the empty adjustment are displayed. Check whether the values correspond to the actual meas. value or the actual distance. The following cases can occur:

- Distance correct – level correct → continue with the next function **"check distance" (051)**
- Distance correct – level incorrect → Check **"empty calibr." (005)**
- Distance incorrect – level incorrect → continue with the next function **"check distance" (051)**.

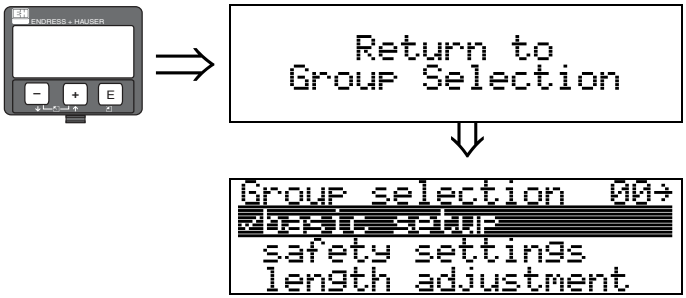

After 3 s, the following message appears

5.5 Envelope curve with the instrument display

After the basic setup, an evaluation of the measurement with the aid of the envelope curve (**"envelope curve" (0E)** function group) is recommended.

5.5.1 Function "plot settings" (0E1)

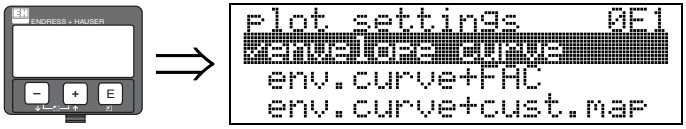

Select which information will be displayed in the LCD:

- **envelope curve**
- env.curve+FAC (on FAC see BA291F/00/EN)
- env.curve+cust.map (i.e. customer tank map is also displayed)

5.5.2 Function "recording curve" (0E2)

This function defines whether the envelope curve is read as a
- **single curve** or
- cyclic

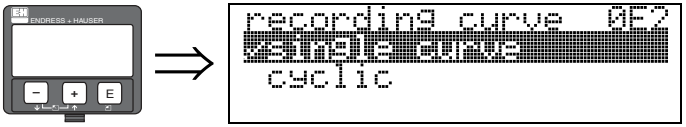

Note!
- If the cyclical envelope curve is active in the display, the measured value is refreshed in a slower cycle time. It is therefore recommended to exit the envelope curve display after optimising the measuring point.
- An orientation of the Micropilot can help to optimise measurement in applications with very weak level echos or strong interference echos by increasing the useful echo/reducing the interference echo (see Chapter "Orientation of the Micropilot", BA331F/00/EN).
  When using the Wave Guide antenna: **No** orientation is required!

5.5.3 Function "envelope curve display" (0E3)

The envelope curve is displayed in this function. You can use it to obtain the following information:

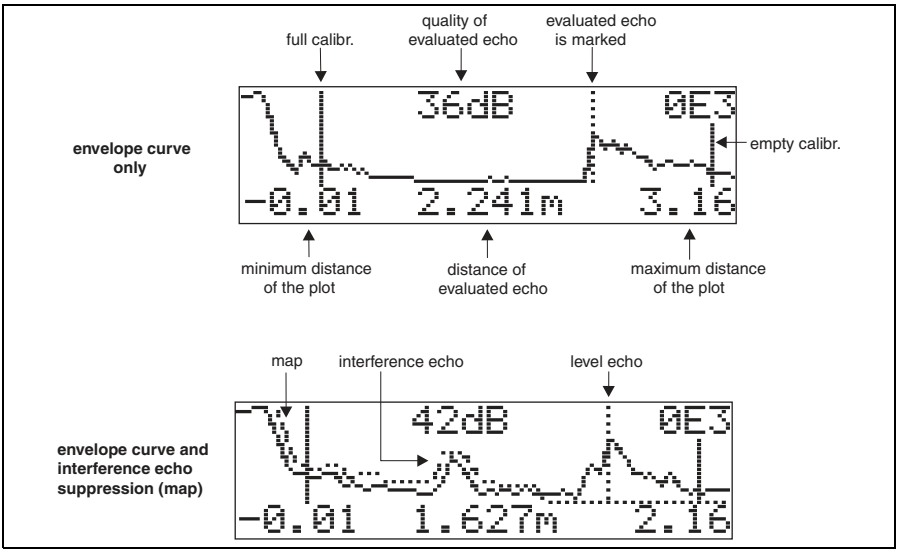

L00-FMUxxxx-07-00-00-en-003

www.endress.com/worldwide

Endress+Hauser

People for Process Automation

KA1016F/00/EN/12.09
71030619
CCS/FM+SGML 6.0 ProMoDo

71030619