SAMSON

AND
EVERYTHING
FLOWS



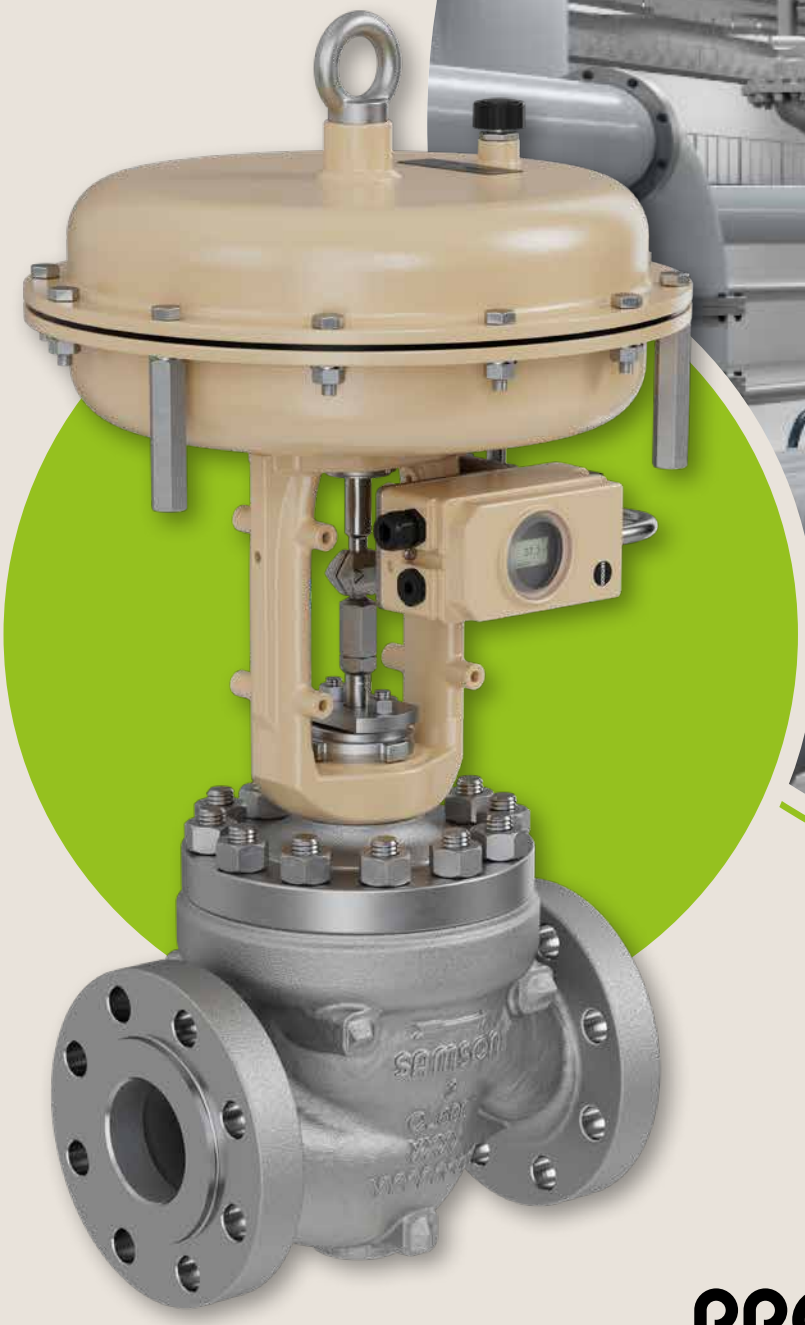

PRODUCT CATALOG

SAMSON PRODUCT RANGE

Products

Edition November 2025

Overview

Technical Basics	7
Control Valves	41
Actuators	96
Positioners	103
Valve Accessories	112
Converters	120
Measuring Equipment	122
Steam Generation · Steam Conditioning Condensate Systems	125
Devices for Cryogenic Applications	130
Electronic Digital Controllers	135
Electric Sensors and Thermostats	140
Software and Applications	141
Self-operated Temperature Regulators	145
Self-operated Pressure Regulators	154
Self-operated Flow and Differential Pressure Regulators	172
Pilot-operated Universal Regulators	177
Pressure-independent Control Valves	178
Strainers	181
Safety Instrumented Systems SIL Solutions	182
Appendix	185

Contents

Technical Basics

SAMSON control valves 112
Valve accessories 26
Self-operated regulators 28

Control Valves

Type 3241 Globe Valve 41
Type 3244 Three-way Valve 44
Type 3510 Micro-flow Valve
Type 3252 High-pressure Valve 46
Type 251GR Globe Valve 47
Type 3251 Globe Valve
Type 3256 Angle Valve 48
Type 3253 Three-way Valve
Type 3254 Globe Valve 53
Types 3281 and 3286 Steam Conditioning Valves 55
Components to reduce noise and wear
Flow dividers · AC trims · Perforated plug
Type 3381 Silencer 56
Type 3351 On/off Valve
Type 3353 Angle Seat Valve
Type 3354 Globe Valve 57
Pneumatic control valves for hygienic and aseptic applications
Type 3347 Hygienic Angle Valve 58
Type 3349 Aseptic Angle Valve 61
Type 3321CT Globe Valve 62
Pneumatic diaphragm valves for aseptic applications
SED Steripur Series Diaphragm Valves 63
SED KMA Series Diaphragm Valves 65
SED KMD Series Diaphragm Valves 67
Cryogenic valves
Type 3248 with bellows seal, top-entry design
Type 3246 with long insulating section and circulation inhibitor
Type 3598 with circulation inhibitor, top-entry design 69
High-performance control and shut-off butterfly valve
PFEIFFER Type 14p PSA 71
Type 3331 Butterfly Valve
LEUSCH Type LTR 43 High-pressure Butterfly Valve
PFEIFFER Types 10a, 10e and 14b/31a Control Butterfly Valves 72
PTFE or PFA-lined control valves
PFEIFFER Types 01a, 1b and 06a Globe Valves 74
PFEIFFER Types 20a and 20b Lined Ball Valves
PFEIFFER Types 22a, 26d and 26s Stainless Steel Ball Valves
PFEIFFER Types 28 and 29 Pigging Valves
PFEIFFER Types 27a, 27c, 27d, 27e and 27f Sampling Valves 75
CERA 1000 Ball Valves
CERA SYSTEM Types KST, KSV, KAT and KAV
CERA SYSTEM Type KGT and KZT 78
CERA 4300 Ball Valves
CERA SYSTEM Types KBR, KBRG and KBRZ
CERA SYSTEM Type KFK/KFL 80
CERA 1700 Sliding Disk Valve
CERA SYSTEM Type SSC 82
VETEC Types 82.7, 82.7-02 and 72.3 Rotary Plug Valves 83
High-pressure valve series
VETEC Types 73.7 and 73.3 Rotary Plug Valves 86
VETEC Type 62.7 Rotary Plug Valve 88
Type 3310 Segmented Ball Valve 89
Control valves with pneumatic or electric actuator
Type 3321 Globe Valve
Type 3323 Three-way Valve 91
Type 3531 Globe Valve for Heat Transfer Oil
Type 3535 Three-way Valve for Heat Transfer Oil 92
Pneumatic and electric control valves for HVAC systems/industrial applications
Types 3213, 3214, 3222, 3222 N and 3260 Globe Valves
Types 3260 and 3226 Three-way Valves 93

Actuators

Pneumatic actuators
Types 3277, 3271 96
Pneumatic actuators for the food and pharmaceutical industries
Type 3379 Pneumatic Actuator 98
Pneumatic rotary actuators
Type 3278 and PFEIFFER Type 31a 99
Electric actuators
Types 5827, 5857, 3374 100
Electric actuators with process controllers
DHW heating
TROVIS 5724-3 and TROVIS 5725-3 with fail-safe action · TROVIS 5757-3
Heating and cooling applications
TROVIS 5757-7, TROVIS 5724-8 and TROVIS 5725-8 with fail-safe action 101

Contents

Positioners

Pneumatic and electropneumatic positioners
Types 3766, 3767 103

Electropneumatic positioners for control applications
TROVIS 3730-1
Types 3725, 3730-0
Smart positioners
HART®:
Types 3730-3, 3731-3 and 3730-6,
TROVIS 3730-3 and TROVIS 3793
PROFIBUS PA:
Type 3730-4
FOUNDATION™ fieldbus:
Types 3730-5, 3731-5
PROFINET®:
TROVIS 3797
EXPERTplus valve diagnostics
Type 3770 Ex d/Ex i Field Barrier 104

Digital positioners for safety-instrumented systems
TROVIS SAFE 3730-6, 3731-3, 3793 109

Electronic positioner for the food and pharmaceutical industries
Type 3724 combined with Type 3379 Pneumatic Actuator 111

Valve Accessories

Types 4746, 4747, 4744, 3776 and 3768 Limit Switches
Type 4708 Supply Pressure Regulator
SAMSTATION Type 7029 Supply Pressure Regulator
Types 3962, 3963, 3967 and 3969 Solenoid Valves
Type 3709 Pneumatic Lock-Up Valve
Type 3710 Reversing Amplifier
Type 3755 Pneumatic Volume Booster
Type 3711 Quick Exhaust Valve
Type 7510 Air Receiver Tank/Emergency Air Supply 112

Converters

Types 6111, 6116 and 6126 i/p Converters
Types 6132 and 6134 p/i Converters 120

Measuring Equipment

Differential pressure, flow and liquid level meters
Media 5, Media 05 122

Media 7 123

Measuring and control station
Type 7400 124

Steam Generation · Steam Conditioning Condensate Systems

Types 7120, 7121, 7123, 7124, 7125, 7126, 7127, 7128, 7129 125

Type 7110 Water Bath Desuperheater
Type 3281 Steam Conditioning Valve
Type 7115 Spray Nozzle 127

Type 7140 Condensate Recovery System
Type 7141 Condensate Vessel
Type 7142 Flash Vessel 129

Devices for Cryogenic Applications

Control valves for cryogenic service
Type 2357-1 Pressure Build-up Regulator
Type 2357-2 Excess Pressure Valve 130

Type 2357-11 Pressure Build-up Regulator
Type 2357-21 Excess Pressure Valve 131

Type 2357-3 Pressure Build-up Regulator 133

Self-operated temperature regulators for cryogenic applications
Type 2040 Safety Temperature Monitor (STM) 134

Electronic Digital Controllers

Heating and district heating controllers
TROVIS 5573, TROVIS 5573-1, TROVIS 5578-E, TROVIS I/O 135

SAM MOBILE+ Gateway
SAM HOME Gateway
Modbus to meter bus gateway
Converter or repeater CoRe02 138

Contents

Electric Sensors and Thermostats

Temperature sensors
Pt1000 resistors 139

Thermostats
Type 5343 Safety Temperature Monitor
Type 5344 Temperature Regulator
Type 5345 Safety Temperature Limiter
Types 5347, 5348 and 5349 Double Thermostats 140

Software and Applications

TROVIS-VIEW 6661 Software
Valve sizing
VDI 3805 records of products 141

Industry-specific application for smart valve diagnostics
SAM VALVE MANAGEMENT 142

Industry-specific application for district heating and cooling
SAM DISTRICT ENERGY 143

Predictive analytics for the process industry
SAM GUARD® 144

Self-operated Temperature Regulators

Temperature regulators
With Type 1, 4 and 4u Globe Valves
With Type 9 Three-way Valve 145

Types 2231, 2232 and 2234 Control Thermostats 147

Typetested safety devices
Type 2212 Safety Temperature Limiter (STL) 148

Typetested safety devices
Type 2213 Safety Temperature Monitor (STM) 149

Types 43-1, 43-2, 43-3, 43-5, 43-6 and 43-7 Temperature Regulators 150

Typetested safety devices
Type 2439 Safety Temperature Limiter 152

Type 2403 Safety Temperature Monitor 153

Self-operated Pressure Regulators

Type 2405 Pressure Reducing Valve
Type 2406 Excess Pressure Valve 154

Type 41-23 Pressure Reducing Valve
Type 41-73 Excess Pressure Valve 155

Types 44-0 B and 44-1 B Pressure Reducing Valves
Type 44-6 B Excess Pressure Valve 157

Type 2333 Pressure Reducing Valve with pilot valve
Type 2335 Excess Pressure Valve with pilot valve 159

Type 44-2 Pressure Reducing Valve
Types 44-3 and 44-9 Safety Shut-off Valves (SSV)
Type 44-7 Excess Pressure Valve
Type 44-4 Safety Excess Pressure Valve (SEV) 161

Self-operated pressure regulators for the food processing industry
Types 2371-00 and 2371-01 Excess Pressure Valves
Types 2371-10 and 2371-11 Pressure Reducing Valves 163

Type 2422/2424 Pressure Reducing Valve
Type 2422/2425 Excess Pressure Valve 165

Type 2404-1 Pressure Reducing Valve with pilot valve for small set point ranges (mbar) 167

Type 2404-2 Excess Pressure Valve with pilot valve for small set point ranges (mbar) 168

Self-operated Flow and Differential Pressure Regulators

Type 42-10 RS Check Valve (backflow protection) 169

Type 42-36 Flow Regulator 170

Flow and differential pressure regulators
Types 42-37, 42-39 172

Differential pressure regulators with closing actuator
Types 42-24, 42-28
Differential pressure regulator with opening actuator
Types 42-20, 42-25 174

Types 45-1, 45-2, 45-3 and 45-4 Differential Pressure Regulators with closing actuator
Type 45-9 Flow Regulator 175

Flow and differential pressure regulators
For installation in the return pipe · Types 46-7 and 47-5
For installation in the flow pipe · Types 47-1 and 47-4 176

Pilot-operated Universal Regulators

Pressure, differential pressure, flow rate, temperature or combined regulators, optionally with additional electric actuator
Type 2334 177

Pressure-independent Control Valves

Type 42-36 E Flow Regulator 178

Typed 2488 and 2489 Flow Regulators 180

Strainers

Type 1 N and 1 NI Strainers with threaded end connections

Type 2 N and Type 2 NI Strainers with flanged connections 181

Safety Instrumented Systems SIL solutions

Types 7301, 7305, 7315, 7316 182

Appendix

Index 185

Technical Basics

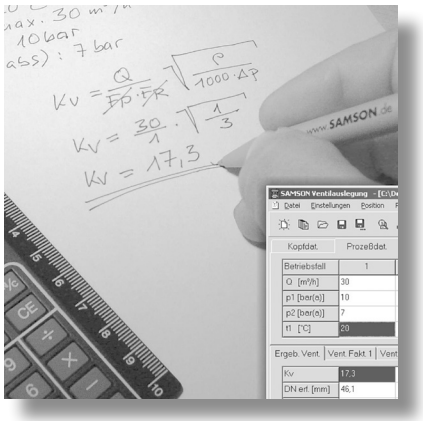

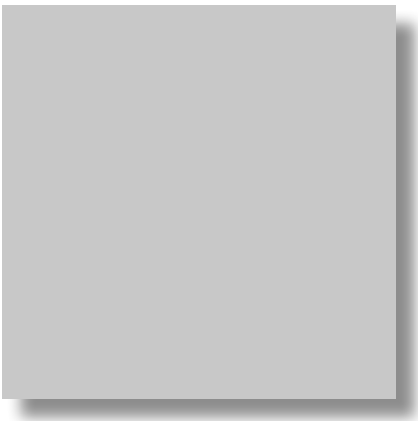

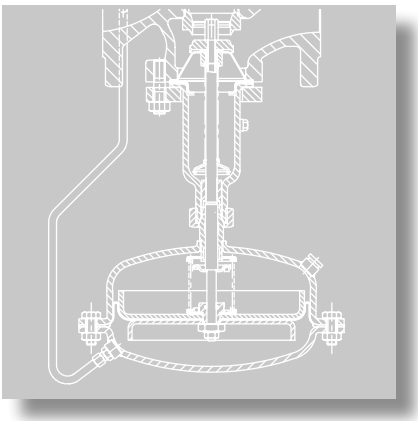

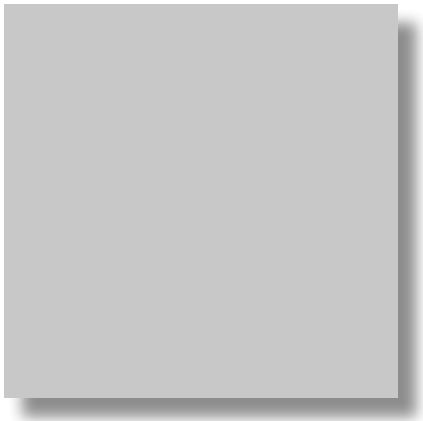

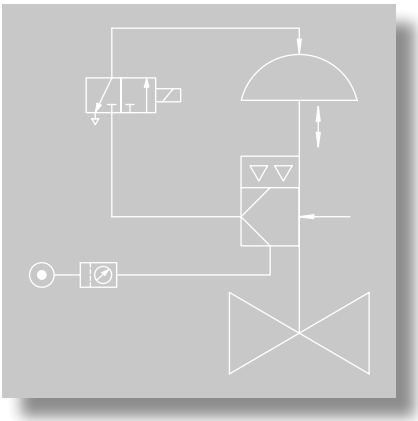

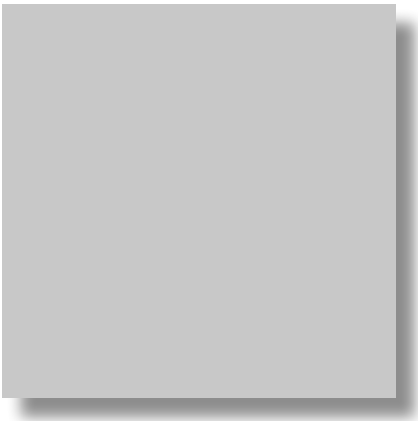

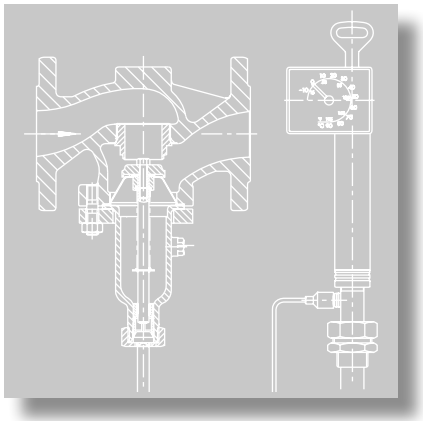

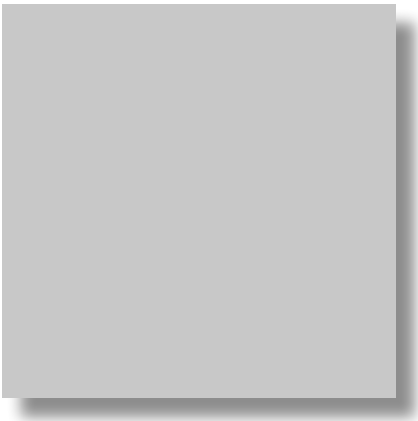

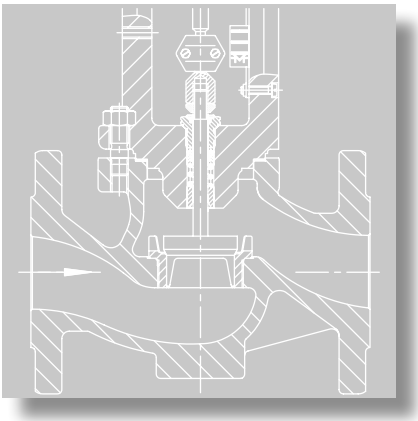

1 SAMSON control valves

SAMSON Series 240, 250, 280 and 290 as well as Series SMS Control Valves include pneumatic and electric globe valves, three-way valves and angle valves. Their application range covers control tasks in process engineering and industrial applications as well as in supply and power plant engineering.

The modular system allows easy retrofitting and servicing.

The control valves consist of the valve and actuator. They can be equipped either with pneumatic, electric, electrohydraulic or hand-operated actuators.

For controlling purposes and travel indication, valve accessories, such as positioners, limit switches and solenoid valves, can either be attached directly or according to IEC 60534-6 (NAMUR rib) (see Information Sheet ▶ T 8350).

The valve bodies are available in cast iron, spheroidal graphite iron, cast steel, cast stainless steel, cold-resisting steel, forged steel or forged stainless steel as well as special alloys. All parts of the valve and the pneumatic actuator housing in the completely corrosion-resistant version are made of stainless steel. Refer to the associated data sheets for details.

Series 240

Series 240 Control Valves are primarily used in the chemical industry. The valves are available as globe and three-way valves in nominal sizes ranging from DN 15 to 300 (NPS ½ to 12) and up to a pressure rating of PN 40 (Class 300).

Standard versions of the valves are suitable for temperature ranges between -10 and +220 °C (15 and 430 °F). An insulating section allows the temperature range to be extended to -196 and +450 °C (ANSI: -325 and +840 °F).

The plug stem is sealed either by a self-adjusting PTFE V-ring packing or an adjustable packing. To meet stricter emissions control requirements, a stainless steel bellows is used. The Type 3241 Valve can be equipped with a heating jacket that may also include the bellows seal.

Series 250

Series 250 Control Valves are used when large nominal sizes and/or high pressures are involved in process engineering, power plant or supply engineering.

They are manufactured in nominal sizes DN 15 to 500 (NPS ½ to 20) and pressure ratings PN 16 to 400 (Class 150 to 2500). In addition to globe, three-way and angle valves, customized valve constructions can be engineered.

Standard versions of the valves are suitable for temperature ranges between -10 and +220 °C (15 and 430 °F). The temperature range can, however, be extended by using an adjustable high-temperature packing to a temperature range between -10 and +350 °C (15 and 660 °F) and by using a bellows seal or an insulating section to a temperature range between -196 and +550 °C (ANSI: -325 and +1022 °F).

Series 250 Valves can be equipped with a heating jacket.

Series 280

Series 280 Steam-conditioning Valves are used to reduce both the steam pressure and steam temperature to optimize plant operation and heat efficiency in process plants, for example in refineries, food and beverage, tobacco or pulp and paper industries.

Steam-conditioning valves are based on Series 250 Valves fitted with a flow divider ST 3 and an additional cooling water connection.

Steam conditioning valves are available in nominal sizes ranging from DN 50 to 500 (NPS 2 to 20), for pressure ratings of PN 16 to 160 (Class 150 to 900) and for temperatures up to 500 °C (930 °F).

Series 290

Series 290 Control Valves are primarily used in the petrochemical industry and process engineering due to their maintenance-friendly properties. The seat is clamped into the valves to facilitate quick service.

Series 290 Valves are only available in ANSI versions in nominal sizes NPS ½ to 8 and pressure ratings Class 150 to 900. A bellows seal or insulating section allows the valves to be used in temperature ranges between -196 and +450 °C (-325 and +842 °F) depending on the material used.

Additional equipment includes flow dividers, heating jackets and balanced plugs. Furthermore, Series 290 Valves can be designed to meet NACE requirements for sour gas.

Series SMS

Series SMS Globe Valves are used in process engineering applications with high industrial requirements.

They are manufactured in nominal sizes DN 15 to 200 and pressure ratings PN 16 to 160. Standard versions of the valves are suitable for temperature ranges between -29 and +250 °C. The temperature range can be extended to a range between -50 and +600 °C.

Series V2001

The Series V2001 Valves are available as globe valves or as three-way valves for mixing or diverting service. They are manufactured in nominal sizes DN 15 to 100 (NPS ½ to 4) and pressure ratings PN 16 to 40 (Class 150 and 300). The standard versions of these valves are suitable for temperature ranges from -10 to +220 °C (14 to 430 °F). The use of an insulating section extends the temperature range to 300 °C (572 °F).

Series V2001 Valves are primarily designed for use in mechanical and plant engineering. A special attribute of the Type 3531 and Type 3535 Valves is their use in heat transfer applications using organic media (e.g. heat

transfer oil). The Type 3321 and Type 3323 Valves are suitable for liquids, gases and steam up to 350 °C (660 °F).

The standard version can also be fitted with additional equipment, such as bellows seals, insulating sections and flow dividers.

Valves for special applications

These valves are designed for special requirements. Such valves include cryogenic, diaphragm and micro-flow valves as well as valves for the food and pharmaceutical industries.

1.1 Valves

1.1.1 Valve body styles

The valve body, valve bonnet and, in some cases, the bottom flange are subject to internal stress caused by the process medium flowing through the valve. Consequently, the valves must be designed to be sufficiently resistant to mechanical and chemical stress.

Under the influence of the operating temperature, the material strength changes. This behavior can be improved by combining certain alloys. For this reason, heat-resisting materials are used at high temperatures (e.g. according to DIN EN 10213) and cold-resisting materials are used for cryogenic service. The materials table on page 22 and the Information Sheet ▶ T 8000-2 provide a summary.

Globe valve

Globe valves allow easy installation in straight pipelines. For pressure ratings up to PN 40 and nominal sizes up to DN 300, three-flanged bodies of the Series 240 are mainly used. The plug stem is guided in the valve bonnet and the V-port plug in the screwed-in seat.

The ports of the V-port plug are asymmetric in order to suppress any oscillations. Unguided parabolic plugs are used for small K_{VS} coefficients.

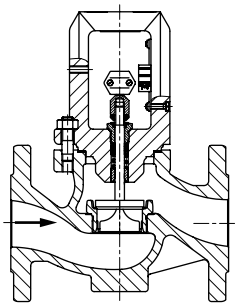

Type 3241 Globe Valve

To handle higher loads and when larger seat diameters are used, the Type 3254 Globe Valve (Series 250) is provided with an additional plug stem guide in the bottom flange.

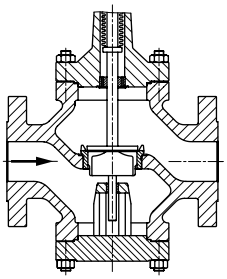

Additional plug stem guide in Type 3254

More details on globe valves in Data Sheets ▶ T 8015 and ▶ T 8060

Three-way valve

Three-way valves are used for mixing or diverting service. The mode of operation depends on how the two plugs are arranged. The direction of flow is indicated by arrows.

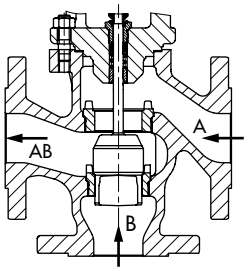

Mixing service with Type 3244 Three-way Valve

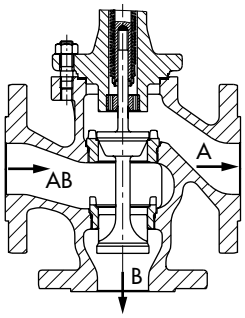

Flow-diverting service with Type 3244 Three-way Valve

More details on three-ways valves in Data Sheet ▶ T 8026.

Angle valve

Angle valves are ideally installed when a vertical pipeline and a horizontal pipeline need to be connected. The process medium is only diverted once. Angle valves allow the condensate to be optimally treated and are practically entirely self draining.

In case the process medium flows in the flow-to-close direction, wear in the valve outlet can be reduced by the use of an anti-wear sleeve.

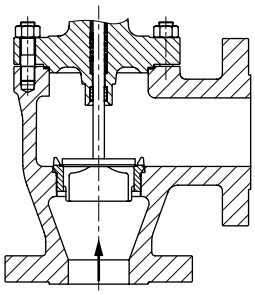

Type 3256 Angle Valve

More details on angle valves in Data Sheet ▶ T 8065

Cryogenic valve

Plants that produce liquefied, cryogenic air separation gases, often use vacuum-insulated pipelines to prevent environmental heat being transferred to the medium. The valves can be integrated into the vacuum jacket using a connecting flange. The valve is designed to widely prevent thermal conduction to the effect that the stem remains free of ice. A bellows seal serves as the primary sealing. The jacketed pipeline is evacuated of air and sealed off after installation of the components. The cryogenic extension bonnet of the valve is often welded to the jacketed pipeline over a flange, meaning considerable work is involved to remove the valve from the pipeline. However, to make maintenance possible, the internal parts can be accessed through the cryogenic extension bonnet without having to remove the valve from the pipeline.

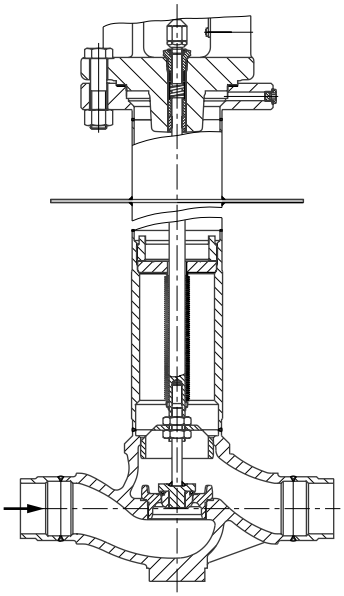

Type 3248 Cryogenic Valve

More details on cryogenic valves in Data Sheet ▶ T 8093

Diaphragm valve

For viscous or corrosive media possibly containing solids, diaphragm valves that are free of dead cavities and without stuffing boxes are an economical solution. The diaphragm may be made of rubber, nitrile, butyl or PTFE. The valve body may additionally be lined with rubber or ETFE.

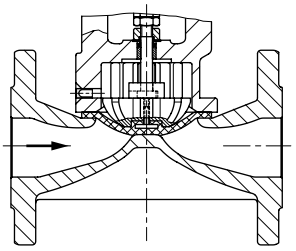

Type 3345 Diaphragm Valve

More details on diaphragm valves in Data Sheet ▶ T 8031

On/off valve

The valve for on/off service is used for tight shut-off of liquids, non-flammable gases and steam. As the valve plug is equipped with both a metal seal and a soft seal, the leakage class VI is achieved.

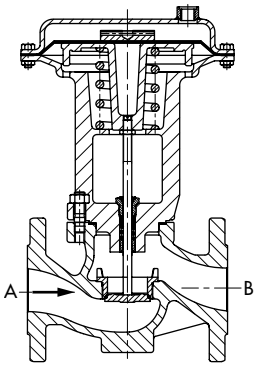

Type 3351 On/off Valve

More details on on/off valves in Data Sheet ▶ T 8039

Micro-flow valve

Micro-flow valves are used for very low flow rates (K_V coefficients <1.6 to 10^{-5} m³/h). The parts exposed to the process medium are made of stainless steel 1.4404. All valve parts are made of semi-finished products. As a result, special materials can be used in a particularly cost-effective manner and the valve covers a wide range of applications.

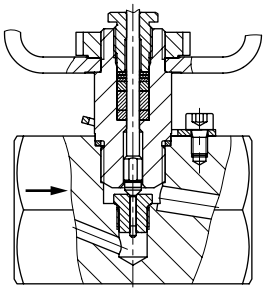

Type 3510 Micro-flow Valve

More details on micro-flow valves in Data Sheet ▶ T 8091

Steam conditioning valve

Steam-conditioning valves are used to reduce the steam pressure and the steam temperature simultaneously. A connecting pipe supplies the cooling water to the flow divider ST 3. At its inner wall, the cooling water comes into contact with the steam flow. The steam flow and the entrained water are mixed in the narrow wire mesh of the flow divider. As the supplied cooling water does not come into contact with the valve body, neither erosion nor thermal shock occur. The flow divider ensures low-noise and low-vibration operation.

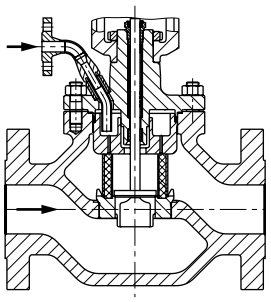

Type 3281 Steam Conditioning Valve

More details on steam-conditioning valves in Data Sheets ▶ T 8251 and ▶ T 8256

1.1.2 Valve bonnet

The valve bonnet seals off the valve at the top and accommodates the packing and the plug stem guide. The valve bonnet and the yoke of Series 240 Valves are incorporated in one piece. The valve bonnet and the yoke of Series 250 and 280 Valves are bolted together. The NAMUR rib standardized in IEC 60534-6 located on the yoke allows easy, standardized attachment of a positioner or other valve accessories. The valve bonnet is a pressurized part that is exposed to the process medium, therefore its material is subject to the same design requirements as the valve body.

Packing

The plug stem is sealed by the packing. The standard packing is used for standard versions, versions with bellows seal or insulating section or when the packing functions as a backup packing.

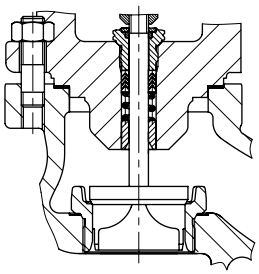

Valve bonnet of Series 240 Valves

The temperature range of the standard packing is between -10 and +220 °C and can be extended by the use of an insulating section on the valve bonnet.

Other packings can be installed for special applications (see Data Sheet ▶ **T 8000-6**).

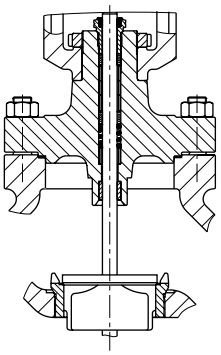

Valve bonnet of Series 250 Valves

The packings meet the fugitive emission requirements according to VDI 2440 and, as a result, fulfill the requirements of TA Luft (German technical instructions on air quality control). SAMSON's ISO packings are tested based on EN ISO 15848 and comply with the external leakage rates depending on the temperature, load and pressure even in continuous operation.

SAMSON issues corresponding manufacturer's declarations for the valve series and models.

Packing forms

Standard form

Temperatures: -10 to +220 °C

Spring-loaded V-ring packing made of PTFE-carbon for nominal sizes DN 15 to 150. Self-adjusting PTFE compound and PTFE-silk packing for nominal sizes DN 200 to 500.
Suitable for all applications that require a high level of sealing performance, yet requiring hardly any maintenance.

Form A

Adjustable, cavity-free PTFE-silk/PTFE-carbon packing. Especially suitable for process media that crystallize or polymerize.

Form B

Adjustable, cavity-free PTFE-silk/pure PTFE packing. PTFE-silk for nominal sizes DN 200 to 500.
Suitable for process media that crystallize or polymerize and in cases where the carbon particles would contaminate the process medium.

Form D

Spring-loaded V-ring packing made of pure PTFE.
Suitable for pure process media where the carbon particles would contaminate the process medium.

Form W

Adjustable, cavity-free packing made of PTFE-graphite thread and carbon for fresh and service water. The carbon bushings serve as wipers.
Especially suitable for hard water and any process media that may cause deposits to form on the plug stem.

NACE standard

Spring-loaded V-ring packing made of PTFE-carbon according to NACE standard.
Suitable for sour gas or sour water.

Packing versions for extended operating conditions available on request.

1.1.3 Seat and plug

The design of the seat and the plug determines the K_{VS} (C_V) coefficient, characteristic and, seat leakage of a valve.

The drawings show seat-guided V-port plugs with asymmetric ports with metal seal and soft seal.

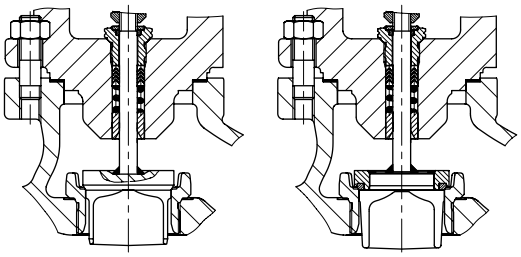

Metal seal Soft seal

The seat, plug and plug stem are made of stainless steel. In some cases, the trims are subject to high stress due to high differential pressures, cavitation, flashing or in cases where the process media contains solids. In order to increase the service life, seats and metal-seated plugs can have a Stellite® facing and plugs up to DN 100 can be made of solid Stellite.

The seats are screwed into place, allowing them to be easily exchanged. They may also be made of other materials.

Perforated plug

An optimized trim with perforated plug is available for Series 240 and 250 Valves. Perforated plugs are mainly used in severe service, e.g. in steam applications, two-phase medium flows, liquid media which vaporize on the outlet side (flashing valves) or emergency relief valves (blow-off valves) involving gas relief. In these applications, flow velocities lower than 0.3 Mach cannot usually be kept. The medium flows through the perforated plug, splitting up the jet stream into numerous smaller jets to ensure low-noise energy transfer to the surrounding medium.

More details on valves with perforated plugs in Data Sheet ▶ T 8086

Clamped-in seat

Series 290 Valves are fitted with a clamped-in seat which has two major benefits: in comparison to screwed seats, it cannot become undone. Furthermore, the clamped-in seat can be quickly removed and reinstalled using standard tools. This facilitates maintenance which meets the requirements of the oil and gas industry. Most plants in this industry cannot be shut down for servicing, meaning easy-to-service components are required. Furthermore, these seats are suitable for use in the steam and condensate area.

More details on Series 290 in Data Sheets ▶ T 8072-1 and ▶ T 8074-1.

Seat leakage

The seat leakage is determined according to IEC 60534, which specifies the maximum amount of the test process medium (gas or water) that may flow through the closed control valve under test conditions.

For special applications (e.g. using Type 3241-Gas) or with shut-off valves (Type 3351), a high leakage class can be achieved by using a high-performance metal seal or a soft seal for seat and plug.

Plug seal and seat leakage rate

Seat-plug seal	Leakage class DIN EN 60534-4 ANSI/FCI 70-2	Seat leakage % of K_{VS} (C_V)
Metal seal	IV	≤0.01
High-performance metal seal	V	IEC 60534-4, Table 3
Soft seal	VI	$0.3 \cdot \Delta p \cdot f_L$ [1)]
Pressure balancing with PTFE ring	V	IEC 60534-4, Table 3
Pressure balancing with graphite ring	IV	≤0.01

1) Leakage factor IEC 60534-4, section 5.5

Pressure balancing

If the actuator thrust is not sufficient to handle the differential pressure, pressure-balanced plugs are a good solution. The plug is designed to function as a piston. The upstream pressure p_1 is transferred to the back of the plug through a hole in the bottom of the plug. The forces acting on the plug are compensated for, with exception of the area around the plug stem.

Pressure-balanced plugs are additionally sealed with a PTFE ring or a graphite ring. The pressure-balanced components are subject to wear. As a result, the seat leakage rate (see table on page 14) and the amount of maintenance needed for these valves increase. Pressure-balanced plugs should not be used, if at all possible, for high-temperature process media or for media that contain solids or crystallize. In these cases, we recommend to use a more powerful actuator.

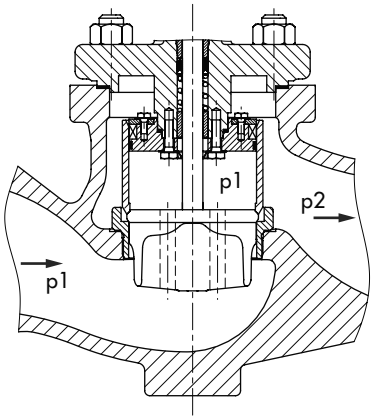

Plug with pressure balancing

Carbide or ceramic trims

Control valves with extremely resistant carbide or ceramic trims are used when the valve body and trim are subject to considerable erosion and abrasion.

The following valves can be fitted with carbide or ceramic trims:

- Type 3251 Globe Valve
- Type 3256 Angle Valve

The Type 3256 Angle Valve can be fitted with a ceramic wear-resistant pipe. When the process medium flows in the flow-to-close (FTC) direction, this version is suitable for extreme erosive and abrasive conditions caused by process medium containing solids.

Details on ceramic materials and their properties are available on request.

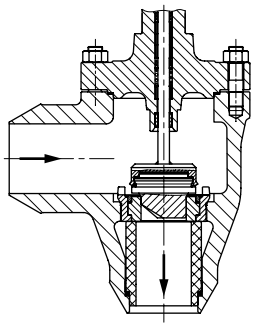

Type 3256 Angle Valve with ceramic trim and ceramic anti-wear pipe

More details on ceramic trims in Data Sheet ▶ T 8071

1.1.4 Low-noise operation

Flow divider

The flow dividers serve to reduce the noise emission of gases and vapors. The process medium reaches its maximum velocity after passing the restriction between seat and plug. Before it starts to create a noise-intensive, turbulent mixing zone, the process medium hits the inner wall of the flow divider. The flow is divided and a low-noise impulse exchange with the surrounding medium takes place.

The flow divider ST 1 has a single-ply perforated sheet steel and flow divider ST 2 a two-ply perforated sheet steel.

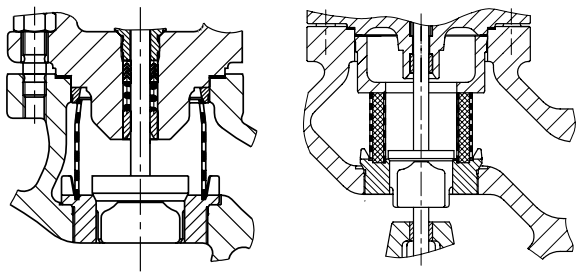

Flow divider ST 1 Flow divider ST 2

The flow divider ST 3 consists of a corrosion-resistant wire mesh, which can be additionally fitted with an internal and external perforated sheet steel for Series 250 Valves.

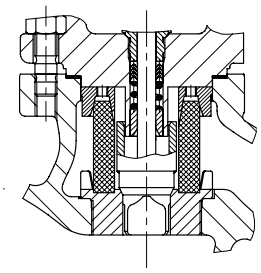

Flow divider ST 3

The valve-specific correction values for gases and vapors are required for noise calculation according to VDMA 24422, Edition 1989 and IEC 60534 when flow dividers are used. See the diagrams on page 20 for details.

The K_{VS} (C_V) coefficient of the valve trim is reduced by the flow divider. The K_{VS} (C_V) coefficients for the flow dividers ST 1, ST 2 and ST 3 are listed in the associated data sheet.

More details on flow dividers in Data Sheet ▶ T 8081

AC trim

AC-1 Trims is an optimized trim for low-noise pressure letdown of liquids at differential pressures up to 40 bar. The seat is raised and the parabolic plug is additionally guided in the seat.

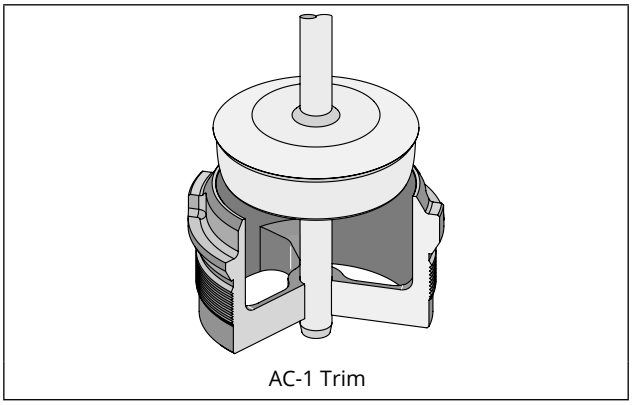

AC-1 Trim

The three-staged AC-3 Trim is used for differential pressures up to 100 bar. Optionally, Stellite® facings or hardened trims are available. For differential pressures over 100 bar, the five-staged AC-5 Trim is available.

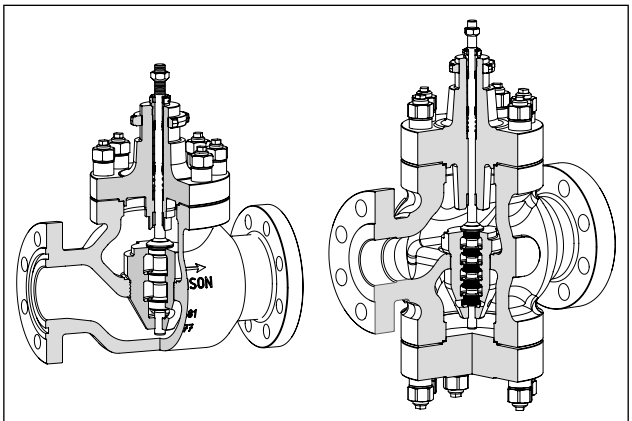

Type 3251 with AC-3 Trim Type 3254 with AC-5 Trim

More details on AC trims in Data Sheets ▶ T 8082 and ▶ T 8083

Silencer

The silencer acts as a fixed restrictor package that can be installed downstream of the valve with one to five attenuation plates for applications with gases or vapors. The silencer increases the backpressure downstream of the valve which leads to a reduction in the valve outlet velocity and sound pressure level. Additionally, the nominal outlet size can be extended. A pipe expander may be required depending on the version.

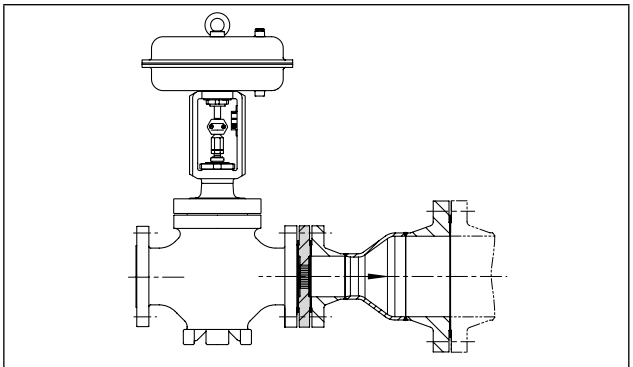

Type 3381-1: Single attenuation plate on the valve upstream of a possible pipe expander

In Type 3381-3-X, two to five attenuation plates can be installed one after the other in a housing integrated into the pipe expander.

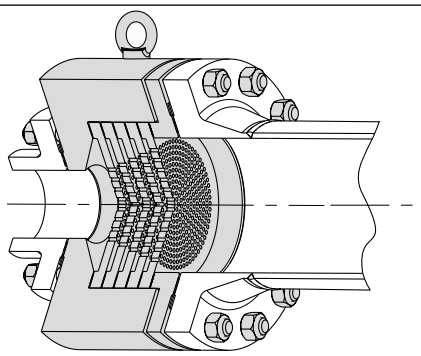

Type 3381-3-5: Five attenuation plates in a housing

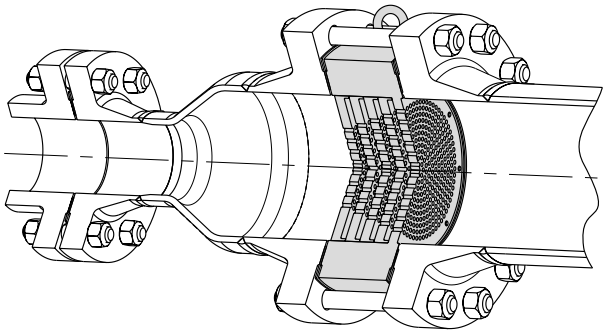

Type 3381-4-5: Five attenuation plates clamped between the pipe expander and pipeline (wafer-type version)

More details on silencers in Data Sheet ▶ T 8084

1.1.5 Additional components

Metal bellows seal

In case very strict emission control requirements must be met, e.g. TA Luft or in vacuum applications, a metal bellows is used to seal the plug stem. The plug stem is additionally sealed with a packing at the top flange. This packing serves as a backup packing.

The metal bellows can be monitored for leakage or a sealing medium can be applied by means of a test connection.

The bellows seal can be used for valves of Series 240 and 290 from -196 to +450 °C and Series 250 and 280 from -196 to +550 °C.

Higher temperatures for Series 250 and 280 on request

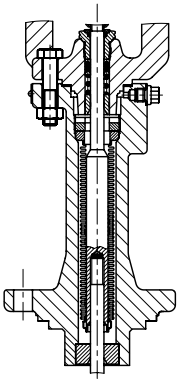

Metal bellows seal

Insulating section

The application range of a standard packing can be extended to an operating temperature of less than -10 °C or over +220 °C by using an insulating section.

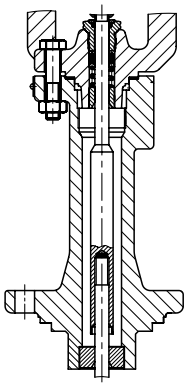

Insulating section

Temperature ranges of the various valves series:

Series 240:	-196 to +450 °C with long insulating section -50 to +450 °C with short insulating section
Series 250:	-196 to +550 °C
Series 280:	Max. 500 °C
Series 290:	-196 to +450 °C
Series SMS	-29 to +250 °C -50 to +425 °C with bellows seal -50 to +600 °C with insulating section

The specified temperature ranges may be restricted by the materials used as specified in the pressure-temperature diagram (Information Sheet ▶ T 8000-2).

Heating jacket

Some process media only flow easily above a certain temperature. Below this temperature they start to solidify or crystallize. The valve bodies are fitted with a heating jacket to ensure that the process medium remains at a certain temperature and can flow freely. The valve bonnet may also be equipped with a heating jacket when the plug stem is sealed by a bellows seal.

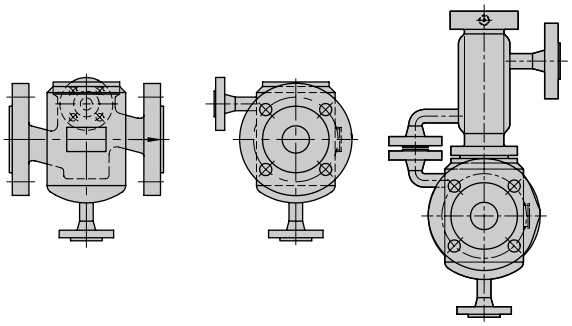

Type 3241 with heating jacket and with bellows heating

A heat transfer medium flowing between valve body and heating jacket ensures that the process medium is kept at a certain temperature. If steam is used as heating transfer medium, proper condensate discharge must be ensured.

Versions with heating of the connecting flanges or with heating of larger connecting flanges for the body are available on request.

1.1.6 Face-to-face dimensions

SAMSON valves with flanges have the same face-to-face dimensions as valves with welding ends.

Face-to-face dimensions according to DIN EN

PN	Globe valves Types 3241, 3251, 3254, 3281 and 3284
10...40	DIN EN 558, Series 1
63...100	DIN EN 558, Series 2
160	DIN EN 558, Series 2
250	DIN EN 558, Series 2
320	DIN EN 558, Series 2
400	Based on ASME B16.10 Class 2500, column 4
	Angle valves Types 3256 and 3286
10...40	DIN EN 558, Series 8
63...100	DIN EN 558, Series 9
160	DIN EN 558, Series 9
250	DIN EN 558, Series 93
320	DIN EN 558, Series 93
400	Based on ASME B16.10 Class 2500, column 6

Face-to-face dimensions according to ANSI

Class	Globe valves Types 3241, 3251, 3254, 3281 and 3291 [1]
125/150	ANSI/ISA-75.08.01
250/300	ANSI/ISA-75.08.01
600	ANSI/ISA-75.08.01
900	ASME B16.10 Class 900, column 5
1500	ASME B16.10 Class 1500, column 5
2500	ASME B16.10 Class 2500, column 4
	Angle valves Types 3256 and 3296 [1]
125/150	0.5 · ANSI/ISA-75.08.01
250/300	0.5 · ANSI/ISA-75.08.01
600	0.5 · ANSI/ISA-75.08.01
900	ASME B16.10 Class 900, column 7
1500	ASME B16.10 Class 1500, column 7
2500	ASME B16.10 Class 2500, column 6

1) Depending on the valve series, the pressure ratings are restricted as follows:
Series 240: only up to Class 300
Series 280 and 290: only up to Class 900

Versions with welding-neck ends are not standardized. Consult SAMSON first concerning their face-to-face dimensions.

1.1.7 Types of pipe connections

Flanged connections are most frequently used in industrial plants as they allow easy mounting and removal of valves and their milled facings provide excellent sealing reliability and quality.

A summary of flanges according to DIN EN standards, their connection dimensions and types of flange faces is provided in DIN EN 1092-1 for steel flanges and DIN EN 1092-2 for cast iron flanges.

The standard version of SAMSON valves has flanges with raised faces (Form B1). Other flange types are available on request.

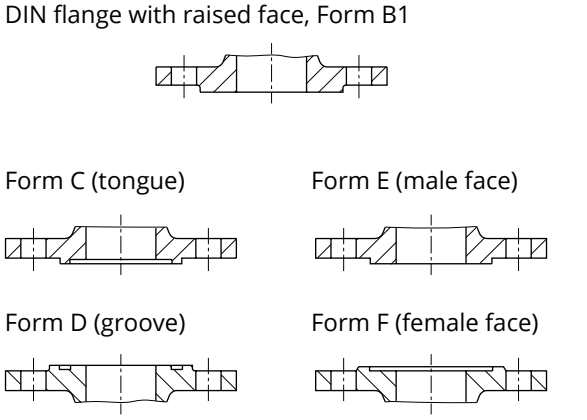

Flange types according to DIN

The US standard for cast iron flanges is ASME B16.1, ASME B16.42 for spheroidal graphite iron flanges and ASME B16.5 for steel flanges.

The standard version of cast iron valves with a pressure rating of Class 125 has flanges with flat faces.

Valves with a pressure rating of Class 300 have flanges with raised faces (0.06" height) and valves with higher pressure ratings have flanges with raised faces (0.25" height).

Other versions are available. Details available on request.

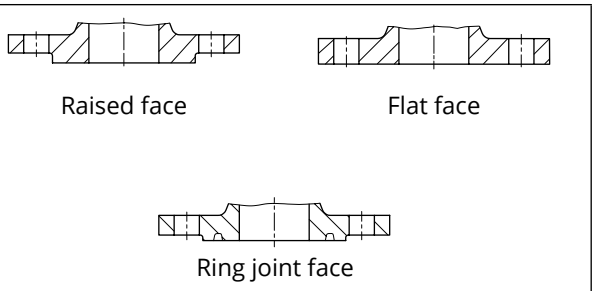

Flange types according to ANSI

For critical process media and/or high pressure ratings, the valve bodies can be supplied with welding ends or welding-neck ends. For control valves according to DIN standards, the welding ends conform to DIN EN 12627. For control valves according to US standards, the welding ends are specified in ASME B16.25.

For installation methods according to US standards, valves of the Series 240 are available with NPT female thread in sizes ½" to 2".

1.2 Rotary valves

Principle of operation

The actuator moves the closure member of a rotary valve from 0 to 270°. This causes the medium flow through the valve to be either throttled or shut off.

Special features

Rotary valves have a more compact design than globe valves. Consequently, these valves are more cost-efficient in large nominal sizes. Additionally, they have higher flow capacities. The advantages and disadvantages as well as the fields of application depend on the rotary valve design.

Designs

Butterfly valves

The shaft turns the butterfly disk used to shut off or to control the medium flow by up to 90°. The various butterfly valve designs, in particular the bearing design of the disk, allows the valves to be used for throttling or on/off service.

Butterfly valves in the wafer-type or lug-type design are cost-effective and use less material. They are primarily used for large nominal sizes.

Butterfly valves are only suitable in applications where the pressure drop is relatively low. Higher differential pressures cause higher noise emissions and increase the load on the valve components. Possible countermeasures are restricted by the valve construction and space available in the valve.

Ball valves

Either a ball with a cylindrical passage or a segmented V-notch ball is used in ball valves to control the flow rate or shut off the process medium. The ball is located between two metal or PTFE seat rings. The ball can be rotated by 90° (quarter-turn ball valve). The seat rings press against the ball and the sharp edges of the hole through the ball help wipe off particles that stick to the ball and cut off any long fibers.

When the valve is open, the full pipe cross-section is released, which causes a negligible loss in pressure and allows its use in pigging systems.

Careful machining of valve inside surfaces ensures that a gas-tight shut-off can be achieved even at high pressure drops. Due to the high friction torques and gas-tight shut-off, ball valves are mainly used in on/off service.

There are two types of ball valves: floating and trunnion-mounted ball valves. The ball of the trunnion-mounted ball valve is mounted on both sides, resulting in less friction torque which means smaller actuators can be used. Additionally, higher torques can be transferred which allows higher differential pressures to be controlled. However, mounting the ball on both sides makes the construction more complicated.

Segmented ball valves

The design of the segmented ball valve is based on the trunnion-mounted ball valve. In place of a solid ball, a segmented ball with either a linear or equal percentage characteristic is used. To reduce the wear on the body when controlling abrasive media, the direction of flow can be reversed. Special alloys can also be used on request. The segmented ball is sealed by a spring-loaded seat.

Segmented ball valves are characterized by low friction torque, high flow coefficients and a closure member with its own characteristic. As a result, they are often used for throttling service where the pressure drop is low in the open position.



Segmented ball valve with rotary actuator

Tank bottom valves

In tank bottom valves, the ball with its cylindrical bore rotates around the center axis. The rotary angle of the ball determines the flow rate across the free area between the body and the ball channel. PTFE-lined tank bottom valves are mainly suited for corrosive media.

In the standard version, these ball valves have a shaft which is located at an angle away from the tank. This allows the optimal position of the actuator to the tank.



Tank bottom valve

Rotary plug valves

A double offset is created in rotary plug valves: the center line of the shaft and plug (first offset) and the pivot of the plug (second offset). This double offset causes the plug to be immediately lifted out of the seat, resulting in no friction or initial breakaway torque when the shaft turns from the closed to the open position. The valve shows a stable control response, even at small opening angles.

The flow coefficient can be reduced by a smaller seat diameter. As a result, throttling service is possible when the valve is open even with medium differential pressures.

Rotary plug valves are mainly used for throttling service, especially for media containing solids.

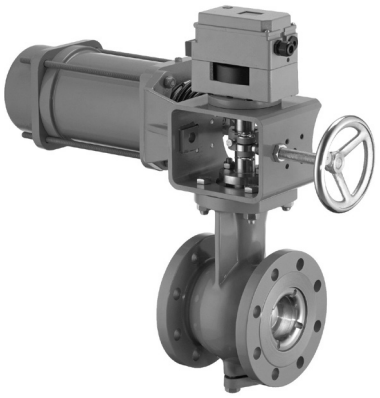

Rotary plug valve

1.3 Valve-specific parameters

K_{VS} or C_V coefficient

The K_V (C_V) coefficient is calculated according to IEC 60534 from the specified operating data.

The K_{VS} (C_V) coefficient is specified in the data sheets to identify the valves. It corresponds to the K_V coefficient at the rated travel H_{100}. In order to increase control accuracy and with regard to manufacturing tolerances, the selected K_{VS} (C_V) coefficient must be higher than the K_V coefficient.

Rangeability

The rangeability is the quotient of K_{VS}/K_{VR}. K_{VR} is the smallest K_V where the characteristic still lies within the permissible gradient tolerance of the characteristic (IEC 60534-2-4). See Information Sheet ▶ T 8000-3.

Inherent characteristic

The characteristic shows the relationship between the K_V flow coefficient and the travel (H).

Valves are either designed with an equal percentage or with a linear characteristic.

The equal percentage characteristic can be identified by equal increments of travel that yield equal percentage increments of the K_V flow coefficient.

Whereas, in a linear characteristic, equal increments of travel yield equal increments of the K_V flow coefficient.

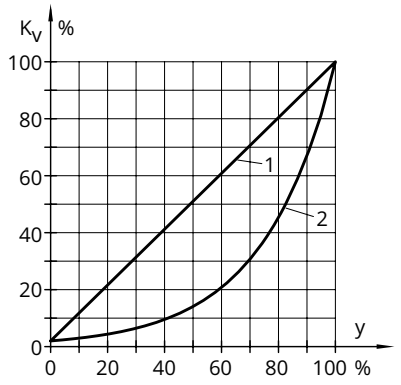

Valve characteristic: 1 - linear; 2 - equal percentage

1.3.1 Calculation of noise emission

Gases and vapors

The noise emitted by gases in single-stage and multi-stage valves is determined according to IEC 60534-8-3. This calculation method, however, does not apply to valves containing noise-reducing elements, such as flow dividers ST 1 to ST 3. In this case, calculation is performed according to VDMA 24422, Edition 1989.

The calculation is based upon the jet power reached on expansion. The noise emission is determined by means of an acoustic efficiency η_G.

Diagram 1 illustrates the difference between the conversion coefficients η_G depending on the differential pressure ratio. Assuming a differential pressure ratio of x = 0.5, the difference in sound pressure level is -20 dB between a valve without flow divider and a valve with a flow divider ST 3. The sound pressure level can be reduced considerably by the use of flow dividers.

Liquids

The noise emissions produced by valves used in throttling service of liquids are calculated according to IEC 60534-8-4. This calculation is consistent with the calculation according to VDMA 24422, Edition 1989. It is based on the jet power reached in the valve and also on the valve-specific acoustic efficiency η_F empirically determined according to VDMA 24422 for turbulent flows as well as the valve-specific pressure ratio x_{Fz} for incipient cavitation.

The sound power level and the sound pressure level difference at a distance of 1 m for the valves with different x_{Fz} values can be seen in the diagram 2.

For a pressure ratio of $x_F = 0.5$ and a valve with $x_{Fz} = 0.6$, the sound pressure level is 20 dB less than that of a valve with $x_{Fz} = 0.3$.

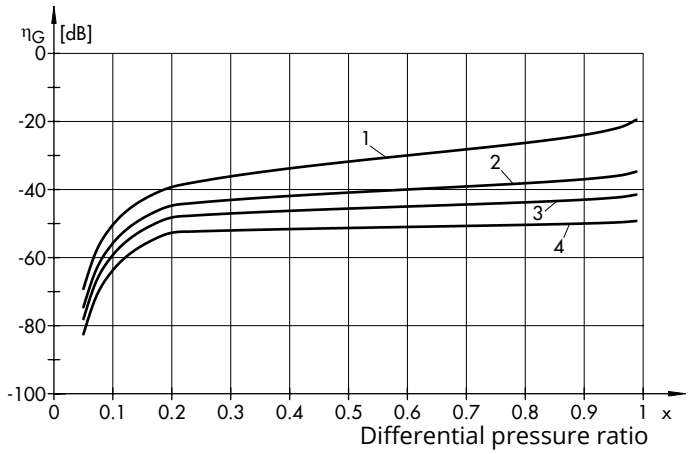

1 - without flow divider
2 - with flow divider ST 1
3 - with flow divider ST 2
4 - with flow divider ST 3

Diagram 1: Noise reduction with gases depending on the differential pressure using flow dividers

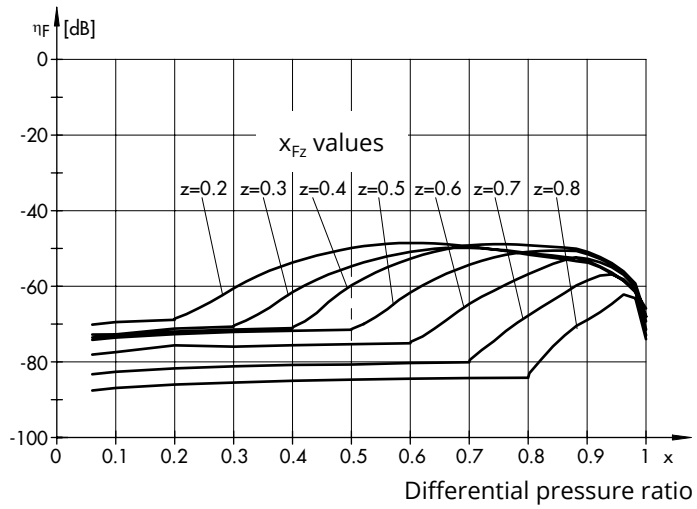

Diagram 2: Noise reduction with liquids depending on the differential pressure using flow dividers

1.3.2 Materials according to DIN and ANSI/ASME

The body materials mainly used and their temperature ranges are listed in the table below.

The associated pressure-temperature diagrams in Part 2 of this Information Sheet (▶ T 8000-2) include the materials' limits of application.

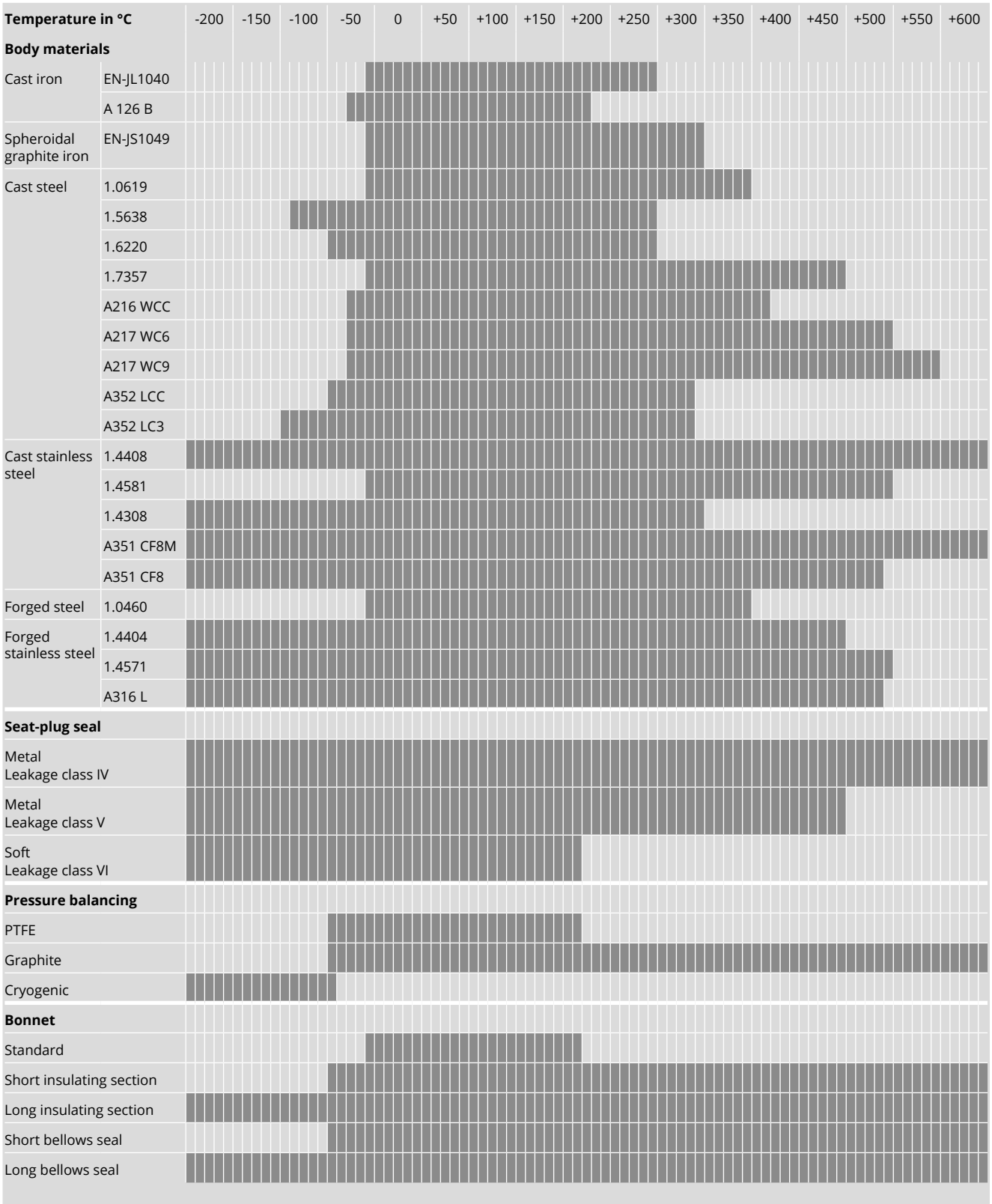

1.3.3 Selection and ordering

Selection and sizing of the control valve

1. Calculate the required K_V (C_V) coefficient according to IEC 60534. You may use, for example the SAMSON valve sizing software. This sizing usually is carried out by SAMSON. In cases where real operating data are used in the calculation, the following generally applies: K_{Vmax} = 0.7 to 0.8 · K_{VS}.
2. Select the K_{VS} coefficient and the nominal size DN according to the table in the corresponding data sheet.
3. Select the appropriate valve characteristic on the basis of the behavior of the controlled system.
4. Determine the permissible differential pressure Δp and select a suitable actuator using the differential pressure tables included in the associated data sheet.
5. Select the materials to be used with regard to corrosion, erosion, pressure and temperature using the materials tables and the associated pressure-temperature diagram.
6. Select the additional equipment, such as positioner and/ or limit switch.

Ordering data

The following specifications are required on ordering:

Valve model	… [1]
Nominal size DN	… [1]
Pressure rating PN	… [1]
Body material	… [1]
Type of end connections	Flanges/welding ends/welding-neck ends
Plug [1]	Standard, balanced, metal seal, soft seal, high-performance metal seal Hard facing, if required
Characteristic	Equal percentage or linear
Pneumatic actuator	Versions according to ▶ T 8310-1, ▶ T 8310-2, ▶ T 8310-3 and ▶ T 8310-8
Fail-safe action	Fail-open or fail-close
Transit time	Specifications only for special stroking speed requirements
Process medium	Density in kg/m³ in standard or operating state
Pressure	p_1 in bar (absolute pressure p_{abs}) p_2 in bar (absolute pressure p_{abs}) with minimum, normal and maximum flow rate
Valve accessories	Positioner and/or limit switch, position transmitter, solenoid valve, pneumatic lock-up valve, volume booster, supply pressure regulator

[1] When no specifications are made, we provide possible specifications

1.3.4 Specification sheet for control valves

				Specification sheet for control valves according to IEC 60534-7 X · Details that must be specified to select and size the valve				
	1		Operating data	Installation site				
	2			Control task				
	7	X		Pipeline	DN	PN	NPS	Class
	8			Pipe material				
	12	X		Process medium				
	13	X		State at the valve inlet	☐ Liquid	☐ Vapor	☐ Gas	
	15				Min.	Usual	Max.	Unit
	16	X		Flow rate				
	17	X		Input pressure p_1				
	18	X		Output pressure p_2				
	19	X		Temperature T_1				
	20	X		Input density ρ_1 or M				
	21	X		Vapor pressure P_V				
	22	X		Critical pressure P_C				
	23	X		Kinematic viscosity v				
	31			Calculation of max. flow coefficient K_V (C_V)				
	32			Calculation of min. flow coefficient K_V (C_V)				
	33			Selected flow coefficient K_{VS} or C_V				
	34			Calculated sound pressure level	dB(A)			
	35		Valve body	Type ... Valve				
	36			Style				
	38			Pressure rating	PN	Class		
	39			Nominal size	DN	NPS		
	40			Type of end connections	☐ Flanges	☐ Welding ends	☐ Welding-neck ends	☐ DIN/ ☐ ANSI
	43			Type of bonnet	☐ Normal	☐ Insulating section	☐ Bellows seal	☐ Heating jacket
	45			Body/bonnet material				
	47			Characteristic	☐ Linear	☐ Equal percentage		
	48			Plug/stem material				
	49			Bushing/seat material				
	52			Hard facing	☐ None	☐ Stellite® facing	☐ Completely of Stellite®	☐ Hardened
	54			Leakage class	☐ % K_{VS}	☐ Class		
	55			Packing material	☐ Standard	☐ Form		
	57		Actuator	Actuator type	☐ Pneumatic			
	60			Actuator area	cm²			
	62			Supply pressure	Min.	Max.		
	63			Bench range				
	64			Fail-safe action	☐ Fail-close	☐ Fail-open	☐ Fail in place	
	66			Other actuator types	☐ Electric	☐ Electrohydraulic	☐ Hand-operated	
	67			Fail-safe position for three-way valves				
	68			Additional manual override	☐ No	☐ Yes		
	70		Positioners	Type ... Positioner				
	71			Input signal	☐ Pneumatic	☐ Electric		
	72			Control valve OPEN at	bar	mA		
	73			Control valve CLOSED at	bar	mA		
	76			Air connection, max.	bar			
	78			Explosion protection	☐ Ex i	☐ Ex d		

				Specification sheet for control valves according to IEC 60534-7 X · Details that must be specified to select and size the valve			
	80		Limit switches	Type ... Limit Switch			
	81			Limit switches	☐ Electric	☐ Inductive	☐ Pneumatic
	82			Switching position	☐ Closed	☐ % travel	☐ Open
	83			Switching function	☐ Closing	☐ Opening	
	84			Explosion protection	☐ Ex i	☐ Ex d	

1.4 Actuators

Actuators convert the control signal from, for example a positioner into a travel motion carried out by the valve (plug stem with valve plug).

Pneumatic and electric actuators as well as hand-operated actuators are available (see Information Sheet ▶ T 8300).

Pneumatic actuators

Pneumatic actuators are used for pneumatic or electro-pneumatic instrumentation. The pneumatic actuators are diaphragm actuators with a rolling diaphragm and internally fitted springs. The benefits of pneumatic actuators include their low overall height, powerful thrust and stroking speed.

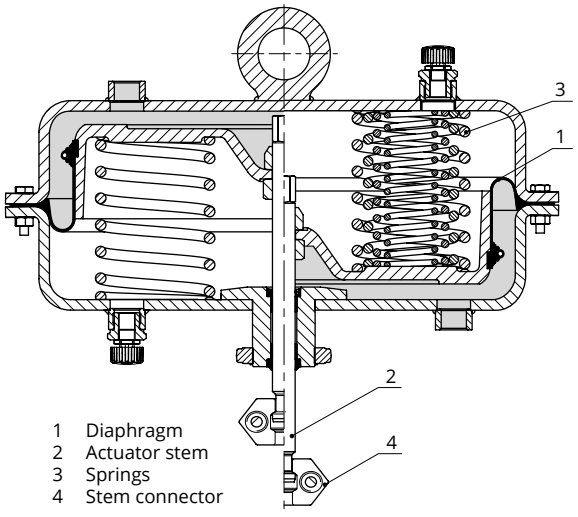

Type 3271 Pneumatic Actuator

Different signal pressure ranges are available. Pneumatic actuators are suitable for use in hazardous areas and feature fail-safe action (upon air supply failure, the control valve is either closed or opened).

The Type 3277 Pneumatic Actuators allow direct attachment of positioners or limit switches. The travel linkage is protected as it is located within the yoke below the diaphragm cases.

Pneumatic actuators can additionally be equipped with a handwheel (▶ T 8310-1 and ▶ T 8312).

Electric actuators

The benefits of electric actuators include their excellent control properties and low power consumption. A series of modules can be added to these actuators, permitting them to be adapted to the specific control task.

The actuators are available in versions for three-step control, with integrated digital positioner or as electric actuator with process controller. The electric actuators with process controller come with a digital controller and are suitable for diverse control tasks.

Hand-operated actuators

These actuators are mounted onto Series 240 and 250 Valves, which are used as hand-operated control valves with 15 or 30 mm rated travels (▶ T 8312). Hand-operated actuators for larger travels are available on request (Type 3273-5/-6).

2 Valve accessories

2.1 Positioners

Principle of operation

Positioners ensure a predetermined assignment of the valve position (controlled variable x) to the input signal (reference variable w). They compare the control signal issued by pneumatic or electric automation equipment (controller, control station, process control system) to the position or opening angle of the control valve and supply a corresponding output signal pressure (p_{st}, output variable y). Positioners are often used as servo-booster as they convert low-energy signals into strong proportional signal pressures up to the maximum supply pressure (6 bar/90 psi). They can be used in standard and split-range operation.

Pneumatic and electropneumatic positioners

Depending on the input signal, a distinction is made between pneumatic (p/p) and electropneumatic (i/p) positioners:

- Pneumatic (p/p) positioners:

  Pneumatic positioners accept an input signal of 0.2 to 1 bar (3 to 15 psi) and issue an output signal pressure (p_{st}) of maximum 6 bar (90 psi).
- Electropneumatic (i/p) positioners:
  Electropneumatic positioners use an analog DC signal of 0/4 to 20 mA or 1 to 5 mA as the input variable and issue an output signal pressure (pst) up to 6 bar (90 psi).

Digital/smart positioners

SAMSON digital/smart positioners are single-acting or double-acting positioners for attachment to pneumatic linear or rotary actuators.

Due to their digital signal processing technology, these positioners have the following advantages over conventional positioners:

- Easy operation
- LCD with rotatable reading direction
- Automatic zero and span calibration during initialization (except for Type 3730-0)
- Automatic detection of faults in the actuator
- Direction of action independent of mounting position
- Continuous zero monitoring
- Low air consumption
- All parameters saved in non-volatile EEPROM

Digital/smart positioners can be fitted with additional functions:

- Inductive limit contacts
- Solenoid valve
- Position transmitter
- External position sensor
- Analog input
- Binary input/binary output
- Forced venting
- Leakage sensor

2.2 Limit switches

Limit switches issue a signal when an adjusted limit is exceeded or not reached. This signal is suitable for initiating visual or audible alarms as well as actuating valves or other switching units. Moreover, the limit switches can be connected to central control or alarm systems.

The installed limit contacts are either:

- Inductive
- Electric
- Pneumatic

It is possible to override the limit contacts. They can be adjusted to be either an NC or NO contact. A maximum of three contacts can be used in limit switches.

They can be attached to control valves with linear actuators or directly to rotary actuator as well as pneumatic and electropneumatic positioners. The limit switch is linked axially over the shaft of rotary actuators or linked over a lever to linear actuators.

An optional solenoid valve allows the monitored actuator also to be controlled.

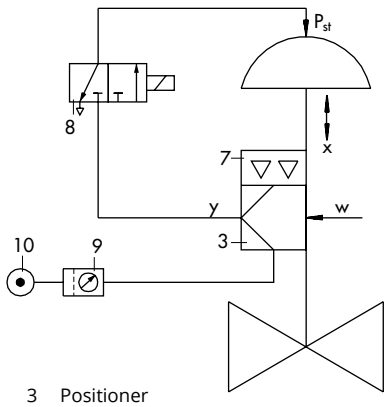

3 Positioner
7 Limit switch
8 Solenoid valve
9 Supply pressure regulator
10 Supply air
w Set point
x Controlled variable
y Manipulated variable

Hook-up of a pneumatic actuator with positioner, limit switch and solenoid valve

2.3 Solenoid valves

Solenoid valves convert binary signals issued by electric control equipment into binary pneumatic control signals which close or open the control valve.

The principle of operation is similar to an electropneumatic converter unit (e/p converter) and a valve configuration corresponding with the valve's switching function. Intrinsically safe, low-power binary signals issued by automation equipment or fieldbus systems can be used for controlling purposes.

Depending on the solenoid valve version, 3/2-way, 5/2-way, 5/3-way or 6/2-way functions can be implemented. Different flow rates and connection types allow the solenoid valve to be tailor-made for the various tasks.

2.4 Pneumatic lock-up valves

Pneumatic lock-up valves shut off the signal pressure line either when the air supply falls below an adjusted value or upon complete air supply failure. As a result, the pressure in the actuator is blocked. The actuator remains in its last position until the defect is eliminated.

2.5 Pneumatic remote adjuster

The remote adjuster is a precision pressure regulator which can be adjusted manually. It is designed for use in pneumatic control loops as either a set point adjuster or manual remote adjuster and can be used as an adjustable precision pressure regulator for measuring, calibration and testing equipment.

2.6 Supply pressure regulators

Supply pressure regulators provide pneumatic control instruments with a constant air supply. The supply pressure regulator reduces and controls the pressure of a compressed air network to the pressure adjusted at the set point adjuster.

Versions are available for installation in pipelines or control panels or for direct attachment to positioners or pneumatic actuators.

The air pressure reducing station consists of a supply pressure regulator and an upstream filter with condensate drain.

2.7 Filter regulators

The filter regulator is used to supply compressed air to pneumatic volume boosters for large actuators. It cleans the compressed air, removing any dirt particles, water and oil. In addition, it regulates the air pressure to a constant output pressure.

2.8 Service unit for purifying and controlling compressed air

The service unit is used to supply compressed air to pneumatic transmitters, controllers and positioners. It cleans the compressed air, removing any dirt particles, water and oil. In addition, it regulates the air pressure to a constant output pressure.

2.9 Reversing amplifiers

The reversing amplifier allows double-acting pneumatic actuators to be operated using single-acting pneumatic/electropneumatic positioners or limit switches.

The positioner creates an output signal pressure Y_1, to which the air pressure Y_2 is added.

The reversing amplifier uses the supply pressure Z as auxiliary power. The following rule applies:

$Y_1 + Y_2 = Z$

2.10 Pneumatic volume boosters

Volume boosters are used together with positioners to increase the positioning speeds of pneumatic actuators. The pneumatic booster supplies the actuator with an air flow output whose pressure corresponds exactly to the signal pressure, except that it has a much higher volume output.

2.11 Quick exhaust valves

The quick exhaust valves are mounted between the positioner or solenoid valve and the actuator. They are used to vent the actuator more quickly.

3 Self-operated regulators

General

Self-operated pressure regulators are control devices whose measuring units draw their energy from the process medium which creates sufficient force to move the final control element (plug with plug stem).

3.1 Pressure regulators

Principle of operation

The regulators consist of a valve and an actuator, which either opens or closes the valve when the pressure increases. The regulators are proportional regulators controlled by the process medium. Each deviation from the adjusted set point is assigned a certain valve plug position.

Pressure reducing valves

Pressure reducing valves or pressure reducing stations withdraw as much energy from a pressure vessel with a higher pressure level as needed to maintain a nearly constant pressure level in downstream equipment, although consumption fluctuates.

The pressure p_2 to be controlled (controlled variable x) produces the force $F_m = p_2 \times A$, which is proportional to the controlled variable, on the diaphragm area A. This force corresponds to the actual value and is compared at the plug stem with the spring force F_S= set point w. F_S is adjustable at the set point adjuster. If the pressure p_2 changes and in this way also the force F_m, the valve plug is being adjusted until $F_m = F_S$.

In the version illustrated, the valve closes when the pressure to be maintained constant rises. The regulator, in this case a pressure reducing valve, regulates the pressure p_2 downstream of the valve to the value adjusted at the set point adjuster.

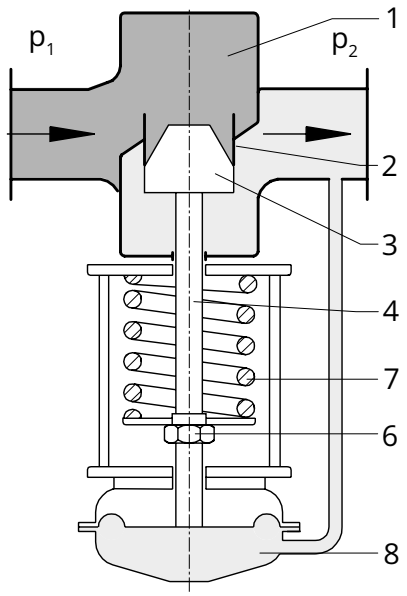

1 Valve body
2 Valve seat
3 Plug
4 Plug stem
6 Set point adjuster
7 Set point spring
8 Actuator

Pressure reducing valve closed ($p_2 > p_1$)

Excess pressure valves

The pressure p_1 to be controlled (controlled variable x) is picked up in the valve body and applied to one side of the actuator diaphragm. The force of the actuator $F_m = p_1 \times A$ is compared over the plug stem to the force F_S = set point w of the set point spring. In steady state (x = w) F_m is equal to F_S. If the pressure p_1 increases, the actuator force increases and the travel of the plug increases against the force of the set point spring. This causes the outlet flow to increase and the pressure p_1 to decrease until a new equilibrium is reached between actuator and spring force.

In the version illustrated, the valve opens when the pressure to be maintained constant rises. The regulator, in this case an excess pressure valve, regulates the pressure p_1 upstream of the valve to the value adjusted at the set point adjuster.

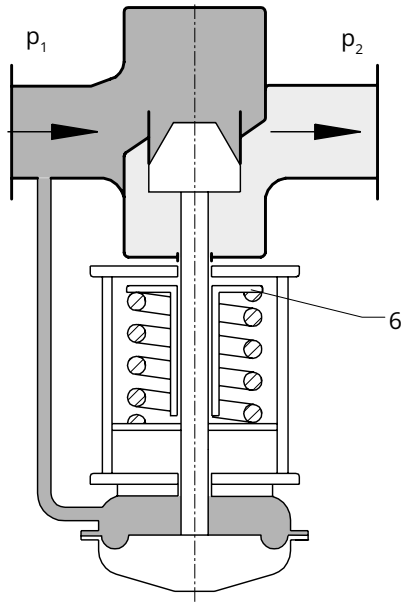

6 Set point adjuster

Excess pressure valve closed ($p_1 < p_2$)

3.1.1 Details concerning pressure regulators

Pressure balancing

The control accuracy (offset) and stability of the control process depend on the disturbances occurring in the loop (for example, changes in upstream pressure and flow rate). The regulators are designed in such a way that the effect of these disturbances is relatively small. The force acting on the valve plug depending on, for example either the upstream or differential pressure can be eliminated by balancing the plug correspondingly. In unbalanced valves, the effect on the plug is a force resulting from the cross-sectional seat area and the differential pressure ($\Delta p = p_1 - p_2$). In regulators with pressure-balanced plugs, this effect is largely neutralized. This version is, therefore, suitable for handling large pressure drops. The drawing shows a plug balanced by a piston.

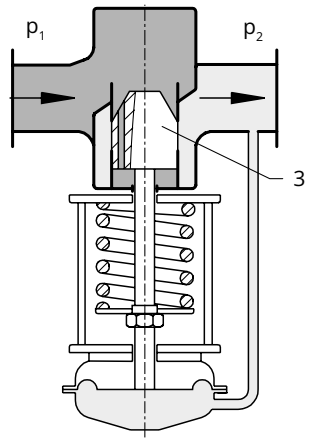

3 Plug balanced by a piston

Pressure balancing

Upstream/downstream pressure balancing

In the regulator (left), the metal bellows balances the upstream pressure and provides an absolutely tight and frictionless plug stem seal.

The right drawing shows a bellows arrangement for upstream and downstream pressure balancing.

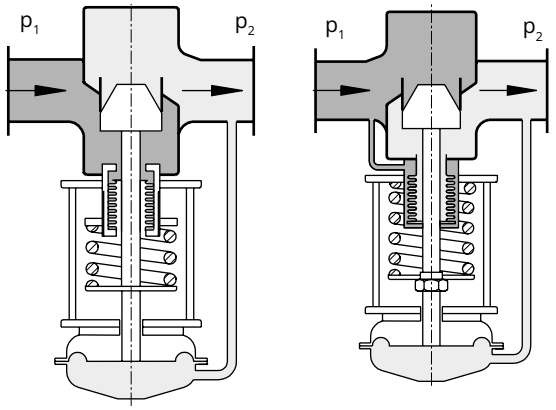

Left: upstream pressure balancing and plug stem seal by a metal bellows
Right: Upstream/downstream pressure balancing by a metal bellows

Low-noise operation with a flow divider

All regulators come with low-noise valve plugs. The valves used in the Type 41-23, Type 2422/2424, Type 41-73 and Type 2422/2425 Regulators can be equipped with a flow divider in special versions. Flow dividers are effective and reliable components used to reduce the noise level or to avoid critical conditions inside the valve. The maximum flow rate is restricted on using a flow divider.

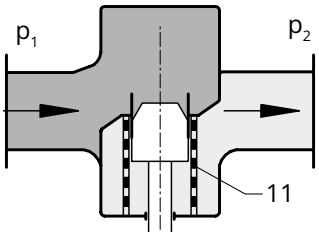

11 Flow divider

Valve with flow divider

For noise calculation according to VDMA 24422, the correction terms ΔL_G for gases and vapors as well as ΔL_F for liquids are required on using flow dividers. Refer to the associated data sheet of the pressure regulator for more details.

Steam pressure control

In a steam pressure control application, a compensation chamber is installed at the point of measurement. It allows steam to condense and protects the connected diaphragm system against high temperatures. Since the steam volume increases as the steam pressure decreases, it is often necessary to enlarge the piping diameter downstream of the regulator by installing a conical expansion piece. This expansion piece (accessories) can double the nominal outlet diameter of the pipeline (e.g. DN 100 to 200).

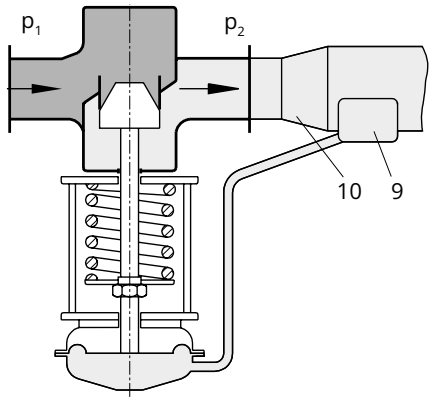

9 Compensation chamber
10 Conical expansion piece

Steam pressure control

3.1.2 Regulators and equipment for safety requirements

Safety shut-off valves (SSV) and safety excess pressure valves (SEV)

These regulators meet enhanced safety requirements.

- Low-maintenance proportional regulators requiring no auxiliary energy
- Especially suitable for applications in district heating plants designed in accordance with DIN 4747-1. The regulators comply with AGFW (German District Heating Association) regulations for regulators with backup diaphragm.

Backup diaphragm

The regulators are equipped with two operating diaphragms. In case the actual operating diaphragm ruptures, the backup diaphragm ensures emergency operation or the regulator moves to the fail-safe position. To monitor the diaphragm condition, the intermediate ring is equipped with a visual diaphragm rupture indicator or a pressure switch can be optionally used to indicate the condition.

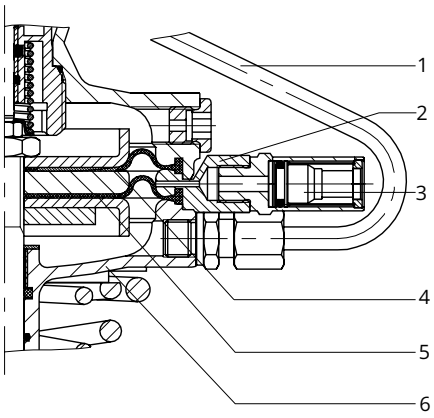

1 Control line (turned into the plane of projection)
2 Distance ring
3 Diaphragm rupture indicator
4 Backup diaphragm
5 Operating diaphragm
6 Actuator (housing)

Version with backup diaphragm

Pressure regulators with pilot valves

Regardless of whether a pressure reducing valve or excess pressure valve is used, the upstream pressure p_1 is transmitted to the pilot valve as auxiliary energy.

The pilot valve regulates the pressure to create a control pressure p_S dependent on the set point adjustment, which is compared to the pressure to be controlled acting from the top of the operating diaphragm.

- Pilot operated by the process medium
- Convenient set point adjustment at the pilot valve
- High dynamic response and small system deviation, i.e. excellent control accuracy

3.2 Differential pressure and flow regulators (Series 42)

SAMSON differential pressure and flow regulators are suitable for industrial, public and domestic applications, especially for district heating supply systems, for heating, ventilation and air-conditioning systems, for steam and heat generators, heat exchangers, energy supply units in power plants and chemical plants as well as for large pipeline systems.

- Low-noise, self-operated proportional regulators requiring little maintenance
- Body optionally available in cast iron, spheroidal graphite iron, cast steel, cast stainless steel or forged steel
- Suitable for water, steam, air and other liquids or gases, provided they do not influence the properties of the operating diaphragm
- Special version for mineral oils/heat transfer oils
- Flanges

Regulators and their control methods

The Series 42 Self-operated Differential Pressure and Flow Regulators consist of a valve with flanges and an actuator, which closes or opens the valve when the differential pressure/flow rate increases.

The medium flows through the valve in the direction indicated by the arrow. The areas released by the valve plug determine the differential pressure/flow rate.

In pressure-balanced regulators, the plug is largely unaffected by pressure changes in the medium. This is achieved by using either valves balanced by a bellows or a diaphragm. The valves balanced by a diaphragm have a balancing diaphragm instead of a balancing bellows. In both cases, the forces created by the upstream and downstream pressures that act on the plug are balanced out.

The actuators can be equipped with force limiters to limit the force acting on the plug stem and protect the seat and plug against damage.

A similar effect is achieved by an excess pressure limiter integrated into the actuator. A bypass opens, if necessary and balances the forces which prevents excessive positioning forces.

Flow control

The flow rate is determined according to the differential pressure method. This is achieved by a standard orifice plate in the pipe through which the medium flows or by an adjustable restriction integrated into the valve.

The areas released by the restriction and the valve plug influence the flow rate. In this case, the high pressure upstream of the restriction is transferred through the control line to the high-pressure side of the diaphragm, whereas the low pressure downstream of the restriction is transferred through a bore in the valve plug to the low-pressure side of the diaphragm.

If the pressure difference acting on the operating diaphragm exceeds the differential pressure set point of the set point spring, i.e. the flow rate increases, the diaphragm moves
together with the plug stem and the plug. The cross-sectional area of flow is reduced until the pressure drop created above the restriction and the differential pressure created to measure flow are identical.

Combined regulators applicable for differential pressure/pressure and flow control as well as regulators suitable for one or more of these control tasks are commonly used.

Design · Principle of operation and application

Self-operated differential pressure and flow regulators are medium-controlled proportional regulators. Each deviation from the adjusted set point is assigned a certain plug position.

The medium to be controlled delivers the necessary energy to adjust the valve. The released force moves the plug when the set point differs from the actual value.

The differential pressure Δp to be controlled generates a force F_m at the diaphragm surface of the actuator which is proportional to the actual value (controlled variable x). This force is compared to the spring force F_S (set point w) at the plug stem. It can be adjusted at the set point adjuster. The spring force corresponds to the set point and can be adjusted at the set point adjuster. When the differential pressure Δp and thus the force F_m change, the plug stem is moved until $F_m = F_S$. With a predetermined diaphragm area A, the spring rate of the set point spring determines the rated travel and thus also the proportional-action coefficient K_p and the proportional band x_p.

The flow rate is controlled according to the differential pressure method.

The control accuracy and stability depend on the disturbances that occur. The regulators are designed in such a way that the effect of these disturbances is relatively small. Amongst other things, this is also achieved by balancing the plug with a metal bellows. As a result, the force acting on the plug, which depends on the upstream or differential pressure, is eliminated by an equal opposing force. In unbalanced versions, the disturbance effect is a force resulting from the cross-section of the seat and the differential pressure.

The regulators can be designed to function as:

- Differential pressure regulators
- Flow regulators
- Differential pressure and flow regulators
- Differential pressure and flow limiters
- Differential pressure, flow and temperature regulators
- Combined self-operated regulator for flow rate with additional electric actuator

Legend for the following diagrams

1 Valve body
2 Seat
3 Plug
4 Plug stem
5 Balancing bellows or diaphragm
6 Set point adjustment
7 Set point spring
8 Actuator
11 Adjustable orifice

Differential pressure regulators with closing actuator

This actuator closes the valve when the adjusted differential pressure set point is exceeded. The top of the diagram shows a closing actuator with an adjustable set point, the bottom an actuator with a fixed set point.

Actuators with a fixed set point determined by the set point spring are appropriately suitable for closed loops with a constant set point.

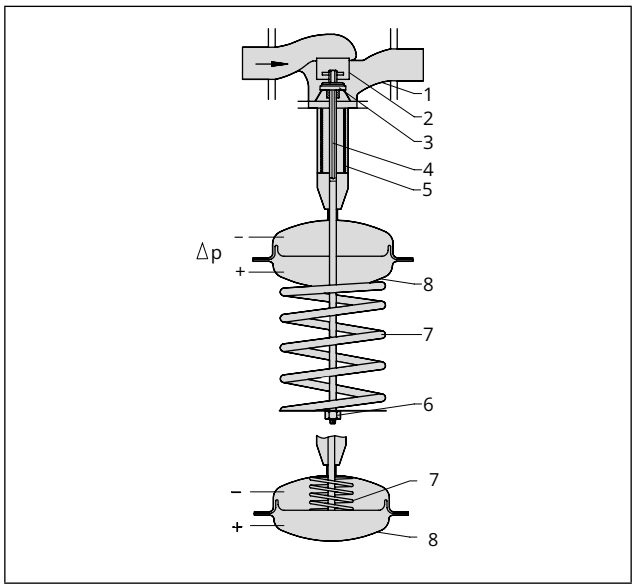

Differential pressure regulator with opening actuator

This actuator opens the valve when the differential pressure rises. The valve is closed when relieved of pressure (Δp = 0).

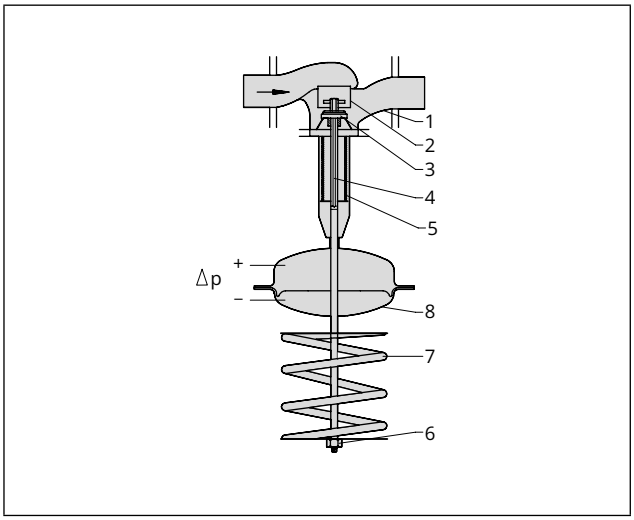

Valve with bellows seal

The downstream pressure acts on the inside bellows surface, while the upstream pressure acts on the outside bellows surface. As a result, the forces acting on the plug are balanced, the plug is fully balanced and not affected by any pressure or flow rate changes in the process medium.

The fully balanced valves in the Series 42 Regulators allow these regulators to be used for nominal sizes up to DN 250 and flow rates up to 520 m³/h.

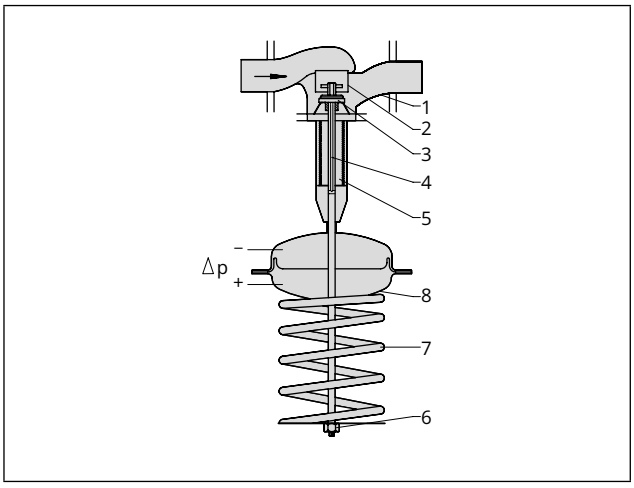

Flow regulators

Flow regulators are particularly suitable for district heating supply networks. The measuring system is designed for a fixed differential pressure at the restriction of, for example 0.2 bar.

The set point is adjusted at the restriction. As a result, the regulator operates with an **adjustable orifice bore**, i.e. with an opening ratio which is adapted to the set point.

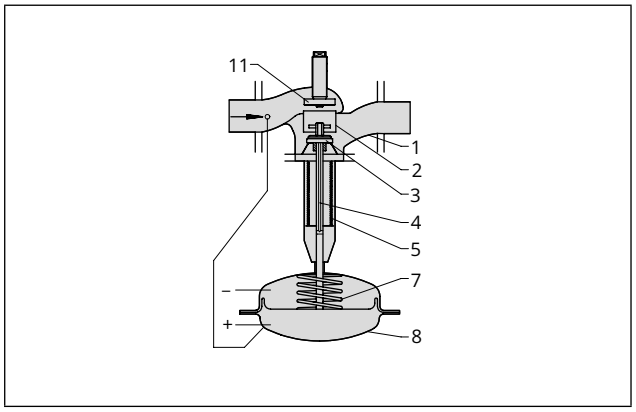

Principle of flow control according to the differential pressure method

The differential pressure $\Delta p_{restriction}$ generated across the restriction is transferred to the diaphragm surface of the actuator. The difference between the force at the diaphragm and the spring force of the set point spring causes the plug position to change.

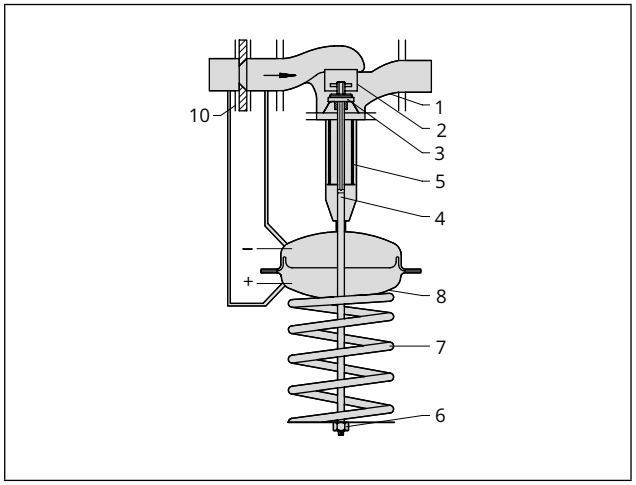

For the flow rate, the differential pressure $\Delta p_{restriction}$ acting on the restriction and the force F_m acting on the diaphragm, the following applies:

$$\dot{V} = K \cdot \sqrt{\Delta p_{restriction}} \mathrel{\hat{=}} K \cdot \sqrt{F_m} \text{ or } \dot{V}^2 = K' \cdot \Delta p \mathrel{\hat{=}} K' \cdot F_m$$

$$\Delta p_{restriction} = \frac{F_m}{A}$$

$\dot{V}$	=	Flow rate
F_m	=	Force acting on the diaphragm surface
$\Delta p_{restriction}$	=	Differential pressure created at the restriction for measuring the flow rate
K, K´	=	Constants
A	=	Diaphragm area

Flow and differential pressure or pressure regulators

These regulators are equipped with two diaphragms. The top diaphragm is used to control the flow rate, the bottom diaphragm is used to control the differential pressure or pressure. The largest signal is always used to control the regulator.

Depending on the intended application, these regulators are equipped with the necessary control lines.

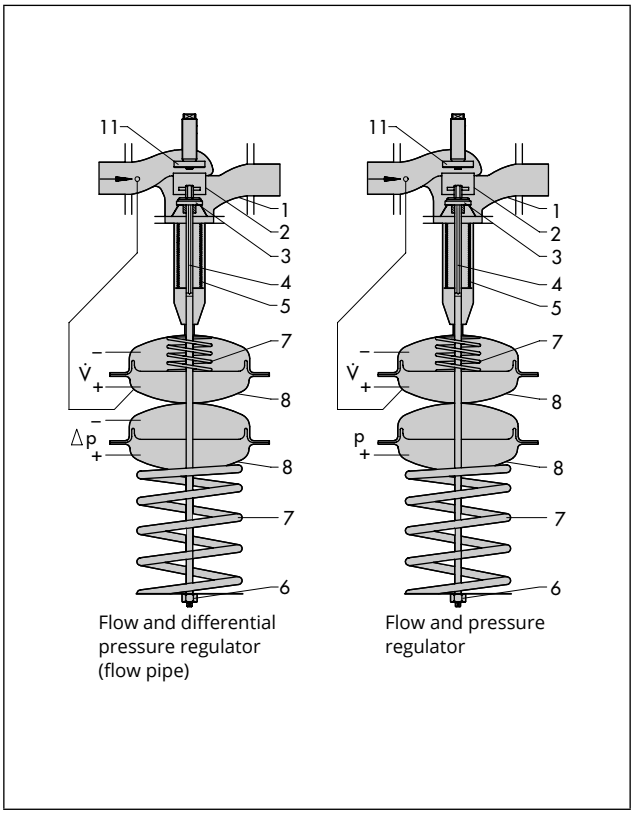

Flow and differential pressure regulator (flow pipe)

Flow and pressure regulator

3.3 Temperature regulators (Type 1 to Type 9)

Principle of operation

The temperature regulators shown in the schematic diagrams operate according to the liquid expansion principle. They consist of a valve and a control thermostat.

The control thermostat comprises a temperature sensor (11), set point adjuster (13), capillary tube (10) and a hydraulic actuator termed the operating element (7). The sensor is filled with an expansion liquid, which acts over the positioning bellows (9) and the positioning pin (8) upon the valve plug (3) attached to the plug stem (6). The temperature-dependent change in volume of the liquid contained in the sensor and the displacement of the piston (12) located in the set point adjuster cause the bellows and the plug to move.

The hydraulic actuator and the valve, which does not contain a packing, ensure high operating reliability of the regulators. Since the regulators operate on the liquid expansion principle, the temperature sensor and the control thermostat can be adapted to different operating conditions. Therefore, the easy-to-install version (top and middle diagrams) and the version in bottom diagram are used in most cases for temperatures exceeding 150 °C (300 °F) and in applications where separate installation of the sensor and the set point adjuster is appropriate. The selection of a Type 2231 to 2234 Temperature Sensor depends on the medium, required time constant and installation situation.

The regulators are proportional regulators controlled by the process medium. Each deviation from the adjusted set point is assigned a certain valve plug position. The control accuracy and stability of the control process depend on the disturbances occurring in the loop (for example, changes in upstream pressure and flow rate). The regulators are designed in such a way that the effect of these disturbances is relatively small. The force acting on the valve plug depending on, for example either the upstream or differential pressure can be eliminated by balancing the plug correspondingly.

In unbalanced valves (top diagram), the effect on the plug is a force resulting from the cross-sectional seat area and the differential pressure.

In versions balanced by a bellows, the upstream pressure p_1 is transferred through a hole in the plug stem and acts on the outside of the balancing bellows, whereas the pressure downstream of the plug p_2 acts on the inside of the bellows. As a result, the forces acting on the valve plug are balanced out. The fully balanced valves allow the self-operated regulators to be used for nominal sizes up to DN 250 (valves up to NPS 10 on request).

A balancing diaphragm can be used instead of the balancing bellows for non-flammable gases (max. 80 °C/175 °F) and water (max. 150 °C/300 °F) for globe valves in nominal sizes DN 65 to 150 (NPS 2½ to 6). The maximum permissible differential pressure of some valves balanced by a diaphragm is lower than valves balanced by a bellows. However, these valves are more compact and more cost effective.

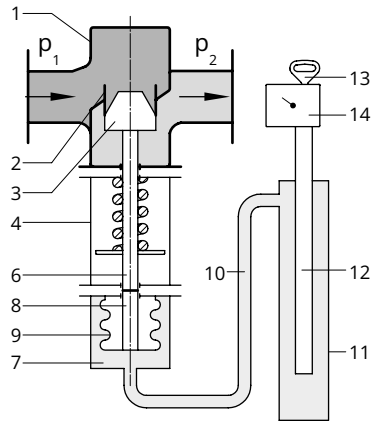

Temperature regulator with unbalanced valve and compact thermostat (without pressure balancing)

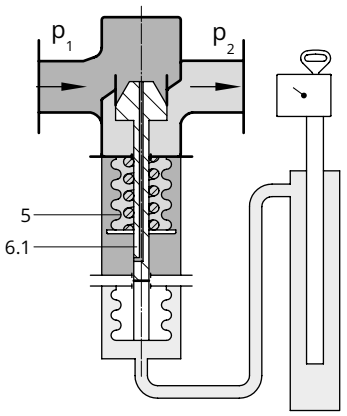

Temperature regulator with balanced valve and compact thermostat (with balancing bellows)

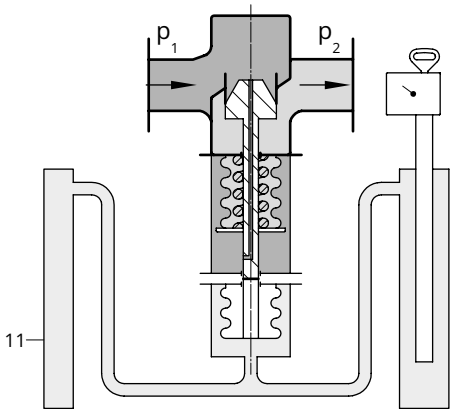

Temperature regulator with balanced valve and a thermostat with separate set point adjustment (with balancing bellows)

Valve

1 Valve body
2 Seat
3 Plug
4 Bellows housing
5 Balancing bellows
6 Plug stem
6.1 Plug stem with hole for pressure balancing

Control thermostat

7 Operating element
8 Positioning pin
9 Operating bellows
10 Capillary tube
11 Temperature sensor
12 Piston
13 Set point adjustment
14 Set point dial

Dynamic behavior of the thermostats

The dynamics of the regulators are mainly determined by the response of the sensor and its characteristic time constant.

The following table lists the response times of SAMSON thermostats operating according to different principles measured in water for Type 1 to Type 9 Temperature Regulators.

Principle of operation	Control thermostat	Time constant [s]	
		Without Thermowell	With Thermowell
Liquid expansion	Type 2231	70	120
	Type 2232	65	110
	Type 2234	15	– [1]
	Type 2213	70	120
Adsorption	Type 2212	– [1]	40

[1] Not permissible

3.4 Temperature regulators (Series 43)

Principle of operation

The regulators illustrated consist of a valve (1) and a control thermostat with set point adjuster (8), capillary tube (10) and temperature sensor (11) operating according to the adsorption principle.

The medium temperature creates the pressure p_t in the sensor (11) that corresponds to the actual value. This pressure is transferred over the capillary tube (10) to the positioning bellows (9) where the force $F_t = p_t \times A$ is created at the effective bellows area A. This force that corresponds to the controlled variable x is compared at the bottom of the bellows with the spring force F_s (= set point w) dependent on the set point adjustment.

When the temperature changes, the plug (3) moves until $F_t = F_s$.

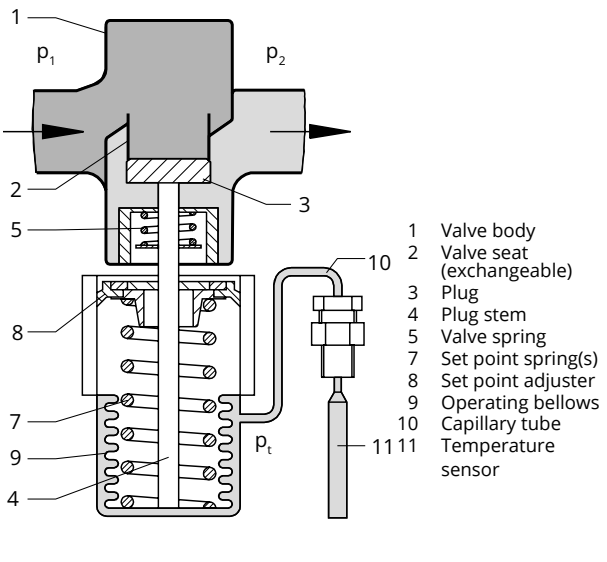

Pressure balancing

The control accuracy and stability of the control process depend on the disturbances occurring in the loop (for example, changes in upstream pressure and flow rate). The regulators are designed in such a way that the effect of these disturbances is relatively small. The force acting on the valve plug depending on, for example the upstream pressure, can be eliminated by balancing the plug correspondingly.

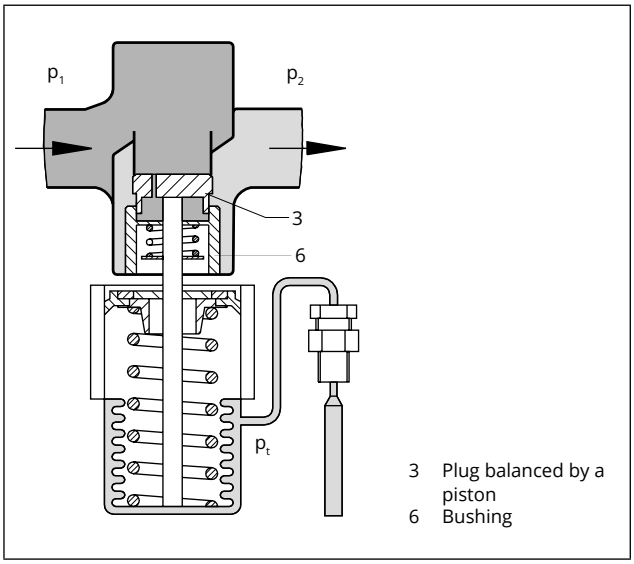

The valve plug has a hole through it to allow the upstream pressure to be applied to the front and back of the plug. The downstream pressure is separated from the plug either by the bushing of a piston plug or a metal bellows.

Regulators for plants to be heated

The valve **closes** as soon as the temperature at the sensor rises.

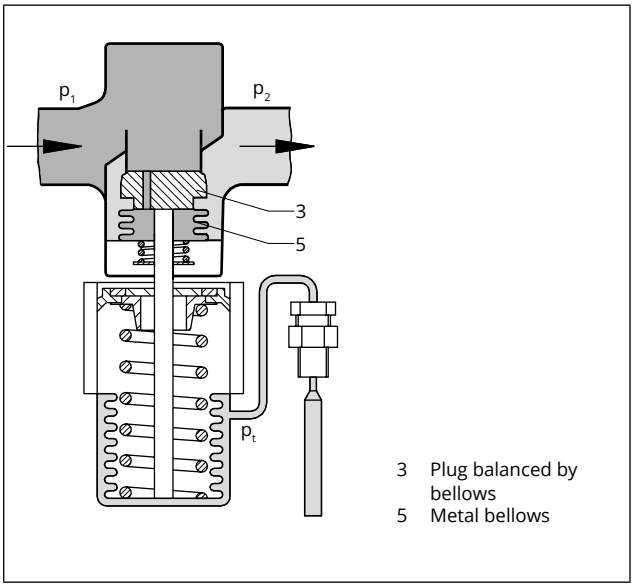

Regulators for plants to be cooled

The valve **opens** as soon as the temperature at the sensor rises.

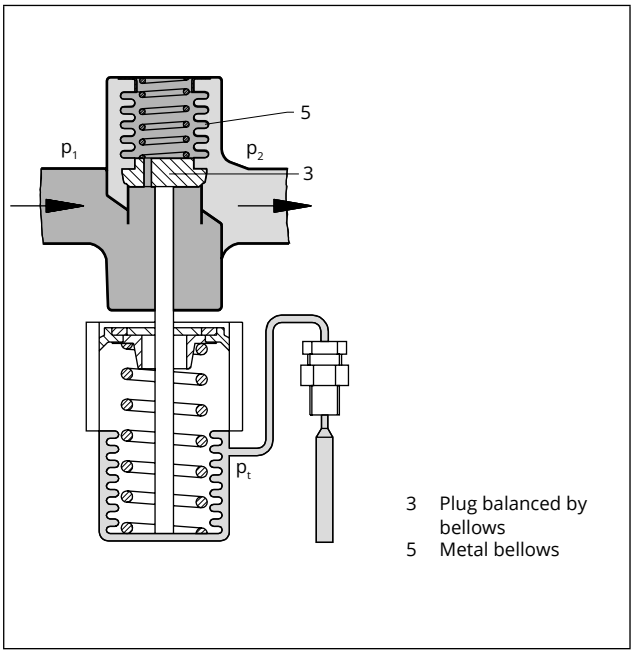

Product Range

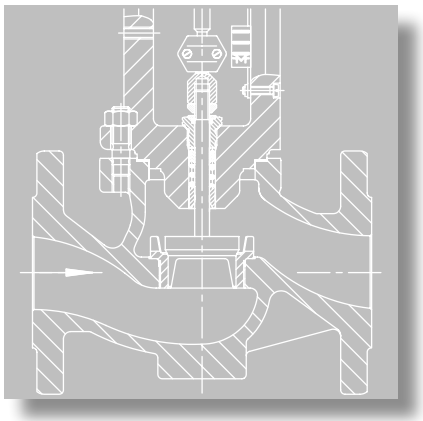
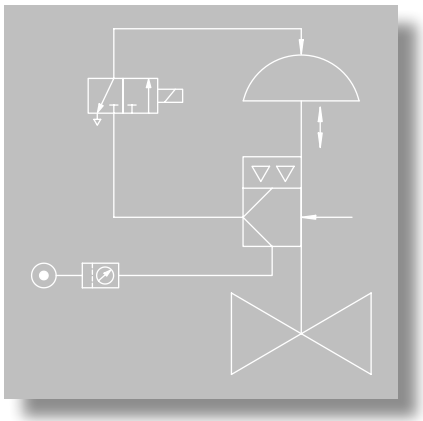
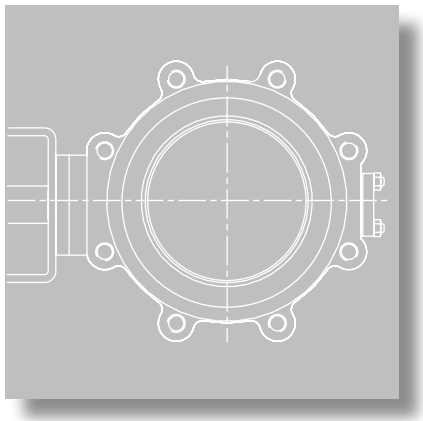
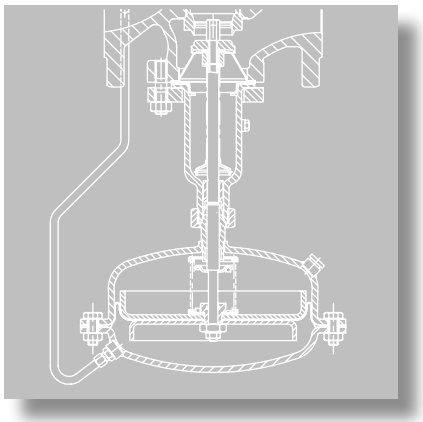
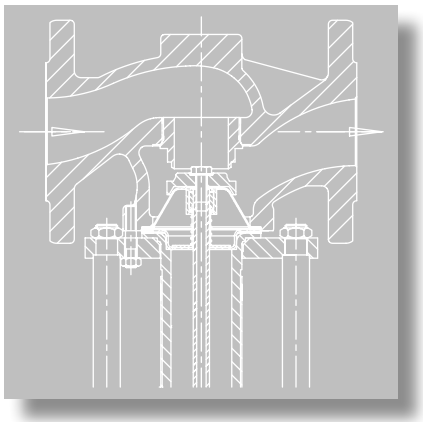
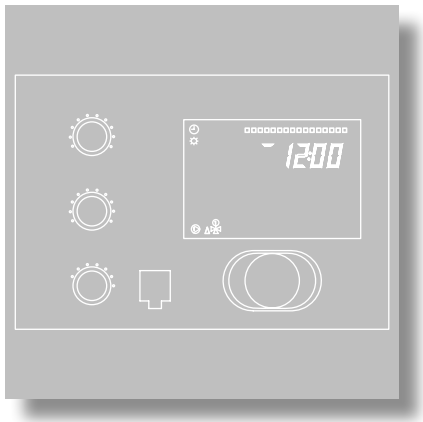

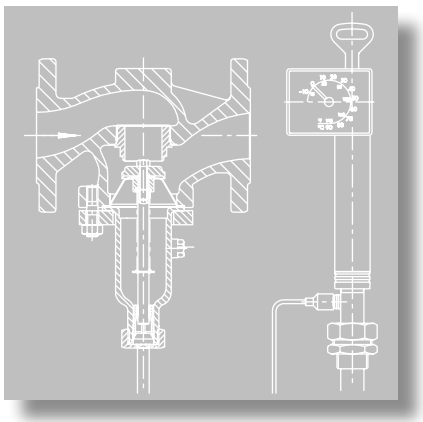
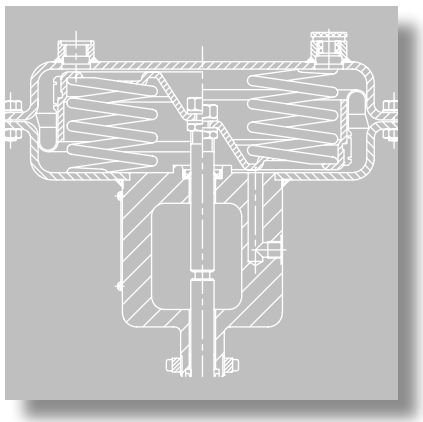
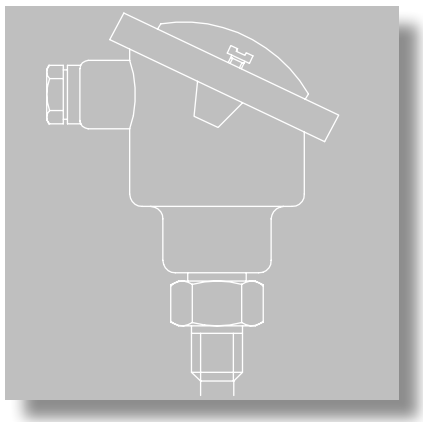

Application

Control valves for process engineering and industrial applications according to DIN, ANSI and JIS standards

- Nominal size DN 15 to 300 · NPS ½ to 12 · DN 15A to 300A
- Pressure rating PN 10 to 40 · Class 125 to 300 · JIS 10K/20K
- Temperatures from -196 to +450 °C (-325 to +842 °F)

Special features

- Globe valve with pneumatic or electric actuator
- Valve body optionally made of cast iron, spheroidal graphite iron, cast steel, forged steel, cold-resisting and high-alloy steels or special materials
- Valve plug with metal seal, soft seal or high-performance metal seal
- Optional with RFID tags with unique identification according to DIN SPEC 91406

Versions

– **Type 3241-7:** Valve with Type 3277 Pneumatic Actuator (see page 96)
– **Type 3241-1:** Valve with Type 3271 Pneumatic Actuator (see page 96)

Technical data

Nominal size		**DN 15 to 250**	**DN 15 to 150**	**DN 15 to 300**			
		NPS 1 to 10	**NPS ½ to 2**	**NPS ½ to 12**			
Body material	DIN	Cast iron EN-GJL-250 (EN-JL1040)	Sph. graphite iron EN-GJS-400-18-LT (EN-JS1049)	Cast steel 1.0619	Cast stainless steel 1.4408	Cast steel 1.6220/ 1.1138	Cast stainless steel 1.4308
	ANSI	A126 B		A216 WCC	A351 CF8M	A352 LCC	A351 CF8
Pressure rating	PN	10, 16	16, 25	10, 16, 25, 40			
	Class	125	250	150/300			
Connection	DIN	Flanges					
		–		Welding ends according to DIN EN 12627 only for DN 25, 40, 50, 80, 100, 150, 200, 250, 300			
	ANSI	Flanges FF	–	Flanges RF			
		–	–	Welding ends ASME B16.25			
		–	NPT thread	–			
Seat-plug seal		Soft seal, metal seal or high-performance metal seal					
Characteristic		Equal percentage, linear					
Rangeability		50:1 up to DN 50, 30:1 for DN 65 and larger, 50:1 for DN 200 and larger 50:1 up to NPS 2, 30:1 for NPS 2½ and larger, 50:1 for NPS 8 and larger					
Temperature range (body)		-10 to +220 °C (14 to 428 °F) With high-temperature packing, DN 200 to 300: -10 to +350 °C, NPS 8 to 12: 14 to 662 °F (see data sheets for further temperatures)					
Conformity		CE					
Data sheets		▶ T **8015 (DIN),** ▶ **T 8012 (ANSI),** actuators: ▶ **T 8310-1/-2/-3**					



Type 3241-7 up to DN 150 with Type 3277 Actuator



Type 3241-7 up to DN 80 with Type 3277 Actuator



Type 3241-1 with Type 3271 Actuator

Nominal size		DN 15, 25, 40, 50, 80	
		NPS ½, 1, 1½, 2, 3	
Body material	DIN	Forged steel 1.0460 [1)]	Forged stainless steel 1.4404 [1)]
	ANSI	A105	A182 F316
Pressure rating	PN	10, 16, 25, 40	
	Class	300	
Connection	DIN	Flanges	
	ANSI	Flanges RF	
Seat-plug seal		Soft seal, metal seal or high-performance metal seal	
Characteristic		Equal percentage, linear	
Rangeability		50:1 up to DN 50, 30:1 for DN 65 and larger, 50:1 for DN 200 and larger 50:1 up to NPS 2, 30:1 for NPS 2½ and larger, 50:1 for NPS 8 and larger	
Temperature range (body)		-10 to +220 °C (14 to 430 °F) With high-temperature packing, DN 200 to 300: -10 to +350 °C, NPS 8 to 12: 14 to 662 °F (see data sheets for further temperatures)	
Conformity		CE	
Data sheets		▶ **T 8015 (DIN),** ▶ **T 8012 (ANSI),** actuators: ▶ **T 8310-1/-2/-3**	

Accessories

– Positioners, limit switches, solenoid valves

Further versions:

– With welding ends for versions according to DIN and ANSI
– With adjustable packing
– With flow divider or AC-trim for noise reduction (▶ **T 8081** and ▶ **T 8082**)
– With insulating section or bellows seal (▶ **T 8015** and ▶ **T 8012**)
– With heating jacket (on request)
– With stainless steel actuator (▶ **T 8310-1**)
– With additional handwheel (▶ **T 8310-1** and ▶ **T 8312**)
– With electric actuator for plant engineering and HVAC (▶ **T 5870** and ▶ **T 5871**)

Valves for special applications

Type 3241-1 and Type 3241-7: with safety function for water and steam

Type 3241-4: with safety function to protect heating systems against excess temperatures or pressures · Tested according to DIN EN 14597 (▶ **T 5871**)

Type 3241-1 Gas and Type 3241-7 Gas: pneumatic control and quick-acting shut-off valves for gases · Typetested according to DIN EN 161 (▶ **T 8020-2**)



Type 3241-7 with Type 3277 Actuator and heating jacket including bellows heating



Type 3241-4 with Type 3374 Actuator

Valves for higher pressures

Series 250 according to DIN and ANSI (see page 48)
Pressure rating up to PN 400 (Class 2500) · Valve size up to DN 500 (NPS 20)
Temperatures up to 550 °C (1022 °F) (▶ **T 8051,** ▶ **T 8052,** ▶ **T 8053,** ▶ **T 8055,** ▶ **T 8056,** ▶ **T 8059**)

Steam conditioning valves

Series 280 according to DIN and ANSI (see page 55)
Pressure rating up to PN 160 (Class 600) · Valve size up to DN 500 (NPS 20)
Temperatures up to 500 °C (930 °F) (▶ **T 8251** and ▶ **T 8256**)



Type 3241-7 with Type 3277 Actuator and heating jacket including bellows heating



Type 3241-4 with Type 3374 Actuator

Application

Mixing or diverting valve for process engineering and industrial applications according to DIN, ANSI and JIS standards

- Nominal size DN 15 to 150 · NPS ½ to 6
- Pressure rating PN 10 to 40 · Class 150 to 300
- Temperatures from -196 to +450 °C (-325 to +842 °F)

Special features

- Three-way valve with pneumatic or electric actuator
- Valve body optionally made of cast iron (DIN version only), cast steel or cast stainless steel
- Metal-seated valve plug
- Optional with RFID tags with unique identification according to DIN SPEC 91406

Versions

Standard version for temperatures ranging from -10 to +220 °C

– **Type 3244-7:** Valve with Type 3277 Pneumatic Actuator (see page 96)
– **Type 3244-1:** Valve with Type 3271 Pneumatic Actuator (see page 96)

Technical data

Nominal size		**DN 15 to 150**		
		NPS ½ to 6		
Body material	DIN	Cast iron EN-GJL-250 (EN-JL1040)	Cast steel 1.0619	Cast stainless steel 1.4408
	ANSI	–	A216 WCC	A351 CF8M
Pressure rating	PN	10, 16, 25, 40		
	Class	–	150/300	
Connection	DIN	Flanges according to DIN EN 1092-1/-2		
	ANSI	Flanges RF		
Seat-plug seal		Metal seal		
Leakage class		I (0.005 % K_{VS}) acc. to DIN EN 60534-4/ANSI/FCI 70-2		
Characteristic		Linear		
Rangeability		50:1 up to DN 50, 30:1 for DN 65 and larger 50:1 up to NPS 2, 30:1 for NPS 2½ and larger		
Temperature range		-10 to +220 °C (15 to 430 °F)		
With insulating section (DIN)		-10 to +300 °C	-10 to +400 °C	-50 to +450 °C
With bellows seal (DIN)		-10 to +300 °C	-10 to +400 °C	-50 to +450 °C
With insulating section (ANSI)		–	-29 to +425 °C (-20 to 800 °F)	-50 to +450 °C (-58 to 842 °F)
With bellows seal (ANSI)		–	-29 to +400 °C	-50 to +450 °C
Conformity		CE		
Data sheets		Valve: ▶ **T 8026**, actuators: ▶ **T 8310-1**		

Accessories

– Positioners, limit switches, solenoid valves



Type 3244-7 with Type 3277 Actuator



Type 3244-1 with Type 3271 Actuator

Further versions

- With bellows seal or insulating section (▶ **T 8026**)
- With heating jacket (on request)
- With additional handwheel (▶ **T 8310-1** and ▶ **T 8312**)
- With electric actuator for plant engineering and HVAC



Type 3244-7 with Type 3277 Actuator



Type 3244-1 with Type 3271 Actuator

Pneumatic control valves

Micro-flow valve · Type 3510

High-pressure valve · Type 3252

Application
Control valve to control very low flow rates according to DIN and ANSI standards

Special features
- Globe or angle valve with pneumatic actuator
- Valve body and wetted parts made of stainless steel
- Metal-seated valve plug
- Connections: G/NPT thread, welding ends or flanges

Versions
– **Type 3510-7:** Micro-flow valve with Type 3277-5 Pneumatic Actuator
– **Type 3510-1:** Micro-flow valve with Type 3271-5 Pneumatic Actuator (120 cm²)
– **Type 3252-7:** High-pressure valve with Type 3277-5 Pneumatic Actuator (120 cm²) or Type 3277 Pneumatic Actuator (350 cm²)
– **Type 3252-1:** High-pressure valve with Type 3271-5 Pneumatic Actuator (120 cm²) or Type 3271 Pneumatic Actuator (350 cm²)

See page 96 for more details on Type 3271 and Type 3277 Pneumatic Actuators.

Technical data

		Type 3510	Type 3252
Nominal size	DN	10 to 25	15 to 25
	NPS	½ to 1	½ to 1
Female thread	G/NPT	⅛ to ¾	½ to 1
	Rc	⅛ to ¾	–
Flow coefficients	K_{VS}	0.0001 to 1.6 [1]	0.1 to 4.0
	C_V	0.00012 to 2.0 [1]	0.12 to 5.0
Standard body material	DIN	1.4404, 1.4404 [2], 1.4122, Stellite®	1.4404
	ANSI	316 L	316 L
Pressure rating	PN	40 to 400	40 to 400
	Class	150 to 2500	300 to 2500
Leakage class according to IEC 60534-4 or ANSI/FCI 70-2		Metal seal: IV High-performance metal seal: V	Metal seal: IV High-performance metal seal: V Soft seal: VI
Characteristic		Equal percentage for K_{VS} 0.01 and higher, linear, on/off	Equal percentage, linear, on/off
Rangeability		Max. 50:1	Max. 50:1
Temperature range		-10 to +220 °C (14 to 428 °F)	-10 to +220 °C (14 to 428 °F)
With long insulating section		-196 to +450 °C (-325 to +842 °F)	-196 to +450 °C (-325 to +842 °F)
With bellows seal		-	-50 to +450 °C (-58 to 842 °F)
Conformity		CE	
Data sheets		**▶ T 8091 (DIN)** **▶ T 8091-1 (ANSI)**	**▶ T 8053**

[1] Welding ends or flanges: <DN 15/½ NPS only up to 0.4/0.5
[2] Only with K_{VS} 0.001 to 1.6

Accessories
– Positioners, limit switches, solenoid valves



Type 3510-7 with Type 3725 Positioner (hardware version GI:00)



Type 3252-7 with Type 3767 Positioner

Application

Control valve for process engineering applications with high industrial requirements

- Nominal sizes NPS ½ to 8
- Pressure ratings Class 150 to 900
- Temperatures from -58 to +1022 °F

Special features

- Globe valve with pneumatic actuator
- Valve body optionally made of cast steel or cast stainless steel
- Valve plug with metal seal or high-performance metal seal
- Optional with RFID tags with unique identification according to DIN SPEC 91406



Type 251GR with Type 3271 Actuator

Technical data

			Type 251GR		
Body material			Cast steel	Cast steel	Cast stainless steel
		ANSI	A216 WCC	A217 WC6	A351 CF8M
		DIN	1.0619	1.7357	1.4408
Nominal size		NPS	NPS ½ to 8		
		DN	15 to 150		
Pressure rating		Class	150 to 900		
		PN	16 to 160		
Connection		ANSI	RF and RTJ flanges according to ASME B16.5 Welding ends according to ASME B16.25		
		DIN	B1 and B2 flanges according to DIN EN 1092 Welding ends according to DIN EN 12627		
Leakage class according to ANSI/FCI 70-2 or IEC 60534-4			Metal seal (standard): IV High performance metal seal: V Balanced, metal seal: with PTFE ring (standard) High performance metal seal: V		
Characteristic			Equal percentage, linear, modified linear, on/off		
Rangeability			50:1		
Temperature ranges					
Body	Without insulating section	ANSI	-20 to +482 °F (PTFE packing) -20 to +797 °F (graphite packing)		
		DIN	-29 to +250 °C (PTFE packing) -20 to +425 °C (graphite packing)		
	With insulating section	ANSI	-20 to +797 °F	-20 to +932 °F	-58 to +1022 °F
		DIN	-29 to +425 °C	-29 to +500 °C	-50 to +550 °C
	With bellows seal	ANSI	-20 to +797 °F	-20 to +932 °F	-58 to +797 °F
		DIN	-29 to +425 °C	-29 to +500 °C	-50 to +425 °C
Trim	Metal seal	ANSI	-58 to +1022 °F		
		DIN	-50 to +550 °C		
	Balanced with PTFE	ANSI	-58 to +482 °F		
		DIN	-50 to +250 °C		
	Balanced, metal seal	ANSI	Room temperature ...+1022 °F		
		DIN	Room temperature ...+550 °C		
Conformity			CE		
Data sheets			**▶ T 8004-GR (ANSI), ▶ T 8003-GR (DIN)**		

Pneumatic Control Valves · Series 250

Globe valve · Type 3251

Angle valve · Type 3256

Application

Control valve for process engineering applications with high industrial requirements according to DIN and ANSI standards

- Nominal size DN 15 to 500 · NPS ½ to 20
- Pressure rating PN 16 to 400 · Class 150 to 2500
- Temperatures from -196 to +550 °C (-325 to +1022 °F)

Special features

- Globe or angle valve with pneumatic actuator
- Optional with RFID tags with unique identification according to DIN SPEC 91406

Versions

Standard version for temperatures from -10 to +220 °C (14 to 428 °F), with adjustable high-temperature packing from -10 to +350 °C (15 to 662 °F)

– **Type 3251-1 or 3256-1:** Valve with Type 3271 Pneumatic Actuator (see page 96)

– **Type 3251-7 or 3256-7:** Valve with Type 3277 Pneumatic Actuator (see page 96)



Type 3251-1 with Type 3271 Actuator



Type 3256-1 with Type 3271 Actuator

Technical data · DIN version

			Type 3251						Type 3251-AM
Material			Cast steel · 1.0619		Cast steel · 1.7357		Cast stainless steel 1.4408		AM stainless steel 1.4401/1.4404
Nominal size [1]		DN	15 to 150	200 to 300	15 to 150	200 to 300	15 to 150	200 to 300	15 to 80
Pressure rating [1]		PN	16 to 400	Up to 160	16 to 400	Up to 160	16 to 400	Up to 160	16 to 400
Connection	Flanges		All DIN EN versions						
	Welding ends		DIN EN 12627						
Seat-plug seal			Metal seal · Soft seal · High-performance metal seal						
Characteristic			Equal percentage, linear, on/off according to ▶ **T 8000-3**						
Rangeability			50:1						
Conformity			CE						
Temperature ranges in °C · Permissible operating pressures acc. to pressure-temperature diagrams (see Information Sheet ▶**T 8000-2**)									
Body without insulating section			-10 to +220 · Up to +350 with high-temperature packing						
Body with	Insulating section or bellows seal		-10 to +400		-10 to +500		-196 to +550		-196 to +450
Valve plug [2]	Standard	Metal seal	-196 to +550						-196 to +450
		Soft seal	-196 to +220						-196 to +220
	Balanced with PTFE ring		-50 to +220 [3]						-50 to +220 [3]
	Balanced with graphite ring		220 to 500 [4]						220 to 450
Leakage class according to IEC 60534-4									
Valve plug	Standard	Metal seal	Standard: IV · High performance: V						
		Soft seal	VI						
	Balanced, metal seal		With PTFE ring (standard): IV · High-performance metal seal: V With graphite ring: IV						
Data sheet			▶ **T 8051**						

[1] On request
[2] Only in combination with suitable body material
[3] Lower temperatures on request
[4] Higher temperatures on request



Type 3251-1 with Type 3271 Actuator

Technical data · ANSI version

			Type 3251			Type 3251-AM
Material			Cast steel A216 WCC	Cast steel A217 WC6	Cast stainless steel A351 CF8M	AM Stainless steel 316/316L
Nominal size and pressure rating			NPS ½ to 12 in Class 150 to 2500 NPS 14 in Class 150 to 600 NPS 16 to 20 in Class 150 to 1500			NPS ½ to 3 in Class 150 to 2500
Connection		Flanges	All ANSI versions			
		Welding ends	According to ANSI B16.25			
Seat-plug seal			Metal seal · Soft seal · High-performance metal seal			
Characteristic			Equal percentage, linear, on/off according to ▶ **T 8000-3**			
Rangeability			50:1			
Conformity			CE			
Temperature ranges in °F (°C) · Permissible operating pressures acc. to pressure-temperature diagrams (see Information Sheet ▶ **T 8000-2**)						
Body without insulating section			14 to 428 (-10 to +220) · Up to 662 (350) with high-temperature packing			
Body with		Insulating section or bellows seal	-20 to +800 (-29 to +425)	-20 to +932 (-29 to +500)	-325 to +1022 (-196 to +550) [2]	-325 to +842 (-196 to +450) [2]
Valve plug [1]	Standard	Metal seal	-325 to +1022 (-196 to +550) [2]			-325 to +842 (-196 to +450) [2]
		Soft seal	-325 to +428 (-196 to +220) [2]			-325 to +428 (-196 to +220) [2]
	Balanced with PTFE ring		-58 to +428 (-50 to +220) [3]			-58 to +428 (-50 to +220) [3]
	Balanced with graphite ring		428 to 932 (220 to 500) [4]			428 to 842 (220 to 450)
Leakage class according to ANSI/FCI 70-2						
Valve plug	Standard	Metal seal	Standard: IV · High performance: V			
		Soft seal	VI			
	Balanced, metal seal		With PTFE ring (standard): IV · High-performance metal seal: V With graphite ring: IV			
Data sheet			▶ **T 8052**			

[1] Only in combination with suitable body material
[2] Note: The temperature limits are not directly converted temperatures.
[3] Lower temperatures on request
[4] Higher temperatures on request



Type 3251-1 with Type 3271 Actuator

Accessories

– Positioners, limit switches, solenoid valves

Further versions

– With flow divider or AC trim

Technical data · DIN version

			Type 3256					
Material			Cast steel · 1.0619		Cast steel · 1.7357		Cast stainless steel 1.4408	
Nominal size [1]		DN	15 to 150	200 to 300	15 to 150	200 to 300	15 to 150	200 to 300
Pressure rating [1]		PN	16 to 400	16 to 100	16 to 400	16 to 100	16 to 400	16 to 100
Connection	Flanges		All DIN EN versions					
	Welding ends		DIN EN 12627					
Seat-plug seal			Metal seal · Soft seal · High-performance metal seal					
Characteristic			Equal percentage, linear, on/off according to ▶ **T 8000-3**					
Rangeability			50:1					
Conformity			CE					
Temperature ranges in °C · Permissible operating pressures acc. to pressure-temperature diagrams (see Information Sheet ▶**T 8000-2**)								
Body without insulating section			-10 to +220 · Up to +350 with high-temperature packing					
Body with	Insulating section or bellows seal		-10 to +400		-10 to +500		-196 to +550	
Valve plug [2]	Standard	Metal seal	-196 to +550					
		Soft seal	-196 to +220					
	Balanced with PTFE ring		-50 to +220 [3]					
	Balanced with graphite ring		220 to 500 [4]					
Leakage class according to IEC 60534-4								
Valve plug	Standard	Metal seal	Standard: IV · High performance: V					
		Soft seal	VI					
	Balanced, metal seal		With PTFE ring (standard): IV · High-performance metal seal: V With graphite ring: IV					
Data sheet			▶ **T 8065**					

1) Only in combination with suitable body material
2) Note: The temperature limits are not directly converted temperatures.
3) Lower temperatures on request
4) Higher temperatures on request



Type 3256-1 with Type 3271 Actuator

Technical data · ANSI version

			Type 3256		
Material			Cast steel A216 WCC	Cast steel A217 WC6	Cast stainless steel A351 CF8M
Nominal size and pressure rating			NPS ½ to 12 in Class 150 to 2500		
Connection		Flanges	All ANSI versions		
		Welding ends	According to ANSI B16.25		
Seat-plug seal			Metal seal · Soft seal · High-performance metal seal		
Characteristic			Equal percentage, linear, on/off according to ▶ **T 8000-3**		
Rangeability			50:1		
Conformity			CE		
Temperature ranges in °F (°C) · Permissible operating pressures acc. to pressure-temperature diagrams (see Information Sheet ▶ **T 8000-2**)					
Body without insulating section			14 to 428 (-10 to +220) · Up to 662 (350) with high-temperature packing		
Body with		Insulating section or bellows seal	-20 to +800 (-29 to +425)	-20 to +932 (-29 to +500)	-325 to +1022 (-196 to +550) [2]
Valve plug [1]	Standard	Metal seal	-325 to +1022 (-196 to +550) [2]		
		Soft seal	-325 to +428 (-196 to +220) [2]		
	Balanced with PTFE ring		-58 to +428 (-50 to +220) [3]		
	Balanced with graphite ring		428 to 932 (220 to 500) [4]		
Leakage class according to ANSI/FCI 70-2					
Valve plug	Standard	Metal seal	Standard: IV · High performance: V		
		Soft seal	VI		
	Balanced, metal seal		With PTFE ring (standard): IV · High-performance metal seal: V With graphite ring: IV		
Data sheet			▶ **T 8066**		

[1] Only in combination with suitable body material
[2] Note: The temperature limits are not directly converted temperatures.
[3] Lower temperatures on request
[4] Higher temperatures on request



Type 3261-1 with Type 3271 Actuator

Pneumatic Control Valves · Series 250

Three-way valve · Type 3253

Globe valve · Type 3254 with additional plug stem guide in the bottom body flange

Application

Control valve for process engineering applications with high industrial requirements according to DIN and ANSI standards

- Optional with RFID tags with unique identification according to DIN SPEC 91406

Technical data

		Type 3253 [1]							
Body material	DIN	Cast iron EN-JL1040		Cast steel 1.0619		Cast steel 1.7357		Cast stainless steel 1.4408	
	ANSI	-		A216 WCC		A217 WC6		A351 CF8M	
Nominal size	DN	15 to 200	250 to 500	15 to 100	150 to 400	15 to 400		15 to 100	150 to 400
	NPS	-	-	½ to 4	6 to 20	½ to 4	6 to 20	½ to 4	6 to 20
Pressure rating [2]	PN	16	10	16 to 160	16 to 160	16 to 160		16 to 160	16 to 160
	Class	-	-	150 to 900	150 to 900	150 to 900	150 to 900	150 to 900	150 to 900
Connection	DIN	Flanges							
	ANSI	Flanges according to B16.5, welding ends according to B16.25							
Leakage class acc. to IEC 60534-4 or ANSI/FCI 70-2		Metal seal Class: I 0.05 % K_{VS}							
Characteristic		Linear							
Rangeability		50:1							
Temperature range		-10 to +220 °C (14 to 428 °F)							
With high-temperature packing		Up to 350 °C (662 °F)							
With insulating section		See data sheets							
Conformity		CE							
Data sheets		**▶ T 8055 (DIN), ▶ T 8056 (ANSI)**							

1) Depending on plug arrangement as mixing or diverting valve

2) Higher pressures on request



Type 3253-1 with Type 3271 Actuator

Technical data

		Type 3254		
Body material	DIN	Cast steel 1.0619	Cast steel 1.7357	Cast stainless steel 1.4408
	ANSI	A216 WCC	A217 WC6	A351 CF8M
Nominal size		DN 80 to 500 (NPS 3 to 20)		
Pressure rating		PN 16 to 400 (Class 150 to 2500)		
Connection	DIN	Flanges according to DIN EN 1092, welding ends according to EN 12627		
	ANSI	Flanges according to B16.5, welding ends according to B16.25		
Leakage class acc. to IEC 60534-4 or ANSI/ FCI 70-2		Metal seal: IV Soft seal: VI High-performance metal seal: V		
Characteristic		Equal percentage, linear, on/off		
Rangeability		50:1		
Temperature range		-10 to +220 °C (14 to 428 °F)		
With high-temperature packing		220 to 350 °C (428 to 662 °F)		
With insulating section		-196 to +550 °C (-325 to +1022 °F)		
Conformity		CE		
Data sheets		**▶ T 8060 (DIN), ▶ T 8061 (ANSI)**		



Type 3254-1 with Type 3271 Actuator

Application

Steam converters (globe valve or angle valve) for process engineering applications and thermal plants

Technical data

		Type 3281 Globe Valve	Type 3286 Angle Valve
Body material	DIN	Cast steel: 1.0619/1.7357	
	ANSI	Cast steel: A216 WCC/A217 WC6	
Nominal size	DN	50 to 300	50 to 300
	NPS	2 to 12	2 to 12
Pressure rating		PN 16 to 160 (Class 150 to 900)	
Connection	DIN	Flanges according to DIN EN 1092, welding ends according to EN 12627	
	ANSI	Flanges according to B16.5, welding ends according to B16.25	
Seat-plug seal Leakage class acc. to IEC 60534-4 or ANSI/ FCI 70-2		Metal seal: IV High-performance metal seal: V Balanced: min. IV (depending on version)	
Characteristic		Equal percentage, linear	
Rangeability		50:1	
Temperature range		-10 to +220 °C (14 to 428 °F)	
With high-temperature packing up to		350 °C (660 °F)	
With insulating section up to		500 °C (932 °F)	500 °C (932 °F)
Conformity		CE	
Data sheets		▶ **T 8251 (DIN),** ▶ **T 8252 (ANSI)**	▶ **T 8256 (DIN),** ▶ **T 8257 (ANSI)**



Type 3281-1 with Type 3271 Actuator



Type 3286-1 with Type 3271 Actuator

Pneumatic Control Valves

Components to reduce noise and wear

Flow dividers · AC trims · Perforated plug

Silencer · Type 3381

Application

The noise emission of the control valves and the attached pipeline is determined by the free jet exiting the restriction and the jet's turbulent mixing zone in applications with gases and vapors. When cavitation occurs, the noise level is influenced to a large extent by the pressure waves induced by the implosion of the cavitation bubbles.

The following components are used to reduce noise:

Flow dividers ST 1, ST 2 or ST 3: effective and cost-efficient components made of perforated sheet steel or hard-faced wire mesh

- Shorten the free jet in applications with gases and vapors
- Accelerate the exchange of energy in the mixing zone
- Protect the valve body

Flow dividers are suitable for SAMSON Series 240, 250, 280 and 290 as well as Series SMS Globe Valves as well as for globe valves of self-operated regulators (▶ **T 8081**).

AC trims: optimized trims for SAMSON control valves for low-noise pressure let-down of liquids (▶ **T 8082** and ▶ **T 8083**)

- Double-guided plug stem to prevent vibration
- AC-3 to AC-5 Trims: multi-stage pressure reduction at high differential pressures

Versions

– **AC-1 Trim:** Noise-optimized trim, parabolic plug with double plug stem guide. Suitable for DN 50 to 300 and PN 16 to 160 (▶ **T 8082**)

– **AC-3 Trim:** Multi-stage parabolic plug for DN 15 to 300 and PN 40 to 400 (▶ **T 8083**)

Control valves with perforated plug: mainly used for valves in steam applications, particularly for operation in the wet steam region, the control of two-phase medium flow, liquid media which vaporize on the outlet side (flashing valves) or emergency relief valves (blow-off valves). The perforated plug splits up the jet stream into numerous smaller jets and ensures low-noise energy transfer to the surrounding medium. Suitable for Types 3241, 3246, 3248, 3251, 3254 and 3256 (▶ **T 8086**), Type 251GR (▶ **T 8000-3/T 8000-4**), Type 3291 (▶ **T 8072-1**) and Type 3296 (▶ **T 8074-1**).

Type 3381 Silencer:·fixed restrictor package that can be installed downstream of the valve with one to five attenuation plates for applications with liquids, gases or vapors. The silencer increases the backpressure downstream of the valve. With gases and vapors this leads to a reduction in the valve outlet velocity and sound pressure level. With liquids this leads to a reduction in the sound pressure level (▶ **T 8084**).

- DN 40 to 800 (NPS 1½ to 32) · PN 10 to 400 (Class 150 to 2500)

Versions (▶ **T 8084**)

– Sandwich version with single attenuation plate

– Body for two to five attenuation plates mounted using flanges



Flow divider ST 1

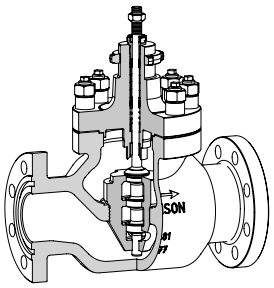

Type 3251 with AC-3 Trim

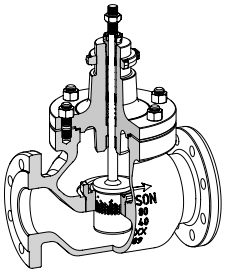

Type 3251 with perforated plug

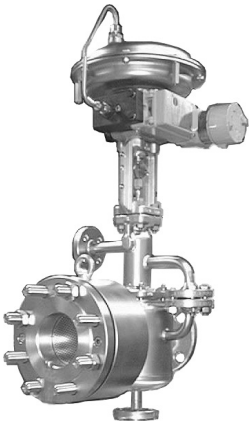

Type 3381, flanged to control valve with heating jacket

Pneumatic Control Valves for Plant Engineering

On/off valve · Type 3351

Angle seat valve · Type 3353

Globe valve · Type 3354

Application

On/off valves designed for mechanical and plant engineering. Tight shut-off. Suitable for liquids, gases and steam.

Versions

Pneumatic control valves in accordance with DIN or ANSI standards

- **Type 3351:** On/off valve with pneumatic actuator
- **Type 3353:** Globe valve made of stainless steel with angle seat body, soft-seated flat plug and pneumatic piston actuator, optionally with limit switch and/or solenoid valve
- **Type 3354:** Globe valve with straight pattern body, soft-seated flat plug and pneumatic piston actuator, optionally with limit switch and/or solenoid valve

Technical data

		Type 3351	Type 3353	Type 3354
Body material	Cast iron	•	–	•
	Spheroidal graphite iron	•	–	–
	Cast steel	•	–	–
	Stainless steel	•	•	–
Nominal size	DN	15 to 100	15 to 50 G ½ to G 2	15 to 80
	NPS	½ to 4	–	–
Pressure rating	PN	Up to 40	40	16
	Class	Up to 300	–	–
Connection	Flanges	•	–	•
	Welding ends	–	•	–
	Female thread	–	•	–
Leakage class		VI	–	–
Characteristic		On/off		
Medium temperature range		-10 to +220 °C (14 to 428 °F)	-10 to +180 °C	-10 to +180 °C
Ambient temperature range		NBR: -35 to +100 °C (-31 to +212 °F) EPDM: -40 to +150 °C (-40 to +302 °F) FKM: -25 to +200 °C (-13 to +392 °F)	-10 to +60 °C	-10 to +60 °C
Conformity		CE		
Actuator		Integrated	30/60 cm²	30, 60, 120 cm²
Data sheets		**▶ T 8039**	**▶ T 8139**	**▶ T 8140**

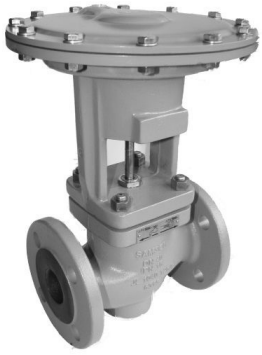

Type 3351



Type 3353



Type 3354

Application

Pneumatic control valves for the food processing and pharmaceutical industries. Optionally with Type 3271 or Type 3277 Pneumatic Actuators for integral attachment of positioners and accessories or with Type 3372 or Type 3379 Actuators.

Conformity

The Type 3347 Hygienic Valve complies with the following regulations and standards:

- FDA 21 CFR 177.1550, FDA 21 CFR 177.2600, FDA 21 CFR 177.2415
- NSF H1
- EC 1935/2004
- EU 10/2001
- EC 2023/2006
- Free of animal-derived ingredients (ADI-free)
- EC 999/2001, revision 2015: TSE/BSE free
- Versions complying with EHEDG (on request), 3-A regulations (depending on the version)

Versions

Control valves in accordance with DIN or ANSI standards

- **Type 3347:** Hygienic angle valve with Type 3271 or Type 3277 Actuator

Technical data

		Type 3347	
Body version		Casting	Bar stock
Body material	1.4404/316L	–	•
	1.4409/CF3M	•	–
	1.4435/316L	–	•
	Special materials	–	•
Nominal size	DN	15 to 100	15 to 150
	NPS	½ to 4	½ to 6
Bonnet	Bolted-on	–	Up to 63 bar (914 psi)
	Clamp	•	Up to 16 bar (230 psi)
Max. pressure		16 bar (230 psi)	16 bar (230 psi) Option: 63 bar (914 psi)
Connection	Flanges	•	•
	Welding ends	•	•
	Thread	•	•
	Clamps	•	•
Leakage class		Up to VI	Up to VI
Characteristic		Equal percentage or linear	Equal percentage or linear
Steam barrier		•	•
Medium temperature range		-10 to 150 °C (14 to 300 °F)	-10 to 150 °C (14 to 300 °F)
Cleaning	CIP	•	•
	SIP	•	•
Conformity		CE	
Actuator		Type 3271/Type 3277	
Data sheet		▶ **T 8097**	



Type 3347/3277
with Type 3725 Positioner



Type 3347/3379
with Type 3724 Positioner

– **Type 3347:** hygienic angle valve with Type 3372 Actuator and as micro-flow valve

Technical data

		Type 3347	
Body version		Micro-flow valve [1]	For Type 3372 Actuator
Nominal size	DN	6 to 15	15 to 100
	NPS	¼ to 1	½ to 4
	1.4409/ A351 CF3M		Casting
	1.4435/316L	•	–
	Special materials	•	–
Bonnet	Bolted-on	•	–
	Clamp		•
Max. pressure		16 bar (230 psi) Option: 63 bar (914 psi)	16 bar (230 psi)
Connection	Flanges	•	–
	Welding ends	•	•
	Thread	•	–
	Clamps	•	–
Leakage class		Up to IV	Up to IV
Characteristic		Equal percentage or linear	Equal percentage or linear
Medium temperature range		-10 to 150 °C (14 to 300 °F)	0 to 150 °C (32 to 300 °F)
Cleaning	CIP	•	•
	SIP	•	–
Conformity		CE	
Actuator		Type 3271/Type 3277	Type 3372
Data sheets		▶ **T 8097**	▶ **T 8097-1**

[1] K_{VS} 0.01 to 0.25 · C_V 0.012 to 0.30



Type 3347/3372
with Type 3725 Positioner



Type 3347/3379
with Type 3724 Positioner

– **Type 3347:** Hygienic angle valve with Type 3379 Actuator

Technical data

		Type 3347		
Body version		Casting	Bar stock	Micro-flow valve
Body material	1.4404/316L	–	•	–
	1.4409/CF3M	•	–	–
	1.4435/316L	–	•	•
	Special materials	•	•	–
Nominal size	DN	15 to 80 [1]	15 to 80 [1]	6 to 15
	NPS	½ to 3 [1]	½ to 3 [1]	¼ to ½
Bonnet	Bolted-on	–	Up to 63 bar (914 psi)	•
	Clamp	•	Up to 16 bar (230 psi)	–
Max. pressure		16 bar (230 psi)	16 bar (230 psi) Option: 63 bar (914 psi)	16 bar (230 psi)
Connection	Flanges	•	•	•
	Welding ends	•	•	•
	Thread	•	•	•
	Clamp	•	•	•
Leakage class		Up to VI	Up to VI	Up to IV
Characteristic		Equal percentage, linear	Equal percentage, linear	Equal percentage, linear
Steam barrier		•	•	
Medium temperature range		-10 to 150 °C (14 to 300 °F)	-10 to 150 °C (14 to 300 °F)	-10 to 150 °C (14 to 300 °F)
Cleaning	CIP	•	•	•
	SIP	•	•	•
Conformity		CE		
Actuator		Type 3379		
Data sheet		▶ **T 8097**		

[1] Only for version with clamp in DN 65 to 80/NPS 2½ to 3



Compact automated unit:
Type 3347/3379
with Type 3724 Positioner

Pneumatic Control Valves for Hygienic and Aseptic Applications

Aseptic angle valve · Type 3349

Application

Control valve for aseptic applications in the food and pharmaceutical industries according to DIN or ANSI standards with USP-VI diaphragm

Conformity

The Type 3349 Aseptic Valve complies with the following regulations and standards:

- FDA 21 CFR 177.1550, FDA 21 CFR 177.2600, FDA 21 CFR 177.2415
- NSF H1
- EC 1935/2004
- EU 10/2011
- USP Class VI-121 °C
- EC 2023/2006
- Free of animal-derived ingredients (ADI-free)
- EC 999/2001, revision 2015: TSE/BSE free
- Versions complying with EHEDG and 3-A regulations on request

Versions

- **Type 3349:** Aseptic angle valve with Type 3271 or Type 3277 Pneumatic Actuator
- **Type 3349:** Aseptic angle valve with Type 3379 Pneumatic Actuator

Technical data

		Type 3349	
Body material	1.4435/316L	•	•
	Special materials	•	•
Actuator		Type 3271/3277	Type 3379
Nominal size	DN	15 to 100	8 to 50
	NPS	½ to 4	¼ to 2
Bonnet	Bolted-on	•	•
Max. pressure		10 bar (150 psi)	10 bar (150 psi)
Connection	Flanges	•	•
	Welding ends	•	•
	Thread	•	•
	Clamps	•	•
Leakage class		Up to VI	Up to VI
Characteristic		Equal percentage or linear	Equal percentage or linear
Sterilization temperature		180 °C (356 °F) up to 30 min	180 °C (356 °F) up to 30 min
Operating temperature range		0 to 160 °C (32 to 320 °F)	0 to 160 °C (32 to 320 °F)
Cleaning	CIP	•	•
	SIP	•	•
Conformity		CE·EAC	
Data sheets		▶ **T 8048-21**	▶ **T 8048-22**



Compact automated unit: Type 3349/3379 Angle Valve with Type 3724 Positioner



Type 3349/3277 with Type 3730 Positioner

Application

Type 3321CT Globe Valve for auxiliary media in the process industry with Type 3379 Pneumatic Actuator and Type 3724 Positioner

Special features

- Completely made of stainless steel for hygienic, corrosive environments. Especially suitable for auxiliary media (e.g. water and steam) in the food and beverage industry as well as biotech sector
- Skid mounting and compact design facilitate installation
- Gaskets and packings are compliant with food and beverage requirements (EU 1935/2004 and FDA).
- Display, auto tuning and error monitoring

Versions

– **Type 3321CT:** Globe valve with Type 3379 Pneumatic Actuator and Type 3724 Positioner

Technical data

		Type 3321CT
Body material		1.4408/A351 CF8M
Nominal size	DN	15 to 80
	NPS	½ to 3
Pressure rating	PN	PN 16 to 40
	Class	Class 150 and 300
Connection		Flanges: B1 according to EN 1092-1 RF according to ASME B16.5
Leakage class according to IEC 60534-4 or ANSI/FCI 70-2		Metal seal: IV Soft seal: VI
Characteristic		Equal percentage
Medium temperature range		-10 to +220 °C (14 to 428 °F)
Conformity		CE · EAC
Actuator/positioner		Type 3379/Type 3724
Data sheet		▶ **T 8115**

Further versions

– With reduced K_{VS} coefficients
– With soft-seated plug for bubble-free shut-off
– As on/off valve with Type 4740 Limit Switch

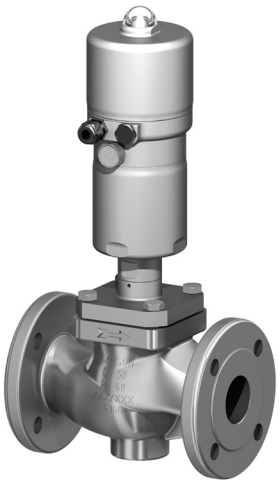

Type 3321CT/3379
with Type 3724 Positioner

Pneumatic Diaphragm Valves for Aseptic Applications

SAMSON SED Steripur Series Diaphragm Valves

Application

Pneumatic diaphragm valves with minimized dead spaces for aseptic applications in the food processing and pharmaceutical industries according to ASME BPE, DIN or ISO standards

Versions

- **Steripur 217:** Diaphragm valve with stainless steel double-piston actuator
- **Steripur 317, Steripur 407 Steripur 417:** Diaphragm valves with stainless steel piston actuator

Technical data

Stainless steel piston actuator		**Steripur 217**	**Steripur 317**	**Steripur 417**	**Steripur 407**
Body material		Investment casting or forged steel 1.4435 · A316L [1]			
Nominal size	DN	4 to 15	8 to 20	15 to 65	65 to 100
	NPS	¼ to ½	⅜ to ¾	¾ to 2½	2½ to 4
Max. operating pressure	EPDM diaphragm	8 bar		10 bar ≤DN 50 [2]	
	PTFE diaphragm	7 bar		8 bar ≤DN 50 [3]	
Connection		Welding ends · Clamps · Aseptic flanges · Special versions			
Characteristic		On/off			
Behavior		Quick opening · Self draining			
Diaphragm		MA 8	MA 10	MA 25 to 50	MA 80, 100
Diaphragm material	EPDM	Single-piece			
	PTFE/EPDM	Single-piece		Single-piece, two-piece	Two-piece
Max. medium temperature		160 °C			
Medium temperature range	EPDM, one-piece	-40 to +150 °C			
	PTFE/EPDM, one-piece	-20 to +150 °C (MA 50 and lower)			–
	PTFE/EPDM, two-piece	–		-20 to +160 °C	
Certificates	EPDM Code 28	FDA CFR #21 Section 177.2600 · USP Class VI Test Section #87 + 88, 3-A Sanitary Class II			
	PTFE/EPDM Code 30/44	FDA CFR #21 Section 177.1550 · USP Class VI Test Section #87 + 88, 3-A Sanitary Class I			
Conformity		CE			
Actuator		Stainless steel piston actuator			
Data sheets		▶ **T 217**	▶ **T 317**	▶ **T 417**	▶ **T 407**

[1] Other materials, e.g. 1.4539/AISI 904L, on request
[2] DN 65 and 80: 7 bar; DN 100: 6 bar
[3] DN 65 and 80: 6 bar; DN 100: 5 bar



Steripur 217



Steripur 317



Steripur 417



Steripur 407

– **Steripur 206, Steripur 397, Steripur 907 and Steripur 997**
Diaphragm valves with stainless steel bonnet and handwheel

Technical data

Stainless steel bonnet and handwheel		**Steripur 206**	**Steripur 397**	**Steripur 907**	**Steripur 997**
Body material		Investment casting or forged steel 1.4435 · A316L [1]			
Nominal size	DN	4 to 15	8 to 20	15 to 65	65 to 100
	NPS	¼ to ½	⅜ to ¾	¾ to 2½	2½ to 4
Max. operating pressure	EPDM diaphragm	10 bar			
	PTFE diaphragm	10 bar		10 bar ≤DN 50 [2]	
Connection		Welding ends · Clamps · Aseptic flanges · Special versions			
Characteristic		On/off			
Behavior		Self draining			
Diaphragm		MA 8	MA 10	MA 25 to 50	MA 80 to 100
Diaphragm material	EPDM	Single-piece			
	PTFE/EPDM	Single-piece		Single-piece, two-piece	Two-piece
Max. medium temperature		160 °C			
Medium temperature range	EPDM, one-piece	-40 to +150 °C			
	PTFE/EPDM, one-piece	-20 to +150 °C			–
	PTFE/EPDM, two-piece	–		-20 to +160 °C	
Certificates	EPDM Code 28	FDA CFR #21 Section 177.2600 · USP Class VI Test Section #87 + 88, 3-A Sanitary Class II			
	PTFE/EPDM Code 30/44	FDA CFR #21 Section 177.1550 · USP Class VI Test Section #87 + 88, 3-A Sanitary Class I			
Conformity		CE			
Actuator		Stainless steel bonnet and hand-operated actuator			
Data sheets		**▶ T 206**	**▶ T 397**	**▶ T 907**	**▶ T 997**

[1] Other materials, e.g. 1.4539/AISI 904L, on request
[2] DN 65 to 100: 8 bar



Steripur 206



Steripur 397



Steripur 907



Steripur 997

Pneumatic Diaphragm Valves for Aseptic Applications

SAMSON SED KMA Series Diaphragm Valves

Application

Pneumatic diaphragm valves with minimized dead spaces for aseptic applications in the food processing and pharmaceutical industries according to ASME BPE, DIN or ISO standards

Versions

- **KMA 190, KMA 195, KMA 395:** Diaphragm valves with plastic piston actuator and stainless steel adapter
- **KMA 495:** Diaphragm valve with plastic diaphragm actuator and stainless steel adapter

Technical data

Plastic actuator with stainless steel adapter		**KMA 190**	**KMA 195**	**KMA 395**	**KMA 495**
Body material		Investment casting or forged steel 1.4435 · A316L [1]			
Nominal size	DN	4 to 15	8 to 20	15 to 65	15 to 100
	NPS	¼ to ½	⅜ to ¾	¾ to 2½	¾ to 4
Max. operating pressure	EPDM diaphragm	8 bar		10 bar ≤DN 50 [2]	
	PTFE diaphragm	7 bar		8 bar ≤DN 50 [3]	
Connection		Welding ends · Clamps · Aseptic flanges · Special versions			
Characteristic		On/off			
Behavior		Quick opening · Self draining			
Diaphragm		MA 8	MA 10	MA 25 to 50	MA 25 to 50, 80, 100
Diaphragm material	EPDM	Single-piece			
	PTFE/EPDM	Single-piece		Single-piece, two-piece	Two-piece
Max. medium temperature		160 °C			
Medium temperature range	EPDM, one-piece	-40 to +150 °C			
	PTFE/EPDM, one-piece	-20 to +150 °C (MA 50 and lower)			–
	PTFE/EPDM, two-piece	–		-20 to +160 °C	



KMA 190



KMA 195



KMA 395



KMA 495

Plastic actuator with stainless steel adapter		KMA 190	KMA 195	KMA 395	KMA 495
Certificates	EPDM Code 28	FDA CFR #21 Section 177.2600 · USP Class VI Test Section #87 + 88, 3-A Sanitary Class II			
	PTFE/EPDM Code 30/44	FDA CFR #21 Section 177.1550 · USP Class VI Test Section #87 + 88, 3-A Sanitary Class I			
Actuator		Thermoplastic piston actuator with stainless steel adapter			Plastic diaphragm actuator with stainless steel adapter
Conformity		CE			
Data sheets		**▶ T 190**	**▶ T 195**	**▶ T 395**	**▶ T 495**

1) Other materials, e.g. 1.4539/AISI 904L, on request
2) DN 65 and 80: 7 bar; DN 100: 6 bar
3) DN 65 and 80: 6 bar; DN 100: 5 bar

– **KMA 205, KMA 305, KMA 905 and KMA 995**
Diaphragm valves with stainless steel bonnet and plastic handwheel

Technical data

Stainless steel bonnet and plastic handwheel		KMA 205	KMA 305	KMA 905	KMA 995
Body material		Investment casting or forged steel 1.4435 · A316L [1]			
Nominal size	DN	4 to 15	8 to 20	15 to 65	65 to 100
	NPS	¼ to ½	⅜ to ¾	¾ to 2½	2½ to 4
Max. operating pressure	EPDM diaphragm	10 bar			
	PTFE diaphragm	10 bar		10 bar ≤DN 50 [2]	
Connection		Welding ends · Clamps · Aseptic flanges · Special versions			
Characteristic		On/off			
Behavior		Self draining			
Diaphragm		MA 8	MA 10	MA 25 to 50	MA 80 to 100
Diaphragm material	EPDM	Single-piece			
	PTFE/EPDM	Single-piece		Single-piece, two-piece	Two-piece
Max. medium temperature		160 °C			
Medium temperature range	EPDM, one-piece	-40 to +150 °C			
	PTFE/EPDM, one-piece	-20 to +150 °C			–
	PTFE/EPDM, two-piece	–		-20 to +160 °C	
Certificates	EPDM Code 28	FDA CFR #21 Section 177.2600 · USP Class VI Test Section #87 + 88, 3-A Sanitary Class II			
	PTFE/EPDM Code 30/44	FDA CFR #21 Section 177.1550 · USP Class VI Test Section #87 + 88, 3-A Sanitary Class I			
Conformity		CE			
Actuator		Stainless steel bonnet and thermoplastic hand-operated actuator			
Data sheets		**▶ T 205**	**▶ T 305**	**▶ T 905**	**▶ T 995**

1) Other materials, e.g. 1.4539/AISI 904L, on request
2) DN 65 and 100: 8 bar


KMA 205


KMA 305


KMA 905


KMA 995

Pneumatic Diaphragm Valves for Aseptic Applications

SAMSON SED KMD Series Diaphragm Valves

Application

Pneumatic diaphragm valves with minimized dead spaces for aseptic applications in the food processing and pharmaceutical industries according to ASME BPE, DIN or ISO standards

Versions

- **KMD 188:** Diaphragm valve with plastic piston actuator directly mounted onto the valve body
- **KMD 385:** Diaphragm valve with plastic diaphragm actuator directly mounted onto the valve body
- **KMD 402:** Diaphragm valve with plastic piston actuator

Technical data

Plastic actuator		**KMD 188**	**KMD 402**	**KMD 385**
Body material		Investment casting or forged steel 1.4435 · A316L [1)]		
Nominal size	DN	8 to 20	15 to 65	15 to 80
	NPS	⅜ to ¾	¾ to 2½	¾ to 3
Max. operating pressure	EPDM diaphragm	8 bar	10 bar	10 bar [2)]
	PTFE diaphragm	7 bar	8 bar	8 bar [3)]
Connection		Welding ends · Clamps · Aseptic flanges · Special versions		
Characteristic		On/off		
Behavior		Quick opening · Self draining		
Diaphragm		MA 10	MA 25 to 50	MA 15 to 50, 80
Diaphragm material	EPDM	Single-piece		
	PTFE/EPDM	Single-piece	Single-piece, two-piece	
Max. medium temperature		PS version: 80 °C HS version: 150 °C	150 °C	80 °C
Medium temperature range	EPDM, one-piece	-40 to +150 °C		
	PTFE/EPDM, one-piece	-20 to +150 °C	–	
	PTFE/EPDM, two-piece	–	-20 to +160 °C	
Certificates	EPDM Code 28	FDA CFR #21 Section 177.2600 · USP Class VI Test Section #87 + 88, 3-A Sanitary Class II		
	PTFE/EPDM Code 30/44	FDA CFR #21 Section 177.1550 · USP Class VI Test Section #87 + 88, 3-A Sanitary Class I		



KMD 188



KMD 402



KMD 385

Plastic actuator	KMD 188	KMD 402	KMD 385
Actuator	Plastic piston actuator directly mounted onto the valve body	Plastic piston actuator directly mounted onto the valve body	Plastic diaphragm actuator directly mounted onto the valve body
Conformity	CE		
Data sheets	▶ **T 188**	▶ **T 402**	▶ **T 385**

1) Other materials, e.g. 1.4539/AISI 904L, on request
2) DN 65 and 80: 7 bar
3) DN 65 and 80: 6 bar



KMD 289

– **KMD 289, KMD 982 and KMD 985**
Diaphragm valves with plastic bonnet and handwheel

Technical data

Plastic bonnet and handwheel		KMD 289	KMD 982	KMD 985
Body material		Investment casting or forged steel 1.4435 · A316L 1)		
Nominal size	DN	8 to 20	15 to 65	65 to 100
	NPS	⅜ to ¾	¾ to 2½	2½ to 4
Max. operating pressure	EPDM diaphragm	6 bar	10 bar	10 bar
	PTFE diaphragm	6 bar	10 bar	8 bar
Connection		Welding ends · Clamps · Aseptic flanges · Special versions		
Characteristic		On/off		
Behavior		Quick opening · Self draining		
Diaphragm		MA 10	MA 25 to 50	MA 80 to 100
Diaphragm material	EPDM	Single-piece		
	PTFE/EPDM	Single-piece	Single-piece, two-piece	Two-piece
Max. medium temperature		S version: 80 °C HS version: 150 °C	80 °C	80 °C
Medium temperature range	EPDM, one-piece	-40 to +150 °C		
	PTFE/EPDM, one-piece	-20 to +150 °C		–
	PTFE/EPDM, two-piece	–		-20 to +160 °C
Certificates	EPDM Code 28	FDA CFR #21 Section 177.2600 · USP Class VI Test Section #87 + 88, 3-A Sanitary Class II		
	PTFE/EPDM Code 30/44	FDA CFR #21 Section 177.1550 · USP Class VI Test Section #87 + 88, 3-A Sanitary Class I		
Actuator		Plastic bonnet and hand-operated actuator		
Conformity		CE		
Data sheets		▶ **T 289**	▶ **T 982**	▶ **T 985**

1) Other materials, e.g. 1.4539/AISI 904L, on request



KMD 982



KMD 985

Pneumatic Control Valves

Cryogenic valves

Type 3248 with bellows seal, top-entry design

Type 3246 with long insulating section and circulation inhibitor

Type 3598 with circulation inhibitor, top-entry design

Application

Control valve for use in cryogenic applications for liquids and gases

Special features

- Globe or angle valve with pneumatic actuator
- Valve body made of cold-resisting stainless steel with welding ends, angle valve also available made of aluminum
- Insulating section with integrated bellows seal to protect the stem guide from freezing up. As a result, the valve can be mounted in any desired position
- Prepared for installation in cold-box systems
- Valve trim can be exchanged without having to remove the valve
- Optional with RFID tags with unique identification according to DIN SPEC 91406

Versions

Globe or angle-style valve body with welding-neck ends and cryogenic extension bonnet, self-adjusting PTFE or PTFE/carbon V-ring packing, metal or soft-seated valve plug

– **Type 3248-7:** Cryogenic valve with Type 3277 Pneumatic Actuator (see page 96)

– **Type 3248-1:** Cryogenic valve with Type 3271 Pneumatic Actuator (see page 96)

Technical data

Nominal size	**DN**	**25 to 150**	
	NPS	**1 to 6**	
Body style		Globe valve	Angle valve
Body material		1.4308 A351 CF8	1.4308 or AlMg4, 5MnF27 A351 CF8
Pressure rating	PN	16 to 100	
	Class	150 to 600	
Connection		Welding ends, welding-neck ends	
Seat-plug seal Leakage class acc. to IEC 60534-4 or ANSI/FCI 70-2		Metal seal: IV Soft seal: VI High-performance metal seal: V	
Characteristic		Equal percentage, linear, on/off	
Rangeability		50:1 up to DN 50 (NPS 2) 30:1 for DN 80 (NPS 3) and larger	
Temperature range		Standard: -196 to +65 °C (-321 to +149 °F) Cryogenic range: down to -273 °C, ANSI: down to -254 °C (-425 °F)	
Conformity		CE	
Data sheets		▶ **T 8093 (DIN),** ▶ **T 8093-1 (ANSI)** Actuators: ▶ **T 8310-1**	

Accessories

– Positioners, limit switches, solenoid valves



Type 3248-7 Control Valve (steel globe valve) with Series 3730 Positioner and supply pressure regulator



Type 3248-1 Control Valve (steel angle valve) with Series 3730 Positioner, supply pressure regulator and additional handwheel

– **Type 3246:** cryogenic valve with long insulating section and circulation inhibitor, ANSI version

Application

Globe valve for cryogenic applications

Special features

- Globe or three-way valve with pneumatic actuator
- Valve body made of cast stainless steel
- Valve plug with metal seal or high-performance metal seal
- Long insulating section
- Circulation inhibitor to prevent the flow conditions of the process medium from having any effect in the insulating section
- Optional with RFID tags with unique identification according to DIN SPEC 91406

Versions

Standard version for temperatures from -196 to +65 °C (-325 to +149 °F) with long insulating section, cover plate with collar and circulation inhibitor

– **Type 3246-1:** Valve with Type 3271 Pneumatic Actuator (see page 96)
– **Type 3246-7:** Valve with Type 3277 Pneumatic Actuator (see page 96)

Technical data

Body style		**Globe valve**		**Three-way valve**
Body material		1.4308 · A351 CF8		1.4408 · A351 CF8M
Nominal size	DN	15 to 300	15 to 200	15 to 150
	NPS	½ to 12	½ to 8	½ to 6
Pressure rating	PN	16/400	100/160	16/40
	Class	150/300	600/900	150/300
Connection		Welding ends/ANSI flanges RF		ANSI flanges RF
Seat-plug seal		Metal seal		
		High-performance metal seal, Stellite®		–
Leakage class acc. to IEC 60534-4 or ANSI/FCI 70-2		Metal seal: IV High-performance metal seal: V		0.05 % of C_V
Characteristic		Equal percentage, linear, on/off		Linear
Rangeability		50:1 30:1 for NPS 3 and larger	50:1	50:1 30:1 for NPS 3 and larger
Temperature range		-196 to +65 °C (-325 to +149 °F)		-196 to +65 °C (-325 to +149 °F)
Conformity		CE		
Data sheets		▶ **T 8046-1**	▶ **T 8046-2**	▶ **T 8046-3**



Type 3246-7, Class 150/300



Type 3246-1, Class 600



Type 3246-7, Class 150/300

Pneumatic Butterfly Valves

High-performance control and shut-off butterfly valves · SAMSON PFEIFFER Type 14p PSA

Application

Bidirectional high-performance butterfly valve to isolate a single gas from a gas mixture and dry or clean gases.

Special features

- Valve size DN 80 to 400/NPS 3 to 16
- Pressure ratings PN 10 to 40/Class 150 and 300
- Body in steel (A216 WCB/1.0619) or stainless steel (A351 CF8M/1.4408)
- Lug-type and wafer-type bodies
- Standard face-to-face dimensions according to EN 558 Series 16 and API 609
- PTFE or FKM soft seal
- Operating temperature from -20 to +180 °C (-4 to +356 °F)
- Bidirectional tight shut-off for gases
- Shaft seal according to TA Luft requirements
- Attachment options according to DIN ISO 5211

Technical data

		Type 14p	
Body style		Lug-type and wafer-type bodies	
Body material		Steel 1.0619 (A216 WCB) Stainless steel 1.4408 (A351 CF8M)	
Nominal size	DN	80 to 400	
	NPS	3 to 16	
Pressure rating	PN	10 to 40	
	Class	150/300	
Seal		Soft seal (PSA version)	
Leakage class		A according to DIN EN 12266-1, P12 test	VI according to DIN EN 1349
Rangeability		50:1	
Face-to-face dimension		According to DIN: DIN EN 558, Series 16 According to ANSI: API Class 150/API Class 300	
Conformity		CE	
Data sheet		▶ **T 14p**	

Accessories

– Positioners, limit switches, solenoid valves



Type 14p

Pneumatic Butterfly Valves

Butterfly valve · Type 3331

High-pressure butterfly valve · SAMSON LEUSCH Type LTR 43

Control butterfly valves · SAMSON PFEIFFER Types 10a, 10e and 14b/31a

Application

Control valves for process engineering and industrial applications

Versions

- **Type 3331:** Swing-through or angle-seated disk for liquids, vapors and gases with Type SRP/DAP Pneumatic Actuator or Type 3278 Diaphragm Actuator
- **Type LTR 43:** Triple-eccentric, tight-closing, high-pressure butterfly valve with zero seat leakage in both directions of medium flow at full differential pressure. Optionally TA Luft packing, fire-safe version, extension for cryogenic or high temperatures

Technical data

		Type 3331	Type LTR 43
Body style		Wafer-type	Between flanges, lug-type, Double flange
Body material	DIN	DN 100: 1.0425, 1.4404 DN 150 and larger: 1.0619, 1.4408	1.4408 1.0619
	ANSI	DN 100: A414 Gr D, 316L NPS 6 and larger: A216 WCC, A351 CF8M	A216 WCC/WCB A351 CF8M
Nominal size	DN	100 to 400	80 to 2000
	NPS	4 to 16	3 to 80
Pressure rating	PN	10 to 40	10 to 320
	Class	150, 300	150 to 2500
Butterfly disk Material		1.4581	A216 WCC/WCB A351 CF8M
Seal		Metal seal	Graphite on metal core Stellite® faced, PTFE
Leakage		DN 100 to 150/NPS 4 to 6: ≤1 % DN 200 to 400/NPS 8 to 16: ≤0.5 %	Class VI DIN EN 1349/ ANSI/FCI 70-2
Opening angle		90°, 70°	80° (90°)
Throttling service up to		70°	70°
Rangeability		50:1 with φ_{100} = 70°	> 50:1
Temperature range		-10 to +220 °C (14 to 428 °F) for standard version	-196 to +700 °C (-321 to +1292 °F)
Actuator		Type SRP/DAP, Type 3278	Type SRP/DAP, on request
Conformity		CE	
Data sheets		▶ **T 8227**	▶ **T LW20010**

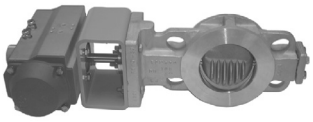

Type 3331 with Type SRP/DAP Actuator

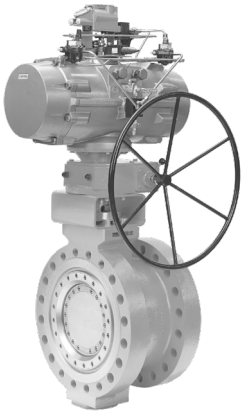

Type LTR 43

Accessories

- Positioners, limit switches, solenoid valves
- Type 10a: double-eccentric control and shut-off butterfly valve with min. 8 to 12 mm thick M-PTFE lining
- Type 10e: centric control and shut-off butterfly valve with minimum 3 mm thick isostatic PTFE lining
- Type 14b/31a: double-eccentric control and shut-off butterfly valve with Type 31a Pneumatic Piston Actuator

Technical data

		Type 10a	Type 10e	Type 14b
Body style		Wafer-type Lug-type	Wafer-type Lug-type	Wafer-type Lug-type
Body material	DIN	EN-JS 1049		1.4408 1.0619
	ANSI	A395		A216 WCB A351 CF8M
Nominal size	DN	100 to 800	50 to 400	50 to 800
	NPS	4 to 32	2 to 16	2 to 32
Pressure rating	PN	10/16	10/16	10 to 40
	Class	150		150, 300
Butterfly disk material		1.4313 coated	1.4313 coated	1.4408
Gasket		PTFE		PTFE Nickel, Inconel® 1.4571, graphite
Leakage class		A according to DIN EN 12266-1		PTFE: A according to DIN EN 12266-1 Metal seal: VI according to DIN EN 1349
Opening angle		90°		
Temperature range		-40 to +200 °C (-40 to 392 °F)	-35 to +200 °C (-31 to +392 °F)	-60 to +350 °C (-76 to +662 °F)
Actuator		Type 31a	Type 31a	Type 31a
Conformity		CE		
Data sheets		▶ **T 10a**	▶ **T 10e**	▶ **T 14b**

Accessories

- Positioners, limit switches, solenoid valves



Type 10a



Type 10e



Type 14b



Type 14b/31a

PTFE or PFA-lined Control Valves

Globe valves · SAMSON PFEIFFER Types 01a, 01b and 06a

Application

Lined control valves to control corrosive liquids in the chemical industry

Special features

- Globe or angle valves with pneumatic actuator
- PTFE or PFA lining
- PTFE lining with min. 5 mm thickness
- PTFE bellows seal

Versions

– **Type 01a:** PTFE-lined globe valve
– **Type 01b:** PFA-lined globe valve
– **Type 06a:** PTFE-lined micro-flow valve with K_{VS} coefficients between 0.005 and 2.5

Technical data

		Type 01a	Type 01b	Type 06a
Body material	DIN	EN-JS 1049		
	ANSI	A395		–
Nominal size	DN	25 to 200	15 to 150	6 to 15
	NPS	1 to 8	½ to 6	–
Lining		PTFE	PFA	PTFE
Pressure rating	PN	10/16	10/16	10
	Class	150	150	–
Connection		For flanges according to DIN EN 1092-2, form B		
Leakage class acc. to IEC 60534-4 or ANSI/FCI 70-2		A according to DIN EN 12266-1, P12 test		
Characteristic		Equal percentage, linear		
Rangeability		30:1	50:1	30:1
Temperature range		-10 to 200 °C (14 to 392 °F)		-10 to 150 °C (14 to 300 °F)
Conformity		CE		
Data sheets		▶ **T 01a**	▶ **T 01b**	▶ **T 06a**

Accessories

Positioner, limit switch, solenoid valve, resistance transmitter, booster valve

Further versions

– With hand-operated actuator



Type 01a



Type 01b



Type 06a

Ball Valves and Pigging Valves

Lined ball valves · SAMSON PFEIFFER Types 20a and 20b

Stainless steel ball valves · SAMSON PFEIFFER Types 22a, 26d and 26s

Pigging valves · SAMSON PFEIFFER Types 28 and 29

Sampling valves · SAMSON PFEIFFER Types 27a, 27c, 27d, 27e and 27f

Application

Tight-closing lined ball valves for process engineering and industrial applications, especially for use with corrosive media

- **Type 20a:** PTFE-lined ball valve
- **Type 20b:** PFA-lined ball valve

Technical data

		Type 20a	Type 20b
Body material	DIN	EN-JS 1049/0.7043	EN-JS 1049/0.7043
	ANSI	A395	A395
Style/end connections		Flanges	Flanges
Nominal size	DN	15 to 200	15 to 200
	NPS	½ to 8	½ to 8
Lining		White PTFE	PFA
Pressure rating	PN	16	16
	Class	150	150
Closure member		PTFE-coated	PFA-coated
Leakage class		A according to DIN EN 12266-1, P12 test	
Temperature range		-10 to +200 °C (14 to 392 °F)	-40 to +200 °C (-40 to +392 °F)
Conformity		CE	
Data sheets		▶ **T 20a**	▶ **T 20b**

Application

Tight-closing ball valves for process engineering and industrial applications, especially for use with corrosive media

- **Type 22a:** Stainless steel tank bottom valve
- **Type 26d:** Stainless steel ball valve



Type 20a



Type 20b

– **Type 26s:** Stainless steel ball valve

Technical data

		Type 22a	Type 26d	Type 26s
Body material	DIN	1.4408, 1.4571	1.4408, 1.4571	1.0619, 1.6220, 1.4408
	ANSI	A182 F316, A351 CF8M	A351 CF8M	A216 WCB/WCC, A352 LCB/LCC, A351 CF8M
Nominal size	DN	50 to 200	15 to 150	15 to 800
	NPS	2 to 8	½ to 4	½ to 32
Pressure rating	PN	16 to 40	16 to 40	10 to 40
	Class	150/300	150/300	150/300
Connecting flanges		According to EN 1092	According to EN 1092-1	According to EN 1092
Ball seal		M-PTFE	TFM	PTFE, HSB
Leakage class		A according to DIN EN 12266-1, P12 test		A/B according to DIN EN 12266-1
Temperature range		-10 to +200 °C (14 to 392 °F)		-196 to +550 °C (-320 to +1022 °F)
Conformity		CE		
Data sheets		**▶ T 22a**	**▶ T 26d**	**▶ T 26s**

Accessories

– Positioner, limit switch, solenoid valve, resistance transmitter

Further versions

– With hand-operated actuator, pneumatic, electric or hydraulic actuator

Application

Pigging valves for the chemical industry used to convey liquids as well as to efficiently pig the pipeline using a minimum amount of solvents

Special features

- Cavity-free passage
- Maintenance-free design
- Version according to DIN 2430

Versions

– **Type 28:** Valves designed as a pig launcher or receiver and for batch pigging

– **Type 29:** Multi-way valves for distribution or connection · Version as 3/4, 5/4 or 7/6-way manifolds

Technical data

		Type 28	Type 29
Body material		1.4408, 1.4571	
Nominal size	DN	50, 80, 100, 125, 150, 200	
Pressure rating	PN	25/40	
Connection		Flanges	
Ball seal		PTFE	
Conformity		CE	
Data sheets		**▶ T 28a, ▶ T 28ax, ▶ T 28e, ▶ T 28m, ▶ T 28t, ▶ T 28u, ▶ T 28y**	**▶ T 29a, ▶ T 29b**



Type 22a



Type 26d



Type 26s

Additionally available:

Turnkey pigging systems including pipework and control engineering

Application

Valves for continuous or intermittent sampling

– **Type 27:** sampling valve

Special features of intermittent sampling:

- No direct exposure to the environment
- Sealing liners allows for sampling free of dead cavities
- Representative samples due to the direct installation of the valve in the pipeline
- Pressureless sampling of liquids
- Known sample quantity per cycle

Technical data

		Type 27a	Type 27c	Type 27d	Type 27e	Type 27f
Body material	DIN	1.4571		EN-JS 1049		1.4571
	ANSI	A351 CF8M				
Nominal size	DN	25 to 100		25 to 80		25 to 50
	NPS	1 to 4		1 to 3		1 to 2
Pressure rating	PN	16 to 40		16		10 to 40
	Class	150 to 300		150		150 to 300
Temperature range		-20 to +200 °C (-4 to +392 °F)		-10 to +200 °C (14 to 392 °F)		-20 to +200 °C (-4 to +392 °F)
Sampling element		Ball		Ball		Needle
Sampling principle		Intermittent	Continuous	Intermittent	Continuous	Continuous
Conformity		CE				
Data sheets		▶ **T 27a**		▶ **T 27d**		▶ **T 27f**

Further versions

– Dead man's control
– Protective casing
– Control or automation (except for Type 27f)
– Other nominal sizes and materials on request



Type 28a



Type 29a



Type 27a



Type 27d



Type 27f

CERA 1000 Ball Valves

Ceramic-lined ball valves · SAMSON CERA SYSTEM Types KST, KSV, KAT and KAV

Ceramic-lined ball valves · SAMSON CERA SYSTEM Types KST, KSV, KAT and KAV

Application

Shut-off and control valve used in chemical and process engineering to control severely abrasive media and corrosive liquids and gases

- **Type KST:** Wear protection, floating ceramic ball, fixed seat rings
- **Type KSV:** Wear protection, floating ceramic ball, fixed seat rings, flanges with HALAR®
- **Type KAT:** Wear protection, floating ceramic ball, fixed/spring-loaded seat rings
- **Type KAV:** Wear protection, floating ceramic ball, fixed/spring-loaded seat rings, flanges with HALAR®

Technical data

		Type KST	Type KSV	Type KAT	Type KAV
Body material (standard)		1.4301/1.4408	1.4301/1.0460	1.4301/1.4408	1.4301/1.0460
Lining (standard)		Al_2O_3	Al_2O_3	Al_2O_3	Al_2O_3
Ball (standard)		ZrO_2	ZrO_2	ZrO_2	ZrO_2
Style/end connections		Flanges	Flanges	Flanges	Flanges
Nominal size	DN	15 to 350	15 to 350	15 to 350	15 to 350
	NPS	½ to 14	½ to 14	½ to 14	½ to 14
Pressure rating	PN	10 to 40	10 to 40	10 to 40	10 to 40
	Class	150 and 300 [1]	150 and 300 [1]	150 and 300 [1]	150 and 300 [1]
Leakage class		IV/V according to IEC 60534-4, A according to DIN EN 12266-1			
Temperature range		-10 to +950 °C (14 to 1742 °F)	-10 to +160 °C (14 to 320 °F)	-10 to +750 °C (14 to 1382 °F)	-10 to +160 °C (14 to 320 °F)
Conformity		CE			
Data sheet		▶ **T 8210**			

[1] Other on request

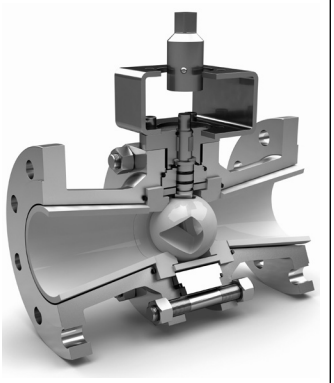

Type KST

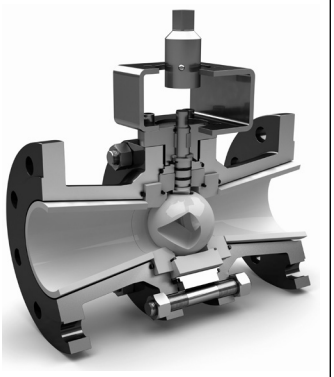

Type KSV

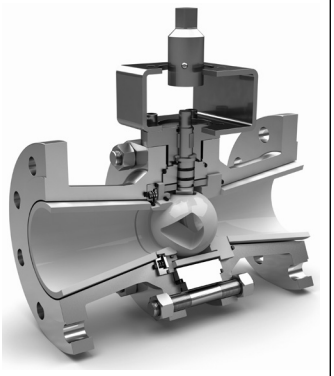

Type KAT

Application

Shut-off and control valve used in chemical and process engineering to control abrasive media and corrosive liquids and gases as well as media which tend to cake to dead spaces

- **Type KGT:** Wear protection, trunnion-mounted ceramic ball, fixed/ spring-loaded seat rings
- **Type KZT:** Wear protection, trunnion-mounted ceramic ball, spring-loaded seat rings

Technical data

		Type KGT	Type KZT
Body material (standard)		1.4301	1.4301
Lining (standard)		Al_2O_3	Al_2O_3
Ball (standard)		ZrO_2	ZrO_2
Style/end connections		Flanges	Flanges
Nominal size	DN	65 to 350	65 to 350
	NPS	2½ to 14	2½ to 14
Pressure rating	PN	10 to 40	10 to 40
	Class	150 and 300 [1)]	150 and 300 [1)]
Leakage class		IV/V according to IEC 60534-4, A according to DIN EN 12266-1	
Temperature range		-10 to +260 °C (14 to 500 °F)	-10 to +260 °C (14 to 500 °F)
Conformity		CE	
Data sheet		▶ **T 8210**	

1) Other on request

Accessories

- Positioner, limit switch, solenoid valve

Further versions

- With hand-operated actuator, pneumatic, electric or hydraulic actuator

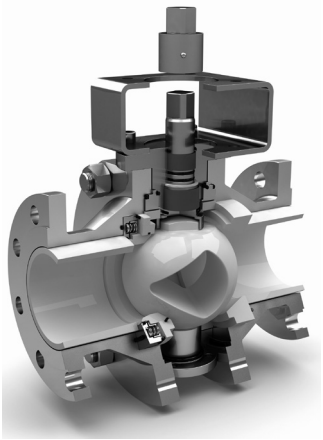

Type KGT

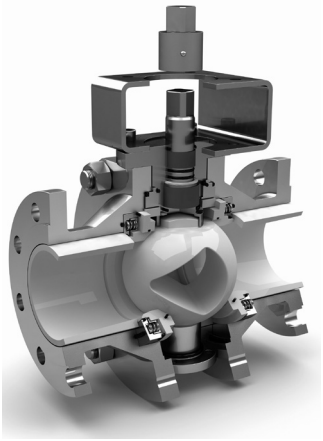

Type KZT

CERA 4300 Ball Valves

Stainless steel ball valves · SAMSON CERA SYSTEM KBR, KBRG and KBRZ

Ball valve · SAMSON CERA SYSTEM KFK/KFL

Application

Shut-off valves for severely abrasive media, preferably used for the pneumatic transport of bulk solids

- **Type KBR:** Floating ball made of hardened metal, spring-loaded seat rings
- **Type KBRG:** Trunnion-mounted ball made of hardened metal, spring-loaded/fixed seat rings
- **Type KBRZ:** Trunnion-mounted ball made of hardened metal, spring-loaded seat rings

Technical data

		Type KBR	Type KBRG	Type KBRZ
Body material (standard)		1.4301	1.4301	1.4301
Seat ring material		1.4462 coated or Al_2O_3		
Ball		1.4112/58 HRC	1.4112/58 HRC	1.4112/58 HRC
Style/end connections		Flanges	Flanges	Flanges
Nominal size	DN	25 to 250	65 to 250	65 to 250
	NPS	1 to 10	2½ to 10	2½ to 10
Pressure rating	PN	10 to 40	10 to 40	10 to 40
	Class	150 and 300 [1]	150 and 300 [1]	150 and 300 [1]
Leakage class		IV/V according to IEC 60534-4, A according to DIN EN 12266-1		
Temperature range		-10 to +450 °C (14 to 842 °F)	-10 to +180 °C (14 to 365 °F)	-10 to +180 °C (14 to 365 °F)
Conformity		CE		
Data sheet		▶ **T 8211**		

[1] Other on request

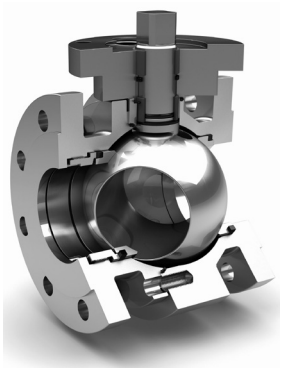

Type KBR

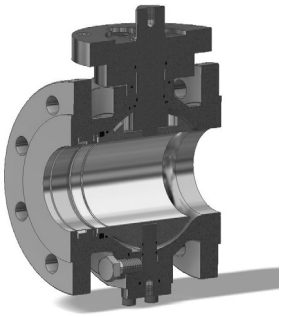

Type KBRG

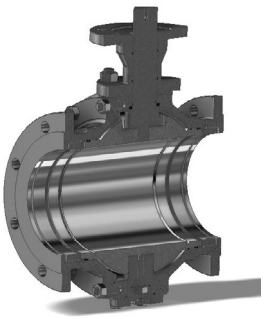

Type KBRZ

Application

Shut-off valve for abrasive media (mainly dusts)

– **KFK/KFL:** Floating ball (trunnion-mounted in DN 65 and larger)

Technical data

	KFK/KFL
Body material (standard)	Forged steel, cast steel
Style/end connections	Flanges
Nominal size DN	25 to 150
Pressure rating PN	10 to 40
Seat ring material	PTFE or PTFE/carbon
Ball	Brass · Steel · Cast iron
Leakage class	IV/V according to IEC 60534-4, A according to DIN EN 12266-1
Temperature range	-10 to +180 °C
Conformity	CE
Data sheet	▶ **T 8211**

Accessories

– Positioner, limit switch, solenoid valve

Further versions

– With hand-operated actuator, pneumatic, electric or hydraulic actuator



Type KFK

CERA 1700 Sliding Disk Valve

Sliding disk valve with ceramic lining · SAMSON CERA SYSTEM Type SSC

Application

Ceramic-lined and ceramic-sealed sliding disk valve for industrial applications with extreme operating conditions The valves have a long service life even with a high switching frequency. They can withstand intensive abrasion in the control position in cases where dead spaces in the valve are not permissible.

– **Type SSC:** Three floating ceramic disks that seal each other; the middle disk moves in a linear motion.

Technical data

		Type SSC
Body material (standard)		1.4301
Liners (standard)		SSiC
Disks (standard)		Al_2O_3
Style/end connections		Flanges
Nominal size	DN	10 to 65
	NPS	⅜ to 2½
Pressure rating	PN	10 to 40
	Class	150 and 300
Leakage class		I and VI according to IEC 60534-4
Temperature range		-10 to +310 °C (14 to 590 °F)
Conformity		CE
Data sheet		▶ **T 8212**

Accessories

– Positioner, limit switch, solenoid valve

Further versions

– With pneumatic, electric or hydraulic actuator

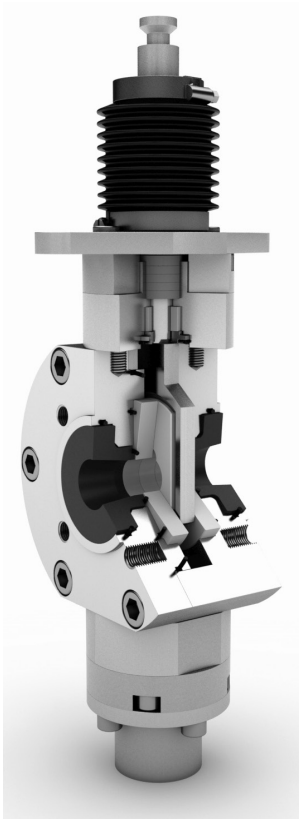

Type SSC

Pneumatic Control Valves

Rotary plug valves · SAMSON VETEC Types 82.7, 82.7-02 (new valve generation) and 72.3

Application

Double-eccentric control valves for process engineering, industrial applications and refineries (DIN and ANSI versions)

- Nominal size DN 25 to 350/NPS 1 to 14 (Type 82.7-02 with rotary valve FTF · New valve generation)
- Nominal size DN 25 to 300/NPS 1 to 12 (Type 82.7 with rotary valve FTF)
- Nominal size DN 25 to 600/NPS 1 to 24 (Type 72.3 with globe valve FTF)
- Pressure rating PN 10 to 40/Class 150 to 300

Special features

- Globe valve with pneumatic, electric or hydraulic rotary actuator and with manual override (manual gear or handwheel)
- Valve body optionally made of cast steel, forged steel, cold-resisting and high-alloy steels or special materials
- Metal seal, soft seal, ceramic seal or high-performance metal seal

Versions (examples)

Rotary plug valves can be operated as follows:

– With Type AT Pneumatic Piston Actuator (Type 31a) ➔ Type 82.7-xx/AT (Type 31a) and Type 72.3/AT (Type 31a) Control Valves

– With Type R Pneumatic Rolling Diaphragm Actuator ➔ Type 82.7-xx/R and Type 72.3/R Control Valves

– With Type MZ Pneumatic Diaphragm Actuator ➔ Type 82.7-xx/MZ and Type 72.3/MZ Control Valves

– With Type MD Pneumatic Diaphragm Actuator ➔ Type 82.7-xx/MD and Type 72.3/MD Control Valves



Type 82.7-02/R
with Type R Actuator and accessories



Type 82.7/AT (Type 31a)
with Type AT or Type 31a Rotary actuator and manual gear



Type 72.3/R
with Type R Rotary Actuator, manual gear and positioner

Technical data

		Type 82.7	Type 82.7-02	Type 72.3
Body material	DIN	1.0619, 1.4408		
	ANSI	A216 WCC, A351 CF8M		
Nominal size	DN	25 to 300	25 to 350	25 to 600
	NPS	1 to 12	1 to 14	1 to 24
Pressure rating	PN	10 to 40		
	Class	150, 300		
Connection		Flanges according to DIN EN 1092-1 and ASME B16.5		
Face-to-face dimension		According to DIN EN 558, Series 36, 15		According to DIN EN 558, Series 1, 15
Leakage class acc. to IEC 60534-4 or ANSI/FCI 70-2	Metal	IV		
	Soft	VI		
Characteristic		Inherent, equal percentage, linear, on/off		
Rangeability		Up to 200:1		
Temperature range	Without insulating section	-40 to +350 °C (-40 to +662 °F)		
	With insulating section IT1	-100 to -40 °C (-148 to -40 °F) and 350 to 500 °C (662 to 932 °F)		
	With insulating section IT2	-196 to -100 °C (-321 to -148 °F)		
Conformity		CE · TSG · EAC		
Data sheets		**▶ T 005.005**	**▶ T 005.005**	**▶ T 005.001**

Further versions

- With packing according to DIN EN ISO 15848-1 (TA Luft)
- With bearing seals for trunnion bearings and shaft
- With double packing (DSB), equivalent to bellows seal; optionally with test connection
- Versions with heating jacket in various versions
- With cleaning connections at plug, trunnion bearing, packing and shaft
- With insulating section IT1 for use with high or low temperatures
- With insulating section IT2 for cryogenic applications
- With noise-reducing measures for gases and liquids
- Control valves to meet higher safety requirements: Types 82.7, 72.3, 72.4 · GAR · DVGW · EN 161

  ➔ Pneumatic control and quick-acting shut-off valves for gases, typetested according to Gas Appliances Regulation (EU) 2016/426 (GAR) and European Gas Appliance Directive, DIN EN 161 and DVGW

Special features

- Particularly high flow capacity (K_{vs}/C_v)
- Excellent control accuracy at an enormous resolution
- Rangeability up to 200:1
- Various K_{vs}/C_v coefficients per nominal size available with full travel range

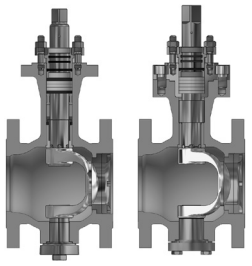

Type 82.7 (left)
Type 82.7-02, new generation (right)

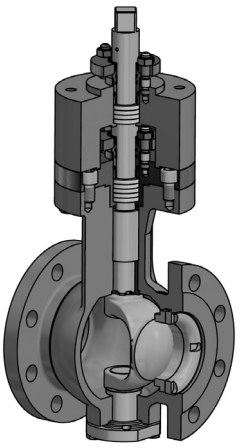

Rotary plug valve with double packing

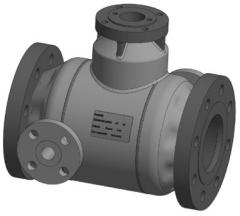

Rotary plug valve with heating jacket

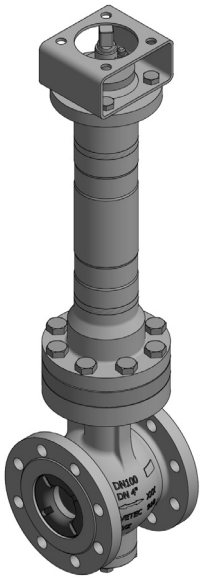

Rotary plug valve with insulating section IT2 for cryogenic applications

Design

- Rugged, compact design
- Durability and maximum resistance to wear
- Double offset according to VDI/VDE 3844
  - Plug lifted out of the seat immediately and without friction
- Double-eccentric plug, unobstructed passage
- Backlash-free keyed connection between shaft and plug
  - Stable, precise control response

Rotary plug valves can be used in throttling or on/off service in many fields of the process industry. The wide variety of versions makes SAMSON VETEC's rotary plug valves suitable for many applications.

- Ideal to control the flow of gases, steam, liquids and media containing solids
- Can be used to handle media that are abrasive, corrosive, sticky, highly viscous and/or contain dirt particles

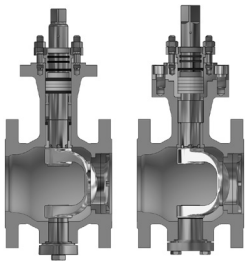

Type 82.7 (left)
Type 82.7-02, new generation (right)

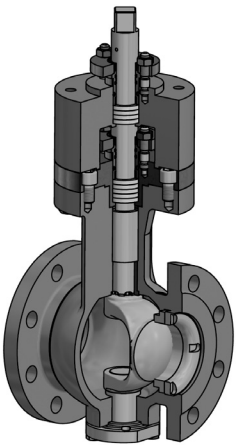

Rotary plug valve with double packing



Rotary plug valve with heating jacket

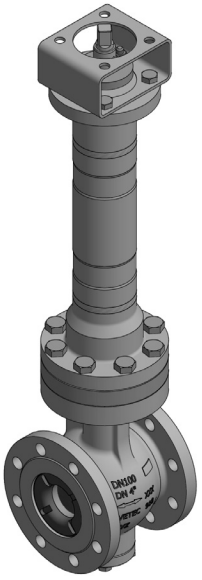

Rotary plug valve with insulating section IT2 for cryogenic applications

Pneumatic Control Valves

High-pressure valve series

Rotary plug valves · SAMSON VETEC Types 73.7 and 73.3

Application

Double-eccentric control valves for process engineering, industrial applications and refineries; according to DIN or ANSI standards

- Nominal size DN 25 to 500/NPS 1 to 20 (Type 73.7 with rotary valve FTF)
- Nominal size DN 25 to 250 (Type 73.3 with globe valve FTF)
- Pressure ratings PN 63 to 160/Class 600 to 900 (higher pressure rating on request)

Special features

- Globe valve with pneumatic, electric or hydraulic rotary actuator and with manual gear
- Valve body optionally made of cast steel, forged steel, cold-resisting and high-alloy steels or special materials
- High-performance metal seal, soft seal or ceramic seal

Versions (examples)

Rotary plug valves can be operated as follows:

– With Type AT Pneumatic Piston Actuator (Type 31a) ➔
Type 73.7/AT (Type 31a) and Type 73.3/AT (Type 31a) Control Valves

– With Type R Pneumatic Rolling Diaphragm Actuator ➔
Type 73.7/R and Type 73.3/R Control Valves

– With Type MZ Pneumatic Diaphragm Actuator ➔
Type 73.7/MZ Control Valve

– With Type MD Pneumatic Diaphragm Actuator ➔
Type 73.7/MD and Type 73.3/MD Control Valves

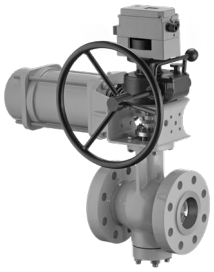

Type 73.7/R
with Type R Rotary Actuator, manual gear and Type 3730 Positioner



Type 73.7/MZ
with Type MZ Rotary Actuator, manual gear and accessories



Type 73.7/MD
with Type MD Rotary Actuator, manual gear and accessories

Technical data

		Type 73.7	Type 73.3
Body material	DIN	1.0619, 1.4408	
	ANSI	A216 WCC, A351 CF8M	
Nominal size	DN	25 to 500	25 to 250
	NPS	1 to 20	–
Pressure rating	PN	63 to 160	
	Class	600, 900 (higher pressure ratings on request)	
Connection		Flanges acc. to DIN EN 1092-1 and ASME B16.5	Flanges acc. to DIN EN 1092-1
Face-to-face dimension		According to DIN EN 558 Tab. 2	
Leakage class acc. to IEC 60534-4 or ANSI/FCI 70-2	Metal	IV	
	Soft	VI	
Characteristic		Inherent, equal percentage, linear, on/off	
Rangeability		Up to 200:1	
Temperature range	Without insulating section	-40 to +350 °C (-40 to +662 °F)	
	With insulating section IT1	-100 to -40 °C (-148 to -40 °F) and 350 to 500 °C (662 to 932 °F)	
	With insulating section IT2 [1]	-196 to -100 °C (-321 to -148 °F)	
Conformity		CE · TSG · EAC	
Data sheets		▶ **T 005.004**	▶ **T 005.003**

[1] Type 73.7 only

Further versions

- With packing according to DIN EN ISO 15848-1 (TA Luft)
- With bearing seals for trunnion bearings and shaft
- With double packing (DSB), equivalent to bellows seal; optionally with test connection
- Versions with heating jacket in various versions
- With cleaning connections at plug, trunnion bearing, packing and shaft
- With insulating section IT1 for use with high or low temperatures
- With insulating section IT2 for cryogenic temperatures (Type 73.7 only)
- With noise-reducing measures for gases and liquids

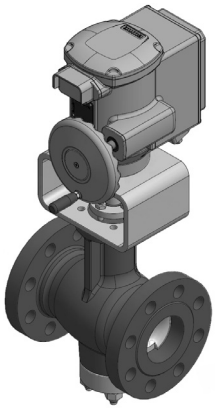

Type 73.7/F with electric rotary actuator

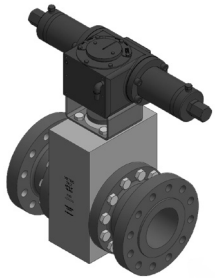

Type 73.7/F
forged steel (bar stock) with hydraulic rack-and-pinion actuator

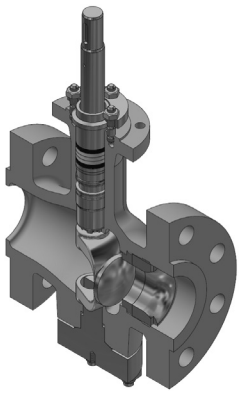

Type 73.7

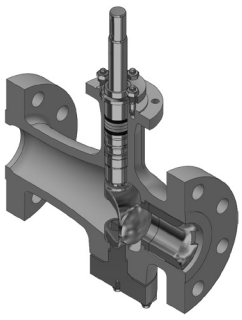

Type 73.3

Application

Double-eccentric rotary plug valve for process engineering and industrial applications. Particularly suitable for the control of clean liquids and gases as well as neutral process media, water treatment and district heating/cooling

Not suitable for media that are sticky, highly viscous, toxic, critical and/or contain dirt particles or solids

- Nominal size DN 25 to 200/NPS 1 to 8 (rotary valve FTF)
- Pressure ratings PN 10 to 40/Class 150, 300

Special features

- Globe valve with Type AT Pneumatic Piston Actuator or electric rotary actuator, optionally with manual override
- Valve body optionally made of cast steel or cast stainless steel
- Metal or soft sealing

Versions (examples)

Rotary plug valves can be operated as follows:

– With Type AT Pneumatic Piston Actuator (Type 31a) ➔ Type 62.7/AT (Type 31a) Control Valve

– With Type PSQ Electric Actuator ➔ Type 62.7/PSQ Control Valve

Technical data

		Type 62.7
Body material	DIN	1.0619, 1.4408
	ANSI	A216 WCC, A351 CF8M
Nominal size	DN	25 to 200
	NPS	1 to 8
Pressure rating	PN	10 to 40
	Class	150, 300
Connection		Flanges according to DIN EN 1092-1/ASME B16.5
Face-to-face dimension		According to DIN EN 558 Tab. 2
Leakage class acc. to IEC 60534-4 or ANSI/FCI 70-2	Metal	IV
	Soft	VI
Characteristic		Inherent, equal percentage, linear, on/off
Medium temperature range		-10 to +220 °C (14 to 428 °F)
Conformity		CE · TSG · EAC
Data sheet		▶ **T 005.047**

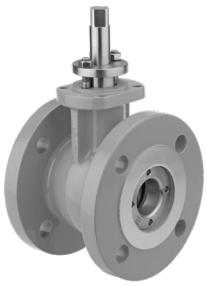

Type 62.7

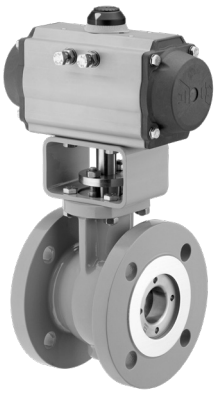

Type 62.7/AT (Type 31a) with Type AT or Type 31a Rotary Actuator

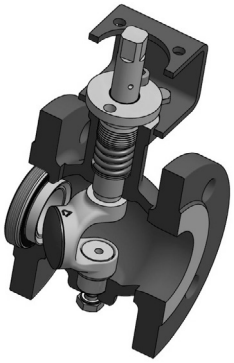

Type 62.7, assembly drawing

Pneumatic Control Valves

Segmented ball valve · Type 3310

Application

Rotary valve for throttling or on/off service in industrial applications with high flow rates

Special features

- Valve body in flanged design made of cast steel, cast stainless steel or special alloys
- Metal or soft-seated segmented ball

Versions

– **Type 3310/SRP/DAP:** Segmented ball valve with single-acting or double-acting Type SRP/DAP Pneumatic Piston Actuator

– **Type 3310/3278:** Segmented ball valve with single-acting Type 3278 Rotary Actuator

Technical data

Version	DIN	ANSI
Body material	1.0619, 1.4408/A216 WCC, A351 CF8M	
Nominal size	DN 25 to 300	NPS 1 to 12
Pressure rating	PN 16 to 40	Class 150/300
Connection	Flanges according to DIN EN 1092-1	Flanges according to ASME B16.5
Leakage class according to ANSI/FCI 70-2	Metal: IV, soft: VI	
Characteristic	Equal percentage, linear	
Rangeability	Equal percentage: ≥400:1 Linear: ≥100:1	
Temperature ranges (standard versions)	1.0619: -10 to +220 °C (14 to 428 °F) 1.4408: -29 to +220 °C (-20 to +428 °F)	-29 to +220 °C (-20 to +428 °F)
Conformity	CE	
Actuator	Type SRP/DAP, Type 3278	
Data sheet	▶ **T 8222-1**	

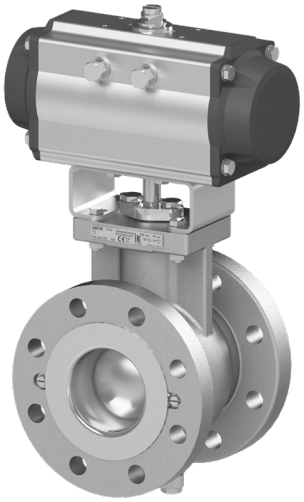

Type 3310 with Type SRP/DAP Actuator

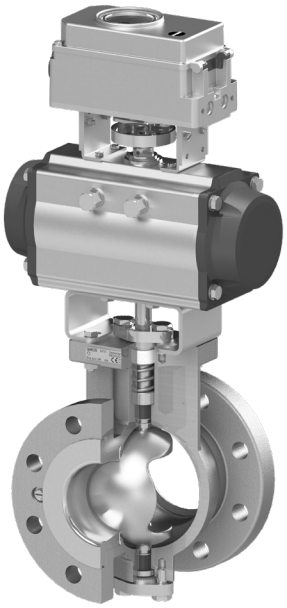

Cutaway view of Type 3310 Segmented Ball Valve with Type SRP Actuator and Type 3730 Positioner

Further versions

- With various valve seat versions
  - Soft seal: PTFE or PEEK
  - Metal seal: ARCAP® or enhanced
- With double packing, with or without leak monitoring
- With insulating section for a wider temperature range
- With form-fit flanges
- With pneumatic rotary actuator and additional handwheel
- With manual override
- With heating jacket
- With gaskets and lubricants in compliance with FDA/EC 1935/NSF H1
- With additional seals for protection of the bearing
- Version for oxygen service (GOX) up to 13.8 bar

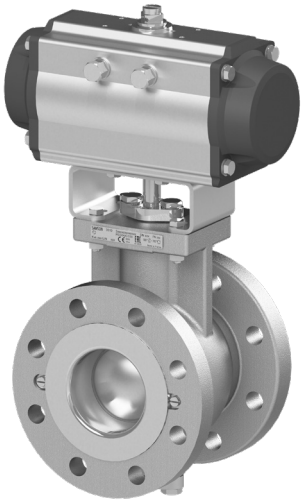

Type 3310 with Type SRP/DAP Actuator

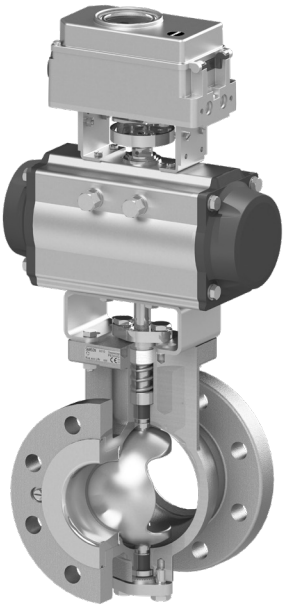

Cutaway view of Type 3310 Segmented Ball Valve with Type SRP Actuator and Type 3730 Positioner

Series V2001 Valves

Control valves with pneumatic or electric actuator

Globe valve · Type 3321

Three-way valve · Type 3323

Application

Control valves designed for mechanical and plant engineering. Suitable for liquids, gases and steam
Optionally as globe or three-way valve according to DIN or ANSI standards

Versions

- **Type 3321/3323-IP:** Electropneumatic control valve
  Type 3725 Positioner, tight-closing function, 4 to 20 mA set point, max. 6 bar supply air, fail-safe action
- **Type 3321/3323-PP:** Pneumatic control valve
  Pneumatic actuator with fail-safe action
- **Type 3321/3323-E1:** Electric control valve
  Type 5827 Electric Actuator for 230/50 Hz and 24 V/50 Hz
- **Type 3321/3323-E3:** Electric control valve
  Type 3374 Electric Actuator for 230 V/50 Hz, 24 V/50 Hz, optionally with fail-safe action and/or positioner

Technical data

		Type 3321 (globe valve)	Type 3323 (three-way valve)
Body material	DIN	EN-GJL-250, EN-GJS-400-18-LT, 1.0619, 1.4408	
	ANSI	A216 WCC, A351 CF8M, A126 B	
Nominal size	DN	15 to 100	15 to 100
	NPS	½ to 4	½ to 4
Pressure rating	PN	16 to 40	
	Class	150, 300	
Connection	DIN	Flanges according to EN 1092	
	ANSI	Flanges RF/FF	
Leakage class acc. to IEC 60534-4 or ANSI/ FCI 70-2		Metal seal: IV Soft seal: VI	Metal seal: I (0.05 % K_{VS})
Characteristic		Inherent	Linear
Rangeability		Up to 50:1	
Temperature range		-10 to +300 °C (14 to 572 °F)	
Conformity		CE	
Actuators		Versions for Types 3321/3323-IP, -PP, -E1, -E3	
Data sheets		**▶ T 8111, ▶ T 8112**	**▶ T 8113, ▶ T 8114**

Further versions

- With insulating section
- With flow divider ST 1 for noise reduction (on request)



Type 3321-IP
with 350 cm² actuator and Type 3725 Positioner (hardware version GI:00)



Type 3323-E1 with Type 5827 Actuator

Series V2001 Valves

Control valves with pneumatic or electric actuator

Globe valve for heat transfer oil · Type 3531

Three-way valve for heat transfer oil · Type 3535

Application

Control valves for heat transfer applications using organic media according to DIN 4745
Optionally as globe or three-way valve according to DIN or ANSI standards

Versions

- **Type 3531/3535-IP:** Electropneumatic control valve for heat transfer oil
  Type 3725 Positioner, tight-closing function, 4 to 20 mA set point, max. 6 bar supply air, fail-safe action
- **Type 3531/3535-PP:** Pneumatic control valve for heat transfer oil
  Pneumatic actuator with fail-safe action
- **Type 3531/3535-E1:** Electric control valve for heat transfer oil
  Type 5827 Electric Actuator for 230/50 Hz and 24 V/50 Hz
- **Type 3531/3535-E3:** Electric control valve for heat transfer oil
  Type 3374 Electric Actuator for 230 V/50 Hz, 24 V/50 Hz, optionally with fail-safe action and/or positioner



Type 3535-E3 with Type 3374 Actuator

Technical data

		Type 3531 (globe valve)	Type 3535 (three-way valve)
Body material	DIN	EN-GJS-400-18-LT, 1.0619, 1.4408	
	ANSI	A216 WCC, A351 CF8M	
Nominal size	DN	15 to 80	
	NPS	½ to 3	
Pressure rating	PN	25	
	Class	150	
Connection	DIN	Flanges according to EN 1092	
	ANSI	Flanges RF	
Leakage class acc. to IEC 60534-4 or ANSI/FCI 70-2		Metal seal: IV	Metal seal: I (0.05 % K_{VS})
Characteristic		Equal percentage	Linear
Rangeability		50:1	Up to 50:1
Temperature range		-10 to +350 °C (14 to 660 °F), on request: up to -70 °C (-94 °F)	
Conformity		CE	
Actuators		Versions for Types 3531/3535-IP, -PP, -E1, -E3	
Data sheets		**▶ T 8131, ▶ T 8132**	**▶ T 8135, ▶ T 8136**

Further versions

- Explosion-protected version with electric actuator (on request)

Electric and Pneumatic Control Valves

Globe valves · Types 3213, 3214, 3222, 3222 N and 3260

Three-way valves · Types 3260 and 3226

Application

Globe and three-way valves for heating, ventilation and air-conditioning combined with the following actuators:
- Electric actuators
- Electric actuators with process controllers
- Pneumatic actuators

The electric actuators with process controller have an integrated digital controller. The controlled variable is measured by a directly connected Pt1000 sensor and the output signal is transferred to the actuator stem as the positioning force.

Recommended valve/electric actuator combinations

Actuator	Type 5827	Type 5857	Type 3374 [1]
Globe valve in nominal size DN			
Type 3213	15 to 50 [2]	15 to 25	–
Type 3214	15 to 50	–	65 to 250
Type 3222	15 to 50	15 to 25	–
Type 3222 N	–	15	–
Type 3260	–	–	65 to 150
Three-way valve in nominal size DN			
Type 3226	15 to 50	15 to 25	–
Type 3260	15 to 80	15 to 25	65 to 150

[1] Electric globe valves tested according to DIN EN 14597 with Type 5827-A or Type 3374 Actuator (with "actuator stem extends" fail-safe action), see Data Sheet ▶ **T 5869**

[2] DN 15 to 25 with PN 25 pressure rating, DN 32 to 50 with PN 16 pressure rating

Recommended valve/electric actuator with process controller combinations

Actuator	TROVIS 5724-3	TROVIS 5725-3 [1]	TROVIS 5757-3	TROVIS 5757-7	TROVIS 5724-8	TROVIS 5725-8
Globe valve in nominal size DN						
Type 3213	15 to 50 [2]	15 to 50 [2]	15 to 25	–	15 to 50 [2]	15 to 50 [2]
Type 3214	15 to 50	15 to 50	–	–	15 to 50	15 to 50
Type 3222	15 to 50	15 to 50	15 to 25	15 to 25	15 to 50	15 to 50
Type 3222 N	–	–	15	15	–	–
Three-way valve in nominal size DN						
Type 3226	–	–	–	15 to 25	15 to 50	15 to 50
Type 3260	–	–	–	15 to 25	15 to 50	15 to 50

[1] The TROVIS 5725-3 and 5725-8 Actuators combined with the listed globe valves are tested according to DIN EN 14597 (for "actuator stem extends" fail-safe action), see Data Sheet ▶ **T 5869**.

[2] DN 15 to 25 with PN 25 pressure rating, DN 32 to 50 with PN 16 pressure rating



Type 3213 with Type 5827 Actuator



Type 3214 with Type 3374 Actuator



Type 3260 with Type 5827 Actuator

Recommended valve/pneumatic actuator combinations

Actuator	Type 2780-1	Type 2780-2	Type 3271	Type 3277	Type 3372
Globe valve in nominal size DN					
Type 3213	15 to 50 [1)]	15 to 50 [1)]	–	–	–
Type 3214	–	65 to 100	–	–	–
Type 3222	15 to 50	15 to 50	–	–	–
Type 3222 N	–	–	–	–	–
Type 3260	–	–	65 to 150	65 to 150	65, 80
Three-way valve in nominal size DN					
Type 3226	15 to 50	15 to 50	–	–	–
Type 3260	15 to 50	15 to 50	65 to 300	65 to 80	65 to 150

[1)] DN 15 to 25 with PN 25 pressure rating, DN 32 to 50 with PN 16 pressure rating



Type 3222/5827



Type 3226/5827



Type 3214/5827

Type 3213 and Type 3214 Globe Valves
Technical data

Globe valve		Type 3213	Type 3214
Body material		EN-GJL-250 EN-GJS-400-18-LT	EN-GJL-250 EN-GJS-400-18-LT 1.0619
Nominal size	DN	15 to 50	15 to 400
Pressure rating	PN	16, 25	16 to 40
Connection	DIN	Flanges	
Seat-plug seal Leakage class according to IEC 60534-4		I	I
Temperature range		Up to 200 °C	Up to 220 °C
Conformity		CE	
Data sheets		**▶ T 5868, ▶ T 5869**	

Type 3222 and Type 3222 N Globe Valves
Technical data

Globe valve		Type 3222	Type 3222 N
Body material		Red brass CC499K, EN-GJS-400-18-LT	Brass, CW602N
Nominal size	DN	15 to 50	15
Pressure rating	PN	25	16
Connection	DIN	Welding ends, threaded ends, flanges, female thread	ISO 228/1-G ¾ B, welding ends, threaded ends, soldering ends
Leakage class according to IEC 60534-4		I	
Temperature range		Up to 200 °C	Up to 120 °C
Conformity		CE	
Data sheets		**▶ T 5866**	**▶ T 5867**

Further versions

– Type 3222: globe valve with balanced plug

Type 3260 and Type 3226 Three-way Valves
Technical data

		Type 3260 Globe valve	Type 3260 Three-way valve	Type 3226 Three-way valve
Body material		EN-GJL-250		Red brass CC499K
Nominal size	DN	65 to 150	15 to 300	15 to 50
Pressure rating	PN	16		25
Connection	DIN	Flanges		Welding ends, threaded ends, flanges, female thread
Leakage class according to IEC 60534-4		IV		
Max. medium temperature		150 °C		
Conformity		CE		
Data sheets		▶ **T 5862**	▶ **T 5861**	▶ **T 5863**

Further versions

– Type 3226 also available as DVGW version in PN 10 for temperatures up to 90 °C



Type 3222/5757 with welding ends



Type 3222 N/5757



Type 3226/5757 with female thread



Type 3226/5724 with female thread

Application

Single-acting linear actuators for control valves used in process engineering and industrial applications as well as in heating, ventilation and air-conditioning systems, especially for attachment to SAMSON Types 3213, 3222, 3321, 3531, 3226, 3260, 3323, 3535 Valves and valves of the Series 240, 250, 280, 290 and 590.

Special features

- Diaphragm actuators with internal compression springs
- Fail-safe action "Actuator stem extends" or "Actuator stem retracts"
- Easily reversible direction of action
- Low friction due to rolling diaphragm
- Direct attachment to Type 3277 guarantees accurate attachment of accessories as well as concealed linkage

Versions

– **Type 3277:** Pneumatic actuator for direct attachment of a positioner, limit switch or position transmitter

– **Type 3271:** Pneumatic actuator with diaphragm areas from 120 cm² used for the micro-flow valve up to 2x 2800 cm² with tandem actuators

Technical data

		Type 3271 · Type 3277		
Actuator area	cm²	350	175v2, 350v2, 355v2, 750v2	120
Diaphragm [1]		Clamped-in	Full	–
Max. supply pressure	bar	6 [2]		
Rated travel	mm	7.5 to 30		
Fail-safe action		Reversible		
Temperature range with diaphragm material	NBR	-35 to +90 °C [3], [5]	-35 to +90 °C [3], [5]	-35 to +80 °C [3], [5]
	EPDM	-50 to +120 °C [4], [5]	–	–
	PVMQ	–	-60 to +90 °C [5]	–
Materials				
Actuator stem		Stainless steel		
Actuator stem sealing		NBR	NBR	NBR
		EPDM	EPDM	
Painted diaphragm cases		Sheet steel		Die-cast aluminum
Data sheet		▶ **T 8310-1**		



Type 3277 for direct attachment



Type 3271 Actuator



Type 3277-5 Actuator (120 cm²) with Type 3510 Valve and Type 3725 Positioner (hardware version GI:00)

		Type 3271			
Actuator area	cm²	1000	1400-60	1400-120	1400-250
Max. supply pressure	bar	6	6	6	6
Rated travel	mm	Up to 60 mm	Up to 60 mm	Up to 120 mm	Up to 250
Fail-safe action		Reversible	Reversible	Reversible	Reversible
Temperature range with diaphragm material	NBR	-35 to +90 °C	-35 to +90 °C	-35 to +90 °C	-35 to +90 °C
	PVMQ	-60 to +90 °C	–	-60 to +90 °C	-60 to +90 °C
Materials					
Actuator stem		Stainless steel			
Actuator stem sealing		NBR	NBR	NBR	NBR
		EPDM	EPDM	PVMQ	PVMQ
Housing		Sheet steel, painted	Sheet steel, plastic-coated	Painted cast steel	Spheroidal graphite iron
Data sheets		▶ **T 8310-2**	▶ **T 8310-3**	▶ **T 8310-2**	▶ **T 8310-8**

		Type 3271
Actuator area	**cm²**	**2800, 2x 2800**
Max. supply pressure	bar	6
Rated travel	mm	Up to 120 mm
Fail-safe action		Reversible
Temperature range with diaphragm material	NBR	-35 to +90 °C
	PVMQ	-60 to +90 °C
Materials		
Actuator stem		Stainless steel
Actuator stem sealing		NBR
		PVMQ
Housing		Painted cast steel
Data sheet		▶ **T 8310-2**

1) **v2** is added to the diaphragm area (e.g. 175v2 cm²) to indicate actuators with a full diaphragm
2) Observe supply pressure restrictions (▶ **T 8310-1**)
3) In on/off service, lowest temperature restricted to -20 °C
4) In on/off service, lowest temperature restricted to -40 °C
5) Install vent plug for temperatures below -20 °C. See Application Notes ▶ **AB 07** for details on vent plugs

Further versions

– With additional handwheel or travel stop for Types 3277 and 3271 Actuators

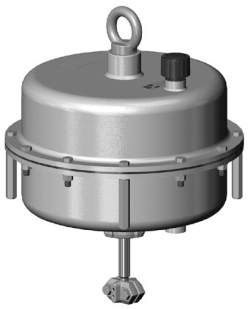

Type 3271 (1000 cm²)

Pneumatic Actuators for the Food and Pharmaceutical Industries

Pneumatic actuator · Type 3379

Application

The Type 3379 Pneumatic Actuator (with spring-return mechanism) is used in conjunction with a valve suitable for the food and pharmaceutical industries.

Special features

- Can be combined with Type 3347 Hygienic Valve, Type 3349 Aseptic Valve or Type 3321CT Globe Valve
- Smooth stainless steel surfaces for easy cleaning
- All moving parts located inside the housing to improve safety
- Visual indicator for the valve position
- Internal air routing to prevent air or water from entering the device

Versions

– **Type 3379:** With 63 mm piston diameter and 31 cm² actuator area
With 90 mm piston diameter and 63 cm² actuator area
With 150 mm piston diameter and 176 cm² actuator area

Technical data

		Type 3379					
Piston diameter	**mm**	**63**	**90**		**150**		
Actuator area	**cm²**	**31**	**63**		**176**		
Rated travel	mm	15					
Ambient temperature range		0 to 60 °C (32 to 140 °F)					
Max. supply pressure	bar	8 [1]					
Fail-close version							
No. of springs		1	1	2	3	4	6
Control pressure	bar	4	4.5	6	4	4	4.5
Rated travel	bar	2.3 to 3.7	2.5 to 4.0	3.3 to 5.6	1.0 to 2.3	1.4 to 3.0	2.1 to 4.6
Thrust	N	710	1510	2330	1760	2280	3690
Fail-open version							
No. of springs		1	1	2	3	3	
Control pressure	bar	6	4	6	4	6	
Pressure rating	bar	2.3 to 3.7	1.0 to 1.9		1.0 to 2.3		
Thrust	N	680	1320	2580	2990	6500	
Documentation		▶ **EB 8315**					

[1] Versions with Type 3724 Positioner and with Type 4740 Limit Switch restricted to 7 bar



Type 3379



Type 3379
with Type 3724 Positioner
mounted on Type 3347 Valve

Pneumatic Actuators

Pneumatic rotary actuators · Type 3278 and SAMSON PFEIFFER Type 31a

Application

Pneumatic actuators for butterfly valves and other final control elements with rotating closure member. Suitable for throttling or on/off service.

Special features

- Various signal pressure ranges
- Attachment of positioners, limit switches or solenoid valves and other accessories according to VDI/VDE 3845
- Travel stops externally adjustable to limit the opening angle
- No special tools required for mounting and conversion

Versions

– **Type 3278:** Single-acting pneumatic rotary actuator with rolling diaphragm and internal compression springs, operating direction (fail-open or fail-close) as required

– **Type 31a:** Pneumatic piston actuator with clearance-free power transmission achieved by using involute gearing and special surface finish

SRP - single acting with fail-safe action

DAP - double acting without fail-safe action



Type 3278 with butterfly valve and positioner



Type 31a

Technical data

	Type 3278	Type 31a	
Version and principle of operation	Single-acting	SRP Single-acting	DAP Double-acting
Connection	Key drive	Square drive	
Diaphragm area/size	Diaphragm area 160 cm², 320 cm²	Size 15 to 10000	
Max. supply pressure bar	6	10	
Opening angle	90°	90°/120°/180°	
Fail-safe action	Reversible	Reversible	Without
Temperature range	-35 to +90 °C	-40 to +80 °C	
With special material		-15 to +150 °C, -55 to +80 °C	
Materials			
Housing	EN-JS1049	EN AW 6063	
Diaphragm/piston	NBR	EN AW 6063	
Data sheets	▶ **T 8321**	▶ **T 31a**	

Accessories

– The pneumatic actuators can be equipped with positioners, limit switches, resistance transmitters and solenoid valves.

Further versions

– With additional handwheel

Application

Electric actuators designed for valves used in heating, ventilation and air-conditioning systems as well as in process engineering and industrial energy transfer systems

Versions

- **Type 5827:** Electric actuator, optionally with fail-safe action
- **Type 5857:** Electric actuator
- **Type 3374:** Electric actuator, optionally with fail-safe action

Technical data · Types 5827, 5857 and 3374

		Type 5827	Type 5857	Type 3374
Rated travel	mm	6, 12, 15	6	15, 30
Thrust	N	500 [1], 700	300	2000 [1], 2500, 3000 [1], 5000
Fail-safe action		–/•	–	–/•
Manual override		• [2]	•	•
Supply voltage [3]		230 V, 50 Hz 24 V, 50 Hz	230 V, 50 Hz 24 V, 50 Hz	230 V, 50 Hz 24 V, 50 Hz
Ambient temperature range		0 to 50 °C		5 to 60 °C
Additional electrical equipment				
Positioner		Digital	Digital	Digital
Limit contacts		2	–	2
Resistance transmitters		1	–	2
Conformity		CE		
Data sheets		▶ **T 5827**	▶ **T 5857**	▶ **T 8331**

1) Version with fail-safe action
2) Type 5827-Axx: only with Allen key after opening the cover
3) Different for version with positioner

Further versions

- Type 5827 and Type 3374 with fail-safe action "actuator stem extends" is tested by the German technical surveillance association TÜV according to DIN EN 14597 in combination with different SAMSON valves.



Type 5827-N



Type 5827-A



Type 5857



Type 3374-11



Type 3374-15

Electric Actuators with Process Controllers

DHW heating
TROVIS 5724-3 · TROVIS 5725-3 with fail-safe action · TROVIS 5757-3

Heating and cooling applications
TROVIS 5757-7, TROVIS 5724-8 · TROVIS 5725-8 with fail-safe action

Application

Electric actuators with integrated digital controller for heating, ventilation and air-conditioning systems · TROVIS 5724-8 and TROVIS 5725-8 also suitable for light industrial applications

Special features

- Linear actuator with integrated digital controller
- Easy installation
- Torque switches
- Temperature measured by Pt1000 sensor
- Configuration, parameterization, diagnostic function and direct connection for monitoring using the TROVIS-VIEW software
- Data transmission using a memory pen

Versions for domestic hot water heating

– **TROVIS 5724-3, TROVIS 5725-3:** Designed for DHW heating in instantaneous heating systems for small to medium-sized buildings connected to local supply or district heating networks.

Suitable for Types 3213, 3214 and 3222 Valves in DN 15 to 50.

TROVIS 5725 with fail-safe action

Further details can be found in ▶ **T 5724**.

– **TROVIS 5757-3** Suitable for Types 3222, 3222 N and 2488 Valves in DN 15 to 25.

Further details can be found in ▶ **T 5757**.

Version for heating and cooling applications

– **TROVIS 5757-7:** Designed for installations in small to medium-sized buildings for outdoor-temperature-compensated control, fixed set point control or fixed set point control with room temperature sensors.

Suitable for Types 3222, 3222 N, 3226, 2488 and 3260 Valves in DN 15 to 25.

Further details can be found in ▶ **T 5757-7**.

– **TROVIS 5724-8, TROVIS 5725-8:** Universal process control unit with two PID control modules for fixed set point, follow-up, override and cascade control · Fast start-up using system code numbers · Ready-wired sensors and control line · Communication over Modbus RTU · Suitable for Types 3213, 3214, 3260, 3222 and 3226 Valves in DN 15 to 50

Further details can be found in ▶ **T 5724-8**.



TROVIS 5725



TROVIS 5757-3



TROVIS 5757-7



TROVIS 5724-8

Accessories for communication

- TROVIS-VIEW software
- Memory pen-64 (order no. 1400-9753)
- Connecting cable (order no. 1400-7699)
- Modular adapter (order no. 1400-7698)
- USB/RS-232 adapter (order no. 8812-2001)

Accessories for domestic hot water heating
(ready-wired in TROVIS 5724-8 and TROVIS 5725-8)

- Type 5207-0060 Pt1000 Sensor (fast response)
- Sensor pocket (order no. 1400-9249)
- Water flow sensor (order no. 1400-9246)

Accessories for heating and cooling applications

- Type 5267-3 Contact Sensor (Pt1000)
- Type 5257-71 Room Panel (Pt1000) with potentiometer and mode selector switch
- Type 5227-4 Outdoor Sensor (Pt1000)
- Mounting kit for a Pt1000 cable sensor as contact sensor, order no. 100000722
- Brass thermowell, G ½, 80 mm immersion length, PN 16, order no. 1099-0807
- Stainless steel thermowell, G ½, 80 mm immersion length, PN 40, order no. 1099-0805
- Stainless steel thermowell, G ½, 250 mm immersion length, PN 40, order no. 1099-0806
- Brass thermowell, G ½, 160 mm immersion length, PN 16, order no. 8525-5005
- Stainless steel thermowell, G ½, 160 mm immersion length, PN 40, order no. 8525-5011



TROVIS 5725



TROVIS 5757-3



TROVIS 5757-7



TROVIS 5724-8

Ex
certified

Application

Positioners for attachment to pneumatic control valves

Versions

– **Type 3766, Type 3767:** Positioners for direct attachment to Type 3277 Actuators as well as for attachment according to IEC 60534 or for attachment to rotary actuators according to VDI/VDE 3845



Type 3766 with
Type 6116 i/p Converter (Ex d)

Technical data

	Type 3766	Type 3767
Principle of operation		
Pneumatic	•	–
Electropneumatic	–	•
Rated travel mm	7.5 to 120	
Opening angle	Up to 90°	
Set point		
0.2 to 1 bar	•	–
1 to 5 mA	–	•
Supply Supply air	1.4 to 6 bar (20 to 90 psi)	
Output Max. output pressure	0 to 6 bar (0 to 90 psi)	
Characteristic	Linear	
Ambient temperature range	-40 to +80 °C	
Degree of protection	IP54/IP65/NEMA 4X	
Conformity	CE	
Explosion protection (see data sheet for detailed information on national and international certification)		
Intrinsic safety Ex i	•	•
Flameproof enclosure Ex d	• [1]	• [2]
Additional electrical equipment		
Limit contact	2 (inductive)	
Solenoid valve	24 V DC	
Options		
Data sheet	▶ **T 8355**	

[1] Flameproof enclosure in combination with Type 6116 i/p Converter

[2] Flameproof enclosure in combination with Type 3770 Field Barrier

Electronic and Digital Positioners

Electropneumatic positioners · TROVIS 3730-1, Types 3725 and 3730-0
Electropneumatic positioners (HART®) · TROVIS 3730-3, TROVIS 3793, Types 3731-3 and 3730-6
Electropneumatic positioner (PROFIBUS-PA) · Type 3730-4
Electropneumatic positioners (FOUNDATION™ fieldbus) · Types 3730-5 and 3731-5
Electropneumatic positioner (PROFINET®) · TROVIS 3797
EXPERTplus valve diagnostics · Type 3770 Field Barrier

Ex certified

Application

Single-acting or double-acting positioners for attachment to pneumatic linear or rotary actuators. Self-calibrating, automatic adaptation to the control valve (except for Type 3730-0), for SAMSON direct attachment, attachment to NAMUR rib or attachment to rod-type yoke according to IEC 60534 as well as attachment to rotary actuators according to VDI/VDE.

Electropneumatic positioners (see overview on p. 106 for technical data)

- **Type 3725:** Positioner for attachment to pneumatic globe and rotary valves
- **Type 3730-0:** Low-priced positioner version for all globe valves. Travel range setting over DIP switches
- **TROVIS 3730-1:** Positioner from the latest generation of positioners. No-wear, non-contact position sensing for attachment to pneumatic globe and rotary valves. On-site operation using a rotary pushbutton and display Start-up with automatic initialization procedure, configuration options over serial interface and the TROVIS-VIEW software, optional additional functions, such as limit contacts or position feedback. Housing same as Type 3730-x (identical mounting dimensions).

Electropneumatic positioners with HART® communication (see overview on p. 106 for technical data)

- **Type 3731-3:** Flameproof electropneumatic positioner, local communication with SSP interface, operable on site with LCD, integrated EXPERTplus valve diagnostics
- **Type 3730-6:** Electropneumatic positioner with pressure sensors
- **TROVIS 3730-3:** Positioner from the latest generation of positioners. No-wear, non-contact position sensing for attachment to pneumatic globe and rotary valves. On-site operation over rotary pushbutton, multilingual plain-text display. Start-up with automatic initialization procedure, additionally with integrated EXPERTplus valve diagnostics. Configuration options over serial interface and the TROVIS-VIEW software, optional additional functions, such as limit contacts or position transmitter. Housing identical to Type 3730-x (identical attachment dimensions).
- **TROVIS 3793:** Electropneumatic positioner in modular design, with high air capacity, on-site operation over rotary pushbutton, multilingual plain-text display, start-up with automatic initialization procedure, additionally with integrated EXPERTplus valve diagnostics, configuration options over serial interface and the TROVIS-VIEW software, optional additional functions, such as limit contacts, position feedback or binary inputs and outputs, retrofittable as option modules, pressure sensors



TROVIS 3730-1, Type 3730-x



TROVIS 3730-3



TROVIS 3793



Type 3725

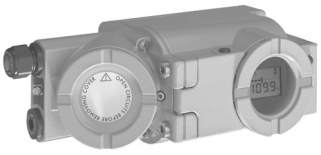

Type 3731-3

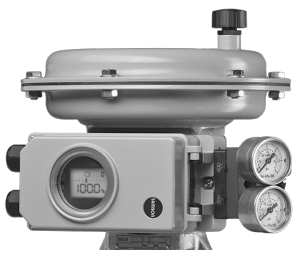

TROVIS 3730-1, direct attachment

Positioners with PROFIBUS-PA communication

– **Type 3730-4:** Universal electropneumatic positioner with LCD and on-site operation over rotary pushbutton for globe valves and rotary valves, start-up with automatic initialization procedure, additionally with integrated EXPERTplus valve diagnostics, configuration options over serial interface and the TROVIS-VIEW software, transmission technology according to IEC 61158-2, Profile Class B (version 3.0)

Electropneumatic positioners with FOUNDATION™ fieldbus communication

– **Type 3730-5:** Positioner same as Type 3730-4, IEC 61158-2 transmission technology

Integrated function blocks: PID Process Controller, Analog Output (AO), two Discrete Inputs (DI) and Link Master Capability

– **Type 3731-5:** Flameproof, bus-powered positioner with communication according to FOUNDATION™ fieldbus specification, integrated EXPERTplus valve diagnostics

Electropneumatic positioners with PROFINET® communication

– **TROVIS 3797:** – Electropneumatic positioner in modular design, with high air capacity, on-site operation over rotary pushbutton, multilingual plain-text display, start-up with automatic initialization procedure, additionally with integrated EXPERTplus valve diagnostics, configuration options over serial interface and the TROVIS-VIEW software, optional additional functions, such as limit contacts, position feedback or binary inputs and outputs, retrofittable as option modules, pressure sensors



TROVIS 3793,
attachment to Type 3241 Valve



TROVIS 3797

Technical data · Overview of electropneumatic positioners

	Type 3725	Type 3730-0	TROVIS 3730-1	TROVIS 3730-3	Type 3730-4	
Rated travel mm	3.75 to 50	5.3 to 200	3.5 to 300	3.6 to 300	3.6 to 300	
Opening angle	24 to 100°	–	24 to 100°	24 to 100°	24 to 100°	
Set point	4 to 20 mA	4 to 20 mA	4 to 20 mA	4 to 20 mA	Bus	
Supply air	1.4 to 7 bar (20 to 105 psi)	1.4 to 7 bar (20 to 105 psi)	1.4 to 7 bar (20 to 105 psi)	1.4 to 7 bar (20 to 105 psi)	1.4 to 7 bar (20 to 105 psi)	
Max. signal pressure output	0 to 7 bar (0 to 105 psi)	0 to 7 bar (0 to 105 psi)	0 to 7 bar (0 to 105 psi)	0 to 7 bar (0 to 105 psi)	0 to 7 bar (0 to 105 psi)	
Characteristic	Adjustable	Linear	Adjustable	Adjustable	Adjustable	
Ambient temperature range	-25 to +80 °C	-45 to +80 °C	-55 to +85 °C	-55 to +85 °C	-45 to +80 °C	
Degree of protection	IP66	IP66/NEMA 4X	IP66/NEMA 4X	IP66/NEMA 4X	IP66/NEMA 4X	
Communication	–	–	–	HART®	PROFIBUS	
Explosion protection (see data sheet for detailed information on national and international certification)						
Intrinsic safety Ex i	•	•	•	•	•	
Non-sparking equipment Ex ec	–	–	•	•	•	
Protection by enclosure Ex t	–	•	•	•	•	
Flameproof enclosure Ex d	–	–	–	–	–	
Additional electrical equipment						
Limit contact	–	–	•	•	•	
Position transmitter	–	–	•	•	–	
Forced venting	–	–	–	•	–	
External position sensor	–	–	–	•	•	
Analog input	–	–	–	–	–	
Binary input	–	–	–	•	•	
Binary output	–	–	–	•	–	
Conformity	CE					
Data sheets	▶ **T 8394**	▶ **T 8384-0**	▶ **T 8484-1**	▶ **T 8484-3**	▶ **T 8384-4**	

[1] Flameproof enclosure in combination with Type 3770 Field Barrier

	Type 3730-5	Type 3730-6	Type 3731-3	Type 3731-5	TROVIS 3793	TROVIS 3797
	3.6 to 300	3.6 to 300	3.6 to 200	3.6 to 200	3.6 to 300	3.6 to 300
	24 to 100°	24 to 100°	24 to 100°	24 to 100°	24 to 170°	24 to 170°
	15 mA	4 to 20 mA	4 to 20 mA	Bus	4 to 20 mA	Bus
	1.4 to 7 bar (20 to 105 psi)	1.4 to 7 bar (20 to 105 psi)	1.4 to 6 bar (20 to 90 psi)	1.4 to 6 bar (20 to 90 psi)	2.5 to 10 bar (30 to 150 psi)	2.5 to 10 bar (30 to 150 psi)
	0 to 7 bar (0 to 105 psi)	0 to 7 bar (0 to 105 psi)	0 to 6 bar (0 to 90 psi)	0 to 6 bar (0 to 90 psi)	0 to 10 bar (0 to 150 psi)	0 to 10 bar (0 to 150 psi)
	Adjustable	Adjustable	Adjustable	Adjustable	Adjustable	Adjustable
	-45 to +80 °C	-45 to +80 °C	-40 to +80 °C	-40 to +80 °C	-55 to +85 °C	-40 to +85 °C
	IP66/NEMA 4X	IP66/NEMA 4X	IP66/NEMA 4X	IP66/NEMA 4X	IP66	IP66
	FOUNDATION™ field-bus	HART®	HART®	FOUNDATION™ field-bus	HART®	PROFINET®
	•	•	•	•	•	•
	•	•	–	–	•	–
	•	•	•	•	•	–
	–	•[1)]	•	•	–	–
	•	•	–	–	•	•
	–	•	•	–	•	–
	–	•	•	•	•	•
	•	•	–	–	–	•
	–	–	–	–	•	–
	•	•	•	•	•	•
	–	–	•	–	•	•
	CE					
	▶ **T 8384-5**	▶ **T 8384-6**	▶ **T 8387-3**	▶ **T 8387-5**	▶ **T 8493**	▶ **T 8497**

TROVIS-VIEW

Universal configuration and user interface for various smart SAMSON instruments, such as positioners, industrial and heating controllers, electric actuators, electric actuators with process controller and differential pressure meters.

Go to the following link to download the TROVIS-VIEW software free of charge:

▶ **www.samsongroup.com > Downloads > Software & Drivers > TROVIS-VIEW**

▶ **T 6661** for further information.

Positioner	Operation using TROVIS-VIEW
TROVIS 3730-1	•
TROVIS 3730-3	•
TROVIS 3793	•
TROVIS 3797	•
Type 3725	–
Type 3730-0	–
Type 3730-4	•
Type 3730-5	•
Type 3730-6	•
Type 3731-3	•
Type 3731-5	•

EXPERTplus valve diagnostics

Firmware for Series 3730, 3731 and 3793 Positioners for early recognition of valve faults, issuing recommended action for predictive maintenance. The full scope of diagnostic functions is completely integrated into the positioner (▶ **T 8389** or ▶ **T 8389-1**).
The SAMSON TROVIS-VIEW software (▶ **T 6661**) and FDT/DTM engineering tools allow operation and compiled data to be viewed.

Type 3770 Field Barrier with explosion protection Ex d/Ex i

Field barrier with flameproof enclosure serving as an interface between intrinsically safe and non-intrinsically safe circuits in hazardous areas. Suitable for operating positioners, smart positioners with HART® communication, i/p converters, solenoid valves or limit switches (▶ **T 8379**).



Type 3770

Digital Positioners for Safety-instrumented Systems

Electropneumatic positioners (HART®) · TROVIS SAFE 3730-6, TROVIS SAFE 3731-3 and TROVIS SAFE 3793

Ex
certified

Application

Single-acting or double-acting positioners for attachment to pneumatic linear or rotary actuators. Self-calibrating, automatic adaptation to the control valve. Discrete analysis of the set point with automated partial stroke testing. Use in safety-instrumented systems according to IEC 61511 up to SIL 2 (single device/ HFT = 0) and SIL 3 (redundant configuration/HFT = 1)

- **TROVIS SAFE 3730-6:** Positioner same as Type 3730-6 with special use for control of on/off valves in safety-instrumented systems
- **TROVIS SAFE 3731-3:** Flameproof positioner same as Type 3731-3 with special use for control of on/off valves in safety-instrumented systems
- **TROVIS SAFE 3793:** Positioner same as TROVIS 3793 with special use for control of on/off valves in safety-instrumented systems

Technical data

	TROVIS SAFE 3730-6	TROVIS SAFE 3731-3	TROVIS SAFE 3793
Rated travel	3.6 to 300 mm	3.6 to 200 mm	3.6 to 300 mm
Opening angle	24 to 100°	24 to 100°	24 to 170°
Set point	4 to 20 mA	4 to 20 mA	4 to 20 mA
Communication	HART®	HART®	HART®
Supply air	1.4 to 7 bar (20 to 105 psi)	6 bar (105 psi)	2.5 to 10 bar (30 to 150 psi)
Max. signal pressure output	7 bar (105 psi)	6 bar (105 psi)	10 bar (150 psi)
Characteristic	Adjustable	Adjustable	Adjustable
Ambient temperature range	-45 to +80 °C	-40 to +80 °C	-55 to +85 °C
Degree of protection	IP66/NEMA 4X	IP66/NEMA 4X	IP66
Partial stroke testing	•	•	•
Explosion protection (see data sheet for detailed information on national and international certification)			
Intrinsic safety Ex i	•	•	•
Protection by enclosure Ex t	•	•	•
Flameproof enclosure Ex d	•[1)]	•	

TROVIS SAFE



TROVIS SAFE 3730-6



TROVIS SAFE 3731-3



TROVIS SAFE 3793

	TROVIS SAFE 3730-6	TROVIS SAFE 3731-3	TROVIS SAFE 3793
Additional electrical equipment			
Limit contact	•	–	•
Position transmitter	•	•	•
Solenoid valve	•	–	–
Forced venting	•	•	•
External position sensor	•	–	•
Analog input	–	–	•
Binary input	•	•	•
Binary output	–	•	•
Conformity	CE		
Data sheets	▶ **T 8384-6S**	▶ **T 8387-3S**	▶ **T 8493S**

[1] Flameproof enclosure in combination with Type 3770 Field Barrier

TROVIS SAFE



TROVIS SAFE 3730-6



TROVIS SAFE 3731-3



TROVIS SAFE 3793

Electronic Positioners for the Food and Pharmaceutical Industries

Electropneumatic positioner · Type 3724 combined with Type 3379 Pneumatic Actuator

Application

Single-acting positioner combined with Type 3379 Pneumatic Actuator. Self-calibrating, automatic adaptation to valve and actuator.

Special features

- Compact unit by combining it with Type 3379 Pneumatic Actuator
- Can be combined with Type 3347 Hygienic Valve, Type 3349 Aseptic Valve or Type 3321CT Globe Valve
- Smooth, robust stainless steel surfaces
- Valve position reading easy to read
- Internal air routing with automatic purging of the spring chamber
- Modified PID controller for high control accuracy
- Easy, intuitive operation using keys and an LCD
- Two software limit contacts

Version

– **Type 3724:** Electropneumatic positioner with on-site operation and LCD

Technical data

	Type 3724
Rated travel	4 to 16 mm, adjustable in steps of 0.5 mm
Set point	4 to 20 mA
Supply Air quality acc. to ISO 8573-1	Supply air: 1.4 to 7 bar (20 to 105 psi) Maximum particle size and density: Class 4, oil content: Class 3 Pressure dew point: Class 3 or at least 10 K below the lowest ambient temperature to be expected
Air consumption, steady state	Independent of supply air, approx. 110 l_n/h
Signal pressure (output)	0 bar up to the supply pressure minus 0.4 bar Can be limited to approx. 2.3 bar by software
Characteristic	Adjustable
Ambient temperature range	-20 to +80 °C
Degree of protection	IP65 [1], only applies in combination with Type 3379 Pneumatic Actuator
Conformity	CE·EAC
Additional electrical equipment	
Limit contact	Two software limit contacts (min., max.), reverse polarity protection, galvanic isolation
Data sheet	▶ **T 8395**

[1] In preparation



Type 3724 (cover removed)



Type 3724 with Type 3379 Actuator

Valve Accessories

Limit switches · Types 4746, 4747, 3776, 4744 and 3768
Supply pressure regulators · Types 4708 and 7029 · SAMSTATION
Solenoid valves · Types 3962, 3963, 3967 and 3969
Pneumatic lock-up valve · Type 3709
Reversing amplifier · Type 3710
Pneumatic volume booster · Type 3755
Quick exhaust valve · Type 3711
Air receiver tank/emergency air supply · Type 7510

Ex certified

Limit switches

Limit switches issue an electric or pneumatic signal when an adjusted limit value is exceeded or not reached.

Versions

- **Type 4746-x2:** Inductive limit switch
- **Type 4746-x3:** Electric limit switch
- **Type 4746-x4:** Pneumatic limit switch
- **Type 4747:** Inductive or mechanical limit switch with explosion protection
- **Type 4744:** Electric limit switch with explosion protection

Technical data

	Type 4746			Type 4747		Type 4744	
Version	-x2	-x3	-x4	-1	-2	–	-2
Rated travel mm	7.5 to 180			7.5 to 200		7.5 to 150	15
Opening angle	–			0 to 100		–	
Ambient temperature range	-50 to +100 °C	-40 to +85 °C	-20 to +60 °C	-25 to +80 °C	-40 to +80 °C	-55 to +70 °C	-20 to +75 °C
Conformity	CE						
Switching element							
Inductive	•	–	–	•	•	–	–
Electric	–	•	–	–	•	•	•
Pneumatic	–	–	•	–	–	–	–
Explosion protection (see data sheet for detailed information on national and international certification)							
Intrinsic safety Ex i	•	•	•	•	–	–	–
Non-sparking equipment Ex nA	•	•	–	–	–	–	–
Protection by enclosure Ex t	–	–	–	•	•	•	–
Flameproof enclosure Ex d	–	–	–	–	•	•	•
Data sheets	▶ **T 8365**			▶ **T 4747**		▶ **T 8367**	



Type 4746



Type 4747

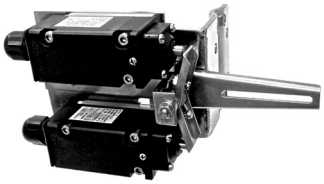

Type 4744 (cover removed)

Versions

- **Type 3776-0:** Inductive or electric limit switch
- **Type 3776-1:** Limit switch with explosion protection
- **Type 3768:** Inductive limit switch

Technical data

	Type 3776	Type 3768
Version	-x	-x
Rated travel mm	7.5 to 120	7.5 to 120
Opening angle	0 to 90/180°	–
Ambient temperature range	-45 to +80 °C	-45 to +80 °C
Optional internal solenoid valve	•	•
Conformity	CE	
Switching element		
Inductive	•	•
Mechanical	•	–
Electronic	–	–
Explosion protection (see data sheet for detailed information on certification)		
Intrinsic safety Ex i	•	•
Non-sparking equipment Ex nA	•	•
Protection by enclosure Ex t	–	–
Data sheets	▶ **T 3776**	▶ **T 8356**



Type 3776



Type 3768

Type 4708 Supply Pressure Regulator

Supply pressure regulators provide pneumatic control instruments with a constant air supply. The supply pressure regulator reduces and controls the pressure of a compressed air network to the pressure adjusted at the set point adjuster. Versions are available for installation in pipelines or control panels or for direct attachment to positioners or pneumatic actuators. The air pressure reducing station consists of a supply pressure regulator and an upstream filter with condensate drain.

Type 4708-45 Supply Pressure Regulator: with increased air capacity

Technical data

Type	**4708-xx**
Max. operating pressure	12 bar (174 psi)
Set point range	0.2 to 1.6 bar (3 to 24 psi), 0.5 to 6 bar (8 to 90 psi)
Version	Glass-fiber-reinforced polyamide, aluminum or stainless steel body
Ambient temperature range	Depending on version: -25 to +80 °C (standard), -50 to +80 °C (low-temperature version)
Air filtering	15 to 20 µm mesh size (5 µm as special version)
Options	Pressure gauge, manual/automatic switchover for positioners
Conformity	CE EAC
Data sheet	▶ **T 8546**



Type 4708-53



Type 4708-45

SAMSTATION Type 7029 Supply Pressure Regulator

Supply pressure regulator to provide pneumatic measuring and control equipment with a constant supply pressure, set point range from 0.5 to 6 bar (8 to 90 psi)

- Low air consumption
- Pneumatic connections G ¼ or ¼-18 NPT
- Installation into the pipeline
- Pressure reading on a pressure gauge (optional)
- Transparent filter housing (optional)
- 5 µm filter (optional)
- Protective cap to cover the set point screw (accessories)

Versions

– **Type 7029:** With/without pressure gauge, with/without filter receptacle

Technical data

	Type 7029
Supply pressure	1 to 12 bar (15 to 180 psi)
Set point range	0.5 to 6 bar (8 to 90 psi)
Ambient temperature range	-20 to +60 °C
Dependency on inlet pressure	<150 mbar/Δp = 1 bar
Reversing error	100 to 400 mbar (depending on set point)
Hysteresis	<100 mbar
Filter cartridge mesh size	20 µm
Connection	G ¼ or ¼-18 NPT
Body/cover material	PA glass fiber reinforced
Data sheet	▶ **T 8546-2**

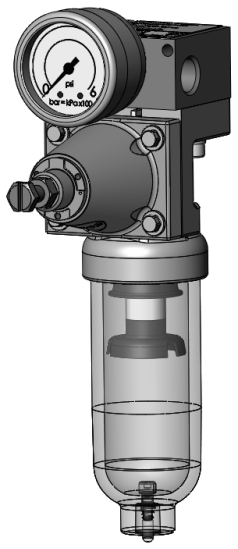

Type 7029 with pressure gauge and filter receptacle

Type 3967, Type 3969, Type 3962 and Type 3963 Solenoid Valves

Solenoid valves for high operational reliability and short actuating times for controlling pneumatic actuators also in hazardous areas. Mounting using NAMUR interface according to VDI/VDE 3845 or VDI/VDE 3847, NAMUR rib according to IEC 60534 and customized hook-up A variety of device versions to suit individual applications are available due to the various switching functions, flow rates and different connections. The solenoid valves with NAMUR interface according to VDI/VDE 3845 or VDI/VDE 3847 are compatible with the SAMSON's modular design system (see Application Notes ▶ **AB 11**).

Technical data

		Type 3967 [2]		Type 3969 [3]	
		No explosion protection	**With explosion protection**	**No explosion protection**	**With explosion protection**
Nominal signal	V DC	6/12/24		14 to 24	
	V AC	–	–	–	
Power consumption [1]		6 to 27 mW		71 mW	
Supply		1.4 to 10 bar		1.4 to 10 bar	
Output signal		Max. 10 bar		Max. 10 bar	
Service life		Up to 2 x 10^7 switching cycles		Up to 2 x 10^7 switching cycles	
Ambient temperature range		-45 to +80 °C		-45 to +80 °C	
Explosion protection (see data sheet for detailed information on national and international certification)					
Intrinsic safety Ex i			•		•
Non-sparking equipment Ex nA			•		•
Protection by enclosure Ex t			•		•
Increased safety Ex e					•
Conformity		CE · EAC		CE	
Data sheets		▶ **T 3967**		▶ **T 3969**	

		Type 3962		Type 3963	
		No explosion protection	**With explosion protection**	**No explosion protection**	**With explosion protection**
Nominal signal	V DC	24	24/115/230	6/12/24	6/12/24
	V AC	24/115/230	24/115/230	115/230	–
Power consumption [1]		2.7 to 3.9 W	1.8 to 3 W	6 to 27 mW	
		3.6 to 5.2 VA	5 to 9.5 VA	0.04 to 0.46 VA	
Supply		1.4 to 10 bar		1.4 to 6 bar	
Output signal		Max. 10 bar		Max. 10 bar	
Service life				Up to 2 x 10^7 switching cycles	
Ambient temperature range		-45 to +80 °C		-45 to +80 °C	
Conformity		CE · EAC		CE	
Explosion protection (see data sheet for detailed information on national and international certification)					
Intrinsic safety Ex i			–		•
Non-sparking equipment Ex nA			–		•
Increased safety Ex e			•		–
Flameproof enclosure Ex d			•		–
Data sheets		▶ **T 3962**		▶ **T 3963**	

[1] Depending on nominal signal
[2] Permanent air purging of the actuator's spring chamber
[3] No air consumption



Type 3967



Type 3969 (K_{VS} 4.3)



Type 3962



Type 3963

Type 3709 Pneumatic Lock-Up Valve

The pneumatic lock-up valve shuts off the signal pressure line either when the air supply falls below an adjusted value or upon complete air supply failure. This causes the actuator to remain in its last position. All versions are available either in stainless steel or aluminum.

Versions

- Type 3709-01: Pneumatic lock-up valve for direct attachment to a positioner
- Type 3709-02: Pneumatic lock-up valve for installation in the signal pressure line in any position as required
- Type 3709-04: Pneumatic lock-up valve with booster for installation in the signal pressure line as required with connecting thread
- Type 3709-05, Type 3709-06: Pneumatic lock-up valve with booster for attachment to single-acting rotary actuators according to VDI/VDE 3845, input hook-up as required
- Type 3709-07, Type 3709-08: Pneumatic lock-up valve with booster for attachment to single-acting rotary actuators according to VDI/VDE 3845, input for attachment of Type 3967 Solenoid Valve with NAMUR interface according to VDI/VDE 3845
- Type 3709-09, Type 3709-10: Pneumatic lock-up valve with booster for attachment to single-acting rotary actuators according to VDI/VDE 3845, sandwich-style assembly with attachment according to VDI/VDE 3845
- Type 3709-12: Pneumatic lock-up valve with booster for attachment to double-acting actuators for installation in the signal pressure line in any position as required
- Type 3709-13: Pneumatic lock-up valve with booster for attachment to double-acting actuators according to VDI/VDE 3845

Technical data

	Type 3709-01	**Type 3709-02**
Attachment	Positioner	Hooked up as required
Max. supply pressure	12 bar	12 bar
Max. output pressure	6 bar	6 bar
K_{VS} coefficient approx.	0.2	0.2
Set point range (adjustable)	0.5 to 6 bar	0.5 to 6 bar
Ambient temperature range	-25 to +80 °C	
	-45 to +80 °C	
Data sheet	▶ **T 8391**	

	Pneumatic lock-up valve with booster				
Type 3709	**-04**	**-05**	**-06** [1]	**-07**	**-08** [1]
Attachment	Hooked up as required	Input hooked up as required		Type 3967 Solenoid Valve according to VDI/VDE 3845	
According to VDI/VDE 3845	–	•	•	•	•
Max. supply pressure	6 bar				
Max. output pressure	6 bar				
K_{VS} coefficient approx.	4.3	2.0	4.3	2.0	4.3
Set point range (adjustable)	1.5 to 6 bar				
Ambient temperature range	-45 to +80 °C				
Data sheet	▶ **T 8391**				

[1] On request



Type 3709-01



Type 3709-04



Type 3709-07

Type 3709	Pneumatic lock-up valve with booster			
	-09	-10	-12 [1]	-13 [1]
Attachment	Sandwich style		Hooked up as required	
According to VDI/ VDE 3845	•	•	–	•
Max. supply pressure	6 bar			
Max. output pressure	6 bar			
K_{VS} coefficient approx.	2.0	4.3	4.3	4.3
Set point range (adjustable)	1.5 to 6 bar			
Ambient temperature range	-45 to +80 °C			
Data sheet	▶ **T 8391**			

[1] On request



Type 3709-01



Type 3709-04



Type 3709-07

Type 3710 Reversing Amplifier

Reversing amplifier to operate a double-acting pneumatic actuator using a single-acting pneumatic or electropneumatic positioner (e.g. Series 3730 and 3731 Positioners). The positioner is mounted either with or without pressure gauge.

	Type 3710
Max. supply pressure	6 bar
K_V coefficient Supply	0.11
K_V coefficient Exhaust	0.12
Connections	¼-18 NPT, ISO 228/1-G ¼
Degree of protection	IP65
Ambient temperature range	-25 to +80 °C (-13 to +176 °F)
Low-temperature version	-50 to +80 °C (-58 to +176 °F) -60 to +80 °C (-76 to +176 °F)
Conformity	CE
Option	
Pressure gauge Ø 40 mm	0 to 6 bar (0 to 90 psi)
Data sheet	▶ **T 8392**

Type 3755 Pneumatic Volume Booster

The pneumatic volume booster is mounted between the positioner and actuator. It supplies the actuator with an air flow output whose pressure corresponds exactly to the signal pressure, except that it has a much higher volume output.

- Fast dynamic response due to low hysteresis
- Bypass restriction with linear characteristic
- Sintered polyethylene filter disk ensures low noise emissions
- Constant reversing pressure
- Exhaust air feedback possible
- Version with G or NPT thread

Versions

– **Type 3755-1:** Pneumatic volume booster (aluminum body) with low-noise sintered polyethylene filter disk

– **Type 3755-2:** Pneumatic volume booster (aluminum body) with flanged-on threaded exhaust port

– **Type 3755-2:** Pneumatic volume booster (stainless steel body), threaded exhaust port

Technical data

	Type 3755-1	Type 3755-2
K_{VS} Supply	2.5	2.5
K_{VS} Exhaust	2.5	2.5
K_{VS} Bypass	0.3	0.3
Pressure ratio	Signal: output = 1:1	
Response pressure	Standard temperature range: 80 mbar Low temperature range: 100 mbar	
Max. supply pressure	10 bar (145 psi)	
Max. actuator pressure	7 bar (101.5 psi)	
Max. signal pressure	7 bar (101.5 psi)	
Ambient temperature range	Standard temperature range: -40 to +80 °C Low temperature range: -55 to +60 °C	
Degree of protection	IP44	IP66
Service life	≥1 x 10^7 full travel cycles	
Data sheet	▶ **T 8393**	



Type 3710



Type 3755-1



Type 3755-2



Type 3755-2 (stainless steel body)

Type 3711 Quick Exhaust Valve

The Type 3711 Quick Exhaust Valve is mounted between the positioner or solenoid valve and the actuator. It is used to vent the actuator more quickly.

- Compact design
- Flow coefficient: K_V 10.0
- Closing hysteresis of check valve < 0.02 bar
- Integrated restriction to adjust the dynamic response

Technical data

	Type 3711
Operating pressure	0 to 7 bar
Differential pressure between air supply and exhaust	55 % of control pressure
K_{VS} Exhaust	10.0 [1]
K_{VS} Supply	1.3 (restriction screw closed)
	1.9 (restriction screw open)
Max. K_{VS} Bypass	0.75
Perm. leakage at 6 bar	≤25 l_n/h
Ambient temperature range	-40 to +80 °C
Closing hysteresis of check valve	<0.02 bar
Weight	Approx. 0.5 kg [1]
Body material	Aluminum, stainless steel
Conformity	CE
Data sheet	▶ **T 8547**

[1] Without muffler

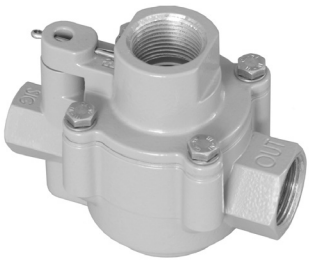

Type 3711

Type 7510 Air Receiver Tank/Emergency Air Supply

Application

– **Instrument air tank**

Instrument air tanks guarantee the supply of compressed air. Including shut-off valve, check valve or pneumatic lock-up valve at the supply air connection as well as pressure gauge, pressure switch for monitoring the supply pressure and safety valve for pressure safeguarding; delivered as turnkey system

– **Air receiver tank (emergency air supply)**

Air receiver tank to compensate for pressure fluctuations in instrument air or as emergency air supply to supply pneumatic control equipment after the instrument air supply fails



Type 7510

Versions

- Compressed air tanks ranging from 10 to 20 liters for direct mounting on the valve or horizontal or vertical compressed air tanks ranging from 20 to 750 liters
- Maximum operating pressure 11 bar
- Tanks made of steel with painted or primed exterior and corrosion-protected interior (stainless steel also available)
- Connections with threaded fittings or flanges
- Pressure vessel approval according to 2014/68/EU (European Pressure Equipment Directive) or ASME approval
- Supply air inlet fitted with check valve or pneumatic lock-up valve A shut-off valve can also be fitted on request.
- Optionally with pressure gauge, pressure switch for monitoring the pressure or safety valve for emergency pressure relief
- Other versions on request

Data sheet ▶ **T 3974**

Converters

i/p converters · Types 6111, 6116 and 6126

p/i converters · Types 6132 and 6134

Ex
certified

Application

Used to convert direct current signals or pneumatic signals

Versions

Electropneumatic converters accept a current signal from electric control equipment and convert it into a pneumatic signal for measuring or control tasks.

- **Type 6111:** i/p converter, rail-mounting unit for supply air manifold or stainless steel field unit
- **Type 6116:** i/p converter, field unit
- **Type 6126:** i/p converter, industrial unit

Technical data

	Type 6111	Type 6116	Type 6126
Input	0/4 to 20 mA	0/4 to 20 mA	0/4 to 20 mA, 0/2 to 10 V
Output	0.2 to 1 bar [1]		
Output signal	Max. 8 bar		Max. 5 bar
Supply	0.4 bar higher than upper signal pressure range value [2]		
	Max. 10 bar		Max. 5.4 bar
Ambient temperature range	-20 to +70 °C	-30 to +60°C, -40 to +70 °C Special version: -45 °C	-25 to +70 °C
Degree of protection	IP20, IP65	IP54, IP65	IP54, IP65
Conformity	CE		
Explosion protection (see data sheet for detailed information on national and international certification)			
Intrinsic safety Ex i	•	•	–
Non-sparking equipment Ex nA	•	–	–
Flameproof enclosure Ex d	–	•	–
Data sheets	▶ **T 6111**	▶ **T 6116**	▶ **T 6126**

[1] Further ranges in data sheet

[2] Restricted pressure ranges for explosion-protected devices (see data sheet)



Type 6111, rail-mounting unit



Type 6111, stainless steel enclosure



Type 6116, field unit



Type 6126
with pressure gauge

p/i converters accept a pneumatic signal from control equipment and convert it into an electric signal.

- **Type 6132:** p/i converter for four-wire connection, available as rail-mounting unit
- **Type 6134:** p/i converter for two-wire connection, available as either a rail-mounting or field unit

Technical data

	Type 6132 (four-wire)	Type 6134 (two-wire)	
Explosion-protected version	–	–	Ex ia/Ex d
Input	0.2 to 1 bar		
Output	0/4 to 20 mA 0/2 to 10 V	4 to 20 mA	
Supply voltage	230, 115, 24 V AC 24 V DC	12 to 30 V DC	
Ambient temperature range	-20 to +70 °C	-20 to +70 °C	
Degree of protection	IP20		IP54 IP65
Conformity	CE		
Data sheets	▶ **T 6132**	▶ **T 6134**	



Type 6132-04, rail-mounting unit



Type 6134-03, field unit



Type 6134-04, rail-mounting unit

Media Series

Differential pressure, flow and liquid level meters
Media 5 · Media 05

Application

Instruments designed to measure differential pressure and measured variables derived from it. Suitable for liquids, gases and vapors

- Liquid level meters for cryogenic service
- Liquid level measurement in pressure vessels, especially for cryogenic gases
- Differential pressure measurement between flow and return pipe
- Pressure drop measurement across valves and filters
- Flow rate measurement according to the differential pressure method

Properties

- Suitable for field installation and panel mounting
- Directly connected valve block
- Zero adjustment from the front
- Limit switch easily retrofitted
- Optionally with 4 to 20 mA current output

Versions

– With differential pressure cell made of brass (CW617N) or CrNi steel
– With scales: linear, square, according to DIN 19204, detachable, special
– With inductive limit switch with up to three alarm contacts

Technical data

	Media 5	Media 05
Pressure rating	PN 50, overloadable on one side up to 50 bar	
Measuring range	0 to 3600 mbar	
Degree of protection	IP54	
Ambient temperature range	-40 to +80 °C	
Characteristic	Reading linear to the differential pressure	
Indicator Ø	160 mm	100 mm
Conformity	CE	
Data sheets	▶ **T 9519**	▶ **T 9520**

Materials

dp-cell	CW617N (brass) or CrNi steel
Indicator housing unit	Polycarbonate
Springs, diaphragm plates and functional parts	CrNi steel
Measuring diaphragm and seals	ECO, NBR, FKM, EPDM

Special versions on request



Media 5 with limit switches, valve block and pressure gauge for operating pressure

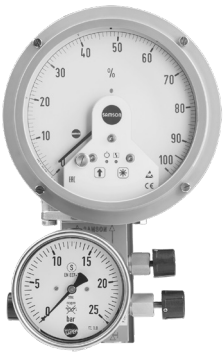

Media 5 with 4 to 20 mA current output (optional)

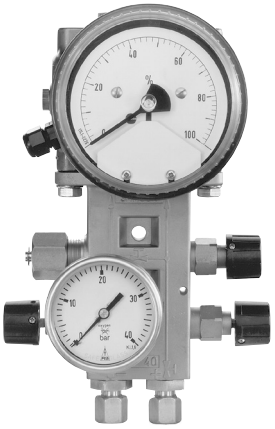

Media 05 with limit switches, valve block and pressure gauge for operating pressure

Media Series

Microprocessor-controlled transmitter for differential pressure with remote data transmission
Media 7

Application

Microprocessor-controlled transmitter with dp-cell for measuring and indicating the differential pressure, pressure or measured variables derived from them

Special features

- Modular design: easy to install or exchange optional additional functions by inserting option modules (four slots in the device)
- Internal absolute pressure sensor
- Modular power supply unit with standby power supply (SPS)
- 4" graphics display with backlighting
- Certification for Zone 0 (flammable gases and liquids)
- Configuration and programming using the TROVIS-VIEW software
- Easy operation using capacitive keys, start-up wizard

Versions

– Two-wire version: 4 to 20 mA signal supplied from a current source
– 24 V version: wider ambient temperature range, illuminated display

Technical data

	Media 7
Pressure rating	PN 60, overloadable on one side up to 60 bar
Measuring range	0 to 3600 mbar
Characteristic	Differential pressure proportional to the tank geometry
Deviation from terminal-based linearity	<±1.6 % (including hysteresis)
Sensitivity	≤0.25 % or <±0.5 % depending on measuring span selected
Internal absolute pressure sensor	Measuring range: 0 to 60 bar; deviation from terminal-based linearity: <0.4 %
Display	LCD 128 x 64 (90 x 40 mm)
Degree of protection	IP67
Ambient temperature range	-20 to +70 °C (-40 to +70 °C with heating)
Two-wire version	Output: 4 to 20 mA
24 V version	Input: 12 to 36 V DC, output: 12 V DC
Communication	Local: SSP interface and serial interface adapter
Conformity	CE
Data sheet	▶ **T 9510**

Materials

dp-cell housing	Brass CW617N-H070
Housing, device cover	UV-stabilized polycarbonate
Springs and diaphragm plate	Corrosion-resistant steel



Media 7 with valve block and pressure gauge for operating pressure

Measuring and Control Station

Measuring and control station · Type 7400

Application

For use in simple control applications with one or two control loops in combination with control valves by SAMSON Group companies.

Versions

- **Type 7400:** measuring and control station
  Special features:
  - Ready-to-connect equipment
  - For one or two control loops
  - Ready-wired for temperature or pressure control
  - 24 V or 230 V version
  - Installation directly in the plant
  - No external set point required
  - Set point input possible
  - On-site installation for shorter cables
  - Customized switching cabinets/special versions on request

Type	Mat. no.	Analog inputs	Analog outputs	Supply voltage	Control (setting)
7400-01	100147091	2x AI (4 to 20 mA)	1x AO (4 to 20 mA)	90 to 230 V AC	One control circuit (fixed set point control for pressure)
7400-02	100147092		2x AO (4 to 20 mA)		2 control loops (fixed set point control for pressure)
7400-03	100147093				
7400-04	100147094		1x AO (4 to 20 mA)	24 V AC/DC	One control circuit (fixed set point control for pressure)
7400-05	100147095		2x AO (4 to 20 mA)		2 control loops (fixed set point control for pressure)
7400-06	100147096				
7400-11	100173614	2x AI (Pt100/ Pt1000)	1x AO (4 to 20 mA)	90 to 230 V AC	One control circuit (fixed set point control for temperature)
7400-12	100173616		2x AO (4 to 20 mA)		2 control loops (fixed set point control for temperature)
7400-13	100173617				
7400-14	100173618		1x AO (4 to 20 mA)	24 V AC/DC	One control circuit (fixed set point control for temperature)
7400-15	100173619		2x AO (4 to 20 mA)		2 control loops (fixed set point control for temperature)
7400-16	100173770				
7400-99	100173771	Customized controller configuration			
Data sheet		▶ **T 3990**			



Type 7400 Measuring and Control Station

Electric Steam Generators and On-site Steam Generation

Mobile electric steam generator (90 kW) · Type 7121

Industrial electric steam generator (300 kW) · Type 7120

Industrial electric steam generator (1 MW) · Type 7129

Application

Types 7120 and 7129 Electric Steam Generators are suitable for industrial applications. They are designed for steam generation directly on site and can be used to set up on-site steam networks for steam pressures up to 10 bar.

The Type 7121 Electric Steam Generator with its rating up to 90 kW and 5 bar(a) is ideal for small-scale steam generation (e.g. for disinfection, laboratories, cleaning applications etc.).

The electric steam generator offers the following benefits:

- Very little installation work required (no fuel supply or exhaust system required, less pipework)
- On-site network structure: less heat loss generated since electric cables are used in place of a pipeline
- Lower cost to generate steam especially in cases where a photovoltaic installation is used to generate electricity
- No emissions produced on site



Type 7121 Electric Steam Generator with Type 7126 Feedwater System and Type 7123 Movable Base

Versions

- **Type 7121:** Electric steam generator (90 kW) as a mobile unit for flexible steam generation at any location

The Type 7121 Electric Steam Generator fitted with the Type 7125 Blowdown Vessel and Type 7126 Feedwater System is designed for industrial use and is ideally suited for flexible small-scale steam generation. The Type 7123 Movable Base is used to facilitate transportation of the compact unit.

Rating	kW	15	30	45	60	75	90
Steam output	kg/h	20.4	40.8	61.2	81.6	102	122.4
Max. operating gauge pressure		5 bar					
Max. operating temperature		158 °C					
Voltage		400 V · 50 Hz					
Current	A	23.4	43.2	64.8	86.4	108	130
Dimensions (LxWxH)	mm	1050x450x650					
Approx. weight	kg	80					
Accessories		Type 7126 Feedwater System · Type 7125 Blowdown Vessel · Type 7123 Movable Base					
Data sheets		▶ **T 3977**, ▶ **T 3978**, ▶ **T 3979**, ▶ **T 3980**					

– **Type 7120, Type 7129:** Electric steam generators (300 kW and 1 MW) for the generation of small to medium steam output as stationary units

In comparison with conventional steam generators, fully electric steam generators are better suited to meet a varying steam demand in processes due to the fast start-up and flexible control of steam temperature and output. Furthermore, electric steam generators have a much higher efficiency.

The Type 7128 Boiler Room allows the use of up to three electric steam generators in combination with the following cost-effective, ready-to-use accessories:

- Type 7127 Boiler Feedwater System
- Type 7124 Blowdown Vessel
- A water treatment unit

Electric steam generators	**Type 7120**	**Type 7129**
Rating	300 kW Other ratings on request	1 MW
Operating pressure (steam generator)	11 bar(a)	
Design pressure (boiler)	12 bar(a) Operating pressure 1 bar below the design pressure Special boilers for higher pressures on request	
Permissible operating temperature	-10 to 184 °C	
Rated volume	90.2 l	Approx. 100 l
Voltage	400 V, three phase, 50 Hz	690 V, three phase, 50 Hz
Amperage	435 A	836 A
Steam output	400 kg/h	1300 kg/h
Material Boiler	Stainless steel	
Design basis	DIN EN 12953, DIN EN 14222, DIN EN 12952, PED 2014/68/EU	–
Weight of boiler unit	300 kg	Approx. 350 kg
Accessories	Type 7127 Feedwater System · Type 7124 Blowdown Vessel · Type 7128 Boiler Room	
Data sheets	▶ **T 3976**	▶ **T 3998**

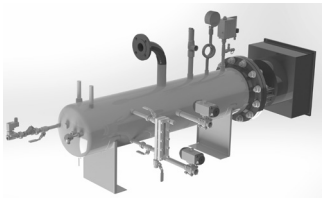

Type 7120 Electric Steam Generator

Steam Conditioning

Water bath desuperheater · Type 7110

Steam conditioning valve · Type 3281

Spray nozzle · Type 7115

Application

Temperature reduction with or without pressure control · Spray nozzles and steam conditioning valve for desuperheating steam to protect downstream systems and processes · Water bath cooler for the generation of saturated steam for highly precise temperature control of product-related processes

Versions

– **Type 7110:** Water bath desuperheaters/saturated steam generators

Saturated steam generated from superheated steam · Compact unit with or without open-loop control · Temperature control für extremely sensitive production processes · Plant protection to safeguard against excess temperature also with SIL capability

Technical data

Water bath desuperheaters	**Type 7110**
Material	1.4541/P235GH (standard version) 1.4571/16Mo3 (special version)
Control range	0 to 100 %
Control accuracy	Max. ±0.1 K
Inlet pressure rating	Up to PN 40 (standard version) Up to PN 160 (standard version)
Saturated steam pressure	Up to 10 bar (standard version) Up to 40 bar (special version)
Saturated steam temperature	Up to 185 °C (standard version)
Steam flow rate	Up to 40 t/h with a saturated steam pressure of 10 bar
Associated documentation	▶ **T 3972**

– **Type 3281:** Pneumatic steam conditioning valve (globe valve)

Technical data

Type 3281 Steam Conditioning Valve	**DIN**		**ANSI**	
Body material Cast steel	**1.6019**	**1.7357**	**A216 WCC**	**A217 WC6**
Nominal size	DN 50 to 300		NPS 2 to 12	
Pressure rating	PN 16 to 160		Class 150 to 900	
End connections	Flanges · Welding ends			
Seat/plug seal and leakage class	Metal seal: IV High-performance metal seal: V			
Characteristic	Equal percentage or linear			
Rangeability	50:1			
Temperature range	-10 to +220 °C		14 to 428 °F (-10 to +220 °C)	
With high-temperature packing	Up to 350 °C		Up to 660 °F (up to 350 °C)	
With insulating section	-10 to +400 °C	-10 to +500 °C	-20 to +800°F (-29 to +425 °C)	-20 to +932 °F (-29 to +500 °C)
Data sheets	▶ **T 8251**		▶ **T 8252**	



Type 7110 Water Bath Desuperheater



Type 3281 Steam Conditioning Valve with Type 3271 Pneumatic Actuator

– **Type 7115:** Cooling nozzle

Technical data

		Venturi-type nozzle	Fixed orifice nozzle	Spring-loaded nozzle	Variable nozzle with pneumatic actuator
Application		For low steam velocities	For a small control range	For a medium-sized control range	For a large control range
Max. temperature		570 °C (steam side)			
Nozzle version		Variable · Cryogenic applications	Fixed	Spring-loaded control	Multiple nozzle controlled by an actuator
Fail-safe action		Fail-open, fail-close or fail-in-place			
Stroking speed		1 to 17 s [1]			<30 s
Pressure rating	DIN	≤PN 100 (PN 400)	≤PN 400		
Nominal size of steam line	Min.	DN 50	DN 100		DN 150
	Max.	DN 500	DN 1000		DN 600
Temperature sensor distance		5 to 10 m	10 to 15 m	10 to 20 m	10 to 20 m
Control valves		SAMSON water control valve with Type 3730 Positioner			Type 3271 Pneumatic Actuator with Type 3730 Positioner including Type 4708 Air Set
Accessories		SAMSON lock-up valve/volume booster/solenoid valve			
Data sheet		▶ **T 3975**			

[1] Depending on the actuator size

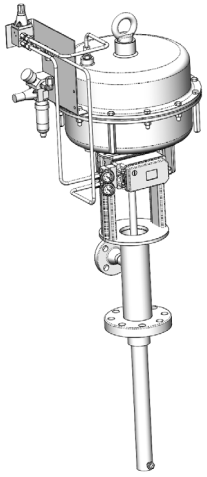

Type 7115 Spray Nozzle

Condensate Systems

Condensate recovery system · Type 7140

Condensate vessel · Type 7141

Flash vessel · Type 7142

Application

Temperature reduction with or without pressure control · Spray nozzles and steam conditioning valve for desuperheating steam to protect downstream systems and processes · Water bath cooler for the generation of saturated steam for highly precise temperature control of product-related processes

Versions

– **Type 7140-1:** Condensate recovery system for collection and feedback of condensate

Associated documentation: ▶ **T 3982**

- Flanges PN 16
- Tank sizes in 350, 700, 1000 or 1500 l
- Stainless steel
- Excessive head up to 200 m · Delivery pressure up to 20 bar
- With on-site level control without level indication
  Optionally on-site level control with level indication
- Standard without insulation
  Optionally with 19 mm Armaflex insulation or 50-mm-thick mineral wool with aluminum jacket
- One feed pump as standard
  Optionally with two feed pumps (redundant 2 x 100 %) and integrated pump switchover control

– **Type 7141:** Condensate vessel for condensate collection and storage

Associated documentation: ▶ **T 3986**

Integrated connections:

- Flanges PN 16 to 40
- Material: stainless steel or non-alloy steel
- Vessel designed as an open or pressurized tank
- With pressure maintaining system to discharge flash steam through the roof
- With liquid level measurement
- Optionally with manhole
- Combined with a Type 7111 Pump Assembly to create a functional unit (including control unit)

– **Type 7142:** Flash vessel

Associated documentation: ▶ **T 3987**

Integrated connections:

- Flanges PN 16 to 63
- Material: stainless steel or non-alloy steel
- Vessel designed as an open or pressurized tank
- Optionally with monitoring of the filling level
- Optionally with manhole
- Optionally with constant pressure control of the flash steam and condensate (see Type 7150 Process Control System)

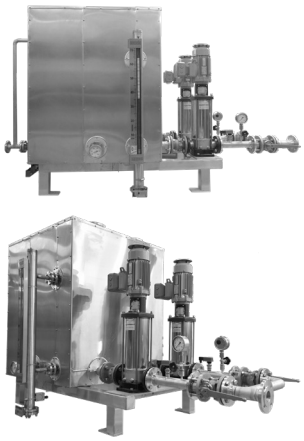

Type 7140-1 Condensate Recovery System in stainless steel without insulation



Type 7141 Condensate Vessel

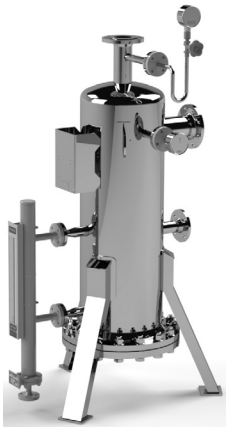

Type 7142 Flash Vessel

Control Valves for Cryogenic Service

Pressure build-up regulator/pressure reducing valve · Type 2357-1

Excess pressure valve · Type 2357-2

Application

Pressure regulators for cryogenic gases and liquids as well as other liquids, gases and vapors

Special features

The regulators consist of a valve, operating diaphragm and set point adjuster.

- Low-maintenance proportional regulators requiring no auxiliary energy
- Wide set point range and convenient set point adjustment
- Rugged design and low overall height
- Cleaned and packed for oxygen service

Versions

– **Type 2357-1:** Pressure build-up regulator or pressure reducing valve

Principle of operation as pressure build-up regulator: the valve opens when the upstream pressure drops (direction of flow from port B to port A).
Principle of operation as pressure reducing valve: the valve closes when the downstream pressure rises (direction of flow from port A to port B).

	Type 2357-1	
K_{VS} coefficient	0.25	0.8
Set point range	1 to 25 bar 10 to 36 bar	0.2 to 2.5 bar 1 to 8 bar 5 to 25 bar 8 to 40 bar
Permissible operating pressure	40 bar	50 bar [1]
Max. perm. differential pressure Δp	Gases: 30 bar · Liquids: 6 bar	
Connections	G ¾ A conical joint	
Temperature range	-196 to +200 °C	
Conformity	CE	
Data sheet	▶ **T 2557**	

[1] For oxygen p_{max} = 40 bar



Type 2357-1

– **Type 2357-2:** Excess pressure valve

The valve opens when the upstream pressure rises.

	Type 2357-2	
K_{VS} coefficient	1.25	0.4
Set point range	0.2 to 2.5 bar 1 to 8 bar 5 to 25 bar 8 to 40 bar	1 to 25 bar 10 to 36 bar
Permissible operating pressure	50 bar [1]	40 bar
Max. perm. differential pressure Δp	3 bar [2]	
Connections	Inlet: G ¾ A conical joint Outlet: G ¾ female thread	
Temperature range	-196 to +200 °C	
Conformity	CE	
Data sheet	▶ **T 2557**	

[1] For oxygen p_{max} = 40 bar
[2] > 3 bar only with special accessories



Type 2357-2

Control Valves for Cryogenic Service

Pressure build-up regulator · Type 2357-11
Excess pressure valve · Type 2357-21

Application
Pressure regulators for cryogenic gases and liquids as well as other liquids, gases and vapors

Special features
- Low-maintenance proportional regulators requiring no auxiliary energy
- Wide set point range and convenient set point adjustment
- Rugged design and low overall height
- Suitable for oxygen service
- Wetted parts free of non-ferrous metal

Versions
The regulators consist of a valve, operating diaphragm and set point adjuster.

– **Type 2357-11: Pressure build-up regulator with safety function**
Pressure regulator with globe valve · Direction of flow from port B to port A · The upstream pressure is transmitted to the operating diaphragm. The valve opens when the upstream pressure falls below the adjusted set point.
Safety function: the plug in the pressure build-up regulator operates like a safety valve and relieves the pressure chamber. The pressure acts from below against the plug surface. The valve opens to equalize the pressures.

Pressure reducing valve
Pressure regulator with globe valve · Direction of flow from port A to port B · The valve regulates the downstream pressure to the adjusted set point. The valve closes when the downstream pressure rises above the adjusted set point.

– **Type 2357-21: Excess pressure valve**
Pressure regulator with globe valve: direction of flow from port B to port A · The valve regulates the upstream pressure to the pressure adjusted at the set point adjuster. The valve opens when the pressure increases until the set point is reached. The valve opens when the pressure increases until the set point is reached. The regulator is additionally equipped with an integrated non-return unit that prevents the medium from flowing back.



Type 2357-11 and Type 2357-21

Technical data

	Type 2357-11	Type 2357-21
K_{VS} coefficient	0.8	1.25
Set point ranges in bar	0.2 to 2.5 · 1 to 8 · 5 to 25 · 8 to 40	
Permissible operating pressure	63 bar [1]	
Temperature range	-200 to +200 °C [2]	
Conformity	CE	
Data sheet	▶ **T 2560**	

[1] For oxygen max. 40 bar
[2] For oxygen max. 60 °C

Accessories

- Coupling nut with ball-type bushing and welding nipple for 21.3x1.6 mm pipe diameter
- Coupling nut with ball-type bushing and flanges

Special versions

- Version for liquid hydrogen
- With welding ends
- Version for flammable gases



Type 2357-11 and Type 2357-21

Control Valves for Cryogenic Service

Pressure build-up regulator · Type 2357-3
with safety function and integrated excess pressure valve

Application

– **Type 2357-3:** pressure regulator for cryogenic gases as well as liquids, gases and vapors

Special features

- Low-maintenance proportional regulators requiring no auxiliary energy
- Wide set point range and convenient set point adjustment
- Rugged design and low overall height
- Cleaned and packed for oxygen service

Versions

The pressure regulator consists of a valve with three ports (A, B and C), a spring-loaded operating bellows and a set point adjuster.

Pressure build-up regulator with safety function

Operating direction from port A to port B (closing)

The tubular plug in the pressure build-up regulator operates like a safety valve and relieves the pressure chamber at port A of pressure when the pressure exceeds the set point by 5 bar. The difference in pressure at the bellows between the inside pressure at port C and outside pressure at port A creates a positioning force. This force opens the plug, opposing the force of the closing spring. As a result, the pressures are equalized and the pressure chamber upstream of port A is relieved of pressure.

Direction of flow from port B to port C (opening)

When no pressure is applied, the passage from port B to C is closed. The tubular plug does not open the valve until the pressure becomes 0.5 bar higher than the set point (pressure build-up). Port C can be additionally equipped with a non-return unit.

Technical data

	Type 2357-3 Process medium in the gas phase
K_{VS} coefficient	Pressure build-up: 3.2 · Pressure reduction: 0.8
Set point range bar	2 to 10, 8 to 26, 25 to 40
Permissible operating pressure	40 bar
Temperature range	-196 to +200 °C [1]
Conformity	CE
Data sheet	▶ **T 2559**

[1] For oxygen max. 60 °C

Accessories

– Solder nipple with ball-type bushing: port A and B for connection to Ø 28 mm pipes
– Port C for Ø 18 mm pipes: optionally non-return unit

Special versions

– All wetted parts made of CrNiMo steel
– Type 2357-3: for use with process medium in the liquid phase



Type 2357-3

Self-operated Temperature Regulators

for cryogenic applications
Safety temperature monitor (STM) · Type 2040

Application

Pressure regulator for cryogenic gases and liquids as well as other liquids, gases and vapors

Special features

- Self-operated regulator with integrated temperature sensor
- Convenient set point adjustment
- Free of oil and grease for oxygen
- Rugged, compact design featuring small dimensions

Versions

The Type 2040 Safety Temperature Monitor consists of a body, an integrated temperature sensor, a limit adjuster and the connecting body with G -1¼ A conical joints at both the inlet and outlet.

Connection parts: soldering nipples and welding ends including connection nuts

Technical data

	Type 2040
Body connection	G 1¼
K_{VS} coefficient	5
Limit ranges [1)]	-30 to +10 °C -45 to -10 °C
Permissible operating pressure	40 bar
Perm. differential pressure	25 bar
Leakage class according to IEC 60534-4	≤0.05 % of K_{VS} with limit range -30 to +10 °C ≤0.1 % of K_{VS} with limit range -45 to +10 °C
Hysteresis	2 K
Accuracy	±1 °C
Storage temperature range	-60 to +60 °C
Temperature open/closed differential	17 K
Conformity	CE·EAC
Data sheet	▶ **T 2090**

1) Temperature limit adjustable within the specified limit range;
To adjust the limit properly, the ambient temperature must be at least 25 K above the temperature limit.

Accessories

– Connecting parts: connection nut with solder nipple/welding ends with either a spherical liner or gasket (▶ **T 2090** for details)

Special version

– Limit adjuster with limit marking · Ring markings on the limit adjuster in steps of 10 °C



Type 2040

Electronic Digital Controllers for Heating and District Heating

Heating and district heating controllers
TROVIS 5573, TROVIS 5573-1, TROVIS 5578-E, TROVIS I/O
SAM MOBILE+ Gateway, SAM HOME Gateway
Modbus to meter bus gateway
Converter or repeater CoRe02

TROVIS SAM® DIGITAL

Application
Outdoor-temperature-compensated flow temperature control in hot water heating systems and domestic hot water heating systems

Special features

- Easy start-up using default settings
- Connection to room panels for individual heating circuits
- Heating characteristics optionally based on the gradient or based on four points
- Calculation of the best possible activation and deactivation times for the heating (optimization)
- Automatic adaptation of the heating characteristic (adaptation)
- Delayed outdoor temperature adaptation
- Demand-driven control using the set points of downstream control circuits demanded by device bus or a 0 to 10 V signal
- Annual clock for maximum four time schedules and three time-of-use periods
- TROVIS-VIEW software for configuration and parameterization of controllers

TROVIS 557x:

– Heating and district heating controllers for wall, panel or rail mounting
– Two control circuits (three control circuits with TROVIS 5578-E) for controlling one primary heat exchanger and supplementary heating circuits plus DHW heating or two heating circuits and one DHW circuit or two heating circuits (three heating circuits with TROVIS 5578-E)
– Alternatively, applications including outdoor-temperature-controlled buffer storage tank control (also with solar support) and heating circuits can be implemented.
– **TROVIS 5573-000x:** display with icon readings
  - RS-232 or RS-485 interface for Modbus-RTU communication using optional external modules
  - Modbus-TCP/IP communication and connection to SAM DISTRICT ENERGY using optional external gateways
  - Saving of the operating values of the past 7 days at 2-minute intervals in an optional external data logging module.
  - Transfer of controller settings using a memory module or the TROVIS-VIEW software
– **TROVIS 5573-100x:** graphics display with plain-text readings
  - RS-232 or RS-485 interface for Modbus-RTU communication using optional external modules
  - Modbus-TCP/IP communication and connection to SAM DISTRICT ENERGY using optional external gateways
  - Alarms and setting changes including time stamp shown in tables on the backlit graphics display
  - Graphical display of operating values of the past 14 days at 1-minute intervals
  - Transfer of controller settings using a memory module or the TROVIS-VIEW software



TROVIS 5573



TROVIS 5573-1

– **TROVIS 5573-110x:** graphics display with plain-text readings
  - M-Bus interface for max. three M-Bus units, RS-232 or RS-485 interface for Modbus-RTU communication using optional external modules
  - Modbus-TCP/IP communication and connection to SAM DISTRICT ENERGY using optional external gateways
  - Alarms and setting changes including time stamp shown in tables on the backlit graphics display
  - Graphical display of operating values of the past 14 days at 1-minute intervals
  - Transfer of controller settings using a memory module or the TROVIS-VIEW software
– **TROVIS 5578-E:** graphics display with plain-text readings
  - Buffer tank systems with continuous-flow hot water module possible.
  - Maximum three control loop circuits possible using optional external TROVIS I/O expansion module
  - Multi-circuit systems possible by interconnecting controllers by device bus
  - M-Bus interface for maximum three M-Bus devices, two galvanically isolated RS-485 interfaces for separate Modbus RTU or device bus communication
  - Ethernet interface for Modbus-TCP/IP communication and connection to SAM DISTRICT ENERGY using an Internet router, alternative access using optional external gateways
  - Alarms and setting changes including time stamp shown in tables on the backlit graphics display
  - Graphical display of operating values of the past 14 days at 1-minute intervals
  - Bluetooth interface to transfer controller settings using the TROVIS 55Pro smartphone app (iOS/Android)
  - DHW heating with noiseless triacs (230 V AC)



TROVIS 5573-1



TROVIS 5578-E



TROVIS I/O

Technical data (• = installed/yes; o = optional)

	TROVIS 5573	TROVIS 5578-E	TROVIS I/O
Number of control circuits	2	3	1
Number of heating circuits	2	3 [1]	1
Number of DHW circuits	1	1 [2]	1
Inputs			
Sensors	8	14	4
Binary as an alternative	–	14	4
alternatively 0 to 10 V	–	–	–
alternatively 0/4 to 20 mA	–	–	–
Binary as an addition	2	–	–
additionally 0 to 10 V	1 [4]	3	–
Usable sensor types	Pt1000, PTC, Ni1000	Pt1000, PTC, Ni1000	Pt1000, PTC, Ni1000
Outputs			
Control signal			
On/off or three-step	2	3	1
Binary	3	5	2
0 to 10 V/PWM	1[4]/0	4	2
Interfaces · Partly optional			
Device bus	–	•	•
Meter bus	o	•	–
Modbus slave			
RS-232	o	–	–
RS-485	o	•	–
Ethernet	o	•	–
Data transmission and data logging			
TROVIS-VIEW (software module)	•	•	–
Data transmission			
With memory module	•	–	–
Direct	• [5]	• [6]	–
Data Logging Viewer/ Trend-Viewer	•/• [7]	•/•	–/–
Supply voltage	85 to 250 V AC	85 to 250 V AC	85 to 250 V AC
Conformity	CE		
Data sheets	▶ **T 5573**	▶ **T 5578-E**	**On request**

[1] With 3 TROVIS I/O: 6
[2] With 3 TROVIS I/O: 2
[3] Voltage and current input cannot be used at the same time
[4] 0 to 10 V input and output in TROVIS 5573 cannot be used at the same time
[5] Using USB-Converter 3
[6] Over Ethernet
[7] TROVIS 5573-1xxx only



TROVIS 5573



TROVIS 5578-E



TROVIS I/O

SAM MOBILE+ Gateway

Communication gateway to access the SAM DISTRICT ENERGY portal. Polling (including remote maintenance and visualization) of TROVIS heating and district heating controllers and/or utility meters over mobile network standards (LTE-M, NB-IoT or GPRS)

- Integration of controllers (TROVIS 5573, 5576, 5578, 5579), electric actuators (Type 3374), electric actuators with process controller (TROVIS 5724-8 and 5725-8) or other generic Modbus devices
- Connection of utility meters (max. three M-Bus loads)
- Simultaneous reading of controller and meter data
- Further physical interfaces (optional):
  Inputs:

  4x 0 to 10 V, Pt1000 or DI binary input

  1x Pt1000 or DI binary input (floating)

  Outputs:

  1x 0 to 10 V output or PWM output

  1x digital outputs
- Manufacturer-specific meter bus files (ZDB) for billing date values or monthly values
- Wall, panel or rail mounting
- Also available as rental version including data connection and further accessories



SAM MOBILE+ Gateway

SAM HOME Gateway

Communication gateway to access the SAM DISTRICT ENERGY portal. Polling (including remote maintenance and visualization) of TROVIS heating and district heating controllers and/or utility meters over LAN (Ethernet).

- Integration of controller (TROVIS 5573), electric actuator (Type 3374), electric actuators with process controller (TROVIS 5724-8 and 5725-8) or other generic Modbus devices
- Simultaneous access to several Modbus TCP masters in LAN
- Connection of utility meters (max. three M-Bus loads)
- Further physical interfaces (2x DI, 1x DO, 1x AI, 1x AO)
- Local buffer to temporarily store selected values (capacity for 14 days)
- Manufacturer-specific meter bus files (ZDB) for billing date values or monthly values
- Wall, panel or rail mounting
- Also available as rental version including data connection and further accessories



SAM HOME Gateway

Modbus to meter bus gateway

Used in HVAC networks to integrate M-bus meters into a control system.

- Maximum six heat, electricity or water meters according to EN 13757
- Conversion of input data into Modbus data



Modbus to meter bus gateway

Universal bus unit CoRe02 (converter or repeater)

Converter (RS-232/RS-485) or repeater for RS-485 bus networks (two-wire/four-wire)

- RS-485 interfaces optionally connected over RJ-45 jack or screw terminals
- Slide switches to select the operating mode, transmission rate, termination and bus bias voltage
- LED to monitor communication
- Wall, panel or rail mounting



Universal bus unit CoRe02

Temperature Sensors

Pt1000 resistors

Application

Sensors for measuring temperatures in heating, ventilation and air-conditioning systems as well as thermal plants

Types 5207 to 5277 · Temperature sensors with Pt1000 resistor

Technical data

	Type 5207-xx	Type 5227-4	Type 5257-x
Screw-in sensor	•	–	–
Duct sensor	–	–	–
Outdoor sensor	–	•	–
Room sensor	–	–	•
Operating temperature range	-60 to +400 °C -50 to +180 °C -15 to +180 °C -20 to +150 °C -5 to +90 °C	-50 to +90 °C	-35 to +70 °C
Conformity	CE		
Data sheets	▶ **T 5220,** ▶ **T 5221,** ▶ **T 5222**		

	Type 5267-3	Type 5277-21	Type 5277-31 Type 5277-51
Immersion sensor	–	•	•
Contact sensor	•	–	–
Operating temperature range	-50 to +120 °C	-50 to +180 °C	-50 to +180 °C
Conformity	CE		
Data sheet	▶ **T 5220**		

Types 5207-60/-61/-64/ and -65 as fast-response versions with Pt1000 resistor (▶ **T 5221** and ▶ **T 5222**)



Type 5207-64 (top),
Type 5207-61 (bottom)



Type 5207



Type 5267-3

Thermostats

Type 5343 Safety Temperature Monitor
Type 5344 Temperature Regulator
Type 5345 Safety Temperature Limiter
Types 5347, 5348 and 5349 Double Thermostats

Types 5343, 5344, 5345, 5347, 5348 and 5349

- Can be mounted either as a contact thermostat or as a thermostat with thermowell
- Easy to wire using spring-clamp terminals
- Switching capacity 16 A, 230 V
- Stable switching point thanks to ambient temperature compensation
- Degree of protection IP54

Application

The thermostats are tested by the German technical surveillance association (TÜV) according to DIN EN 14597 for temperature control in heat-generating plants and for use in HVAC applications as:

– Safety temperature monitor (STM)
– Temperature regulator (TR)
– Safety temperature limiter (STL)
– Temperature regulator and safety temperature limiter (TR/STL)
– Temperature regulator and safety temperature monitor (TR/STM)

Technical data

Single thermostats	**Type 5343**	**Type 5344**	**Type 5345**
Function	STM	TR	STL
Set point range	0 to 60 °C 40 to 100 °C 70 to 130 °C 35 to 95 °C	0 to 120 °C 20 to 150 °C	70 to 130 °C 30 to 90 °C
Sensor length	2000 mm		
Max. medium temperature	85 °C 125 °C 155 °C 120 °C	145 °C 175 °C	155 °C 115 °C
Conformity	CE		
Data sheet	▶ **T 5206**		

Double thermostats		**Type 5347**	**Type 5348**	**Type 5349**
Function		TR/STL	TR/STM	STM/STL
Set point range	TR	0 to 120 °C	0 to 120 °C	–
	STL	70 to 130 °C 30 to 90 °C	–	70 to 130 °C
	STM	–	70 to 130/40 to 100 °C	70 to 130 °C
Sensor length		2000 mm		
Max. medium temperature		145 or 115 °C	145 or 125 °C	145 °C
Conformity		CE		
Data sheet		▶ **T 5206**		



Type 5343, Type 5344 and Type 5345 (from left to right)



Type 5347



Type 5348



Type 5349

Software

TROVIS-VIEW 6661 Software
Valve sizing · Calculation and sizing of valves
VDI 3805 records of products

TROVIS

TROVIS-VIEW

Universal configuration and user interface for various smart SAMSON instruments, such as positioners, industrial and heating controllers, electric actuators, electric actuators with process controller and differential pressure meters.

- Easy operation
- Selectable language
- Modular structure with user interface, communications server and device-specific database modules containing characteristic properties, e.g. parameters, data points, user levels etc.
- This means that data can be changed in the device immediately or they can be saved on the computer first and downloaded to the device on site.
- Direct operation and monitoring in online operation · In addition to cyclical refreshment of data points, freely definable data points can also be logged. Data can be viewed both as a graph and in tables. Data can be imported and exported.
- Communication can be operated over a network
- Free download from our website at ▶ **www.samsongroup.com > Downloads > Software & Drivers > TROVIS-VIEW** · ▶ **T 6661** for further information

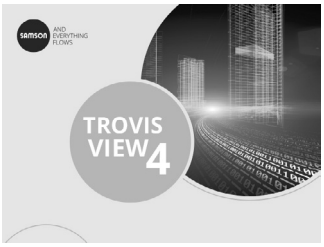

Operating and monitoring using TROVIS-VIEW

Valve sizing

The SAMSON Valve Sizing Program is a software for calculating and sizing control valves. This program calculates the valve-specific data (Kvs coefficients, required valve size etc.) for up to three cases using the process and medium data entered by the user. Afterwards, these data are used to determine a valve which is then suggested by the program. Finally, the sound emission and other operating data are calculated for the selected valve. The software includes many additional user-friendly functions for valve sizing.

New features included in version 4.7 of the SAMSON Valve Sizing

- Medium database with over 1000 process media including functions to calculate the process media in relation to pressure and temperature.
- Automatic assignment of media properties, such as density, viscosity, vapor pressure.
- Automatic assignment of enthalpy, flashing data, isentropic exponents and phases
- Missing data are estimated using approximation equations
- Graphs for valve sizing analysis:
  - Valve characteristics measured on the SAMSON test bench can be used
  - Pressure-temperature graphs for the selected valve body material and pressure rating
  - Medium data with isobars for the maximum temperature range are displayed for all media in the media explorer.
- New units for conversion as well as new noise prediction standards (IEC 60534 8-3 and 8-4) have been added.



Calculation and sizing using valve sizing program

VDI 3805 records of products

Electronic product catalog to exchange data in building services (mechanical, electrical, plumbing) providing technical and geometrical data for CAD-supported planning, drawing, sizing and bidding. The data can be used in both planning and maintenance.

– Free download from our website at ▶ www.samsongroup.com > Downloads > Software & Drivers > VDI 3805



VDI 3805 records of products

SAM VALVE MANAGEMENT

Industry-specific application · Web-based solution for smart valve diagnostics

SAM DIGITAL

SAM VALVE MANAGEMENT

SAM VALVE MANAGEMENT is a web-based, industry-specific solution for the smart monitoring and management of control valves installed in process plants. The cloud service application provides a complete overview of all valves fitted with smart SAMSON positioners connected to the system, along with clearly structured valve and plant reports including all relevant messages and recommended action. Extended diagnostic functions, such as identification of the valve's working range and clear diagnostic messages, are also part of the SAM VALVE MANAGEMENT concept.

SAM VALVE MANAGEMENT follows a preventive approach, which enables users to plan maintenance work before an actual malfunction occurs to prevent costly unscheduled plant downtime.



Typical applications

- Monitoring of valves for maintenance and safety purposes
- Detection of wear in valves
- Support in planning necessary maintenance work

Easy-to-use user management

- Complete overview of all SAMSON valves with mapping of existing asset structures
- Dashboards providing an overview of the entire plant and single tags
- Clear recommended action after a maintenance alarm is generated

Creating added value

- Optimized costing
  - Optimized profitability and plant availability
  - Prevention of unplanned plant downtime
  - Proactive maintenance planning
- Data management
  - Access to view operating states
  - Built-in file management to save valve-related information
  - Access from anywhere at any time
- Data analysis
  - Automatic and manual analysis of data
  - Efficient monitoring of all relevant diagnostic data
  - Asset- and plant-related reporting
  - Visualization of valve operating modes including histograms and trend graphs
- Predictive maintenance
  - Efficient, proactive maintenance planning
  - Prevention of costly unplanned plant downtime
  - Extended diagnostic functions, such as identification of the valve's working range, clear diagnostic messages with recommended action
  - SAMSON's asset management service provides direct point of contact

SAM DISTRICT ENERGY

Industry-specific application · Specifically developed for district heating and cooling

SAM DISTRICT ENERGY

Web-based solution for managing, controlling and optimizing heating and cooling networks with all key data on connected controllers, utility meters and electric actuators

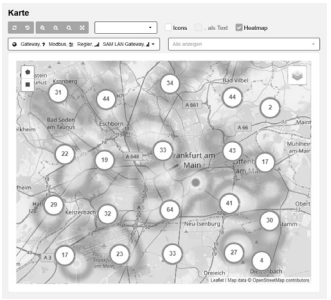

Typical applications

- Wide variety of connection options through the use of various communication protocols in SAM MOBILE Gateways and SAM HOME Gateways
- Boiler house automation with various visualization options
- Clear assignment of meter IDs and consumption data to ensure that the heat consumption and billing information are logged correctly for every customer.
- Dynamic detection of a network's point of worst efficiency to achieve the optimal pressure
- Reduction of the network temperature to the absolute minimum required
- Identification of reserves in hydronic networks to extend heat networks
- Interfaces to customers' servers and ERP systems over API REST
- Maximum scalability due to an unlimited number of devices that can be connected
- Secondary use of the portal through rental to major customers

Easy-to-use user management

- Central administration with integrated dynamic authorization concept
- Responsive web design for devices with Internet connection
- Customized user interface including setting up company accounts with company branding
- Map of network route plans with several layers

Creating added value through the following functions

- Algorithm-based fault analysis and alarm management
- Automatic system configuration based on a system code number
- Creation of virtual meters or devices as well as user-specific designations of heating circuits
- Smart Detection with a priority rating of plant problems including recommended action and additional information
- Visual network analysis with relative color coding and time-lapse mode for a dynamic detection of a network's point of worst efficiency
- Holistic approach to enhance the protection, redundancy and security of data
- Sensor sharing and cross-traffic to achieve optimized control
- Comprehensive data analysis options including operators as well as bar graphs and charts
- Network pump control based on valve positions or differential pressures

SAM GUARD®

Predictive analytics for the process industry

SAM GUARD®

SAM GUARD® turns industrial data into actionable intelligence detecting production line issues before they become failures.

It connects to your existing systems with no new sensors or costly integration, helping teams reduce downtime, improve productivity, save energy and stay compliant. Early alerts, mobile notifications and shared dashboards keep your team connected and ready to act anytime anywhere.
Our expert process engineers help analyze each alert and close the loop – turning data into real action.

Key features

- 24/7 real-time monitoring across the entire plant
- Support for all key sensor types: pressure, flow, torque, level etc.
- Early alerts for rotating and static equipment: exchangers, valves, reactors, boilers etc.
- Detection of leaks, blockages, faulty sensors, emissions and hidden issues missed by DCS
- Custom alert rules tailored to plant-specific behavior
- Integration with P&ID for contextual analysis
- Studio for digital process mapping and asset modeling
- Centralized alert screen with mobile notifications
- Advanced analytics: trend analysis, virtual sensors, custom logic
- Comprehensive dashboard for KPIs, event history, saved hours and maintenance insights
- Event tracking with logging, categorization and structured closure
- Shared insights across teams with user-specific filters and settings
- Central admin with role-based access and multi-language support
- Customizable interface with company-level branding
- Expert reports with root cause analysis and actionable recommendations
- ISO 27001 compliant

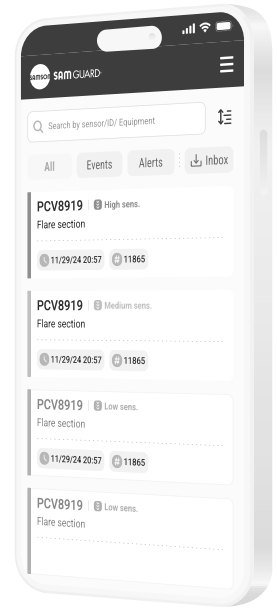



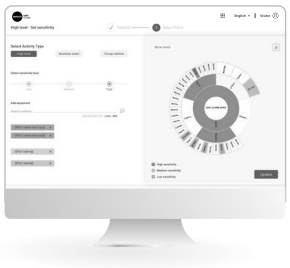

Self-operated Temperature Regulators

Temperature Regulators
With Type 1, Type 4 and Type 4u Globe Valve
With Type 9 Three-way Valve

Application

Temperature regulators with globe or three-way valves and Types 2231, Type 2232 or Type 2234 Control Thermostat, tested according to DIN EN 14597. Suitable for liquids, gases and vapors, especially for heat transfer media, such as water, oil and steam or for coolants, such as cooling water.

Special features

Regulator components

- Type 2111, Type 2422 or Type 2119 Valve
- Either a Type 2231, Type 2232 or Type 2234 Control Thermostat

Versions

– **Type 1:** Flanges
Balanced globe valve
The valve **closes** when the temperature rises
Body materials according to DIN and ANSI: cast iron (EN-GJL-250), spheroidal graphite iron (EN-GJS-400-18-LT), cast steel (1.0619), cast stainless steel (1.4408) or A126 Class B, A216 WCC, A351 CF8M

– **Type 4:** Flanges
Balanced globe valve
The valve **closes** when the temperature rises
Body materials according to DIN and ANSI: cast iron (EN-GJL-250), spheroidal graphite iron (EN-GJS-400-18-LT), cast steel (1.0619), cast stainless steel (1.4408) or A126 Class B, A216 WCC, A351 CF8M

– **Type 4u:** Same as Type 4 with additional reversing device
The valve **opens** when the temperature rises.

– **Type 9:** Flanges
Balanced three-way valve
Mixing or diverting service for liquids
Body materials according to DIN and ANSI: cast iron (EN-GJL-250), spheroidal graphite iron (EN-GJS-400-18-LT), cast steel (1.0619), cast stainless steel (1.4408) or A126 Class B, A216 WCC, A351 CF8M



Type 4 with Type 2231 Control Thermostat



Type 1 with Type 2231 Control Thermostat

Technical data

Valve	Type 2111	Type 2422
Pressure balancing	Without	With
Connection	DN 15 to 50	DN 15 to 150
	NPS ½ to 2	NPS ½ to 10
Pressure rating	PN 16 to 40	PN 16 to 40
	Cl. 150/300	Class 125 to 300
Max. permissible temperature	350 °C	350 °C [1]
	660 °F	660 °F [1]
Conformity	CE	
Data sheets	**▶ T 2111, ▶ T 2115**	**▶ T 2121, ▶ T 2025**

[1] Version balanced by a diaphragm 150 °C (300 °F)

Materials · Valve body

	Type 2111	Type 2422
DIN	EN-GJL-250, 1.0619, EN-GJS-400-18-LT Cast stainless steel 1.4408	EN-GJL-250, 1.0619, EN-GJS-400-18-LT Cast stainless steel 1.4408
ANSI	A216 WCC A216 A351 CF8M	A126B A216 WCB/WCC A351 CF8M



Type 4u with Type 2231 Control Thermostat

Technical data

Valve	Type 2119
Pressure balancing	DN 32 and larger
Nominal size	DN 15 to 150 (NPS ½ to 6)
Pressure rating	PN 16 to 40 (Class 150 and 300)
Max. permissible temperature	350 °C (660 °F)
Conformity	CE
Data sheets	**▶ T 2133, ▶ T 2134**

Materials · Valve body

	Type 2119
DIN	EN-GJL-250, 1.0619, 1.4408
ANSI	A216 WCC, A351 CF8M



Type 9 with Type 2231 Control Thermostat

Special versions

- Valve entirely of stainless steel
- Reduced K_{VS} coefficient
- Valve with flow divider ST 1 for noise reduction with steam and non-flammable gases
- Version free of non-ferrous metal

Type 2231, Type 2232, Type 2234 Control Thermostats

Application

Temperature regulation for heating or cooling installations

Special features

- The control thermostats consist of a temperature sensor, a set point adjuster with temperature scale and excess temperature safety device, a capillary tube and an operating element.
- They regulate the medium temperature by causing the connected valve to open or close.
- The control thermostats operate according to the liquid expansion principle.

Versions

– **Type 2231:** Set points from -10 to 150 °C (15 to 300 °F), set point adjustment at the sensor, suitable for liquids and steam · Installation in pipelines, vessels, heating or cooling systems

– **Type 2232:** Set points from -10 to 250 °C (15 to 480 °F), separate set point adjustment, application same as Type 2231

– **Type 2234:** Set points from -10 to 250 °C (15 to 480 °F), separate set point adjustment, suitable for liquids, air and other gases, installation in air ducts, vessels, pipelines, heating or cooling systems

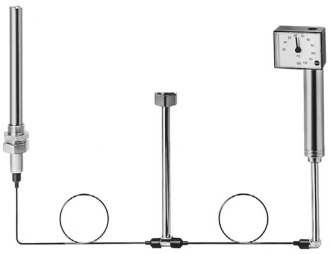

Type 2232



Type 2231

Technical data

	Type 2231	Type 2232	Type 2234
Set point span	-10 to +90, 20 to 120 or 50 to 150 °C For Types 2232, 2234 also 100 to 200, 150 to 250 °C		
	15 to 195, 70 to 250 or 120 to 300 °F For Types 2232 and 2234 also 210 to 390 °F, 300 to 480 °F		
Ambient temperature range	-40 to +80 °C (-40 to +175 °F) at the set point adjuster		
Permissible sensor temperature	100 K above the adjusted set point		
Capillary tube length	5 m (16 ft)		
Data sheets	**▶ T 2111 (DIN), ▶ T 2115 (ANSI), ▶ T 2121 (DIN), ▶ T 2025 (ANSI), ▶ T 2123, ▶ T 2133 (DIN), ▶ T 2134 (ANSI)**		

Materials

	Type 2231	Type 2232	Type 2234
Sensor	Bronze	Bronze	Copper
Capillary tube	Nickel-plated copper		

Special versions

– Sensor of CrNiMo steel
– Capillary tube made of CrNiMo steel or plastic-coated copper
– 10 m (50 ft) capillary tube

Self-operated Temperature Regulators

Typetested safety devices
Types 1/..., 4/... and 9/...
Safety temperature limiter (STL) · Type 2212

Application

Safety temperature limiter according to DIN 4747-1 and DIN EN 12828 · Tested according to DIN EN 14597

Special features

- Interrupts and locks the energy supply when an adjusted limit value is reached, when the capillary tube breaks or when leakage occurs in the sensor system
- Can only be reset or started-up with a tool, provided the defect has been eliminated and the temperature has fallen below the limit value

Versions

Safety temperature limiters (STL)

Components:

– Type 2111/Type 2422 Globe Valve or Type 2119 Three-way Valve and Type 2212 Safety Temperature Limiter with temperature sensor and thermowell, limit adjuster, capillary tube and connecting element with spring mechanism

Safety temperature limiters (STL) with a valve operating without auxiliary energy and designed for extended safety according to DIN EN 14597. Devices tested according to DIN EN 14597 are available for installations according to DIN 4753.

Technical data

	Type 2212 STL (size 50 [1], size 150 [2])
Adjustable limit range	10 to 95, 20 to 120 or 40 to 170 °C
Max. permissible ambient temperature	80 °C (60 °C with electromagnetic release)
Min. permissible sensor temperature [3] at 0 °C ambient temperature	Smallest adjustable temperature limit of the selected limit range
Min. permissible temperature of the STL including sensor when the plant is shut down [3]	10 to 95 °C limit range : -10 °C 20 to 120 °C limit range : 0 °C 40 to 170 °C limit range : +10 °C
Max. perm. temperature at the sensor	50 K above the adjusted set point
Capillary tube length	5 m
Conformity	CE
Data sheet	▶ **T 2046**

1) For valves up to DN 50
2) For valves larger than DN 50
3) The STL is locked when the temperature falls below the specified temperature.

Materials

Connecting element with spring mechanism	GD AlSi12 (230), connecting piece 1.4104
Sensor	Copper
Thermowell	Copper or CrNiMo
Capillary tube	Copper

Special versions

– Electric signal transmitter for remote transmission of the plant status
– With Type 2401 Pressure Element
– 10 m capillary tube length (not tested according to DIN EN)

Application

Temperature monitoring in heating and water heating installations according to DIN 4747-1 and DIN EN 12828 · Tested according to DIN EN 14597



Type 2212

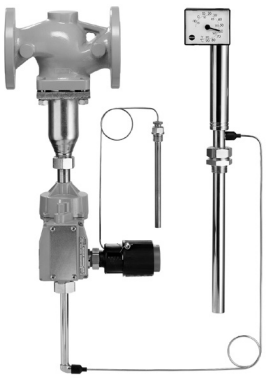

STL with Type 2422 Valve, Type 2231 Control Thermostat and Type 2212 Safety Temperature Limiter

Self-operated Temperature Regulators

Typetested safety devices
Types 1/..., 4/... and 9/...
Safety temperature monitor (STM) · Type 2213

Special features

- Interrupts the energy supply when an adjusted limit value is reached, when the capillary tube breaks or when leakage occurs in the sensor system
- Automatic reset or start-up, provided the defect has been eliminated and the temperature has fallen below the limit value

Versions

Safety temperature monitors (STM)

Components:

– Type 2111/Type 2422 Globe Valve or Type 2119 Three-way Valve and Type 2213 Safety Temperature Monitor with temperature sensor, limit adjuster, capillary tube and connecting element with spring mechanism

Safety temperature monitors (STM) with a valve operating without auxiliary energy and designed for extended safety according to DIN EN 14597. Devices tested according to DIN EN 14597 are available for installations according to DIN 4747 or DIN EN 12828.

Technical data

	Type 2213
Limit range	-10 to 90 °C or 20 to 120 °C
Ambient temperature range at the limit value adjuster	-40 to +80 °C
Max. perm. temperature at the sensor	100 K above the adjusted set point
Capillary tube length	5 m
Conformity	CE
Data sheet	▶ **T 2043**

Materials

Connecting element with spring mechanism	Nickel-plated brass
Sensor	Bronze
Thermowell with conductive plate	Bronze, copper or CrNiMo steel
Capillary tube	Nickel-plated copper

Special versions

– Electric signal transmitter for remote transmission of the plant status
– Capillary tube 10 m, made of copper (not tested according to DIN EN)



Type 2213



STM with Type 2422 Valve, Type 2213 Safety Temperature Monitor and Type 2232 Control Thermostat

Self-operated Temperature Regulators

Temperature regulators · Types 43-1, 43-2, 43-3, 43-5, 43-6 and 43-7

Valve closes when the temperature rises · Types 43-1, 43-2, 43-5 and 43-7
Valve opens when the temperature rises · Type 43-6
Three-way valve for mixing and diverting service · Type 43-3

Application

Regulators for district heating systems, heat generators, heat exchangers and other HVAC and industrial applications. Suitable for liquids, gases and vapors at operating pressures up to 25 bar.

– For heating service: Types 43-1, 43-2, 43-5 and 43-7
– For cooling service: Type 43-6
– For mixing or diverting service, heating or cooling service: Type 43-3

Special features

- Low-maintenance proportional regulators requiring no auxiliary energy
- Temperature sensors suitable for any desired mounting position and high permissible ambient temperatures, especially suitable for district heating networks

Versions

The regulators consist of a valve, a Type 2430 Control Thermostat with set point adjuster, a capillary tube and temperature sensor operating according to the adsorption principle.



Type 43-1



Type 43-2



Type 43-3

Technical data

	Type 43-1	Type 43-2	Type 43-3
Valve	Type 2431	Type 2432	Type 2433
Pressure balancing	Plug balanced by a piston		–
Flanged body	–	DN 15 to 50	–
Set point range	0 to 35, 25 to 70, 40 to 100, 50 to 120, 70 to 150 °C		
	30 to 95, 75 to 160, 105 to 210, 160 to 300 °F		
Max. permissible temperature	Liquids: 150 °C (300 °F), non-flammable gases: 80 °C (175 °F)		Water: 150 °C (300 °F)
Conformity	CE		
Data sheets	**▶ T 2171 (DIN), ▶ T 2175 (ANSI)**		**▶ T 2173**

	Type 43-5	Type 43-7	Type 43-6
Valve	Type 2435	Type 2437	Type 2436
Pressure balancing	Plug balanced by bellows		
Flanged body	–	DN 15 to 50	
Set point range	0 to 35, 25 to 70, 40 to 100, 50 to 120, 70 to 150 °C		
	30 to 95, 75 to 160, 105 to 210, 160 to 300 °F		
Max. permissible temperature	Liquids, steam: 200 °C (390 °F)		Liquids: 150 °C (300 °F) Non-flammable gases: 80 °C (175 °F)
Conformity	CE		
Data sheets	**▶ T 2172, ▶ T 2174**		

Connections

	DIN									ANSI		
	G			DN						NPT [1]		
	½	¾	1	15	20	25	32	40	50	½	¾	1
Type 43-1	•	•	•							•	•	•
Type 43-2				•	•	•	•	•	•			
Type 43-3	•	•	•	•	•	•	•	•	•			
Type 43-5	•	•	•									
Type 43-6	•	•	•				•	•	•	•	•	•
Type 43-7				•	•	•	•	•	•			

[1] Material 1.4408

Materials

Body	Red brass [1] · 1.4408 [2] (Type 2431 and Type 2436 only) [3]
Sensor	
Thermowell	Copper or 1.4310
Capillary tube	Copper or 1.4310

[1] Not for ANSI
[2] Special version of Type 43-1 (G ½, G ¾, G 1 and DN 15, DN 25)
[3] Flanged body

Special versions

- Versions tested according to DIN EN 14597 (▶ **T 2181**)
- Capillary tube
- Internal parts resistant to mineral oils
- Fast-responding thermostats (vapor pressure principle)
- Small K_{VS} in DN 15 or G ½
- Stainless steel body for Type 43-1
- Flanged valve body of EN-GJS-400-18-LT for Type 43-2



Type 43-5

Self-operated Temperature Regulators

Typetested safety devices
Safety temperature limiter (STL) · Type 2439

Application

Temperature limitation in heating and water heating installations according to DIN 4747-1, DIN EN 12828, DIN EN 12953-6 and DIN 4753 · Tested according to DIN EN 14597

Special features

- Safety temperature limitation of the energy supply by closing and locking a valve using a spring mechanism
- The valve closes when the adjusted set point is reached, when the capillary tube breaks or when leakage occurs in the system
- Reset or start-up using a screwdriver, provided the defect has been eliminated and the temperature has fallen below the limit value

Versions

Safety temperature limiter (STL) consisting of the following components:

– Type 2431/2432/2433/2435/2436/2437 Valve and Type 2439 Safety Temperature Limiter with temperature sensor and thermowell, limit adjuster, capillary tube and connecting element with spring mechanism

Technical data

	Type 2439
Limit range	10 to 95 °C or 20 to 120 °C
Max. permissible ambient temperature	80 °C
Perm. temperature at the sensor	20 K above the adjusted limit
Capillary tube length	2 m
Conformity	CE
Data sheet	▶ **T 2185**

Materials

Connecting element with spring mechanism	PTFE, glass fiber reinforced
Sensor	Copper
Thermowell	Copper or CrNiMo steel
Capillary tube	Copper

Special versions

– With G ½ thermowell of CrNiMo steel
– With 5 m capillary tube
– With electric signal transmitter
– With reduced K_{VS} coefficient (DN 15 or G ½)

Combinations

– The safety temperature limiter can be combined with a Type 2430 Control Thermostat (TR/STL).
– Safety temperature monitor with differential pressure/flow rate regulation



Type 2439



Type 2432 Valve with Type 2439 Safety Temperature Limiter and Do3 K double adapter with two Type 2430 Control Thermostats

Self-operated Temperature Regulators

Typetested safety devices
Safety temperature monitor (STM) · Type 2403

Application

Temperature monitoring in heating and water heating installations according to DIN 4747-1, DIN EN 12828 and DIN 4735 · Tested according to DIN EN 14597

Special features

- The valve closes when the adjusted set point is reached, when the capillary tube breaks or when leakage occurs in the system
- Automatic reset or start-up, provided the defect has been eliminated and the temperature has fallen below the limit value.

Versions

Safety temperature monitors (STM)

Components:

– Type 2431/2432/2433/2435/2436/2437 Valve and Type 2403 Safety Temperature Monitor with temperature sensor, limit adjuster, capillary tube and connecting element with spring mechanism

Technical data

	Type 2403
Limit range	60 to 75 °C, 75 to 100 °C, 100 to 120 °C
Max. permissible ambient temperature	50 °C
Max. perm. temperature at the sensor	25 K above the adjusted set point
Capillary tube length	5 m
Conformity	CE
Data sheet	▶ **T 2183**

Materials

Connecting element	PPO with brass connection nut
Set point adjuster	PTFE, glass fiber reinforced
Sensor	1.4571
Capillary tube	Copper

Combinations

– The safety temperature monitor can be combined with a Type 2430 Control Thermostat (TR/STM).
– Safety temperature monitor with differential pressure/flow rate regulation

Further self-operated temperature regulators

– Type 2040: safety temperature monitor for cryogenic applications (see page 134)



Type 2432 Valve and
Type 2403 STM with
Type 2430 Control Thermostat

Self-operated Pressure Regulators

Pressure reducing valve · Type 2405
Excess pressure valve · Type 2406

CE

Application

Pressure regulation of flammable gases used as a source of energy or to control compressed air supply in process engineering applications

Special features

- Low-maintenance proportional regulators
- Compact regulator design providing excellent control accuracy
- Internal set point springs with set point adjustment using a nut on the actuator
- Fulfills strict fugitive emission requirements (TA Luft)
- Minimum leakage class IV
- Suitable for vacuum

Versions

– Pressure reducing valve or excess pressure valve with flange or threaded connections · Soft-seated plug · DIN and ANSI versions

Technical data

	Type 2405	Type 2406
Pressure reducing valve	•	–
Excess pressure valve	–	•
Set point range	5 mbar to 10 bar	
K_{VS} coefficient	0.016 to 32	
Nominal size	DN 15 to 50	
Pressure rating	PN 16 to 40	
Medium temperature range	-20 to +60 °C [1]	
Conformity	CE	
Data sheets	▶ **T 2520**	▶ **T 2522**

[1] 0 to 150 °C: for unbalanced version with FKM diaphragm/soft seal

Materials

Body	EN-GJL-250, EN-GJS-400-18-LT · 1.0619 · 1.4404 · 1.4408
Seat	1.4112, 1.4404
Plug	1.4305
Plug seal, diaphragm	EPDM, FKM, NBR
Springs	1.4310
Actuator housing	1.0332, 1.4301

Special versions

– FDA-compliant materials for the food processing and pharmaceutical industries
– Version according to NACE (sour gas)
– With seal and leakage line connection
– With directly connected control line



Type 2405 or Type 2406 with flanges

Self-operated Pressure Regulators

Pressure reducing valve · Type 41-23
Excess pressure valve · Type 41-73

Application

Pressure set points from 0.05 to 28 bar (0.75 to 400 psi) · Suitable for liquids, gases and vapors up to 350 °C (600 °F)

Special features

- Low-maintenance, medium-controlled proportional regulators requiring no auxiliary energy
- Frictionless plug stem seal with stainless steel bellows
- Exchangeable positioning springs and actuator
- Single-seated valve with upstream and downstream pressure balancing

Versions

– **Type 41-23:** Pressure reducing valve
Type 2412 Valve and Type 2413 Actuator with EPDM rolling diaphragm

– **Type 41-73:** Excess pressure valve
Type 2417 Valve and Type 2413 Actuator with EPDM rolling diaphragm

Technical data

Valve	**Type 2412, Type 2417**		
Nominal size	DN 15 to 50	DN 65 to 80	DN 100
	NPS ½ to 2	NPS 2½ and 3	NPS 4
Max. Δp	25 bar (360 psi)	20 bar (290 psi)	16 bar (230 psi)
Conformity	CE		
Actuator Type	2413		
Set point range	0.05 to 0.25 bar, 0,1 to 0.6 bar, 0,2 to 1.2 bar, 0.8 to 2.5 bar, 2 to 5 bar, 4.5 to 10 bar, 8 to 16 bar		
	0.75 to 3.5 psi, 1.5 to 8.5 psi, 3 to 17 psi, 10 to 35 psi, 30 to 75 psi, 65 to 145 psi, 115 to 230 psi		
Max. permissible temperature	Gases 350 °C (660 °F), at the actuator max. 80 °C (175 °F) Liquids 150 °C (300 °F), with compensation chamber 350 °C (660 °F) Steam with compensation chamber 350 °C (660 °F)		
Data sheets	**▶ T 2512 (DIN),▶ T 2513 (ANSI), ▶ T 2517 (DIN), ▶ T 2518 (ANSI)**		

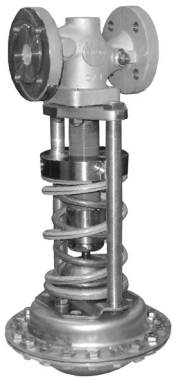

Type 41-23



Type 41-23, stainless steel version

Materials

Valve		Type 2412, Type 2417			
Pressure rating		PN 16	PN 25	PN 40	PN 40
		Class 125	Class 150	Class 300	Class 300
Max. permissible temperature		300 °C	350 °C	350 °C	350 °C
		570 °F	660 °F	660 °F	660 °F
Body	DIN	EN-GJL-250	EN-GJS-400-18-LT	1.0619	1.4408
	ANSI	A126 B	A216 WCC		A351 CF8M
Seat, plug		CrNiMo steel/CrNiMo steel			CrNiMo steel
Actuator		**Type 2413**			
Diaphragm cases		Sheet steel DD11 [1]			
Diaphragm		EPDM with fabric reinforcement, FKM for mineral oils NBR			

[1] In corrosion-resistant version (CrNi steel)

Special versions

- Control line kit for tapping the pressure directly at the valve body (accessories) ▶ **T 2595**
- With internal parts made of FKM, e.g. for use with mineral oils
- Free of oil and grease for oxygen with FKM diaphragm
- EPDM diaphragm with PTFE protective facing
- Actuator for remote set point adjustment (autoclave control)
- Bellows actuator for valves DN 15 to 100, set point ranges 2 to 6, 5 to 10, 10 to 22 or 20 to 28 bar
- Valve with flow divider ST 1 (DN 15 to 100) or ST 3 (DN 65 to 100) for particularly low-noise operation with gases and vapors
- Seat and plug with Stellite® facing · Plug with PTFE/EPDM/FKM/NBR soft seal
- Wetted plastic parts conforming to FDA regulations (max. 60 °C)
- Lubricants for ultrapure water or gas



Type 41-73

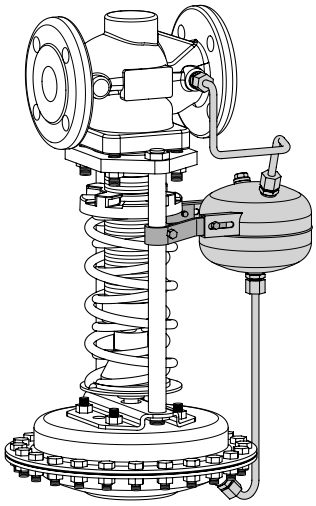

Control line kit with compensation chamber for Type 41-23 or Type 41-73

Self-operated Pressure Regulators

Pressure reducing valves · Type 44-0 B and Type 44-1 B
Excess pressure valve · Type 44-6 B

Application

Pressure set points from 0.2 to 20 bar (3 to 290 psi), suitable for non-flammable gases, liquids and steam

Special features

- Low-maintenance proportional regulators requiring no auxiliary energy
- Stainless steel operating bellows as operating element
- Compact design with particularly low overall height
- Spring-loaded, single-seated valve with balanced plug

Versions

– **Type 44-0 B:** Pressure reducing valve
Valve PN 25 (Class 300), for steam up to 200 °C (390 °F) · Unbalanced or balanced

– **Type 44-1 B:** Pressure reducing valve
Valve PN 25 (Class 300) for air up to 150 °C (300 °F) · Nitrogen up to 200 °C (390 °F), other gases up to 80 °C (175 °F) · Liquids up to 150 °C (300 °F) · Unbalanced or balanced

– **Type 44-6 B:** Excess pressure valve
Valve PN 25 (Class 300) for air up to 150 °C (300 °F) · Nitrogen up to 200 °C (390 °F), other gases up to 80 °C (175 °F) · Liquids up to 150 °C (300 °F) and steam up to 200 °C (390 °F) · Unbalanced or balanced (standard)

Technical data

Regulator	**Pressure reducing valve**		**Excess pressure valve**
	Type 44-0 B	**Type 44-1 B**	**Type 44-6 B**
Connection (female thread or flanges)	G ½, G ¾, G 1, ½ NPT, ¾ NPT, 1 NPT, DN 15 to 50 (NPS ½, NPS 1)		
Pressure rating	PN 25 (Class 300)		
Set point range	0.2 to 2 bar, 1 to 4 bar, 2 to 6 bar, 4 to 10 bar, 8 to 20 bar [1)]		
	3 to 30 psi, 15 to 60 psi, 30 to 90 psi, 60 to 150 psi, 120 to 290 psi [1)]		
Conformity	CE		
Data sheets	**▶ T 2626, ▶ T 2627, ▶ T 2628**		

1) Set point range not for DN 40 and 50

K_{VS} or C_V coefficients

Screwed ends	**Type 44-1 B, Type 44-6 B, Type 44-0 B**		
Connection	G ½ (½ NPT)	G ¾ (¾ NPT)	G 1 (1 NPT)
K_{VS} [1)]	3.2	4	5
C_V	4	5	6

Flanges	**Type 44-1 B, Type 44-6 B, Type 44-0 B**			
Connection	DN 15 (NPS ½)	DN 25 (NPS 1)	DN 40	DN 50
K_{VS} [2)]	3.2	5	16	20
C_V	4	6	–	–

1) Special K_{VS} coefficients on request



Type 44-0 B
Body with screwed ends



Type 44-1 B
Body with screwed ends



Type 44-1 B
Flanged valve body



Type 44-6 B
Flanged valve body

Materials

Body	Red brass CC491K/CC499K C83600	Spheroidal graphite iron EN-GJS-400-18-LT	Stainless steel 1.4408
Seat	Stainless steel 1.4305		1.4404
Plug			
Type 44-1 B	Brass (free of dezincification), soft seal		1.4404, metal or soft seal
Type 44-6 B	Brass (free of dezincification), soft seal		1.4404, metal or soft seal
Type 44-6 B (steam regulator)	Brass (resistant to dezincification) with PTFE soft seal or metal seal		1.4404, with PTFE soft seal or metal seal
Type 44-0 B	Brass (resistant to dezincification) with PTFE soft seal Balanced: 1.4404, metal seal		1.4404, with PTFE soft seal
Operating/ balancing bellows	Steel: 1.4571		1.4571

Connections: Type 44-0 B, Type 44-1 B and Type 44-6 B

Body material	Connection	DIN							ANSI				
		G			DN				NPT			NPS	
		½	¾	1	15	25	40	50	½	¾	1	½	1
Stainless steel/red brass	Female thread	•	•	•									
Stainless steel	Flange				•	•							
Spheroidal graphite iron	Flange				•	•	•	•					
A351 CF8M	Female thread								•	•	•		
A351 CF8M	Flange											•	•



Type 44-6 B
Body with screwed ends

Self-operated Pressure Regulators

Pressure reducing valve with pilot valve · Type 2333
Excess pressure valve with pilot valve · Type 2335

Application

Pressure set points from 2 to 28 bar, suitable for liquids, gases and vapors up to 350 °C

The attached pilot valve (either a pressure reducing valve or excess pressure valve) determines the function of the regulator.

Special features

- Pressure regulator, pilot operated by the process medium with excellent control properties
- High control accuracy
- Set point adjustment at the pilot valve

Versions

– **Type 2422:** Modified, with suitable pilot valve with set point adjuster, valve conforming with DIN, ANSI or JIS standards

– **Type 2333:** Pressure reducing valve to regulate the downstream pressure p_2 to the adjusted set point. Suitable pilot valves: Type 44-1 B or Type 44-0 B, Type 44-2, Type 41-23, Type 2405

– **Type 2335:** Excess pressure valve to regulate the upstream pressure p_1 to the adjusted set point. Suitable pilot valves: Type 44-6 B, Type 44-7, Type 41-73, Type 2406



Type 2333 (DN 150)
with Type 50 ES Pilot Valve



Type 2335 (DN 150)
with Type 44-7 Pilot Valve

Technical data

Valve		**Type 2422**					
Nominal size		DN 125	DN 150	DN 200	DN 250	DN 300	DN 400
K_{VS}	Balanced by a bellows	200	360	520	620	–	–
$K_{VS}1$ [1]		150	270	400	500	–	–
$K_{VS}3$ [2]		100	180	260	310	–	–
K_{VS} coefficient	Balanced by a diaphragm	250	380	650	800	1250	2000
Set point range		Depending on the pilot valve used					
Conformity		CE					
Data sheets		▶ **T 2552**, ▶ **T 2554**					

[1] With flow divider ST 1
[2] With flow divider ST 3

Materials

Valve		**Type 2422 · Balanced by a bellows or diaphragm**			
Pressure rating		PN 16	PN 16/25	PN 16, 25 and 40	
Body	DIN	EN-GJL-250	EN-GJS-400-18-LT	1.0619	CrNiMo steel
	ANSI	A126 B	–	A216 WCC	A351 CF8M
Valve seat		1.4006			1.4404
Plug (standard)		1.4301 with PTFE soft seal			

Special versions

- With flow divider for noise reduction
- Version resistant to mineral oils
- Version for flammable gases
- Free of non-ferrous metal
- Lowest minimum differential pressure
- Larger nominal sizes
- Reduced K_{VS} coefficient
- Version for deionized water
- For oxygen
- With solenoid valve for emergency function



Type 2333 (DN 150)
with Type 50 ES Pilot Valve



Type 2335 (DN 150)
with Type 44-7 Pilot Valve

Self-operated Pressure Regulators

Pressure reducing valve · Type 44-2
Safety shut-off valves (SSV) · Types 44-3 and 44-9
Excess pressure valve · Type 44-7
Safety excess pressure valve (SEV) · Type 44-4

Application

Pressure set points from 0.2 to 11 bar, suitable for liquids, air and nitrogen · SSV and SEV to protect district heating systems

Special features

- Low-maintenance proportional regulators requiring no auxiliary energy
- Tight-closing single-seated valve with balanced plug
- SEV and SSV: typetested for water by the German technical surveillance association (TÜV)

Versions

Series 44 Pressure Regulators with set point ranges from 0.2 to 11 bar
Valve sizes DN 15 to 50 with welding ends and DN 32 to 50 with flanged valve body

– **Type 44-2:** Pressure reducing valve with one operating diaphragm
– **Type 44-3:** Safety shut-off valve (SSV) with pressure reducing valve and two operating diaphragms · Typetested for water by TÜV
In the event of a diaphragm rupture, the valve continues to function.
– **Type 44-9:** Safety shut-off valve (SSV) with pressure reducing valve and two operating diaphragms · Typetested for water by TÜV
In the event of a diaphragm rupture, the valve closes.
– **Type 44-7:** Excess pressure valve with one operating diaphragm
– **Type 44-4:** Safety excess pressure valve (SEV) with two operating diaphragms · Typetested for water by TÜV
In the event of a diaphragm rupture, the valve opens.



Types 44-3/-9



Type 44-4 (SEV)

Technical data

Nominal size	DN 15	DN 20	DN 25	DN 32	DN 40	DN 50
K_{VS}	1/2.5/4	6.3	8	12.5	16	20
Max. permissible temperature	150 °C					
Set point range						
Type 44-2	0.5 to 2 bar, 1 to 4 bar, 2 to 4.2 bar, 2.4 to 6.3 bar, 6 to 10.5 bar					
Type 44-3 (SSV)	1 to 4 bar [1], 2 to 4.2 bar, 2.4 to 6.3 bar, 6 to 10.5 bar					
Type 44-9 (SSV)	1 to 4 [1] bar, 2 to 4.2 bar, 2.4 to 6.3 bar, 6 to 10.5 bar					
Type 44-7	0.1 to 1 bar, 0.5 to 2 bar, 1 to 4 bar, 2 to 4.4 bar, 2.4 to 6.6 bar, 6 to 11 bar					
Type 44-4 (SEV)	1 to 4 [1]/2 to 4.4/2.4 to 6.6/6 to 11					
Conformity	CE					
Data sheets	**▶ T 2623, ▶ T 2723, ▶ T 2630, ▶ T 2632**					

[1] Without type test

Materials

Body	Red brass CC499K, EN-GJS-400-18-LT [1)]
Seat	Stainless steel 1.4305
Plug	Brass 2.0402 and 1.4305 with EPDM soft seal

1) Additional version for Type 44-3, DN 32 to 50: valve with flanged body

Special versions

- Internal parts resistant to mineral oils
- Special K_{VS} coefficients for DN 15



Types 44-3/-9



Type 44-4 (SEV)

Self-operated Pressure Regulators for the Food Processing Industry

Excess pressure valves · Types 2371-00 and 2371-01
Pressure reducing valves · Types 2371-10 and 2371-11

Application

Pressure reducing valves or excess pressure valves for the food and pharmaceutical industries for liquids and gases

Conformity

The Type 2371 Pressure Regulators comply with the following regulations and standards:

– FDA 21 CFR 177.1550, FDA 21 CFR 177.2600, FDA 21 CFR 177.2415
– NSF H1
– EC 1935/2004
– EU 10/2011
– USP Class VI-121 °C
– EC 2023/2006
– Free of animal-derived ingredients (ADI-free)
– EC 999/2001, revision 2015: TSE/BSE free

Special features

- Proportional pressure regulators with cavity-free valve bodies made of stainless steel
- Wetted inside surfaces with a precision-lathed or polished finish
- Diaphragms monitored for leakage over a test connection

Excess pressure valve with diaphragm to control the inlet pressure to the adjusted set point

– **Type 2371-00:** Excess pressure valve with pneumatic set point adjustment
– **Type 2371-01:** Excess pressure valve with mechanical set point adjustment

Pressure reducing valve with diaphragm to control the outlet pressure to the adjusted set point

– **Type 2371-10:** Pressure reducing valve with pneumatic set point adjustment
– **Type 2371-11:** Pressure reducing valve with mechanical set point adjustment



Type 2371-00 with pneumatic set point adjustment



Type 2371-01 with mechanical set point adjustment and with stem locking

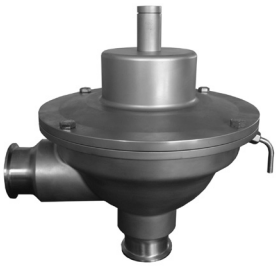

Type 2371-10



Type 2371-11

Technical data

Pressure regulators		Types 2371-00/-01	Types 2371-10/-11
Function		Excess pressure valve	Pressure reducing valve
Nominal size		DN 15 to 50	DN 15 to 50 [1]
		NPS ½ to 2	NPS ½ to 2 [1]
Body material		1.4409, 1.4404/CF3M, 316L	
Max. pressure		10 bar (150 psi)	10 bar (150 psi)
Set point ranges		0.3 to 6 bar (4.4 to 90 psi)	0.4 to 6 bar (6 to 90 psi)
Connection	Flanges	•	•
	Welding ends	•	–
	Thread	•	•
	Clamps	•	•
Leakage, based on K_{VS} coefficient		Metal seal: ≤0.05 % Soft seal: ≤0.01 %	
Medium temperature range		0 to 160 °C (32 to 320 °F)	
Max. sterilization temperature		180 °C (356 °F) up to 30 min	
Cleaning	CIP	•	•
	SIP	•	•
Conformity		CE·EAC	
Data sheets		▶ **T 2642**	▶ **T 2640**

[1] Type 2371-10 only in DN 32 to 50/NPS 1¼ to 2



Type 2371-00 with pneumatic set point adjustment



Type 2371-01 with mechanical set point adjustment and stem locking

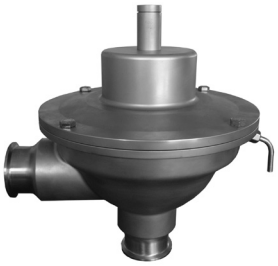

Type 2371-10



Type 2371-11

Self-operated Pressure Regulators

Pressure reducing valve · Type 2422/2424
Excess pressure valve · Type 2422/2425

Application

Pressure regulators for set points from 0.05 to 2.5 bar · Valve sizes DN 125 to 250 · Pressure rating PN 16 to 40 · Suitable for liquids, gases and vapors up to 350 °C

Special features

- Low-maintenance, medium-controlled proportional regulators requiring no auxiliary energy
- Wide set point range and convenient set point adjustment using a nut
- Exchangeable set point springs and actuator
- Spring-loaded, single-seated valve with upstream and downstream pressures balanced by a stainless steel bellows or by a balancing diaphragm
- Standard low-noise plug · Special version with flow divider ST 1 or ST 3 for further noise level reduction
- Reduced K_{VS} coefficients to adapt the regulator to the operating conditions

Versions

– **Type 2422/2424:** Pressure reducing valve

Type 2422 Valve balanced by a bellows or a diaphragm with soft-seated plug · Body of cast iron, spheroidal graphite iron, cast steel or cast stainless steel · Type 2424 Actuator with EPDM rolling diaphragm

– **Type 2422/2425:** Excess pressure valve

Type 2422 Valve balanced by a bellows or a diaphragm with soft-seated plug · Body of cast iron, spheroidal graphite iron, cast steel or cast stainless steel · Type 2425 Actuator with EPDM rolling diaphragm

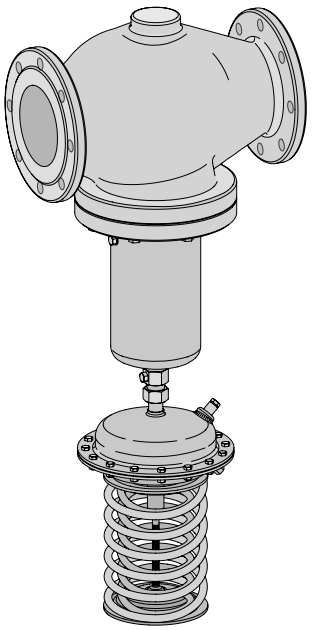

Type 2422/2424

Technical data

Valve		**Type 2422**
Nominal size		DN 125/150/250 (NPS 6/8/10)
Pressure rating		PN 16/25/40 (Class 125/150/300)
Max. permissible temperature	Valve body	Up to 350 °C
	Valve plug balanced by a bellows	Metal seal: 350 °C, PTFE soft seal: 220 °C, EPDM or FKM soft seal: 150 °C, NBR soft seal: 80 °C
	Valve plug balanced by a diaphragm	150 °C
K_{VS} coefficient		40...800
Max. Δp		10 to 20 bar
Leakage class according to IEC 60534-4		≤0.05 % of K_{VS} coefficient
Conformity		CE
Type 2424/Type 2425 Actuator		
Set point ranges		0.05 to 0.25 bar, 0.1 to 0.6 bar, 0.2 to 1 bar, 0.5 to 1.5 bar, 1 to 2.5 bar
Max. perm. pressure		320 cm² actuator area: 3 bar, 640 cm² actuator area: 1.5 bar
Max. permissible temperature		Gases, at the actuator 80 °C Liquids 150 °C, with compensation chamber max. 350 °C · Steam with compensation chamber max. 350 °C
Data sheets		**▶ T 2547 (DIN), ▶ T 2548 (ANSI), ▶ T 2549 (DIN), ▶ T 2550 (ANSI)**

Special versions

- With flow divider ST 1 or ST 3 for particularly low-noise operation
- With metal-seated plug
- With FKM rolling diaphragm, e.g. for mineral oils or flammable gases
- With NBR rolling diaphragm for flammable gases
- Version completely in stainless steel for pressure rating PN 16 to 40
- Versions for oxygen service
- Actuator with two diaphragms
- With metal cover to protect the set point springs



Type 2422/2425

Materials

Valve	**Type 2422 · Balanced by a bellows**			
Pressure rating	PN 16	PN 25	PN 16, 25 and 40	
Valve body	Cast iron EN-GJL-250	Spheroidal graphite iron EN-GJS-400-18-LT	Cast steel 1.0619	Stainless steel 1.4408
Seat	1.4006			1.4404
Plug	1.4404			1.4404 with PTFE seal
Seal for soft-seated plug	PTFE · EPDM/FKM · NBR			
Plug stem	1.4301			
Metal bellows	1.4571			
Bottom section	1.0305			1.4571
Body gasket	Graphite on metal core			
Valve	**Type 2422 · Balanced by a diaphragm**			
Pressure rating	PN 16	PN 16/25	PN 16, 25 and 40	
Valve body	Cast iron EN-GJL-250	Spheroidal graphite iron EN-GJS-400-18-LT	Cast steel 1.0619	Stainless steel 1.4408
Valve seat	Red brass [1]			
Plug	Red brass [1] · With EPDM soft seal or with PTFE soft seal			
Pressure balancing	Balancing cases made of sheet steel DD11 · EPDM balancing diaphragm for liquids and non-flammable gases or NBR diaphragm for flammable gases			
Gasket	Graphite on metal core			
Actuator	**Type 2424, Type 2425**			
Diaphragm cases	DD 11			1.4301
Diaphragm	EPDM with fabric reinforcement · FKM · NBR			
Guide bushing	DU bushing			PTFE
Seals	EPDM · FKM · NBR			

[1] Special version 1.4409

Self-operated Pressure Regulators

Pressure reducing valve with pilot valve for small set point ranges (mbar)
Type 2404-1

Application

Pressure reducing valve for set points from 3 to 100 mbar (0.045 to 1.5 psi) · Valve size DN 25 to 150 (NPS 1 to 6) · Suitable for gases at temperatures from -20 to +90 °C (-5 to +195 °F)

Special features

- Pilot control provides excellent control accuracy
- Soft-seat plug provides bubble-tight shut-off performance
- Meets strict emission requirements (TA Luft)
- Suitable for sour gas service (NACE)

Versions

– **Type 2404-1:** Pilot-operated pressure reducing valve consisting of: Type 2406 Main Valve, Type 2405 Pilot Valve, Type 2441 Input Pressure Regulator, M2404-1 mounting kit



Type 2404-1

Technical data

Nominal size	**DN 25 to 150 (NPS 1 to 6)**
Pressure rating	PN 16 to 40 (Class 125, 150, 300)
K_{VS} coefficient (C_V coefficient)	8 to 380/9.4 to 450
Ambient temperature range	-20 to +90 °C (-5 to +195 °F) [1]
Set point ranges	3 to 10 mbar/5 to 30 mbar/25 to 100 mbar
	0.045 to 0.15 psi/0.075 to 0.45 psi/0.35 to 1.5 psi
Leakage class according to ANSI/ FCI 70-2 or IEC 60534-4	Soft-seated, minimum Class IV
Max. input pressure	12 bar (175 psi) [1]
Differential pressure Δp_{min}	1 bar (15 psi)
Conformity	CE
Data sheet	▶ **T 2538**

[1] Higher values on request

Materials

Body	A126B, A216 WCC, A351 CF8M · EN-GJL-250, 1.0619, 1.4408
Seat	316L [1]
Plug	316L [1]

[1] NPS 6 (DN 150): CF3M (1.4409)

Special version

– With FDA-compliant materials
– For sour gas service (NACE)
– Actuator of pilot valve with seal and leakage line connection

Self-operated Pressure Regulators

Excess pressure valve with pilot valve for small set point ranges (mbar)
Type 2404-2

Application

Excess pressure valve for set points from 5 to 200 mbar (0.075 to 3 psi) · Nominal size DN 65 to 400 (NPS 2½ to 16) · Suitable for gases at temperatures from -20 to +90 °C (-5 to +195 °F)

Special features

- Pilot control provides excellent control accuracy
- Soft-seat plug provides bubble-tight shut-off performance
- Meets strict emission requirements (TA Luft)
- Suitable for sour gas service (NACE)

Versions

– **Type 2404-1:** Pilot-operated excess pressure valve consisting of: Type 2406 or Type 2422 Main Valve, Type 2406 Pilot Valve, Type 2441 Input Pressure Regulator, M2404-2 mounting kit



Type 2404-2

Technical data

Nominal size	**DN 65 to 150 (NPS 2½ to 6)**
Pressure rating	PN 16, 40 (Class 150, 300)
K_{VS} coefficient	50 to 380 (C_V 60 to 450)
Ambient temperature range	-20 to +90°C (-5 to +195 °F) [1]
Set point ranges	5 to 15 mbar/10 to 30 mbar/25 to 60 mbar/50 to 200 mbar
	0.07 to 0.2 psi/0.15 to 0.4 psi/0.3 to 0.9 psi/0.7 to 3 psi
Leakage class according to ANSI/FCI 70-2 or IEC 60534-4	Soft-seated, minimum Class IV
Differential pressure Δp_{min}	12 bar (175 psi)
Conformity	CE
Data sheet	▶ **T 2540**

[1] Higher values on request

Materials

Body	A126B, A216 WCC, A351 CF8M · EN-GJL-250, 1.0619, 1.4408
Seat	316L
Plug	316L

Special version

– Version with FDA-compliant materials
– Versions for sour gas service (NACE)
– Actuator of pilot valve with seal and leakage line connection

Type 42-10 RS Check Valve (backflow protection)

Application

For safeguarding nitrogen and compressed air networks against backflow from directly connected systems. The regulator is open, provided the upstream pressure is at least 0.2 bar greater than the downstream pressure. It closes automatically when the downstream pressure rises to or above the value of the upstream pressure.

Special features

- Low-maintenance, medium-controlled proportional regulators requiring no auxiliary energy
- Fixed set point, external adjustment not possible
- Regulators delivered ready to install without supplementary devices, meaning no additional installations or start-ups are necessary
- Reliable functioning even in the event of a power failure or when other instruments in the control circuit malfunction
- Diaphragm rupture indicator, in the event of a diaphragm rupture, the undamaged operating diaphragm takes over the function of the damaged diaphragm
- Backflow only leads to a minimum amount of leakage due to the soft-seated plug
- Increasing downstream pressure supports tight shut-off of the valve
- Valve body optionally available in cast steel, cast stainless steel or forged stainless steel
- Wetted parts free of non-ferrous metal

Versions

Check valve in supply pipelines

– **Type 42-10 RS:** Type 2421 RS Valve and Type 2420 RS Actuator with two diaphragms · Fixed set point at 0.2 bar

Technical data

Valve	**Type 2421 RS**	
Nominal size	DN 15 to 250 (NPS ½ to 10)	
K_{VS} coefficient (C_V coefficient)	4 to 500 (4.5 to 585)	
Pressure rating	PN 25/40 (Class 150/300)	
Max. constant operating pressure	25 bar	
Max. perm. pressure acting on one side	45 bar	
Actuator	**Type 2420 RS**	
Diaphragm area	320 cm²	640 cm²
Δp set point, fixed	DN 15 to 150: 0.2 bar, DN 200 to 250: 0.3 bar	
Max. permissible temperature	Air and gases: 80 °C Water: 150 °C Steam with compensation chamber: 220 °C	
Conformity	CE	
Data sheet	**▶ T 3009, ▶ T 3010**	

Further versions

– Diaphragm rupture indication with pressure switch (optional)
– Stainless steel version (optional)
– Version for steam (on request)



Type 42-10 RS

Self-operated Flow Regulators

Flow regulator · Type 42-36

Application

For district heating supply networks and large heating systems. The devices regulate the flow rate of liquids to the adjusted set point.

Special features

- The valve closes when the flow rate rises
- Medium-controlled proportional regulators requiring no auxiliary energy
- Single-seated valve with a plug balanced by a stainless steel bellows or a balancing diaphragm (DN 65 to 250)

Versions

– **Type 42-36:** Regulator with Type 2423 Valve with Type 2426 Actuator, integrated restriction for adjusting the flow rate set point

Technical data

	Type 42-36
Nominal size	DN 15 to 250 (NPS ½ to 10)
Pressure rating	PN 16, 25, 40 Class 125, 250, 150, 300
Flow rate set point ranges	
Differential pressure at restriction: 0.2 bar	0.05 to 220 m³/h (0.2 to 970 US gal/min), balanced by a bellows: max. 350 m³/h (1540 US gal/min)
Differential pressure at restriction: 0.5 bar	0.15 to 300 m³/h (0.7 to 1300 US gal/min), balanced by a bellows: max. 520 m³/h (2290 US gal/min)
Max. permissible medium temperature	Steam/liquids with compensation chamber: 220 °C (430 °F), without compensation chamber: 150 °C (300 °F), air [1]: 80 °C (175 °F)
K_{VS} coefficient	4 [2] to 800
Conformity	CE
Data sheets	**▶ T 3015, ▶ T 3016**

[1] Special restriction for air and nitrogen up to 150 °C (300 °F) on request

[2] Special restriction for very low flow rates on request

Special version

– Suitable for mineral oils



Type 42-36

Materials

Valve		Type 2423			
Body material	DIN	EN-GJL-250	EN-GJS-400-18-LT	1.0619	1.4408
	ANSI	A126 B	–	A216 WCC	A351 CF8M
Pressure rating		PN 16	PN 25	PN 16, 25 and 40	
		Cl. 125/250	–	Cl. 150/300	
Seat					
Balanced by a bellows		1.4104, 1.4006			1.4404
Balanced by a diaphragm (max. 150 °C)		Red brass, DN 65 to 100: 1.4006			1.4409
Plug					
Balanced by a bellows		Up to DN 100: 1.4112, 1.4104, 1.4006 DN 125 and larger: 1.4404 with EPDM soft seal			1.4404
Balanced by a diaphragm (max. 150 °C)		Red brass, DN 65 to 100: 1.4104 and 1.4006			1.4409 [1]
Balancing bellows		DN 15 to 100: 1.4571, DN 125 and larger: 1.4404			
Balancing diaphragm		EPDM with fabric reinforcement			
Actuator		**Type 2426**			
Diaphragm cases		DD11			1.4301
Diaphragm		EPDM with fabric reinforcement			

[1] DN 65 to 100: 1.4404



Type 42-36

Self-operated Flow and Differential Pressure Regulators

Flow and differential pressure regulators · Types 42-37 and 42-39

Application

Flow and differential pressure regulators or flow and pressure regulators for district heating and extended heating systems

Special features

- The valve closes when the differential pressure or flow rate rises
- Low-noise, self-operated proportional regulators requiring little maintenance
- Single-seated valve with a plug balanced by a stainless steel bellows or a balancing diaphragm (DN 65 to 250)

Versions

– **Type 42-37:** Flow and differential pressure regulator consisting of Type 2423 Valve (DN 15 to 250) with integrated restriction and Type 2427 Actuator. Flow rate set point adjustable at the restriction; differential pressure set point adjustable at the actuator

– **Type 42-39:** Flow and differential pressure or pressure regulator consisting of Type 2423 Valve (DN 15 to 250) with integrated restriction and Type 2429 Actuator. Flow rate set point adjustable at the restriction; differential pressure or pressure set point adjustable at the actuator



Type 42-37

Technical data

	Type 42-37, Type 42-39
Nominal size	DN 15 to 250
Pressure rating	PN 16, 25, 40
Flow rate set point ranges	
Differential pressure at restriction: 0.2 bar	0.05 to 220 m³/h, balanced by a diaphragm up to 350 m³/h
Differential pressure at restriction: 0.5 bar	0.15 to 300 m³/h, balanced by a diaphragm up to 520 m³/h
Differential pressure or differential pressure set point ranges	0.1 to 2.5 bar [1]
Perm. medium temperature	Steam and liquids with compensation chamber: 220 °C, without compensation chamber: 150 °C
K_{VS} coefficient	4 [2] to 800
Conformity	CE
Data sheet	▶ **T 3017**

[1] Set point ranges up to 10 bar on request

[2] Special restriction for very low flow rates on request

Special ANSI and JIS versions (on request)

Materials

Valve	Type 2423			
Body material DIN	EN-GJL-250	EN-GJS-400-18-LT	1.0619	1.4408
Pressure rating	PN 16	PN 25	PN 16, 25 and 40	
Seat				
Balanced by a bellows	1.4104, 1.4006			1.4404
Balanced by a diaphragm (max. 150 °C)	Red brass, DN 65 to 100: 1.4006			1.4409
Plug				
Balanced by a bellows	Up to DN 100: 1.4112, 1.4104, 1.4006 DN 125 and larger: 1.4404 with EPDM soft seal			1.4404
Balanced by a diaphragm (max. 150 °C)	Red brass, DN 65 to 100: 1.4104 and 1.4006			1.4409 [1]
Balancing bellows	DN 15 to 100: 1.4571, DN 125 and larger: 1.4404			
Balancing diaphragm	EPDM with fabric reinforcement			
Actuator	**Type 2427, Type 2429**			
Diaphragm cases	DD11			1.4301
Diaphragm	EPDM with fabric reinforcement			

[1] DN 65 to 100: 1.4404



Type 42-39

Self-operated Flow and Differential Pressure Regulators

Differential pressure regulators with closing actuator · Types 42-24 and 42-28
Differential pressure regulators with opening actuator · Types 42-20 and 42-25

Application

For district heating systems, extended heating systems and industrial applications. To regulate differential pressures from 0.05 to 10 bar (0.75 to 145 psi). Suitable for liquids and vapors as well as air and other non-flammable gases

Special features

- Proportional regulators for district heating supply networks. Single-seated valve balanced by a stainless steel bellows or a balancing diaphragm. Low noise and low maintenance
- Types 42-24 and 42-28 · Valve closes when the differential pressure rises
- Types 42-20 and 42-25 · Valve opens when the differential pressure rises

Versions

– **Type 42-20, Type 42-28:** Type 2422 Valve, DN 15 to 100 (NPS ½ to 4), Type 2420/Type 2428 Actuator, fixed set point

– **Type 42-25, Type 42-24:** Type 2422 Valve, DN 15 to 250 (NPS ½ to 10), Type 2425/Type 2424 Actuator, adjustable set point

Technical data

	Type 42-24	Type 42-25	Type 42-28	Type 42-20
Nominal size	DN 15 to 250 (NPS ½ to 10)		DN 15 to 100 (NPS ½ to 4)	
Set point range Δp	0.05 to 10 bar		0.2, 0.3, 0.4 or 0.5 bar, fixed set point	
	0.75 to 145 psi		3, 4, 6 or 7 psi, fixed set point	
Conformity	CE			
Data sheets	▶ **T 3003 (DIN),** ▶ **T 3004 (ANSI),** ▶ **T 3007 (DIN),** ▶ **T 3008 (ANSI)**			

Materials

Valve [1]		Type 2422				
Valve body	DIN	EN-GJL-250	EN-GJS-400-18-LT	1.0619	1.4404 [2]	1.4408
	ANSI	A126 B	–	A216 WCC	A351 CF8M	
Pressure rating		PN 16	PN 25	PN 16, 25 and 40		
		Cl. 125/250	–	Cl. 125/150/300		
Actuator		Type 2420, Type 2424, Type 2425 and Type 2428				
Diaphragm cases		DD11			1.4301	
Diaphragm		EPDM [3], NBR [4] or FKM [3]				

1) Balanced by a bellows/diaphragm
2) DN 15, 25, 40 and 50
3) Max. 150 °C
4) Max. 80 °C



Type 42-24



Type 42-25



Type 42-28

Self-operated Flow and Differential Pressure Regulators

Differential pressure regulators with closing actuator · Types 45-1, 45-2, 45-3 and 45-4
Flow regulator · Type 45-9

Application

Differential pressure/flow regulators for district heating supply networks, large pipeline systems and industrial plants for liquids and gases

Special features

- The valve closes when the differential pressure or flow rate rises
- Low-maintenance, medium-controlled proportional regulators requiring no auxiliary energy
- Only one control line due to fixed connection to the actuator; Type 45-9 requires no external control line

Versions

The regulators consist of a valve with integrated (closing) actuator. Valve in DN 15 to 50 with welding ends, DN 32, 40 and 50 also available with flanged valve body
The valve of Type 45-9 is fitted with an adjustable restriction.

- **Type 45-1:** Differential pressure regulator with fixed set point
- **Type 45-2:** Differential pressure regulator with adjustable set point
  Installation in the high-pressure pipe
- **Type 45-3:** Differential pressure regulator with fixed set point
  For installation in the low-pressure line
- **Type 45-4:** Differential pressure regulator with adjustable set point
  For installation in the low-pressure line
- **Type 45-9:** Flow regulator with restriction to adjust the flow rate set point for differential pressure at the restriction of either 0.2 or 0.3 bar

Technical data

Nominal size	**DN 15**	**DN 20**	**DN 25**	**DN 32**	**DN 40**	**DN 50**
K_{VS}	2.5	6.3	8	12.5	16	20
Flanged body	–			12.5	20	25
Differential pressure set point range						
Types 45-1 and 45-3	0.1, 0.2, 0.3, 0.4 or 0.5 bar, fixed set point					
Types 45-2 and 45-4	0.1 to 4 bar				0.2 to 1 bar	
Data sheet	▶ **T 3124**					
Adjustable flow rate set points (for differential pressure at restriction of 0.2 bar)						
Type 45-9	0.01 to 15 m³/h					
Max. permissible temperature	Liquids: 130 °C, nitrogen and air: 150 °C [1]					
Conformity	CE					
Data sheet	▶ **T 3128**					

[1] Diaphragm and seals made of FKM, PN 25 version only

Materials

Body		Red brass CC499K	EN-GJS-400-18-LT [1]
Seat		Stainless steel 1.4305	
Plug	PN 16	Brass (resistant to dezincification) and plastic with EPDM [2] soft seal	
	PN 25	Brass (resistant to dezincification) with EPDM [2] soft seal	
Operating diaphragm		EPDM [2] with fabric reinforcement	

[1] For flanged valve body DN 32 to 50
[2] FKM in special version for mineral oils



Type 45-3



Type 45-4



Type 45-9

Self-operated Flow and Differential Pressure Regulators

For installation in the return pipe · Types 46-7 and 47-5
For installation in the flow pipe · Types 47-1 and 47-4

Application

Flow rate and differential pressure regulation or flow rate and pressure regulation in district heating supply networks and industrial plants

Special features

- Flow rate regulation, adjustable at the restriction in the valve
- Differential pressure or downstream pressure adjustable at the set point adjuster on the actuator
- Low-maintenance, medium-controlled proportional regulators requiring no auxiliary energy

The largest signal closes the valve. The valve closes when the differential pressure or flow rate rises.

Versions

Flow and differential pressure regulators with valves (DN 15 to 50) with integrated restriction to adjust the flow rate set point

Flow and differential pressure regulators for installation in the return pipe

– **Type 46-7:** Adjustable differential pressure set point
– **Type 47-5:** Fixed differential pressure set point

Flow and differential pressure regulators for installation in the flow pipe

– **Type 47-1:** Adjustable differential pressure or pressure set point
– **Type 47-4:** Fixed differential pressure set point

Technical data

Nominal size	**DN 15**	**DN 20**	**DN 25**	**DN 32**	**DN 40**	**DN 50**
K_{VS}	2.5	6.3	8	12.5	16	20
Flanged body	–			12.5	20	25
Differential pressure set point range						
Types 47-4 and 47-5	0.2, 0.3, 0.4 or 0.5 bar, fixed set point					
Types 46-7 and 47-1	0.2 to 0.6, 0.2 to 1 or 0.5 to 2 bar, continuously adjustable					
Flow rate set point for differential pressure at restriction of 0.2 bar	0.01 to 15 m³/h					
Max. permissible temperature	Liquids: 150 °C, nitrogen and air: 150 °C [1]					
Conformity [2]	CE					
Data sheet	**▶ T 3131**					

[1] Diaphragm and seals made of FKM, PN 25 version only
[2] Type 47-4 only with CE conformity

Materials

Body		Red brass CC491K/CC499K	EN-GJS-400-18-LT/395 [1]
Seat		Stainless steel 1.4305	
Plug	PN 16	Brass (resistant to dezincification) and plastic with EPDM [2] soft seal	
	PN 25	Brass (resistant to dezincification) with EPDM [2] soft seal	
Operating diaphragm		EPDM [2] with fabric reinforcement	

[1] For flanged valve body DN 32 to 50
[2] FKM in special version for mineral oils



Type 46-7



Type 47-5



Type 46-7 with flanged valve body (DN 32 to 50)

Pilot-operated Universal Regulators

Pressure, differential pressure, flow rate, temperature or combined regulators, optionally with additional electric actuator

Type 2334

Application

Pilot-operated pressure, differential pressure, flow rate, temperature or combined regulators, optionally with additional electric actuator
For heating and cooling plants, suitable for liquids from 5 to 150 °C and non-flammable gases up to 80 °C

Special features

- Main valve with flanges in DN 65 to 400
- Low-maintenance proportional regulators requiring no auxiliary energy
- Suitable for district heating plants conforming to DIN 4747-1
- Wide control range and high rangeability at low pressure loss
- Pilot operated by the medium, with a maximum of three pilot valves
- High stability and control accuracy even at considerably fluctuating upstream pressures
- Smooth opening and closing of the main valve
- Wide set point range and convenient set point adjustment at the pilot valve
- Numerous control functions and the possibility to combine several functions

Versions

– **Type 2423:** Valve with integrated restriction
– **Type 2422:** Valve without restriction

DN 65 to 100 with balancing bellows and external Type 2420 Actuator (closing) · DN 125 to 250 with integrated diaphragm actuator with internal closing spring
Pilot valve depending on the application

– Basic version: main valve (DN 65 to 250) and bypass line with strainer, Venturi nozzle and pilot valve (ready-to-install assembly), bypass line (DN 15) made of stainless steel, strainer and pilot valve depending on the application
– Version with bypass · Main valve DN 65 to 400
Bypass line DN 25 or 40 with strainer, Venturi nozzle and pilot valve (assembly on site)

Associated Information Sheet ▶ **T 3000**, Data Sheet ▶ **T 3210**

Special versions, DN 65 to 250

– Reduced K_{VS} coefficient
– Version for higher temperatures (steam)
– ANSI and JIS versions
– Flow divider for noise reduction (only valves balanced by a bellows)
– Oil-resistant
– Free of non-ferrous metal
– Pilot valves connected in parallel (instead of in series)
– Balanced by a metal bellows
– Free of graphite for deionized water
– External restriction
– With downstream attenuation plate for noise reduction

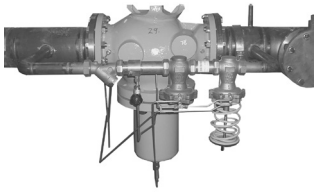

Type 2334 with Type 2422 Valve, DN 200 with operating bellows

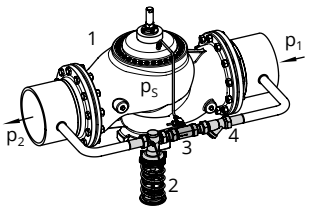

Type 2334 with bypass

1 Main valve
2 Pilot valve
3 Venturi nozzle
4 Strainer
p_s Control pressure
p_1 Upstream pressure
p_2 Downstream pressure

Pressure-independent Control Valve (PICV)

Flow regulator · Type 42-36 E

Application

Self-operated regulators combined with an electric actuator used to transmit the control signal of an electronic controller.

Sample application

Flow rate and temperature regulation, e.g. in district heating systems or extended heating or cooling networks

Special features

The valve closes when the flow rate rises. In addition, the control signal of an electric controller can be applied to influence the flow rate over the actuator.

- Device combination consisting of:
  - 1x valve with flanged body
  - 1x diaphragm actuator
  - 1x adapter to adjust the flow rate set point and to attach the electric actuator
- Control equipment tested according to DIN EN 14597 available

Versions

Valve DN 15 to 250, pressure rating PN 16 to 40, suitable for liquids from 5 to 150 °C, electric actuator with or without fail-safe action to change the flow rate set point depending on the control signal issued by an electric controller

– **Type 42-36 E:** Pressure-independent control valve with restriction to adjust the flow rate set point, installation in the flow or return pipe

Technical data

	Type 42-36 E
Nominal size	DN 15 to 250 (NPS ½ to 10)
Pressure rating	PN 16, 25, 40 (Class 125, 150, 300)
Flow rate set point ranges	
Differential pressure at restriction: 0.2 bar	0.5 to 220 m³/h (2.2 to 970 US gal/min), balanced by a diaphragm: max. 260 m³/h (1140 US gal/min)
Differential pressure at restriction: 0.5 bar	0.8 to 300 m³/h (3.5 to 1300 US gal/min), balanced by a diaphragm: max. 360 m³/h (1580 US gal/min)
Max. permissible medium temperature	150 °C
Max. permissible ambient temperature	50 °C
K_{VS} coefficient	4 [1] to 800
Conformity	CE
Data sheet	**▶ T 3018**

[1] Special restriction for very low flow rates on request



Type 42-36 E with Type 5827 Actuator



Type 42-36 E with Type 3374 Actuator

Materials

Valve	Type 2423			
Body material DIN	EN-GJL-250	EN-GJS-400-18-LT	1.0619	1.4408
Pressure rating	PN 16	PN 25	PN 16, 25 and 40	
Seat				
Balanced by a bellows	1.4104, 1.4006			1.4404
Balanced by a diaphragm (max. 150 °C)	Red brass, DN 65 to 100: 1.4006			1.4409
Plug				
Balanced by a bellows	Up to DN 100: 1.4112, 1.4104, 1.4006 DN 125 and larger: 1.4404 with EPDM soft seal			1.4404
Balanced by a diaphragm (max. 150 °C)	Red brass, DN 65 to 100: 1.4104 and 1.4006			1.4409 [1]
Balancing bellows	DN 15 to 100: 1.4571, DN 125 and larger: 1.4404			
Balancing diaphragm	EPDM with fabric reinforcement			
Actuator	**Type 2426**			
Diaphragm cases	DD11			1.4301
Diaphragm	EPDM with fabric reinforcement			

[1] DN 65 to 100: 1.4404



Type 42-36 E
with Type 5827 Actuator



Type 42-36 E with Type 3374 Actuator

Pressure-independent Control Valves

Flow regulators · Types 2488/58... and 2489/58...

Application

Flow regulation in district heating supply networks and industrial plants, combined with an electric actuator. A further operating parameter (e.g. temperature) can be regulated when combined with a district heating controller and electric actuator.

Special features

The valve closes when the flow rate rises. In addition, the control signal of an electric controller can be applied to influence the flow rate over the actuator.

- Low-maintenance, medium-controlled flow regulators requiring no auxiliary energy
- Single-seated valve with balanced plug
- Adapter to attach the electric actuator and to adjust the flow rate
- Control equipment tested according to DIN EN 14597 available

Versions

The combined regulators consist of valve, diaphragm actuator and Type 5827 Electric Actuator with fail-safe action or optionally Type 5857 or TROVIS 5757 Electric Actuator without fail-safe action for DN 15 to 25.

For indirectly connected systems (with heat transfer medium) for installation in low-pressure pipes

– **Type 2488/58...** Pressure-independent control valve with Type 5827 or Type 5857 Electric Actuator

– **Type 2489/58...** Pressure-independent control valve with with Type 5827 or Type 5857 Electric Actuator and additional Type 2430 Control Thermostat for temperature regulation



Type 2488 (DN 50)
with Type 5827 Actuator



Type 2488 (DN 25)
with Type 5827 Actuator

Technical data

Nominal size		DN 15	DN 20	DN 25	DN 32	DN 40	DN 50
K_{VS}	Body with screwed ends	2.5	6.3	8	12.5	16	20
	Flanged body	–			12.5	20	25
Flow rate set point for differential pressure at restriction of 0.2 bar		0.03 to 15 m³/h					
Max. permissible temperature		150 °C					
Connections		Welding ends, threaded ends, flanges					
Conformity		CE					
Data sheet		▶ **T 3135**					

Materials

Body		Red brass CC499K	EN-GJS-400-18-LT [1]
Seat		Stainless steel 1.4305	
Plug	PN 16	Brass (resistant to dezincification) and plastic with EPDM [2] soft seal	
	PN 25	Brass (resistant to dezincification) with EPDM [2] soft seal	
Operating diaphragm		EPDM [2] with fabric reinforcement	

[1] Version in spheroidal graphite iron for flanged valve bodies (DN 32, 40 and 50)

[2] FKM in special version for mineral oils

Strainers

With threaded connection · Type 1 N and Type 1 NI
With flanges · Type 2 N and Type 2 NI

Application

For protecting downstream plants, aggregates and measuring and control devices against impurities. Straining and collecting dirt particles carried along by the medium

Special features

- Compact design
- Easy removal of the collected dirt particles
- Easy replacement of the strainer insert

Versions

Y-shaped body with flanges or threaded end connections and wide-meshed strainer insert with an additional fine-meshed internal strainer

Types 1 N, 1 NI		Type 2 N, Type 2 NI	
Threaded connection		Flanges	
Type 1 N	Standard strainer insert	Type 2 N	Standard strainer insert
Type 1 N	Dual strainer insert	Type 2 NI	Dual strainer insert



Type 1 N/1 NI



Type 2 N and Type 2 NI

Technical data

Type	1 N		1 NI	2 N				2 NI
Pressure rating	PN 25			PN 10, 16, 25, 40				
Connection	Thread, G...			Flange, DN...				
	½ to 1	1¼ to 2	½ to 2	15 to 25	32 to 65	80 to 150	200 to 250	15 to 250
Mesh size	0.5 mm	0.75 mm	0.25 mm	0.5 mm	0.8 mm	1.25 mm	2 mm	0.25 mm
Conformity	CE			CE · EAC				
Data sheets	▶ **T 1010**			▶ **T 1015**				

Materials

Body	Red brass, brass	EN-GJL-250, EN-GJS-400-18-LT, 1.0619, cast stainless steel 1.4408
Filter	Stainless steel 1.4401	

Additional accessories for self-operated regulators (▶ **T 3095** and ▶ **T 2595)**

– Compression-type fittings
– Needle valve
– Compensation chamber
– Orifice plate
– Welding neck flange
– Control lines etc.

Safety Instrumented Systems · SIL solutions

Single and dual-channel emergency shutdown systems · Types 7315 and 7316
Single and dual-channel backflow protection units · Types 7301 and 7305

General SIL solutions

Our emergency shutdown systems include single-channel solutions for SIL 2 applications and dual-channel solutions for applications up to SIL 3.

SAMSON's safety-instrumented systems consist of one SAMSON on/off valve (single-channel) or two on/off valves (dual-channel), a SAMSON SIS logic solver and the application-specific sensor instrumentation.

All SAMSON SIL solutions use components that are perfectly tailored to one another. The safety integrity level of the safety-instrumented system (including all the PFD values) is documented in a manufacturer's declaration.

Application range

SAMSON's safety-instrumented systems are designed exclusively for **low demand mode**. SAMSON's emergency shutdown systems are available with a probability of failure (PFD_{AVG}) to meet SIL 2 or SIL 3 requirements.

Application

The Type 7315 Single-channel Emergency Shutdown System (SIL 2) and Type 7316 Dual-channel Emergency Shutdown System (SIL 3) protect a downstream network, plant or heat exchanger etc. against excessively high or excessively low pressures or temperatures.
Backflow protection units monitor the medium flow by measuring the differential pressure across the valve assembly unit.
The Type 7305 Backflow Protection Unit is used for dual-channel systems (SIL 3) and the Type 7301 Backflow Protection Unit for single-channel systems (SIL 2).

Versions

– **Emergency shutdown system**

The single-channel emergency shutdown system protects a downstream network, plant or heat exchanger etc. against excessively high or excessively low pressures or temperatures. If the temperature or pressure exceeds or falls below a certain limit, the emergency shutdown system is triggered.

– **Type 7315:** Single-channel emergency shutdown system
The use of the shut-off valve as a control valve is permitted.

– **Type 7316:** Dual-channel emergency shutdown system
The use of one of the shut-off valves as a control valve is permitted.

The reliability is indicated in the risk analysis of the plant in which the shut-off valve is installed.

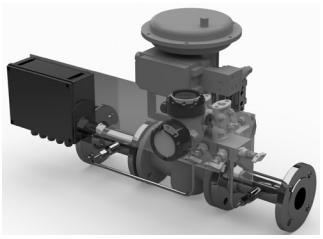

Type 7301 Single-channel Backflow Protection Unit

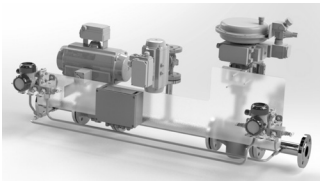

Type 7305 Dual-channel Backflow Protection Unit

– **Backflow protection**

A differential pressure transmitter is used in the backflow protection unit to monitor the medium flow across the valve assembly. It cannot be ruled out that the medium flows back once the flow rate falls below a certain limit. The backflow protection unit shuts off the pipeline in a safety-instrumented system.

– **Type 7301** Single-channel backflow protection unit
– **Type 7305** Dual-channel backflow protection unit

Technical data

Emergency shutdown	**Type 7315** [1]	**Type 7316** [1]
Single channel	•	–
Dual channel	–	•
Safety integrity level	SIL 2	SIL 3/SIL 2
Process medium	Gases and liquids according to the data sheets for Types 3241, 3251, 3510, 26d and 14d Valves ▶ **T 8015**, ▶ **T 8051**, ▶ **T 8091**, ▶ **T 26d**, ▶ **T 14d**	
Nominal size	DN 15 to 500 (larger nominal sizes on request)	
Pressure rating	PN 16 to 400 (higher pressure ratings on request)	
Standards	DIN EN 61508-1, DIN EN 61511-1, PED	
Bleed function	Optional	
Supply	Electric: 24 V DC; instrument air according to ISO 8573-1	
Feedback signal to meet SIL requirements	1x floating contact	

[1] Special versions on agreement

Backflow protection	**Type 7301** [1]	**Type 7305** [1]
Single channel	•	–
Dual channel	–	•
Safety integrity level	SIL 2	SIL 3/SIL 2
Process medium	Gases and liquids according to the data sheets for Types 3241 and 3251 Valves ▶ **T 8015**, ▶ **T 8051**	Gases and liquids according to the data sheets for Types 3241, 3251, 26d and 14d Valves ▶ **T 8015**, ▶ **T 8051**, ▶ **T 26d**, ▶ **T 14d**
Nominal size	DN 15 to 200 (larger nominal sizes on request)	
Pressure rating	PN 16 to 63 (higher pressure ratings on request)	
Standards	DIN EN 61508-1, DIN EN 61511-1, PED	
Bleed function	Without	DN 25
Supply	Electric: 24 V DC; instrument air according to ISO 8573-1	
Feedback signal to meet SIL requirements	1x floating contact	
Standard pressure loss during operation	200 mbar for liquids, 100 mbar for gases	
Differential pressure to trigger emergency shutdown	50 mbar for liquids, 30 mbar for gases	

[1] Special versions on agreement

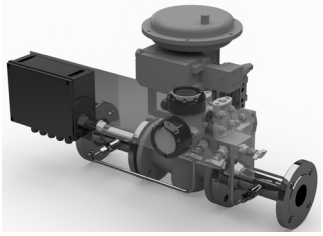

Type 7301 Single-channel Backflow Protection Unit

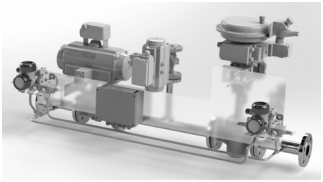

Type 7305 Dual-channel Backflow Protection Unit

Appendix

Index 186

Index

Type	Application/function	Page
1	Temperature regulator	145
1 N	Strainer	181
1 NI	Strainer	181
2 N	Strainer	181
2 NI	Strainer	181
251GR	Globe valve	47
4	Temperature regulator	145
4u	Temperature regulator	145
9	Temperature regulator	145
41-23	Pressure reducing valve	155
41-73	Excess pressure valve	155
42-10 RS	Backflow protection	169
42-20	Flow and differential pressure regulator	174
42-24	Flow and differential pressure regulator	174
42-25	Flow and differential pressure regulator	174
42-28	Flow and differential pressure regulator	174
42-36	Flow regulator	170
42-36 E	Pressure-independent control valve (PICV)	178
42-37	Flow and differential pressure regulator	172
42-39	Flow and differential pressure regulator	172
43-1	Temperature regulator	150
43-2	Temperature regulator	150
43-3	Temperature regulator	150
43-5	Temperature regulator	150
43-6	Temperature regulator	150
43-7	Temperature regulator	150
44-0 B	Pressure reducing valve	157
44-1 B	Pressure reducing valve	157
44-2	Pressure reducing valve	161
44-3	Safety shut-off valve	161
44-4	Safety excess pressure valve	161
44-6 B	Excess pressure valve	157
44-7	Excess pressure valve	161
44-9	Safety shut-off valve	161
45-1	Differential pressure regulator	175
45-2	Differential pressure regulator	175
45-3	Differential pressure regulator	175
45-4	Differential pressure regulator	175
45-9	Differential pressure regulator	175
46-7	Flow and differential pressure regulator	176
47-1	Flow and differential pressure regulator	176
47-4	Flow and differential pressure regulator	176
47-5	Flow and differential pressure regulator	176
62.7	Rotary plug valve	88
72.3	Rotary plug valve	83
73.3	Rotary plug valve	86
73.7	Rotary plug valve	86
82.7	Rotary plug valve	83
82.7-02	Rotary plug valve	83
2040	Safety temperature monitor	134
2212	Safety temperature limiter	148
2213	Safety temperature limiter	149
2231	Control thermostat	147
2232	Control thermostat	147
2234	Control thermostat	147
2333	Pressure reducing valve	159
2334	Pilot-operated universal regulator	177
2335	Excess pressure valve	159
2357-1	Pressure build-up regulator	130
2357-2	Excess pressure valve	130
2357-3	Pressure build-up regulator	133
2357-11	Pressure build-up regulator	131
2357-21	Excess pressure valve	131
2371-00	Excess pressure valve	163
2371-01	Excess pressure valve	163
2371-10	Pressure reducing valve	163
2371-11	Pressure reducing valve	163
2403	Safety temperature monitor	153
2404-1	Pressure reducing valve with pilot valve	167
2404-2	Excess pressure valve with pilot valve	168
2405	Pressure reducing valve	154
2406	Excess pressure valve	154
2422	Pressure reducing valve/excess pressure valve	146
2424	Pressure reducing valve	165
2425	Excess pressure valve	165
2439	Safety temperature limiter	152
2488/58...	Pressure-independent control valve (PICV)	180

Index

Type	Application/function	Page
2489/58...	Pressure-independent control valve (PICV)	180
3213	Globe valve	93
3214	Globe valve	93
3222	Globe valve	93
3222 N	Globe valve	93
3226	Three-way valve	93
3241	Globe valve	41
3244	Three-way valve	44
3246	Cryogenic valve	69
3248	Cryogenic valve	69
3251	Globe valve	48
3252	High-pressure valve	46
3253	Three-way valve	53
3254	Globe valve	53
3256	Angle valve	48
3260	Globe/three-way valve	93
3271	Pneumatic actuator	96
3277	Pneumatic actuator	96
3278	Pneumatic rotary actuator	99
3281	Steam conditioning valve	55, 129
3286	Steam conditioning valve	55
3310	Segmented ball valve	89
3321	Globe valve	91
3321CT	Globe valve	62
3323	Three-way valve	91
3331	Butterfly valve	72
3347	Hygienic angle valve	58
3349	Aseptic angle valve	61
3351	On/off valve	57
3353	Y-pattern valve	57
3354	Globe valve	57
3374	Electric actuator	100
3379	Pneumatic actuator	98
3381	Silencer	56
3510	Micro-flow valve	46
3531	Globe valve	92
3535	Three-way valve	92
3598	Cryogenic valve	69
3709	Pneumatic lock-up valve	116
3710	Reversing amplifier	118
3711	Quick exhaust valve	119
3724	Electropneumatic positioner	111
3725	Electropneumatic positioner	104

Type	Application/function	Page
3730-0	Electropneumatic positioner	104
3730-4	Positioner with PROFIBUS-PA communication	104
3730-5	Positioner with FOUNDATION™ fieldbus communication	104
3730-6	Positioner with HART® communication	104
3731-3	Positioner with HART® communication (flameproof)	104
3731-5	Positioner with FOUNDATION™ fieldbus communication (flameproof)	104
3755	Pneumatic volume booster	118
3766	Pneumatic positioner	103
3767	Electropneumatic positioner	103
3768	Limit switch	112
3776	Limit switch	112
3962	Solenoid valve	115
3963	Solenoid valve	115
3967	Solenoid valve	115
3969	Solenoid valve	115
4708	Supply pressure regulator	112
4744	Limit switch	112
4746	Limit switch	112
4747	Limit switch	112
52xx	Temperature sensors	139
5343	Safety temperature monitor	140
5344	Temperature regulator	140
5345	Safety temperature limiter	140
5347	Double thermostat (TR/STL)	140
5348	Double thermostat (TR/STM)	140
5349	Double thermostat (STM/STL)	140
5827	Electric actuator	100
5857	Electric actuator	100
6111	i/p converter	120
6116	i/p converter	120
6126	i/p converter	120
6132	i/p converter	120
6134	i/p converter	120
6661	TROVIS-VIEW software	141
7029	SAMSTATION supply pressure regulator	112
7110	Water bath desuperheater	125
7115	Cooling nozzle	125
7120	Steam generator	125
7121	Steam generator	125

Index

Type	Application/function	Page
7123	Movable base	125
7124	Blowdown vessel	126
7125	Blowdown vessel	125
7126	Feedwater system	125
7127	Boiler feedwater system	126
7128	Boiler room	126
7129	Steam generator	125
7140	Condensate recovery system	129
7141	Condensate vessel	129
7142	Flash vessel	129
7301	Single-channel backflow protection unit	182
7305	Dual-channel backflow protection unit	182
7315	Single-channel emergency shutdown system	182
7316	Dual-channel emergency shutdown system	182
7400	Measuring and control station	124
7510	Air receiver tank/emergency air supply	112
AC-X	Trim	56
Type 01a	PTFE-lined globe valve	74
Type 01b	PFA-lined globe valve	74
Type 06a	PTFE-lined micro-flow valve	74
Type 10a	Lined double-eccentric control butterfly valve	73
Type 10e	Centric control and shut-off butterfly valve	73
Type 14b	Double-eccentric control butterfly valve	73
Type 14p PSA	High-performance control and shut-off butterfly valve	71
Type 20a	PTFE-lined ball valve	75
Type 20b	PFA-lined ball valve	75
Type 22a	Stainless steel tank bottom valve	75
Type 26d	Stainless steel ball valve	75
Type 26s	Flanged ball valve	75
Type 27x	Sampling valve	75
Type 28	Piggable dosing valve	75
Type 29	Piggable dosing valve	75
Type 31a	Pneumatic rotary actuator	99
CoRe02	RS-232-/RS-485 converter or repeater	138
KAT	Ceramic-lined ball valve	78
KAV	Ceramic-lined ball valve	78
KBR	Stainless steel ball valve	80
KBRG	Stainless steel ball valve	80
KBRZ	Stainless steel ball valve	80
KFK	Ball valve	80
KFL	Ball valve	80
KGT	Ceramic-lined ball valve	78
KMA 190	Diaphragm valve	65
KMA 195	Diaphragm valve	65
KMA 205	Diaphragm valve	66
KMA 305	Diaphragm valve	66
KMA 395	Diaphragm valve	65
KMA 495	Diaphragm valve	65
KMA 905	Diaphragm valve	66
KMA 995	Diaphragm valve	66
KMD 188	Diaphragm valve	67
KMD 289	Diaphragm valve	67
KMD 385	Diaphragm valve	67
KMD 402	Diaphragm valve	67
KMD 982	Diaphragm valve	68
KMD 985	Diaphragm valve	68
KST	Ceramic-lined ball valve	78
KSV	Ceramic-lined ball valve	78
KZT	Ceramic-lined ball valve	78
LTR 43	High-pressure butterfly valve	72
Media 5	Differential pressure meter	122
Media 05	Differential pressure meter	122
Media 7	Digital transmitter for differential pressure	123
VDI 3805 records of products	Electronic product catalog to exchange data in building services (mechanical, electrical, plumbing)	141
SAM DISTRICT ENERGY	Industry-specific application for district heating and cooling	143
SAM GUARD®	Predictive analytics for the process industry	144
SAM HOME Gateway	Integration of Modbus controllers	138
SAM MOBILE+ Gateway	Polling over mobile networks or local area networks	138

Type	Application/function	Page
SAM VALVE MANAGEMENT		
	Industry-specific application for the smart valve diagnostics	142
SSC	Sliding disk valve	82
ST 1, 2, 3	Flow divider	56
SMS	Valve series	47
Steripur		
206	Diaphragm valve	64
217	Diaphragm valve	63
317	Diaphragm valve	63
397	Diaphragm valve	64
407	Diaphragm valve	63
417	Diaphragm valve	63
907	Diaphragm valve	64
997	Diaphragm valve	64
TROVIS		
3730-1	Electropneumatic positioner	104
3730-3	Positioner with HART® communication	104
3793	Positioner with HART® communication	109
3797	Positioner with PROFINET® communication	104
5573	Heating and district heating controller	135
5573-1	Heating and district heating controller	135
5578-E	Heating and district heating controller	136
5724-3	Electric actuator with process controller	101
5724-8	Electric actuator with process controller	101
5725-3	Electric actuator with process controller	101
5725-8	Electric actuator with process controller	101
5757-3	Electric actuator with process controller	101
5757-7	Electric actuator with process controller	101
I/O	Expansion module	135

Type	Application/function	Page
TROVIS SAFE		
3730-6	Digital positioner for safety-instrumented systems	109
3731-3	Digital positioner for safety-instrumented systems	109
3793	Digital positioner for safety-instrumented systems	109
TROVIS-VIEW	Configuration and user interface	108
Valve sizing		
	Software for calculating and sizing control valves	141
Modbus to meter bus gateway		
	Integration of M-Bus meters	138

SAMSON AND EVERYTHING FLOWS

PRODUCT CATALOG

SAMSON PRODUCT RANGE

samsongroup.com

2025-11 · K 20 EN