Technical Information Proservo NMS7

High Accuracy Performance Intelligent Tank Gauge for Food and Alcoholic and Non-alcoholic beverages



Outline

Proservo NMS7 of intelligent tank gauges is designed for high accuracy liquid level measurement in storage and process applications.
It fulfills the exact demands of tank inventory management, loss control, total cost saving and safe operation.

Typical areas of application include:

- Beer, Alcohol, Beverage, Soy Sauce, Cooking Oil

Tank mounted intelligence makes the NMS7 ideal for single or multi-task installation, converting a wide range of measurement functions including: Liquid level, Interface level, Spot density, Density profile, Tank bottom, Water Drop

Main Function

- Liquid Level, Interface Level, Spot Density, Tank Bottom, Water Dip Measurements

Features and Benefits

- SIL2 Certified
- Measures liquid to an accuracy of +/- 0.7 mm
- Measures two clear interface levels and specific gravity of up to three liquid phases
- Latest microtechnology keeps the design simple, lightweight and compact
- Wetted parts are completely separated from the electronic circuit
- Tank top mounting with 3" flange weighing 27kg
- Wide range of output signals including V1, RS 485, WM550, RS232C, M/S, Enraf BPM and HART protocol
- Suitable for atmospheric and high pressure applications up to 588kPa/5.88bar
- Maintenance prediction of the instrument
- Direct connection of spot or average temperature probes
- Easy to program using the E+H matrix system
- Robust IP67/NEMA 4X housing
- Selectable English, Japanese, or Chinese display
- Proactive safety diagnostics output to display and System Operators (patent pending)
- Easy connection to PLC via Modbus

Endress+Hauser
People for Process Automation

Table of Contents

Important Document Information 3
Notes on Safety Conventions and Symbols 3

Function and System Design 4
System Design 4
System Configuration 5
Major Application 5
Operating Principle 6
Typical Tank Installation 7
Measurement Terminology 8

Application Selection 9
Displacer Selection Guide 9
Displacer Types 9
Confirmation Point 10
Material Compatibility 10
Process Connection Size 10

Input and Output 11
Input for Local Devices 11
Output Parameters based on Communication Protocol 11
RS485 Modbus 12
Bidirectional Serial Pulse (V1 Protocol) 12
HART Protocol 12
Whessoematic 550 13
Mark/Space 13
Enraf Bi Phase Mark (BPM) 13
Analogue Output 14
Relay 14

Wiring for Primary Input and Output 16
V1 Serial Pulse Modbus RS 485 HART Enraf BPM 16
Whessoematic 550 17
Mark/Space 18
Cable Entry 19
Overvoltage Protection 19
Supply Voltage 19
Power Consumption 19
Safe Electrical Isolation 19

Performance Characteristics 20
Maximum Measured Error 20
Compensation 20

Operating Conditions: Environment 21
Modbus (RS485 Output) 21
Sakura V1 Serial Pulse Output 21
Enraf Bi Phase Mark Output 22
HART Output 22
Whessoematic 550 (WM 550) Output 22
Varec Mark Space (M/S) Output 23
Ambient Temperature 23
Storage Temperature 23
Liquid Temperature 23
Degree of Protection 23
Electromagnetic Compatibility (EMC) 23

Operating Condition: Process 24
Process Pressure 24
Measuring Range 24

Mechanical Construction 25
Design and Dimensions 25
Housing Materials of Construction 25
Weight 25
Flange Type 25
Measuring Wire 25
Displacer 26
Cable Entry 26

Human Interface 27
Operating Concept 27
Display (LCD) 27
Programming 27
Memo Function 27

Advanced Maintenance 28
Maintenance Prediction 28
Maintenance 28
Proactive Safety 28

Certificates and Approval 29
CE Mark 29
Ex Approvals 29
Overspill Prevention 29
SIL 29
External Standards and Guidelines 29

Order Information 30
NMS7 30

Accessories 32
Power + Control Switch 32
Reducing Flange 33

Supplementary Documentation 34
Technical Information 34
Operating Manual 34
Compact Instructions 34
Functional Safety Manual 34

Important Document Information

Notes on Safety Conventions and Symbols

Symbols for Safety Conventions

Symbol	Meaning
 A0011189-EN	**DANGER!** This symbol alerts you to a dangerous situation. Failure to avoid this situation will result in serious or fatal injury.
 A0011190-EN	**WARNING!** This symbol alerts you to a dangerous situation. Failure to avoid this situation can result in serious or fatal injury.
 A0011191-EN	**CAUTION!** This symbol alerts you to a dangerous situation. Failure to avoid this situation can result in minor or medium injury.
 A0011192-EN	**NOTICE!** This symbol contains information on procedures and other facts which do not result in personal injury.

Symbols for Certain Types of Information

Symbol	Meaning
 A0011182	**Allowed** Indicates procedures, processes or actions that are allowed.
 A0011183	**Recommendation** Indicates procedures, processes or actions that are recommended.
 A0011184	**Forbidden** Indicates procedures, processes or actions that are forbidden.
 A0011193	**Tip** Indicates additional information.

Function and System Design

System Design

NMS7 is an intelligent tank gauge for measuring liquid levels with high precision, and employing the latest microprocessor technology. In addition to gauging level, NMS7 can measure the interfaces between up to three liquids, specific gravity of each and discern tank bottom. To enable accurate volume calculation or simple indication, NMS7 will accept input from either an average temperature probe NMT 53x series (via twisted pair cables, HART protocol) or spot temperature element (via 3 wire Pt. 100 RTD signal). Once installed, all calibration and operating functions can be done via the user friendly Matrix program and touch sensitive keypad. Tank side monitoring and operation can be performed by the Promonitor NRF 560.

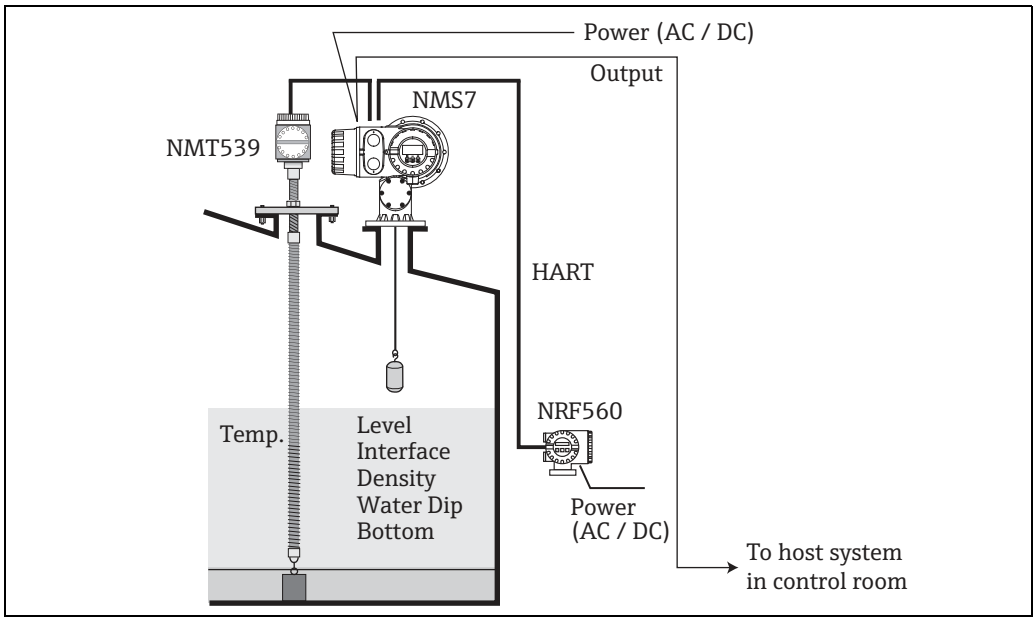

Figure 1: Measuring System

System Configuration

- From single tank level measurement to many tanks in large factory, NMS7 can be essential of product storage management facilities solutions. A wide variety of data output protocols are available for seamless integration into many commonly used systems.
- A primary example is Endress+Hauser's revolutionary Tankvision., A scalable concept, offering local tank management for up to 225 tanks via Modbus, V1 or Whessomatic 550 protocols. Accumulated data is available to DCS and other plant management systems via a Host Link.
- Output protocols
  - Modbus, RS485 or current loop
  - V1 serial pulse
  - Whessomatic 550
  - local HART
  - Mark/Space
  - Enraf BPM

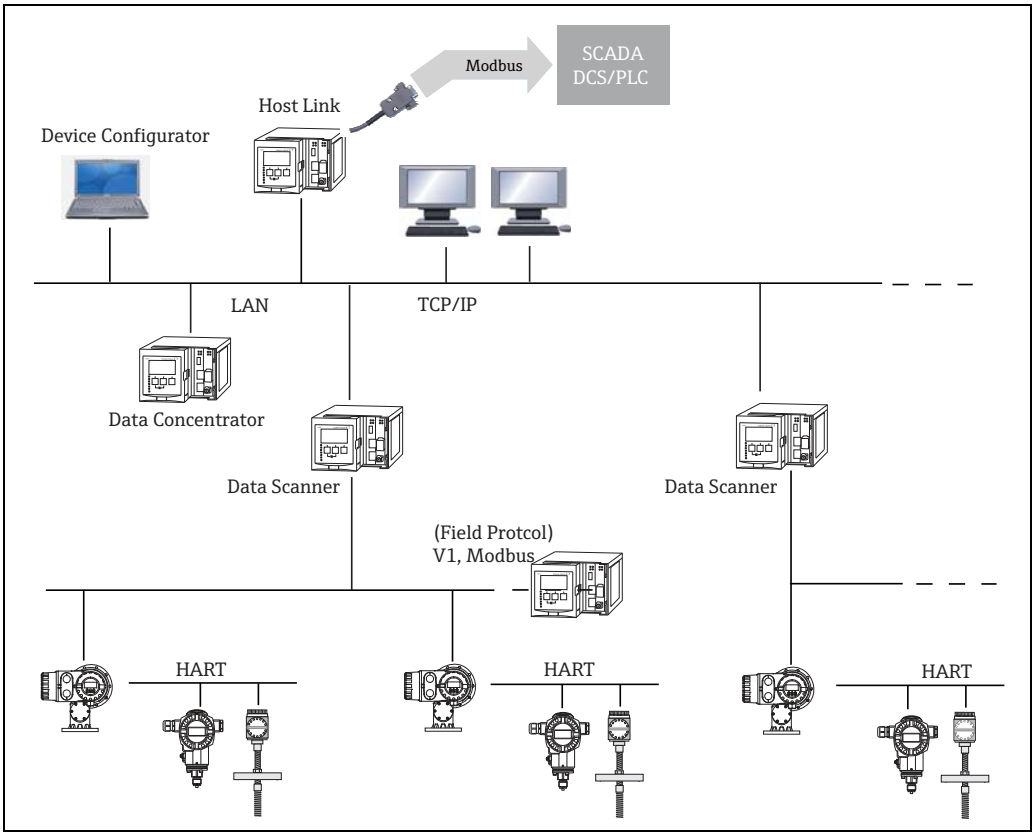

Figure 2: NMS7 system configuration Serial pulse output

Major Application

The number of measuring functions and output options as well as the lightweight compact design enables NMS7 to be installed in a wide range of applications at minimal cost.

Utilizing the merits of NMS7 which is in compliance with the liquor tax act, NMS7 can accurately manage application storage. NMS7 can be operated remotely and automatically operated by use of CIP nozzle control function. NMS7 can be used for direct operation of tank in a process of adding water to alcoholic beverages.

Operating Principle

NMS7 tank gauging system is based on the principle of gauging displacement.

A small displacer is accurately positioned in a liquid medium using a servo motor. The displacer is then suspended on a measuring wire which is wound onto a finely grooved drum housing. NMS7NMS7 counts the rotation of the wire drum and calculates the traveling distance of the wire and then obtain the liquid level change.

The drum is driven via coupling magnets which are completely separated by the drum housing. Outer magnets are connected to the wire drum whilst inner magnets are connected to the drive motor. As the inner magnets turn, their magnetic attraction causes the outer magnets to turn, as well, causing the entire drum assembly to turn. The weight of the displacer on the wire creates torque on the outer magnets generating change of magnetic flux. These changes generated in the drum assembly are detected by a unique electromagnetic transducer on the inner magnets. The drive motor is actuated to balance the voltage generated by variations of magnetic flux to equal the reference voltage defined by operating commands.

When the displacer is lowered and touches a liquid, the weight of the displacer is reduced by liquid buoyancy force. As a result, torque in the magnetic coupling changes, which is measured by 5 sets of Hall sensors, (patented) chips which are temperature compensated. A signal, indicating the position of the displacer, is sent to the motor control circuit. As the liquid levels rise and fall, the displacer position is adjusted by the drive motor. The rotation of the wire drum is precisely evaluated to determine level value.

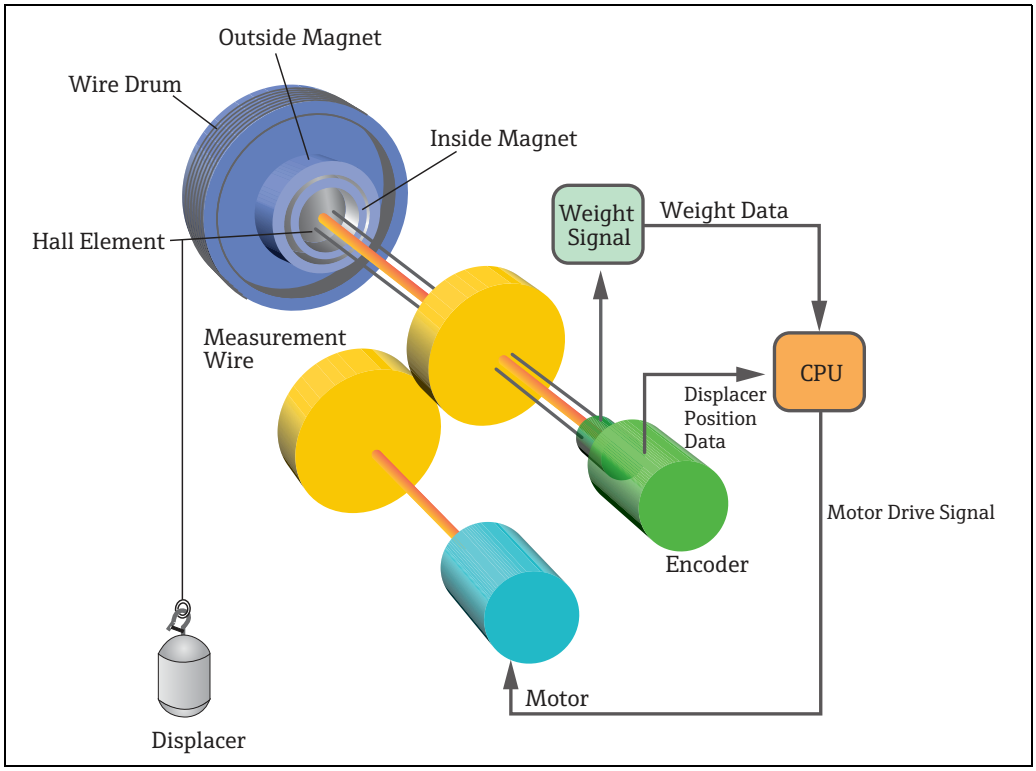

Figure 3: Direct Torque Detection

Typical Tank Installation

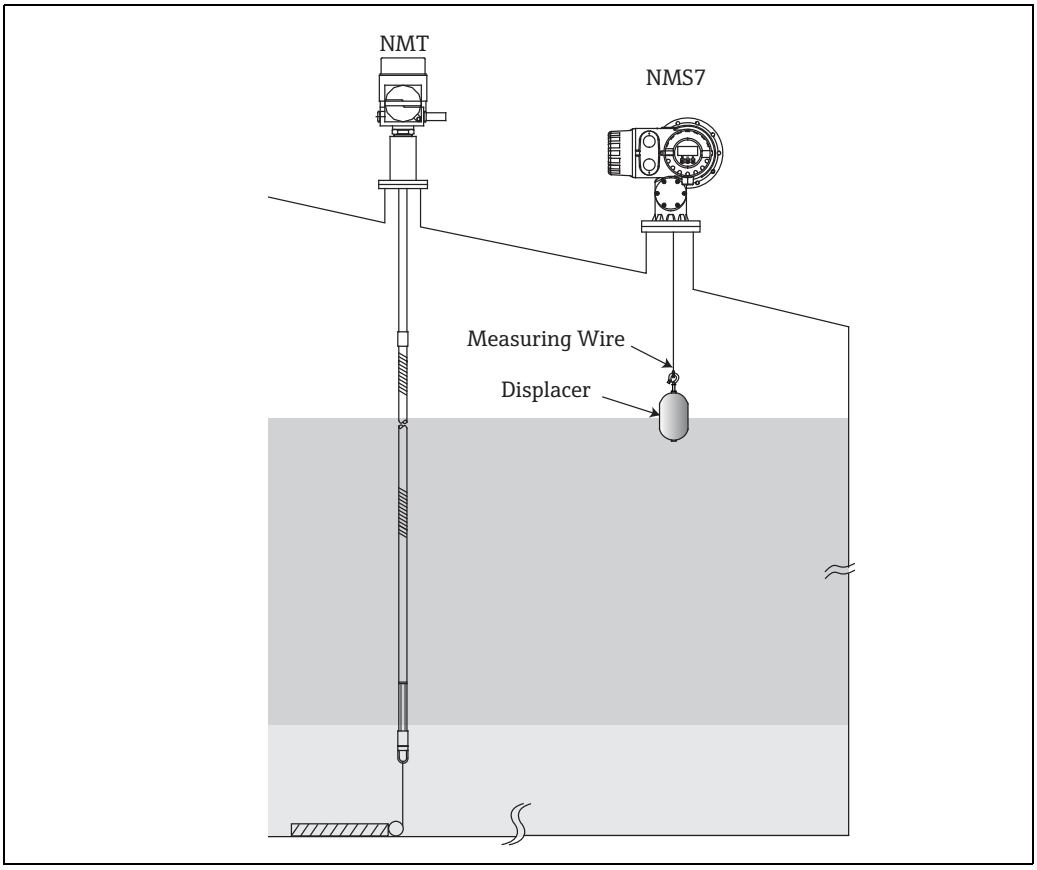

Figure 4: Fixed Roof Tank

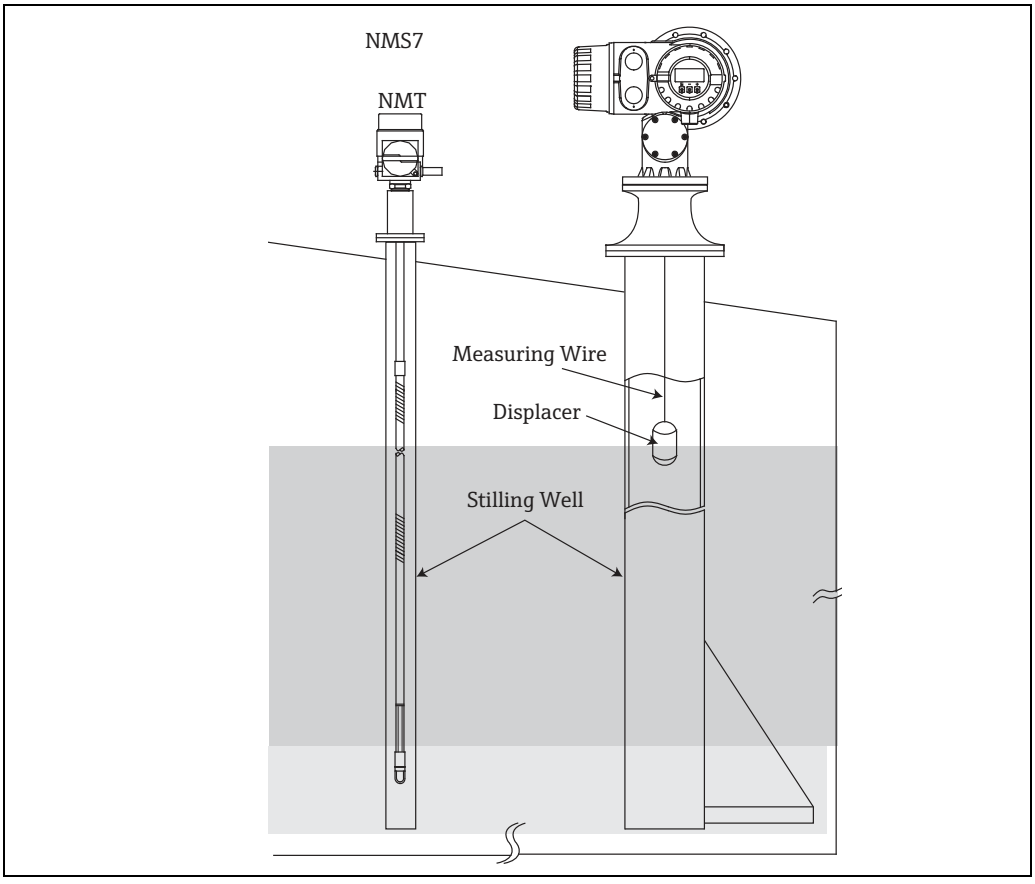

Figure 5: Floating Roof Tank

Measurement Terminology

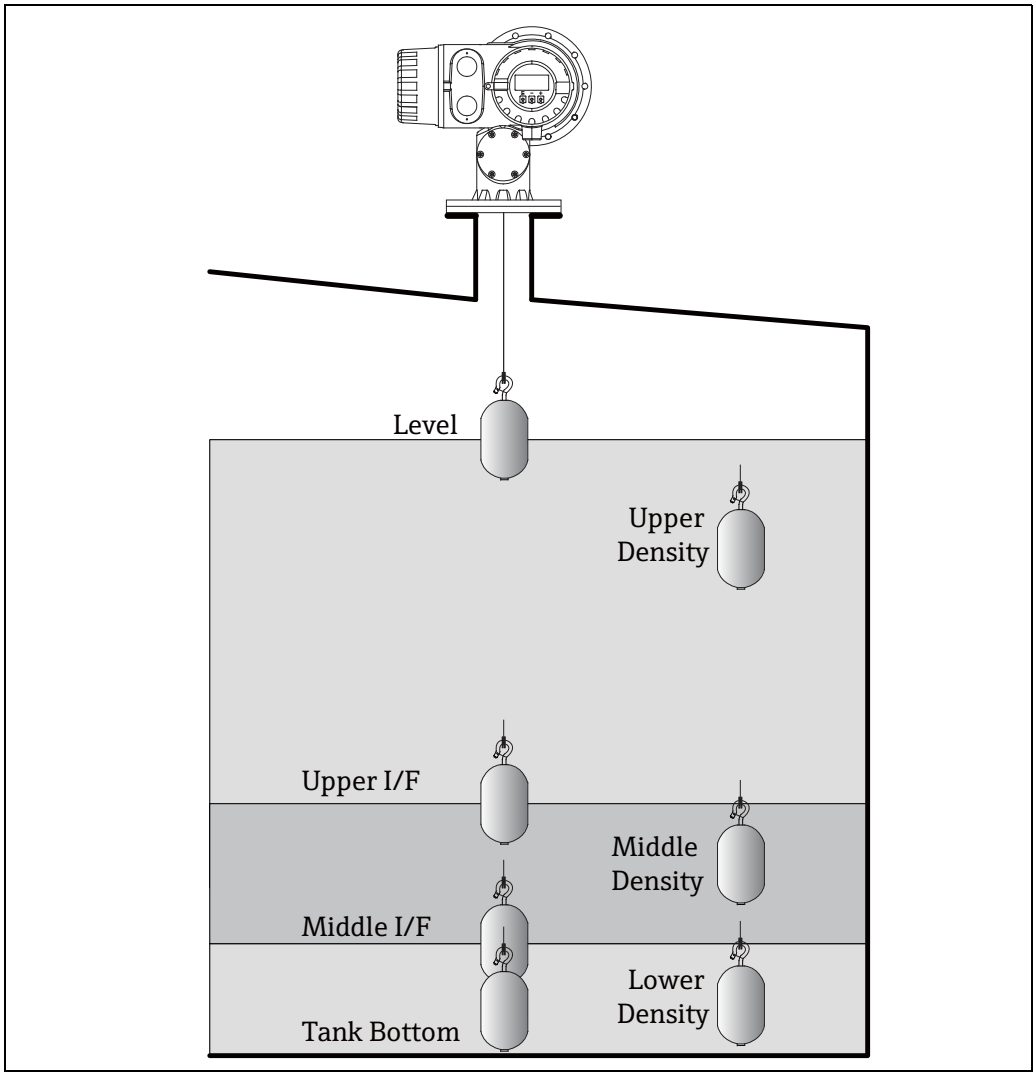

Figure 6: NMS7 with standard level, I/F x 2, Tank bottom and spot density x 3 measurement

Application Selection

Displacer Selection Guide

A wide variety of displacers are available to meet your applications. Proper displacer selection ensures optimal performance and longevity.

Displacer Types

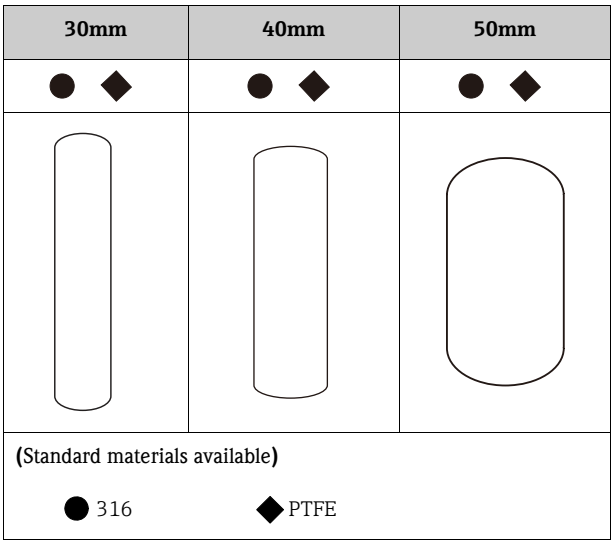

Confirmation Point

Application:
What will be the primary measurement function in your application? Most applications can be generalized into three classifications: level data, density data, or both. NMS7 is primarily a highly accurate level measurement gauging instrument, with the added ability to measure density. Level is derived by determining fluid surface level, interface level(s) between different liquids, as well as finding tank floor or datum plate.

Surface Level:
Larger diameter displacers generally have better accuracy under similar conditions.

Interface Level(s):
Cylindrical-shaped displacer, with rounded top and bottom, reduces resistance while moving through liquid. Thus, it provides smooth movement and fast interface measurement.

⚠ CAUTION

Note that in order for a displacer to travel down through liquid, displacer density (its weight divided by its volume) must be larger than liquid density.

Tank-bottom/Datum Plate Level:
Same as for interface level

Density:
Since the density is the calculated result of two of more measurements, a displacer with higher volume will usually yield the most accurate density measurement. In most cases we recommend our 50mm diameter displacer for density measurement.

Level and Density:
When an application calls for equal importance placed on measuring both level and density, the 50mm diameter, cylindrical displacer will give the best all-around performance.

Material Compatibility

What are the liquid(s) characteristics of your application? Displacers are available in two different standard materials. Material compatibility should be confirmed to ensure safe operation and optimal NMS7 performance.

SUS316:
Stainless steel is one of the most appropriate materials for food and beverage storage and is widely used in the industry.

PTFE:
One of the most well-known and versatile polymer materials, this high-performance material has one of the lowest friction coefficients. It provides excellent performance in viscous/sticky liquids, and also has excellent chemical resistance to a wide range of corrosives

Process Connection Size

The process connection defines the tank process entry, and may affect displacer size. The standard NMS7 process connections start at 80A (3B) and fit most tank gauging applications. Accordingly, most applications can be covered with 50mm displacer. Smaller diameter displacers are available when the process connection is smaller.

Input and Output

Input for Local Devices

Signal	Local HART protocol max. 4 devices
Power Supply	DC 24V
Additional Units	NMT 53x average temperature sensor NRF 560 field data processor Other - compatible HART devices Spot temperature Pt 100 Ohm ISO standard three wire connection

Output Parameters Based on Communication Protocol

	V1(new)	V1 (old)	MODBUS	HART	WM550	ENRAF	M/S
Level	Yes	Yes	Yes	Yes	Yes	Yes	Yes
Temperature (Product)	Yes	Yes	Yes	Yes	Yes	Yes	Yes
Vapor Temperature	Yes	-	Yes	Yes	Yes	-	-
Upper I/F (Water Level) *1	Yes	-	Yes	Yes	Yes	Yes	-
Middle I/F	Yes	-	Yes	Yes	-	-	-
Upper Density *2	Yes	-	Yes	Yes	Yes	-	-
Middle Densuty*3	Yes	-	Yes	Yes		-	-
Lower Density*4	Yes	-	Yes	Yes		-	-
Multi-Element Temperature	Yes	-	Yes	Yes	Yes	--	-
HART Device Input (Device 1)	Yes	-	Yes	Yes	Yes	-	-
HART Device Input (Device 2)	Yes	-	Yes	Yes	Yes	-	-
Alarm Data	Yes	Yes	Yes	Yes	Yes	Yes	-
Protocol Documentation	-	-	KA0002N	-	KA001N	-	-

⚠ CAUTION

*1 Upper I/F output value can be either selected from the Proservo's own displacer measurement or Water Bottom measured value via the Prothermo NMT 539.

*2 A single point density measurement within the upper layer liquid in the tank. The measurement position is configured to 150mm below the liquid surface at default.

*3 A single point density measurement within the middle layer liquid in the tank. The measurement position is configured to 150mm below the upper interface level at default.

*4 A single point density measurement within the lower layer liquid in the tank. The measurement position is configured to 150mm below the middle interface at default

RS485 Modbus

Module Name	Commdule RS 485 communication module (2008), COM - 5 (from 2009)
Number of Units	Maximum 10 instruments per loop
Baud Rate	1,200/ 2,400/ 4,800/ 9,600/ 19,200 bps/sec., selectable
Parity	Odd, even, none, selectable
Cable	Two wire twisted cable with screening (DGND is connected to the ground cable)
Topology	Serial bus, electrically isolated, tree structure
Transmission Distance	Maximum 1,200 m including limbs or branches (negligible with branches under 3 m)
Instrument Address	Accessed via touch control
Isolation	Bus inputs are electrically isolated from the other electronics

Bidirectional Serial Pulse (V1 Protocol)

Module Name	COM - 1
Number of Units	Maximum 10 instruments per loop
Baud Rate	3,300 bps
Cable	Two wire (twisted pair) unscreened cable
Topology	Serial bus, tree structure
Transmission Distance	Maximum 6,000 m
Instrument Address	Accessed via touch control
Isolation	Serial communication circuit isolated from other circuits

HART Protocol

Module Name	Commdule HART (2009), COM - 6 (from 2009)
Number of Units	Maximum 15 instruments per loop
Baud Rate	1,200 bps
Cable	Two wire, twisted pair screened cable Minimum core ϕ 0.15 (24AWG)
Transmission Distance	Maximum 1,200 m
Instrument Address	Accessed via touch control
Isolation	Bus input are electrically isolated from the other electronics

Whessoematic 550

Module Name	WM550 communication module
Number of Units	15 instruments per loop (connected to RTU)
Baud Rate	1,200 / 2,400 bps/sec.
Cable	Two wire, twisted cable with screening
Topology	20 mA current loop
Transmission Distance	Depending on specifications (contact E+H Japan.)
Instrument Address	Setting by DIP switches on communication board
Isolation	Current loop circuit isolated from other circuits

Mark/Space

Module Name	Mark/Space communication module
Number of Units	10 units per 1 loop are recommended.
Baud Rate	1,200 / 2,400 / 4,800 / 9,600 / 19,200 bps/sec.
Cable	Four wire
Topology	Serial bus, tree structure
Transmission Distance	Depending on specifications (contact E+H Japan.)
Instrument Address	Setting by DIP switches on communication board
Isolation	Serial pulse isolated from other circuits

Enraf Bi Phase Mark (BPM)

Module Name	COM - 3
Number of Units	Maximum 10 instruments per loop
Baud Rate	1,200, 2,400 bps/sec., selectable
Cable	Two wire, twisted cable with screening
Topology	Serial bus, electrically isolated, tree structure
Transmission Distance	Maximum 10 km
Instrument Address	Accessed via touch control
Isolation	Serial communication circuit isolated from other circuits

Analogue Output

Module Name	I/O - 5
Output	4 to 20 mA, active, two channels freely assignable value
On Alarm	Switchable Max. 22mA, Min. 2mA or hold last measured value
Electrical Isolation	Analogue output isolated from other circuits
Maximum Load	500 ohm
Conversion Accuracy	+/-0.3%

Relay

<table>
<tr><td>Module Name</td><td colspan="3">I/O - 3</td></tr>
<tr><td>Alarm Output, Standard
(Order Code Position 040= 1,3 or 5)</td><td colspan="3">non-voltage machine contact point, SPST 4 points, freely assignable to temperature</td></tr>
<tr><td>Hysteresis, Alarm Output</td><td colspan="3">Switch points and switching hysteresis freely adjustable, residual current fail-safe mode: minimum or maximum, selectable</td></tr>
<tr><td rowspan="6">Operation Output Logic</td><td></td><td colspan="2">Relay Condition</td></tr>
<tr><td>Initial Configuration
(Normal Status)</td><td>Open</td><td>Closed</td></tr>
<tr><td>On alarm</td><td>Closed</td><td>Open</td></tr>
<tr><td>On device error</td><td>Closed</td><td>Open</td></tr>
<tr><td>On abnormal power supply
(5% lower than, higher than specified power supply</td><td>Custody Transfer Closed</td><td>Custody Transfer Open</td></tr>
<tr><td>Power outage</td><td colspan="2">Hold last condition</td></tr>
<tr><td>Switching Capacity, Alarm Output</td><td colspan="3">▪ Max. 250VAC, 2A/62.5W
▪ Max. 220VDC, 2A/60W
▪ TIIS: 250VAC, 1.5A/30VDC, 9W</td></tr>
</table>

Alarm Output, Overspill Prevention (Order Code Position 040=4)	Non-voltage machine contact point, SPST 2points, freely assignable to measured level	
Hysteresis, Alarm Output	▪ Switch points and switching hysteresis are freely adjustable. ▪ Non-Voltage contact point: 2 points	
Operation Output Logic	Relay Condition	
	Initial Configuration (Normal Status)	Closed
	On alarm	Open
	On device error	Open
	On abnormal power supply (5% lower than, higher than specified power supply	Open
	Power outage	Open
Switching Capacity	▪ Umax. 200VDC/200VppAC ▪ Imax. 0.5AC, DC or peak AC ▪ Pmax. 15W/VA	

Operation Input	2 photocouplers, for external input from controller (tumbler switch, DCS, etc.)		
Operation Input Logic	Gauge Status	CTR1	CTR2
	Level	0 (OFF)	0 (OFF)
	UP	1 (ON)	0 (OFF)
	STOP	0 (OFF)	1 (ON)
	Interface Level	1 (ON)	1 (ON)
Input Voltage	15VDC, active circuit (supplied by NMS7)		
Input Current	Approximately 5mA		

Wiring for Primary Input and Output

V1 Serial Pulse
Modbus RS 485
HART Enraf BPM

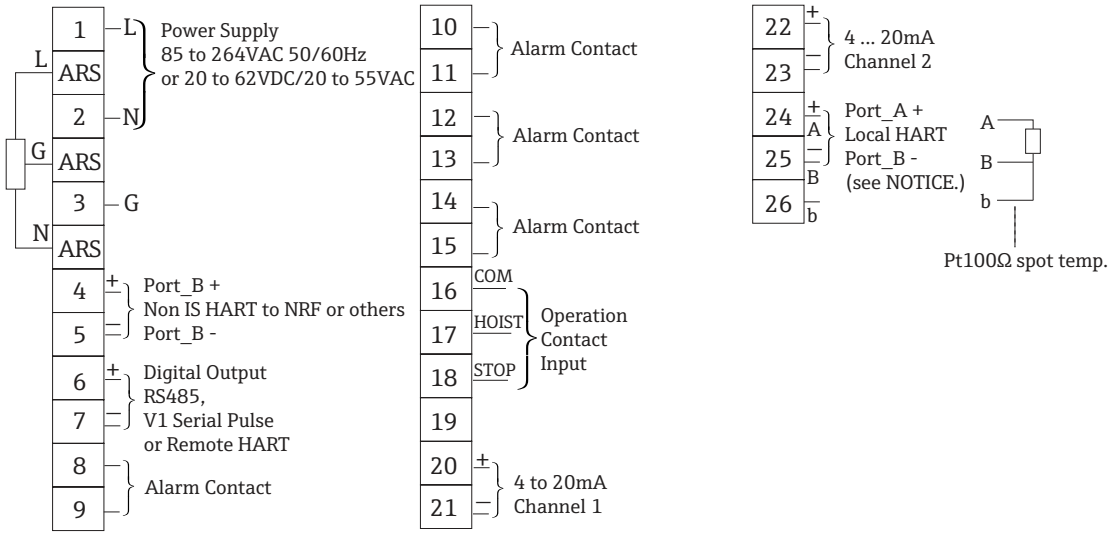

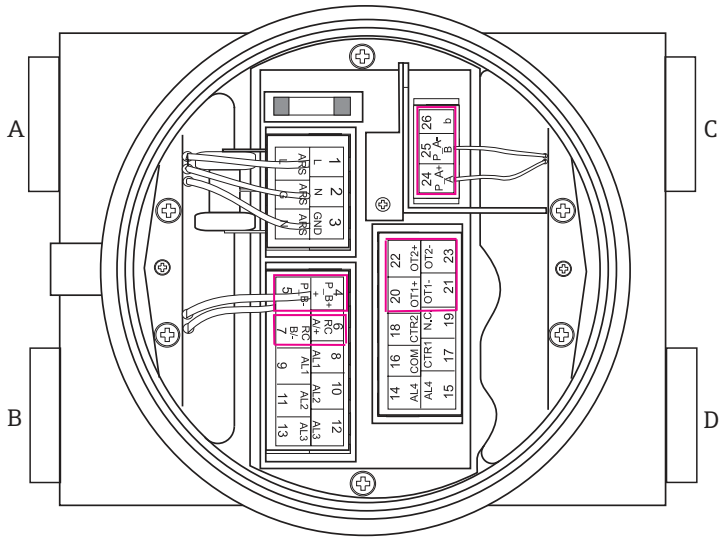

NOTICE

Cable Entry Descriptions	
A	Power Supply
B	Ex d local (slave) HART Terminals: 4 &5 Digital Output: Terminals 6 & 7 V1 Serial Pulse, Modbus (RS485) HART, Enraf BPM
C	Ex d local (slave) HART, or Pt100 3 wire spot RTD Terminals: 24 & 25
D	4 to 20mA Output: Terminals 20 & 21, 22 & 23 ⚠ CAUTION Terminals 22 & 23 will be used as “Status 1 Input” when signal input from field unit (Order code position 60) is: Order Information: 050 4: HART and Status 1 input 5: HART, Pt100 Spot and Status 1 input 6: HART, Pt100 Spot temp., Operation cntact, and Status 1 input

NOTICE

- Terminal connection for Whessoe Matic 550 (WM550) and Mark Space, refer to the next few pages.
- Terminals 4 & 5 and 24 & 25 for HART devices are inter - connected.

Figure 7: Wiring Sample 1

Whessoematic 550

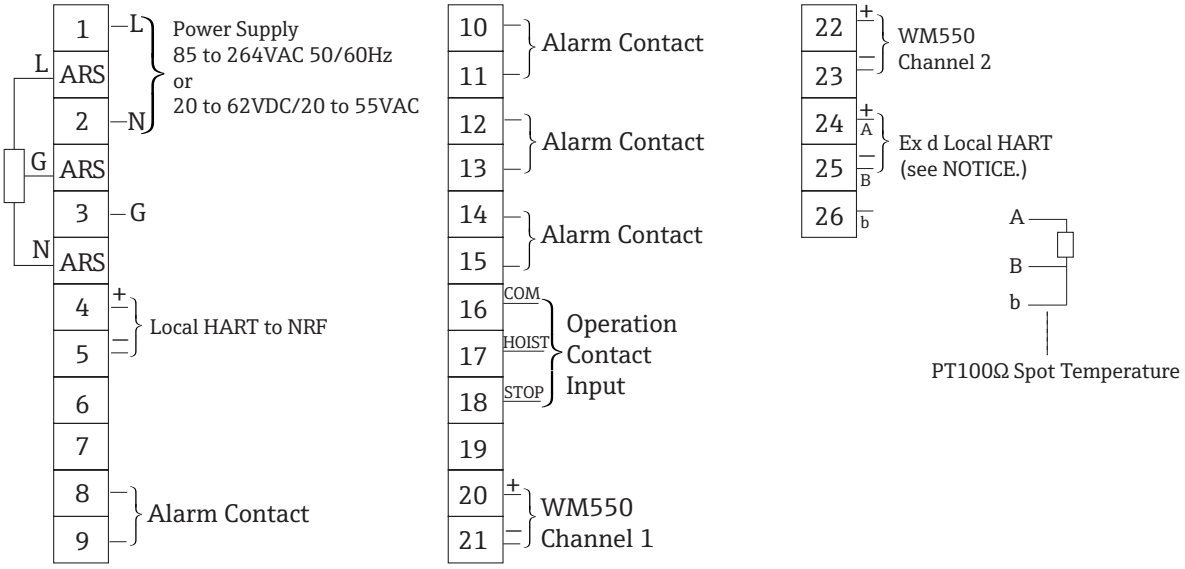

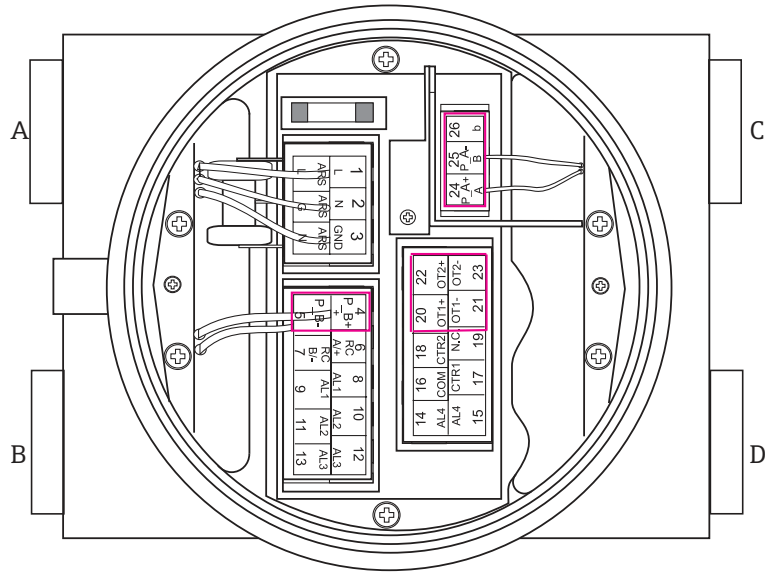

NOTICE

Cable Entry Descriptions	
A	Power Supply
B	Ex d local (slave) HART Terminals: 4 &5
C	Ex d local (slave) HART, or Pt100 3 wire spot RTD Terminals: 24 & 25
D	Whessoe Matic (WM)Output: Terminals 20 & 21, 22 & 23 WM550 is the current loop redundant data transmission protocol. Since these 4 terminals are used by WM550 terminal connection, 4 - 20mA output and status 1 input function are no longer available.

Normally WM550 and analog 4 to 20mA can not be connected.
Contact Endress+Hauser representatives if needed.

NOTICE

- Terminals 4 & 5 and 24 & 25 for HART devices are inter - connected.

Figure 8: Wiring Sample 2

Mark/Space

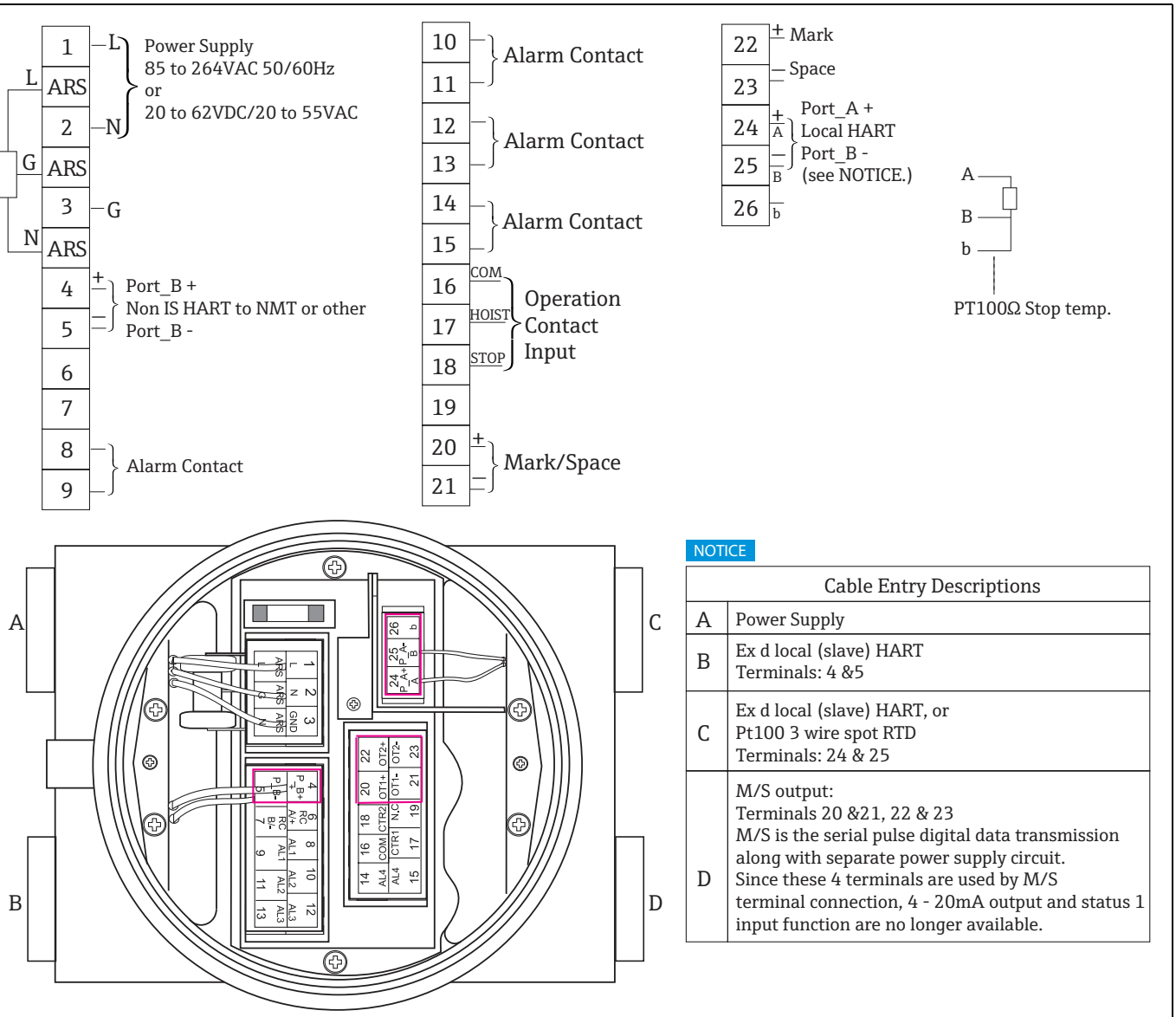

Cable Entry Descriptions	
A	Power Supply
B	Ex d local (slave) HART Terminals: 4 &5
C	Ex d local (slave) HART, or Pt100 3 wire spot RTD Terminals: 24 & 25
D	M/S output: Terminals 20 &21, 22 & 23 M/S is the serial pulse digital data transmission along with separate power supply circuit. Since these 4 terminals are used by M/S terminal connection, 4 - 20mA output and status 1 input function are no longer available.

NOTICE

Normally M/S and analog 4 to 20mA can not be connected.
Contact Endress+Hauser representatives if needed.

NOTICE

- Terminals 4 & 5 and 24 & 25 for HART devices are inter - connected.

Figure 9: Wiring Sample 3

Cable Entry	Thread: G1/2, 3/4 NPT1/2,3/4 M20, 25
Overvoltage Protection	NMS7 has internal surge arrester which complies with EN/IEC 61000-4-5 (Line to Line 1.0kV, Line to ground 2.0kV) Connect the metallic housing of the NMS7 to the tank wall or screen directly with an electrically conductive lead to ensure reliable potential matching.
Supply Voltage	High voltage type: 85 to 264 VAC, 50/60 Hz Low voltage type: 20 to 62 VDC / 20 to 55 VAC 50/60Hz ⚠ WARNING Allowable voltage supply is specifically stated depending on each Ex approval. Refer to the designated certification
Power Consumption	Maximum 50 VA, 50W
Safe Electrical Isolation	Between power supply and signal output, CPU, RS485, relay and other electronics

Performance Characteristics

Maximum Measured Error

Level	± 0.7mm (± 0.027 inch)*1
Interface	± 2.7 mm (± 0.106 inch)*2
Density	± 0.005 g/cm^3 *3
Sensitivity	± 0.1 mm (± 0.004 inch)
Motion delay timer	Configurable in 20mm steps from 0 to 9.9 seconds

*1 : Under reference conditions
*2 : Difference of product densities 0.1g/cm^3(6.25 lb/ft^3)
*3 : (optional) when calibrated and equipped for density measurement

Compensation

Displacer
Automatic compensation of displacer weight

Tank Wall
Compensation of depression and distortion

Operating Conditions: Environment

Bus Connection

Modbus (RS485 Output)

Termination Resistors
Set terminators as required in specific environments.

Bus Address
Each transmitter has an individual bus address configured in the software of the transmitter.

Bus Cabling
The bus cabling is galvanically isolated from the transmitter and the PC plug-in board or the interface adapter. The screening must be grounded and have electrical continuity throughout.

Bus Topology
When planning a system, attention should be paid to possible segmentation of the bus according to individual plant sections. Suitable topologies are:

- Tree of total length 1200 m

Sakura V1 Serial Pulse Output

The bus is connected to a RTU8, Tankvision or other Endress+Hauser V1- type receiver. The interface or receiver must be configured accordingly.

Termination Resistors
It is not necessary to set any termination resistors for serial pulse output.

Bus Address
Each transmitter on a signal loop has an individual bus address. This is defined within the transmitter software.

Bus Cabling
The bus cabling is electrically isolated from the transmitter and from the interface receiver.
Standard communication cable (non-shielded twisted pair cable) can be used for the data transmission.

Bus Topology
The suitable topologies for the serial pulse output
Maximum transmission distance: 600m (V1)
Make sure that the total length for one loop is set within 6000m in bus cabling.

Enraf Bi Phase Mark Output

The bus is connected to an Enraf I/F CIU or RTU8 to transmit measured value to upper host system as Entis (Enraf TG program) or Fuels Manager. These interface must be configured accordingly.

Termination Resistors
It is not necessary to set any termination resistors for serial pulse output.

Bus Address
Each transmitter on a signal loop has an individual bus address. This is defined within the transmitter software.

Bus Cabling
The bus cabling is electrically isolated from the transmitter and from the interface receiver. Standard communication cable can be used for the data transmission.

Bus Topology
The suitable topologies for Enraf BPM serial pulse output are:
Serial max. resistance: 400 ohm at 3 bus loops or less (10 transmitters per 1bus loop)
Serial max. capacitance: 1 micro F or less

Data Transmission & Operation
NMS7 is capable to transmit following sensory data as well as gauge operation command via Enraf BPM serial pulse output.

- Data: level, temperature, operation status
- Gauge command: STOP, UP, LEVEL, I/F

HART Output

The bus is connected to a HART master. The HART master must be configured accordingly.

Bus Address
Each transmitter on a signal loop has an individual bus address. This is defined within the transmitter software and / or auxiliary configuration environment such as host system or Field Communicator 375.

Bus Cabling
The bus cabling is galvanically isolated from the transmitter and the PC plug-in board or the interface adapter. The screening must be grounded and have electrical continuity throughout. EMC tests indicate the best result when the grounding at both ends and each transmitter is established. If there is a potential difference in between the grounds, measurement must be taken to equalize whilst observing a relevant hazardous area.

Bus Topology
The suitable topologies are:
Serial max. 1000 m
Tree of total length 1000 m.

Whessoematic 550 (WM 550) Output

The bus is normally connected to Whessoe 1098, RTU 8 or other upper host system via dual channel (can be single) WM550 current loop.

Termination Resistors
Admissible termination resistance should be calculated as follow.

- R = [Va - {n x (Vb + Vc)}] / 0.02
- R = terminal resistance in the system
- n = number of transmitter in the system
- Va = max. available voltage at receiver
- Vb = voltage drop across transmitter
- Vc = voltage drop across receiver

Bus Address
Each transmitter on a signal loop has an individual bus address. This is defined within the transmitter by mechanical dip switch on com board.

Bus Cabling
The bus cabling is galvanically isolated from the transmitter and the PC plug-in board or the interface adapter. BS5308 or equivalent 1.5mm^2 screened twisted pairs are recommended for bus cabling.

Bus Topology
The suitable topologies for the WM550 current output are depending on number of transmitter & cable quality on the loop. Recommended number of transmitter on single loop shall be less than 15 units to achieve the maximum performance.

Varec Mark Space (M/S) Output

The bus is normally connected to Interface Unit (IFU), Data acquisition Processor (DAP), RTU 8 or other upper host system via 4 wire M/S serial bus link.

Termination Resistors
Admissible termination resistance should be calculated as follow.

- R = (48 - 33) / {60mA + N (2.0mA)}
- R = terminal resistance in the system
- N = number of transmitter in the system
- 48 = supply voltage to receiver
- 33 = minimum M/S board operation voltage
- 60mA = required current for system operation
- 2.0mA = required current per transmitter

Bus Address
Each transmitter on a signal loop has an individual bus address. This is defined within the transmitter by mechanical dip switch on com board.

Bus Cabling
The bus cabling is galvanically isolated from the transmitter and the PC plug-in board or the interface adapter. The total length of field wiring shall be determined by calculation of maximum resistance within the system & required operation current. Once the total length is determined, distance has to be reduced by half because of current flow in both B+ & B- leads.

Bus Topology
The suitable topologies for the M/S serial pulse output are depending on number of transmitter & cable quality on the loop.

Ambient Temperature

-20 to +60°C (-4 to 140°F)

Storage Temperature

-40 to +60°C (-40 to 140°F)

Liquid Temperature

-200 to +200°C (-328 to +392°F)

Degree of Protection

IP 67, NEMA4x with closed housing and cable glands

Electromagnetic Compatibility (EMC)

Electromagnetic compatibility meets with EN 61326-1.

Operating Condition: Process

Process Pressure

- Stainless Drum Housing: 0 to 588kPa (Medium Pressure)

Measuring Range

Level

16m	Standard Option
22m	Standard Option
Longer ranges available upon request. Contact Endress+Hauser representatives.	

Density
0.430 to 2.000 g/cm^3

Mechanical Construction

Design and Dimensions

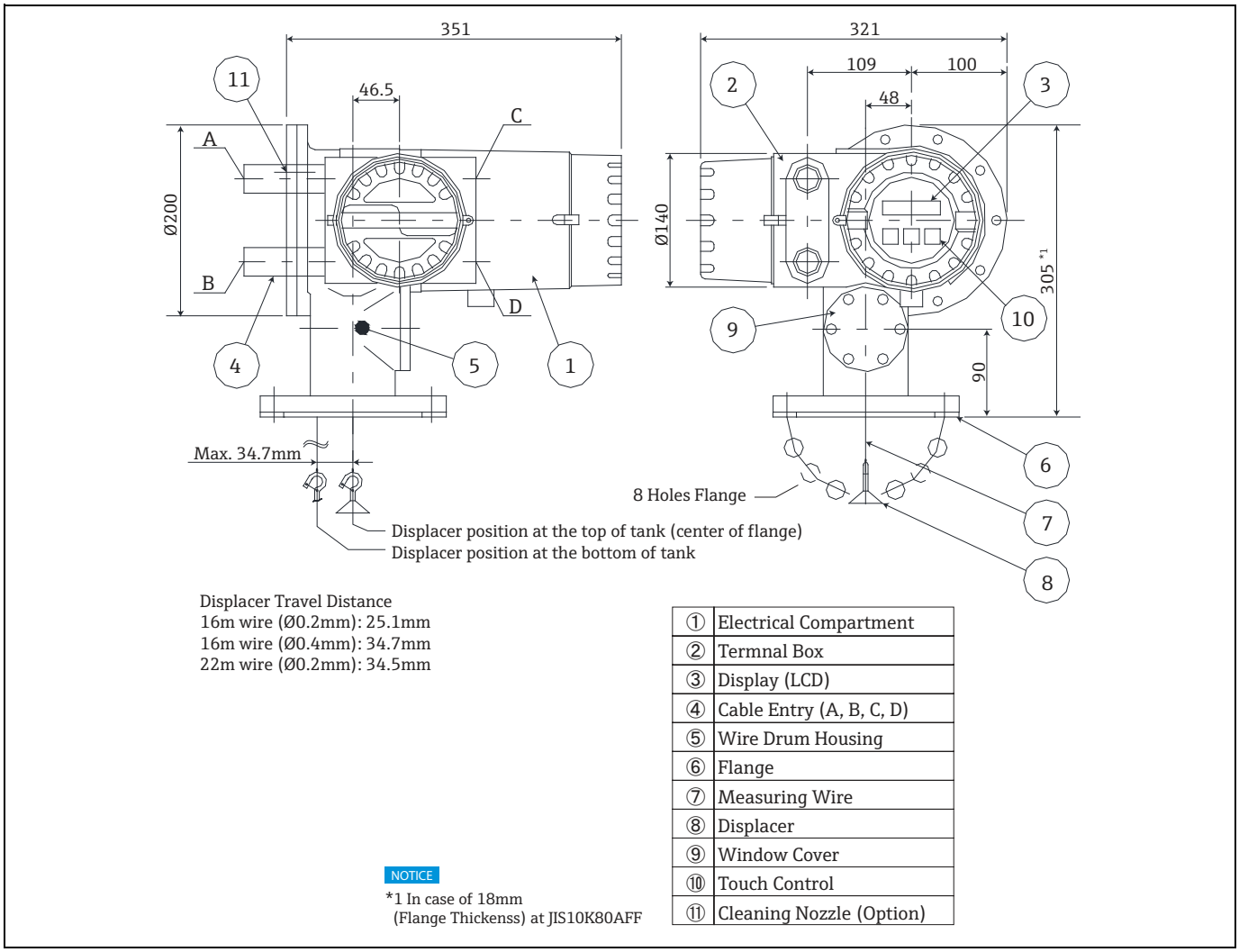

①	Electrical Compartment
②	Termnal Box
③	Display (LCD)
④	Cable Entry (A, B, C, D)
⑤	Wire Drum Housing
⑥	Flange
⑦	Measuring Wire
⑧	Displacer
⑨	Window Cover
⑩	Touch Control
⑪	Cleaning Nozzle (Option)

Figure 10: Dimensions of NMS7

Housing Materials of Construction	Electrical compartment: aluminum casting Drum chamber: stainless steel 316 casting
Weight	27kg (depending on specifications)
Flange Type	ASME, JIS, DIN 3" (80A) or equivalent. Refer to order code for full selection. Flange: stainless steel SUS304
Measuring Wire	Material (Standard) ▪ SUS316, 0.2 mm (max. 22m range) ▪ PTFE coating, SUS316, 0.4mm (max. 16m) ⚠ CAUTION When liquid level in a tank becomes turbulent condition, use a stilling well for installation.

Displacer

- Diameter: 50 mm (Standard), 30 and 40mm (option)
- Material (Standard): SUS316, polished
- Material (optional): PTFE (fluorine resin)
- Traveling speed: 0 to 2500 mm/min

Feature: 070	Measuring Range/Material/Diameter of Wire	Horizontal Movement Distance (mm/m) on Drum Wire
B	0 to 16m: SUS316L, 0.2mm	1.57
D	0 to 16m: PFA>SUS316, 0.4mm	2.17
E	0 to 22m: SUS316, 0.2mm	1.57

Cable Entry

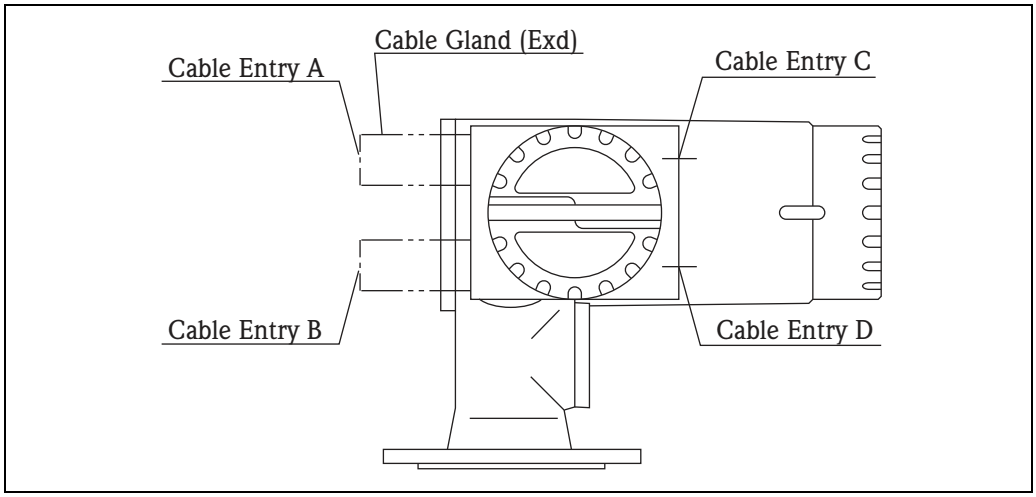

Figure 11: Cable Entries

WARNING

When ordering TIIS Ex d specification, cable glands are attached with NMS7. Ensure to use the cable glands.

Human Interface

Operating Concept

NMS7 is furnished with a four line illuminated liquid crystal display. With the E+H matrix driven operation, configuration is simple. Using only three keys, all parameters can be operated.

Sample:

- Operation - level; interface; spot & profile density, water dip, & tank bottom
- Current output
- Relay output
- Maintenance prediction
- Calibration, etc.

The display can be configured to be displayed in English, Japanese, or Chinese. Measurement unit and decimal point can be also configured within NMS matrix.

Operational Security
The programming information can be protected by software access codes that disable all programmable parameters or by a hardware switch to prevent changes from remote transmission or the touch control keypad. A self-diagnosis function checks for any operational failures.

Display (LCD)

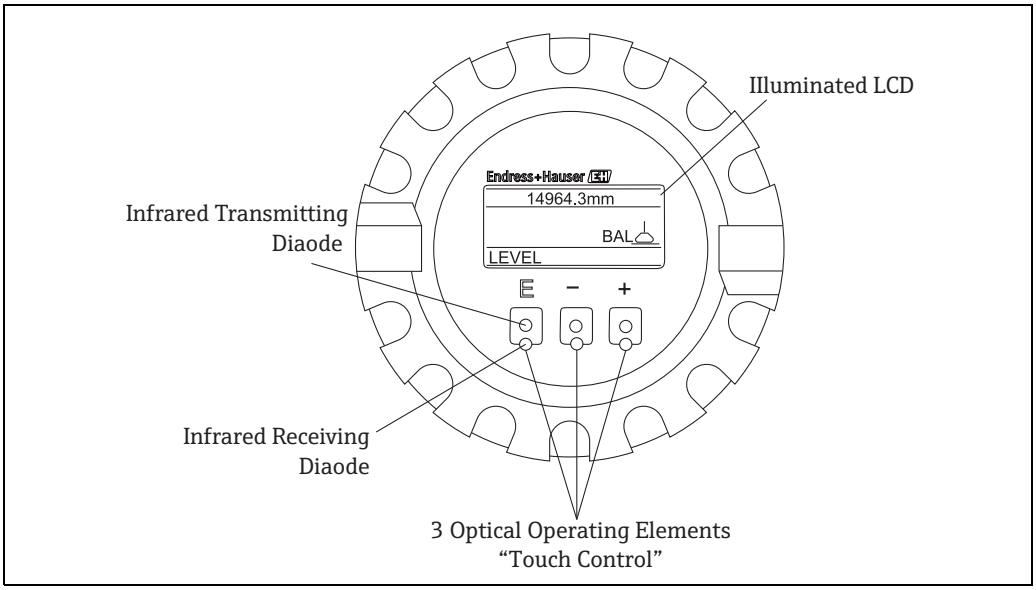

Figure 12: Display (LCD)

Four line 16-digit illuminated display English, Japanese, Chinese selectable

Programming

Three optical keys (touch control) for selection of matrix functions.

Memo Function

Memo of maintenance information.

Advanced Maintenance

Maintenance Prediction	NMS7 will provide advance warning of required maintenance such as replacement of worn wire etc. The operating life-span of electrical and mechanical parts of the NMS7 are factory set within the instruments memory. This information is checked involving with the built-in clock and compared and registered in the instrument.
Maintenance	The maintenance record can be accessed via the matrix and will provide information of alarm data (e.g. date, time, alarm type). A memo function allows the user or an E+H Service Engineer to enter maintenance data manually.
Proactive Safety	Proactive safety diagnostic function warns of mechanical failure, and outputs maximum level value, e.g. 99999 to local display and Fieldbus.

Certificates and Approval

CE Mark	By attaching the CE mark, Endress+Hauser confirms that the instruments pass the required tests.
Ex Approvals	TIIS Ex d IIB T4
Overspill Prevention	TÜV: Germany
SIL	TÜV: Germany
External Standards and Guidelines	EMC-Directive 89/336/EC PE-Directive 97/23/EC EN 10204-3.1B OIML-R85/1998 OIML-R85/2008 SIL IEC61508, IEC61511 ISO 9001:2008

Order Information

NMS7

010	**Approval:**	
	0	Weather proof, IP67 NEMA4X
	1	TIIS Ex d IIB T4
	9	Special version, TSP-no. to be spec.

020	**Application:**	
	A	Liquid level
	B	Liquid level, I/F level, density
	C	CIP liquid level
	D	CIP liquid level I/F level density
	Y	Special version, TSP-no. to be spec.

030	**Output 1:**	
	F	Not selected
	A	2-way 2-wire (V1 protocol)
	B	2-way 2-wire (BBB protocol)
	C	2-way 2-wire (MIC, RS232C protocol)
	D	2-way 2-wire (MIC protocol)
	J	2-way 2-wire (MDP protocol)
	G	HART active
	H	HART passive
	L	Whessmatic 550, overvoltage protection
	M	Mark Space
	N	Enraf BPM
	P	Modbus RS 485
	Y	Special version, TSP-no. to be spec.

040	**Output 2:**	
	0	Not selected
	1	4 x relay SPST
	2	2 x 4-20mA
	3	4 x relay SPST, 2 x 4 - 20mA
	4	2 x relay SPST, Overspill prevention
	5	4 x relay SPST, 1 x 4 - 20mA
	9	Special version, TSP-no. to be spec.

050	**Input:**	
	0	HART (NMT5xx, NRF560, pressure transmitter)
	1	1 x spot temperature Pt100, HART (NRF560, pressure transmitter)
	2	2 x operation contact, HART (NMT5xx, NRF560, pressure transmitter)
	3	1 x spot temperature Pt100, 2 x operation contact, HART (NMT5xx, NRF560, pressure transmitter)
	4	1 x status, HART (NMT5xx, NRF560, pressure transmitter)
	5	1 x spot temperature Pt100, 1 x status, HART (NMT5xx, NRF560, pressure transmitter)
	6	1x status, 1x spot temperature Pt100, 2x operation contact, HART (NRF560, pressure transmitter)
	9	Special version, TSP-no. to be spec.

060	**Measuring Range; wire:**	
	B	0-16m; SUS316, 0.2mm
	D	0-16m; PFA>SUS316, 0.4mm
	E	0-22m; SUS316, 0.2mm
	Y	Special version, TSP-no. to be spec.

070	**Cable Entry:**	
	A	4x thread G1/2
	B	4x thread G3/4
	C	4x thread NPT1/2
	D	4x thread NPT3/4
	G	4x thread M20
	H	4x thread M25
	Y	Special version, TSP-no. to be spec.

NMS7-	**Product designation (Continued on next page)**

080		**Process Connection:**
	A	10K 80A RF, SUS304 flange JIS B2220
	B	10K 80A FF, SUS304 flange JIS B2220
	C	NPS 3" Cl.150 RF, SUS304 flange ASME B16.5
	D	DN80 PN10 B1, SUS304 flange EN1092-1 (DIN2527 B)
	E	80A 150lbs RF, SUS304 flange JPI 7S-15
	Y	Special version, TSP-no. to be spec.

90		**Power Supply**
	0	85 - 264 VAC, 50/60 Hz
	1	20 - 62 VDC, 20 - 55 VAC, 50/60 Hz
	9	Special version, TSP-no. to be spec.

100		**Displacer:**
	A	Cylindrical 50mm, SUS316 polished
	B	Cylindrical 40mm, SUS316 polished
	C	Cylindrical 30mm, SUS316 polished
	D	Cylindrical 50mm, PTFE
	E	Cylindrical 40mm, PTFE
	F	Cylindrical 30mm, PTFE
	Y	Special version, TSP-no. to be spec.

110		**O-ring; chamber finishing:**
	0	NBR; milled
	1	Silicone rubber; polished
	2	FKM; milled
	5	Silicone rubber; FEP coated
	9	Special version, TSP-no. to be spec.

120		**Nozzle**
	A	Rc3/8, cleaning
	B	NPT3/8, cleaning
	C	G3/8, cleaning
	D	Rc3/8, gas purging
	E	NPT3/8, cleaning
	F	G3/8, gas purging
	G	Rc3/8, cleaning, gas purging
	H	NPT3/8, cleaning, gas purging
	J	G3/8, cleaning, gas purging
	K	G1/2, cleaning
	Y	Special version, TSP-no. to be spec.

130		**Additional Option:**
	A	Not selected
	B	Custody transfer seal, wire lock
	C	Cleaned from oil + grease
	D	Sunshade
	E	Cleaned from Oil + grease, custody transfer seal, wire lock
	F	Sunshade, custody transfer seal, wire lock
	G	Sunshade, cleaned from oil + grease
	H	Sunshade, cleaned from oil + grease, custody transfer seal, wire lock
	Y	Special version, TSP-no. to be spec.

NMS7-	**Complete product designation**

Accessories

Power + Control Switch

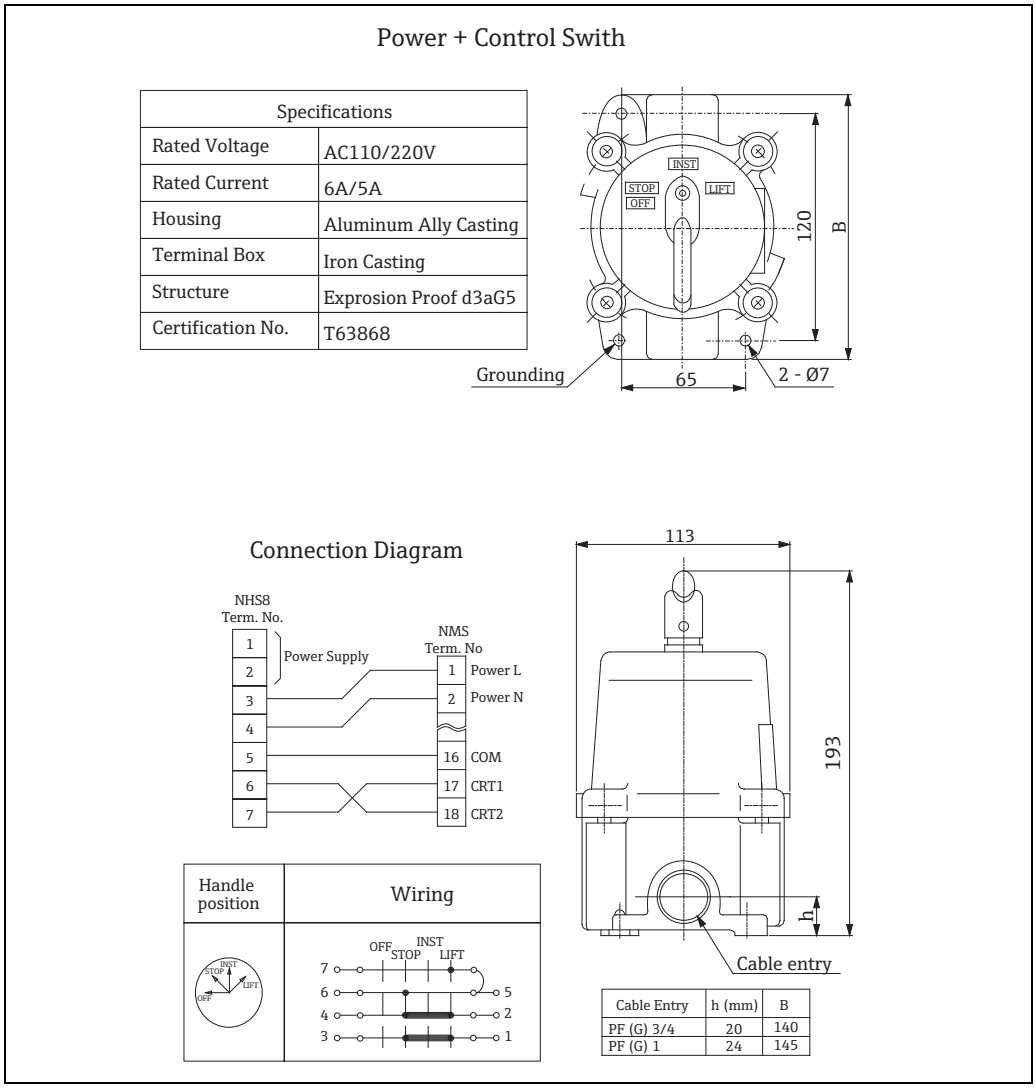

Figure 13: Power and Control Switch

Power & Control Switches are used for field mounted tank gauges. This provides additional gauge operation contact switching in order to control gauge's operation, such as hoisting up displacer.

NHS8

010	**Approval:**	
	1	Weather proof IP67
	2	Flame proof (JIS d3aG5)
020	**Cable entry:**	
	0	2 x thread G3/4
	1	2 x thread G1
	2	2 x thread NPT3/4
	3	2 x thread NPT1
	9	Special version, TSP-no. to be spec.
NHS8-		Complete product designation

Reducing Flange

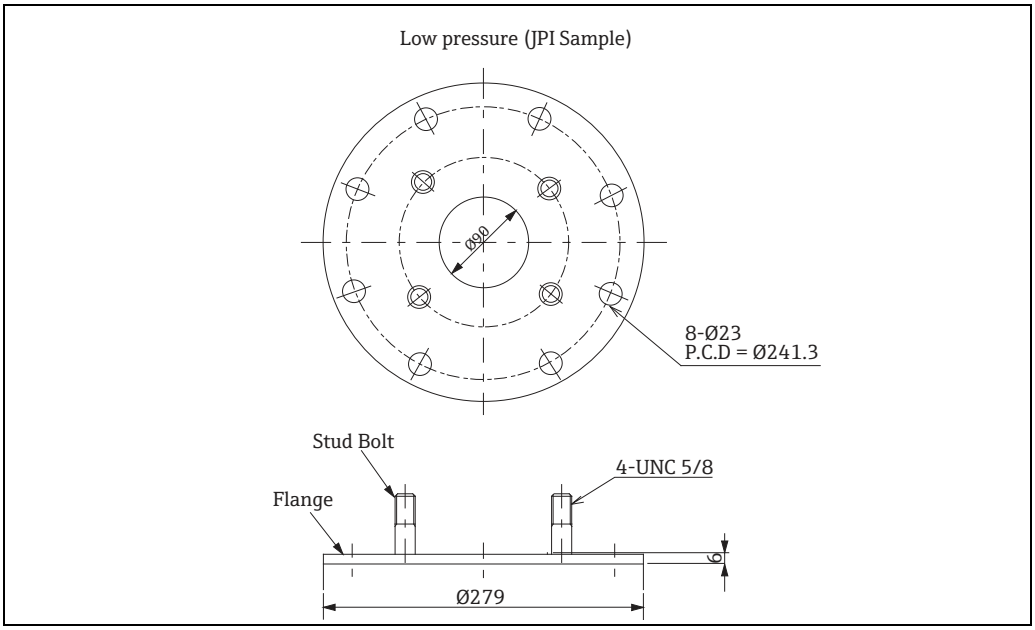

Figure 14: Reducing Flange

Use reducing flange when NMS7 connection 80A(30")and mounting nozzle is 150A(6").

NHF4

10	**Process Connection; Body:**		
	A		10K 150A RF, flange JIS B2220
	C		10K 150A FF, flange JIS B2220
	E		20K 150A RF, flange JIS B2220
	G		NPS 6" Cl.150 RF, flange ASME B16.5
	J		NPS 6" Cl.300 RF, flange ASME B16.5
	L		DIN 150 PN10 B1, flange EN1092 (DIN2527 B)
	N		DIN 150 PN25 B1, flange EN1092 (DIN2527 B)
	Q		150A 150lbs RF, flange JPI 7S-15
	S		150A 300lbs RF, flange JPI 7S-15F
	Y		Special version, TSP-no. to be spec.
20		**Flange Material:**	
		0	SS400
		1	SUS304
		9	Special version, TSP-no. to be spec.
NHF4-			Complete product designation

Supplementary Documentation

Technical Information	**TI00042G** Prothermo NMT 539 **TI00462G** Promonitor NRF 560
Operating Manual	**BA00401G** Proservo NMS7
Compact Instructions	**KA001N** Whessoemtric 550 **KA002N** RS485 Modbus
Functional Safety Manual	**SD00337G** Proservo NMS7 - (4-20mA Output, Overspill prevention)

www.addresses.endress.com

Endress+Hauser

People for Process Automation