Level | Pressure | Flow | Temperature | Liquid Analysis | Registration | Systems Components | Services | Solutions

Technical Information

iTEMP® HART® TMT142

Temperature transmitter for resistance thermometers, thermocouples, resistance transmitters and voltage transmitters, adjustable via HART®protocol



Application

- Temperature field transmitter with HART® protocol for converting various input signals to an analogue, scalable 4 to 20 mA output signal
- Universal input usable for:
  Resistance thermometer (RTD)
  Thermocouples (TC)
  Resistance transmitter (Ω)
  Voltage transmitter (mV)
- HART® protocol for operating the device on site using handheld terminal (DXR375) or remotely via the PC
- Optional: stainless steel housing for EEx d application
- Sensor monitoring:
  Failure conditioning, corrosion detection to NAMUR NE 89
- Failure conditioning in event of sensor break or sensor short-circuit, adjustable to NAMUR NE 43
- EMC to NAMUR NE 21, CE
- Approvals:
  ATEX (EEx ia, EEx d and dust ignition-proof), FM and CSA (IS, NI, XP and DIP)
- Galvanic isolation
- Output simulation
- Min./max. process value recorded

Your benefits

- Universally programmable with HART® protocol for various input signals
- Illuminated display, rotatable
- Operation, visualisation and maintenance with PC, e.g. using FieldCare or ReadWin® 2000 operating software
- Two-wire technology, analog output 4 to 20 mA
- Undervoltage detection
- Highly accurate in entire operating temperature range

TI00107R/09/en
71190515

Endress+Hauser
People for Process Automation

Function and system design

Measuring principle

Electronic recording, conversion and display of input signals in industrial temperature measurement.

Measuring system

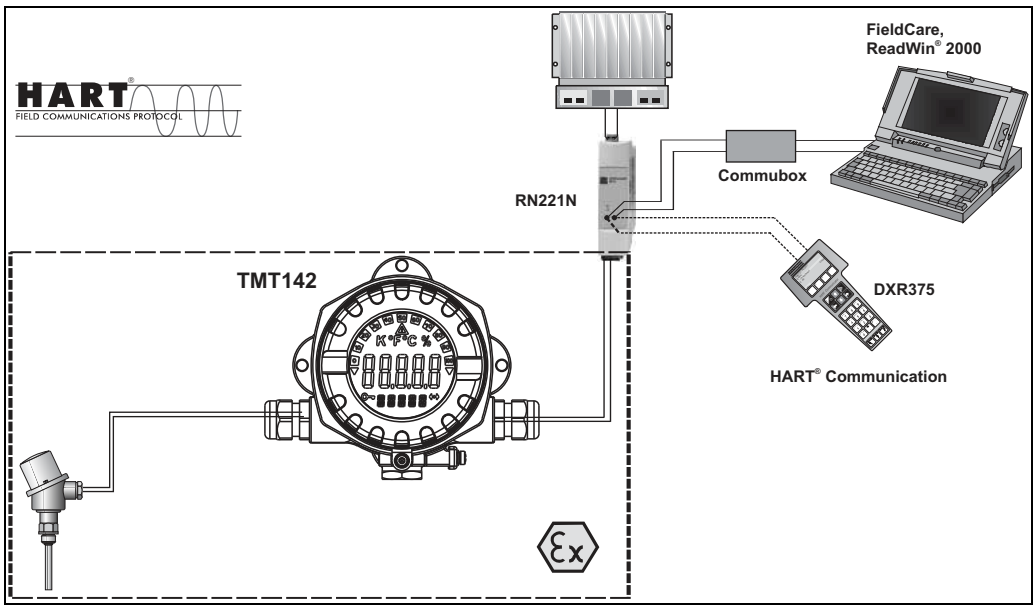

Example of an application of the field transmitter

The iTEMP® HART® temperature field transmitter TMT142 is a two-wire transmitter with an analogue output, an input for resistance thermometers and resistance transmitters in 2-wire, 3-wire or 4-wire connection, thermocouples and voltage transmitters. The LC display shows the current measured value digitally and as a bar graph with an indicator for limit value violation. The TMT142 can be operated via the HART® protocol using a handheld terminal (DXR375) or PC (FieldCare or ReadWin® 2000 operating software).

Corrosion detection

Sensor connection line corrosion can corrupt the measured value. For this reason, the device gives you the opportunity to detect corrosion for thermocouples and resistance thermometers with a 4-wire connection before measured value corruption takes place.

Input

Measured variable

Temperature (temperature linear transmission behaviour), resistance and voltage

Measuring range

The transmitter records different measuring ranges depending on the sensor connection and input signals (see 'Type of input').

Type of input

Input	Designation	Measuring range limits
Resistance thermometer (RTD) To IEC 60751 (α = 0.00385)	Pt100 Pt200 Pt500 Pt1000	-200 to 850 °C (-328 to 1562 °F) -200 to 850 °C (-328 to 1562 °F) -200 to 250 °C (-328 to 482 °F) -200 to 250 °C (-238 to 482 °F)
To JIS C1604-81 (α = 0.003916)	Pt100	-200 to 649 °C (-328 to 1200 °F)
To DIN 43760 (α = 0.006180)	Ni100 Ni1000	-60 to 250 °C (-76 to 482 °F) -60 to 150 °C (-76 to 302 °F)
To Edison Copper Winding No.15 (α = 0.004274)	Cu10	-100 to 260 °C (-148 to 500 °F)
To SAMA (α = 0.003923)	Pt100	-100 to 700 °C (-148 to 1292 °F)
To Edison Curve (α = 0.006720)	Ni120	-70 to 270 °C (-94 to 518 °F)
To GOST (α = 0.003911)	Pt50 Pt100	-200 to 1100 °C (-328 to 2012 °F) -200 to 850 °C (-328 to 1562 °F)
To GOST (α = 0.004280)	Cu50, Cu100	-200 to 200 °C (-328 to 392 °F)
	Polynomial RTD Pt100 (Callendar - van Dusen)	-200 to 850 °C (-328 to 1562 °F) -200 to 850 °C (-328 to 1562 °F)
	■ Type of connection: 2-wire, 3-wire or 4-wire connection ■ With 2-wire circuit, compensation of wire resistance possible (0 to 30 Ω) ■ With 3-wire and 4-wire connection, sensor wire resistance to max. 50 Ω per wire ■ Sensor current: ≤ 0.3 mA	
Resistance transmitter	Resistance Ω	10 to 400 Ω 10 to 2000 Ω
Thermocouples (TC) To NIST monograph 175, IEC 584	Type B (PtRh30-PtRh6)[1)] Type E (NiCr-CuNi) Type J (Fe-CuNi) Type K (NiCr-Ni) Type N (NiCrSi-NiSi) Type R (PtRh13-Pt) Type S (PtRh10-Pt) Type T (Cu-CuNi)	+40 to +1820 °C (+104 to 3308 °F) -270 to +1000 °C (-454 to 1832 °F) -210 to +1200 °C (-346 to 2192 °F) -270 to +1372 °C (-454 to 2501 °F) -270 to +1300 °C (-454 to 2372 °F) -50 to +1768 °C (-58 to 3214 °F) -50 to +1768 °C (-58 to 3214 °F) -260 to +400 °C (-436 to 752 °F)
to ASTM E988	Type C (W5Re-W26Re) Type D (W3Re-W25Re)	0 to +2315 °C (32 to 4199 °F) 0 to +2315 °C (32 to 4199 °F)
to DIN 43710	Type L (Fe-CuNi) Type U (Cu-CuNi)	-200 to +900 °C (-328 to 1652 °F) -200 to +600 °C (-328 to 1112 °F)
	■ Internal cold junction (Pt100) ■ External cold junction: configurable value -40 to +85 °C (-40 to +185 °F) ■ Max. sensor resistance 10 kΩ (if sensor resistance is greater than 10 kΩ, error message as per NAMUR NE 89)	
Voltage transmitter (mV)	Millivolt transmitter (mV)	-20 to 100 mV

1) Increasing inaccuracy for temperatures < 300 °C (< 572 °F)

Output

Output signal

Analog output	4 to 20 mA, 20 to 4 mA (can be inverted)
Signal encoding	FSK ± 0.5 mA via current signal
Data transmission rate	1200 baud
Galvanic isolation	U = 2 kV AC (input/output)

Failure information

Failure information as per NAMUE NE43:
Failure information is created if the measuring information is missing or not valid. A complete list of all the errors occurring in the measuring system is created.

Underranging	Linear drop from 4.0 to 3.8 mA
Overranging	Linear increase from 20.0 to 20.5 mA
Failure, e.g. sensor breakage; sensor short circuit	≤ 3.6 mA ("low) or ≥ 21.6 mA ("high"), can be selected The "high" alarm setting can be set between 21.6 mA and 23 mA, thus providing the flexibility needed to meet the requirements of various control systems.

Load (HART®)

$R_{b\ max.} = (U_{b\ max.} - 11\ V) / 0.023\ A$ (current output)

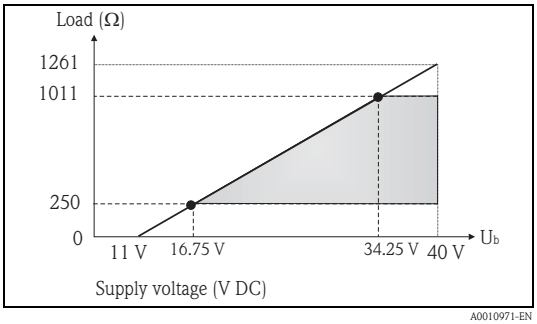

A0010971-EN

Linearisation/transmission behaviour

Temperature linear, resistance linear, voltage linear

Filter

1st order digital filter: 0 to 60 s

Current consumption

- 3.6 to 23 mA
- Minimum current consumption ≤ 3.5 mA
- Current limit ≤ 23 mA

Protocol-specific data

HART® Version	5
Write protection	Hardware setting for activating write protection
Device description files (DD)	Information and files are available free of charge at: www.endress.com www.hartcomm.org
Load (communication resistor)	min. 250 Ω

Switch-on delay

4 s (during switch-on operation $I_a \leq 4$ mA)

Power supply

Electrical connection

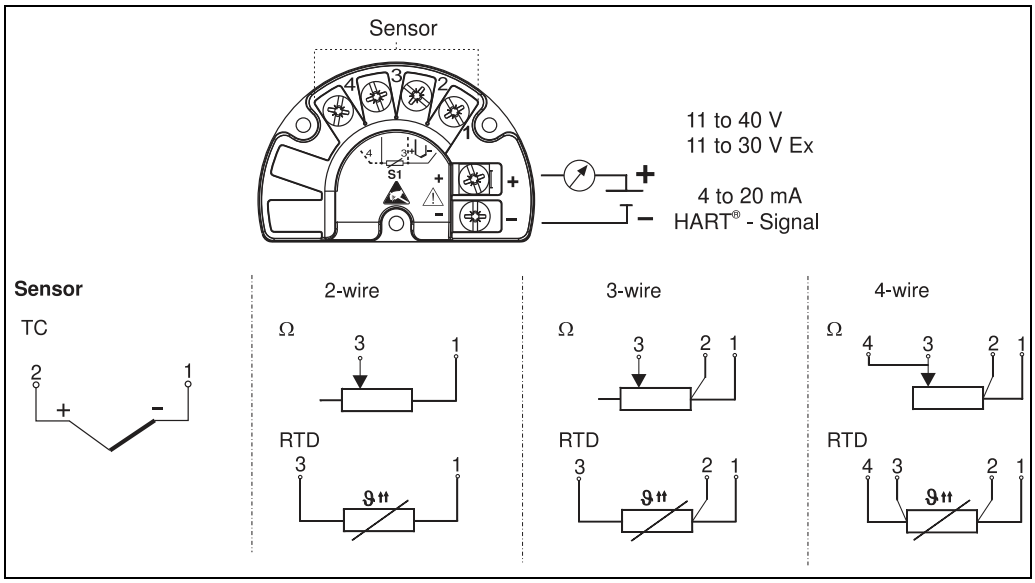

Supply voltage

U_b= 11 to 40 V (8 to 40 V without display), reverse polarity protection

Power must be fed to the device from an 11 to 40 VDC power supply in accordance with NEC Class 02 (low voltage/current) with short-circuit power limit to 8 A/150 VA.

Cable entry

Version	Type
Thread	3x thread NPT½"
	3x thread M20x1,5
	3x thread G½"
	1x thread M24x1.5 and 2x M20x1.5
Cable gland	2x cable gland M20x1.5

Residual ripple

Perm. residual ripple $U_{ss} \leq 3$ V at $U_b \geq 13.5$ V, $f_{max.} = 1$ kHz

Accuracy

Response time

1 s

Reference operating conditions

- Calibration temperature: +25 °C ± 5 K; (+77 °F ± 9 °F)
- Supply voltage: 24 V DC
- 4-wire circuit for resistance adjustment

Maximum measured error

	Designation	Accuracy		
		Digital		D/A[1]
Resistance thermometer (RTD)	Cu100, Pt100, Ni100, Ni120 Pt500 Cu50, Pt50, Pt1000, Ni1000 Cu10, Pt200	0.2 K (0.36 °F) 0.6 K (1.08 °F) 0.4 K (0.72 °F) 2 K (3.6 °F)	0.1 K (0.18 °F)[2] 0.3 K (0.54 °F)[2] 0.2 K (0.36 °F)[2] 1 K (1.8 °F)[2]	0.02% 0.02% 0.02% 0.02%
Thermocouples (TC)	K, J, T, E, L, U N, C, D S, B, R	typ. 0.5 K (0.9 °F) typ. 1 K (0.18 °F) typ. 2 K (3.6 °F)	typ. 0.25 K (0.45 °F)[2] typ. 0.5 K (0.9 °F)[2] typ. 1 K (1.8 °F)[2]	0.02% 0.02% 0.02%

1) % relates to the set span. Accuracy = digital + D/A accuracy

2) Only with the "Advanced Electronics" option

	Measuring range	Accuracy		
		Digital		D/A[1]
Resistance transmitter (Ω)	10 to 400 Ω 10 to 2000 Ω	± 0.08 Ω ± 1.6 Ω	± 0.04 Ω[2] ± 0.8 Ω[2]	0.02% 0.02%
Voltage transmitter (mV)	-20 to 100 mV	± 20 µV	± 10 µV[2]	0.02%

1) % relates to the set span. Accuracy = digital + D/A accuracy

2) Only with the "Advanced Electronics" option

Physical input range of the sensors	
10 to 400 Ω	Cu10, Cu50, Cu100, polynomial RTD, Pt50, Pt100, Ni100, Ni120
10 to 2000 Ω	Pt200, Pt500, Pt1000, Ni1000
-20 to 100 mV	Thermocouple type: C, D, E, J, K, L, N
-5 to 30 mV	Thermocouple type: B, R, S, T, U

Repeatability

0.03% of the physical input range (15 Bit)
Resolution A/D conversion: 18 Bit

With the "Advanced Electronics" option:
0.015% of the physical input range (16 Bit)

Influence of supply voltage

≤ ±0.005%/V deviation from 24 V, related to the full scale value

Long-term stability

≤ 0.1 K (0.18 °F)/year or ≤ 0.05%/year
Data under reference conditions. % relates to the set span. The larger value applies.

Influence of ambient temperature (temperature drift)

Total temperature drift = input temperature drift + output temperature drift

Effect on the accuracy when ambient temperature changes by 1 K (1.8 °F)		
Input 10 to 400 Ω	0.002% of measured value	0.001% of measured value[1)]
Input 10 to 2000 Ω	0.002% of measured value	0.001% of measured value[1]
Input -20 to 100 mV	typ. 0.002% of measured value (maximum value = 1.5 x typ.)	typ. 0.001% of measured value[1] (maximum value = 1.5 x typ.)
Input -5 to 30 mV	typ. 0.002% of measured value (maximum value = 1.5 x typ.)	typ. 0.001% of measured value[1] (maximum value = 1.5 x typ.)
Output 4 to 20 mA	typ. 0.002% of measured value (maximum value = 1.5 x typ.)	typ. 0.001% of span[1] (maximum value = 1.5 x typ.)

1) Only with the "Advanced Electronics" option

Typical sensitivity of resistance thermometers:		
Pt: 0.00385 * $R_{nominal}$/K	Cu: 0.0043 * $R_{nominal}$/K	Ni: 0.00617 * $R_{nominal}$/K

Example Pt100: 0.00385 x 100 Ω/K = 0.385 Ω/K

Typical sensitivity of thermocouples:					
B: 10 µV/K at 1000 °C (1832 °F)	C: 20 µV/K at 1000 °C (1832 °F)	D: 20 µV/K at 1000 °C (1832 °F)	E: 75 µV/K at 500 °C (932 °F)	J: 55 µV/K at 500 °C (932 °F)	K: 40 µV/K at 500 °C (932 °F)
L: 55 µV/K at 500 °C (932 °F)	N: 35 µV/K at 500 °C (932 °F)	R: 12 µV/K at 1000 °C (1832 °F)	S: 12 µV/K at 1000 °C (1832 °F)	T: 50 µV/K at 100 °C (212 °F)	U: 60 µV/K at 500 °C (932 °F)

Example for calculating measured error for ambient temperature drift:

Input temperature drift $\Delta\vartheta$ = 10 K (18 °F), Pt100, measuring range 0 to 100 °C (32 to 212 °F)
Maximum process temperature: 100 °C (212 °F)
Measured resistance value: 138.5 Ω (IEC 60751) at maximum process temperature

Typical temperature drift in Ω: (0.001% of 138.5 Ω) * 10 = 0.01385 Ω
Conversion to Kelvin: 0.01385 Ω / 0.385 Ω/K = 0.04 K (0.054 °F)

Influence of cold junction

Pt100 DIN IEC 751 Cl. B (internal cold junction with thermocouples TC)

Installation

Installation instructions

Mounting location
Direct mounting on the temperature sensor or indirect mounting using mounting bracket (see 'Accessories').

Environment

Ambient temperature limits

- Without display: –40 to +85 °C (–40 °F to +185 °F)
- With display: –40 to +70 °C (–40 °F to +158 °F)

For use in hazardous areas, see Ex certificate

The display can react slowly for temperatures < –20 °C (< –4 °F). Readability of the display cannot be guaranteed at temperatures < –30 °C (–22 °F).

Storage temperature

- Without display: –40 to +100 °C (–40 °F to +212 °F)
- With display: –40 to +85 °C (–40 °F to +185 °F)

Altitude

Up to 2000 m (6560 ft) above sea level according to IEC 61010-1, CSA 1010.1-92

Climate class

As per EN 60 654-1, Class C

Degree of protection

IP 67, NEMA 4x

Shock and vibration resistance

3g / 2 to 150 Hz as per IEC 60 068-2-6

Electromagnetic compatibility (EMC)

Interference immunity and interference emission as per EN 61 326-1 (IEC 1326) and NAMUR NE 21
0.08...2 GHz 10 V/m; 1.4...2 GHz 30 V/m to EN 61000-4-3

Condensation

Permitted

Installation category

I

Pollution degree

2

Mechanical construction

Design, dimensions

Die cast aluminum housing for general purpose or as option stainless steel housing

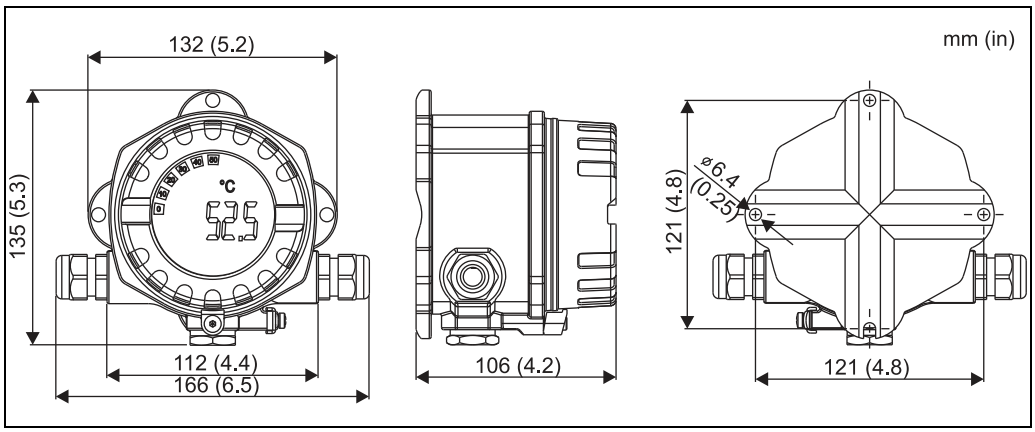

Dimensions in mm (and inches in brackets)

Display rotatable in 90°-stages

Weight

- Approx. 1.6 kg (3.53 lb) (aluminium housing)
- Approx. 4.2 kg (9.26 lb) (stainless steel housing)

Material

Housing	Nameplate
Die-cast aluminum housing AlSi10Mg/AlSi12 with powder coating on polyester basis	Aluminum AlMgl, anodized in black
Stainless steel 1.4435 (AISI 316L)	1.4404 (AISI 316L)

Terminals

Cables / wires up to max. 2.5 mm^2 (AWG 13) plus ferrule

Human interface

Display elements

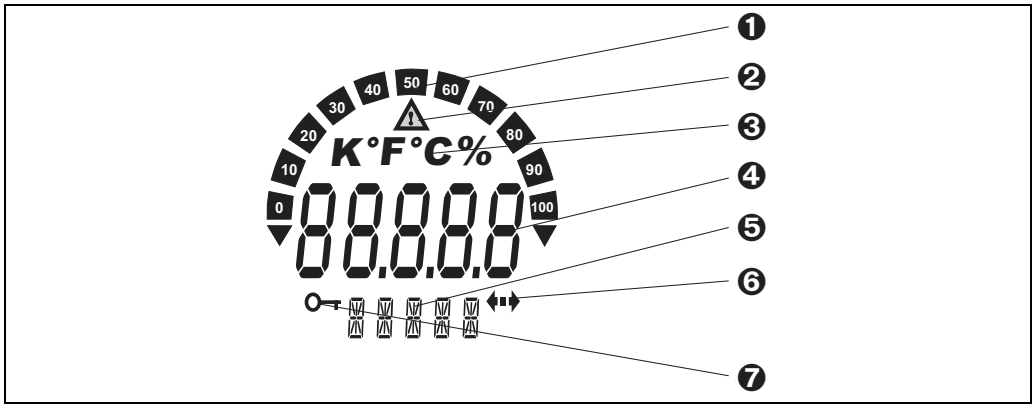

LC display of the field transmitter (illuminated, can be rotated in 90 stages)

1: Bar graph display in 0 % stages with indicators for overranging/underranging
2: 'Caution' display
3: Unit display K, °F, °C or %
4: Measured value display (digit height 20.5 mm / 0.81 ")
5: Status and information display
6: 'Communication' display
7: 'Programming disabled' display

Operating elements

No operating elements are present directly on the display. The device parameters of the field transmitter are configured using the DXR375 handheld terminal or a PC with Commubox FXA191 and operating software (e.g. FieldCare or ReadWin® 2000).

Remote operation

Configuration
See 'Operating elements'

Interface
HART® communication via transmitter power supply (e.g. RN221N; see 'Measuring system').

Configurable device parameters (selection)
Sensor type and type of connection, engineering units (°C/°F), measuring ranges, internal/external cold junction, compensation of wire resistance with 2-wire connection, failure mode, output signal (4 to 20/20 to 4 mA), digital filter (damping), offset, TAG+descriptor (8+16 characters), output simulation, customized linearisation, recording of min./max. process value, analog output: channel 1 (C1)

Certificates and approvals

CE mark

The device meets the statutory requirements of the EC directives. Endress+Hauser confirms successful testing of the device by affixing to it the CE mark.

Ex approval

Information about currently available Ex versions (ATEX, FM, CSA, etc.) can be supplied by your E+H Sales Centre on request. All explosion protection data are given in a separate documentation which is available upon request.

UL

Recognized component to UL 3111-1

Other standards and guidelines

- IEC 60529:
  Degrees of protection through housing (IP code)
- IEC 61010:
  Protection measures for electrical equipment for measurement, control, regulation and laboratory procedures
- IEC 1326:
  Electromagnetic compatibility (EMC requirements)
- NAMUR
  Association for Standards for Control and Regulation in the Chemical Industry

CSA GP

CSA General Purpose

Ordering information

Detailed ordering information is available from the following sources:
- In the **Product Configurator** on the Endress+Hauser website:
  www.endress.com → Select country → Instruments → Select device → Product page function: Configure this product
- From your Endress+Hauser Sales Center:
  www.endress.com/worldwide

Product Configurator - the tool for individual product configuration:
- Up-to-the-minute configuration data
- Depending on the device: Direct input of measuring point-specific information such as measuring range or operating language
- Automatic verification of exclusion criteria
- Automatic creation of the order code and its breakdown in PDF or Excel output format
- Ability to order directly in the Endress+Hauser Online Shop

Accessories

Device-specific accessories

Type	Description	Order Code
Mounting bracket	■ Mounting bracket, stainless steel pipe 1.5-3", 316L	51007995
Cable gland	■ Cable gland M20x1.5 ■ Cable gland NPT 1/2" D4-8.5, IP68 ■ Cable entry adapter M20x1.5 to NPT 1/2"	51004949 51006845 51004387
Blanks (blind)	■ M20x1.5 EEx-d/XP ■ G ½" EEx-d/XP ■ NPT ½" Aluminum	51004489 51004916 51004490
Overvoltage protection	■ Surge arrester HAW569 Order code: HAW569-A11A for non-hazardous areas Order code: HAW569-B11A for Ex areas ATEX 2(1)G EEx ia IIC	
Active barrier	■ Active barrier RN221 for non-hazardous areas or as Ex version Order code: RN221-... see "Documentation"	

Communication-specific accessories

Accessories	Description
Commubox FXA195 HART	For intrinsically safe HART communication with FieldCare via the USB interface. For details, see "Technical Information" TI404F/00
Commubox FXA291	Connects Endress+Hauser field devices with a CDI interface (= Endress+Hauser Common Data Interface) and the USB port of a computer or laptop. For details, see "Technical Information" TI405C/07
WirelessHART adapter	Is used for the wireless connection of field devices. The WirelessHART adapter can be easily integrated into field devices and existing infrastructures, offers data protection and transmission safety and can be operated in parallel with other wireless networks with minimum cabling complexity. For details, see Operating Instructions BA061S/04
Fieldgate FXA320	Gateway for the remote monitoring of connected 4-20 mA measuring devices via a Web browser. For details, see "Technical Information" TI025S/04
Fieldgate FXA520	Gateway for the remote diagnostics and remote configuration of connected HART measuring devices via a Web browser. For details, see "Technical Information" TI025S/04

System components and Recorders

Accessory	Description
Graphic Data Manager Memograph M	The Memograph M graphic data manager provides information on all the relevant process variables. Measured values are recorded correctly, limit values are monitored and measuring points analyzed. The data are stored in the 256 MB internal memory and also on a SD card or USB stick. For details, see "Technical Information" TI133R/09
Multi channel recorder Ecograph T	Multi-channel data recording system with LC color grafic display (120 mm / 4.7" screen size), galvanically isolated universal inputs (U, I, TC, RTD), digital input, transmitter power supply, limit relay, communication interfaces (USB, Ethernet, RS232/485), internal Flash memory and CompactFlash card. For details, see "Technical Information" TI115R/09
RN221N	Active barrier with power supply for safe separation of 4-20 mA standard signal circuits. Offers bidirectional HART transmission. For details, see "Technical Information" TI073R/09
RNS221	Supply unit for powering two 2-wire measuring devices solely in the non-Ex area. Bidirectional communication is possible via the HART communication jacks. For details, see "Technical Information" TI081R/09
RB223	One or two-channel, loop-powered barrier for the safe separation of 4 to 20 mA standard signal circuits. Bidirectional communication is possible via the HART communication jacks. For details, see "Technical Information" TI132R/09
RIA14, RIA16	Loop powered field indicator for 4 to 20 mA current loops, RIA14 with explosion proof enclosure. For details, see "Technical Informations" TI143R/09 and TI144R/09
RIA15	Process display, digital loop powered display for 4 to 20 mA current loops. For details, see "Technical Information" TI1040K/09

Documentation

- Field of activities brochure 'Temperature measurement' (FA006T/09/en)
- Installation instructions, FieldCare configuration software (BA031S/04/a4)
- Supplementary Ex documentation:
  ATEX II2G EEx d: XA048R/09/a3
  ATEX II1/2D: XA049R/09/a3
  ATEX II1G: XA050R/09/a3
  ATEX II3G: XA052R/09/a3
  ATEX II1/2GD: XA066R/09/a3
- Technical Information 'Surge arrester HAW569' (TI1013K/09)

Instruments International

Endress+Hauser
Instruments International AG
Kaegenstrasse 2
4153 Reinach
Switzerland

Tel.+41 61 715 81 00
Fax+41 61 715 25 00
www.endress.com
info@ii.endress.com

Endress+Hauser
People for Process Automation

TI00107R/09/en/13.12
71190515
FM9.0