TI01880F/00/EN/01.26-00
71755803
2026-01-12

Technical Information
Liquiphant FailSafe FTL81

Vibronic



Level switch for liquids for failsafe overfill protection system

Application

- Level switch for all liquids, for minimum or maximum detection in vessels e.g. process tanks, storage tanks, and piping, even in hazardous areas
- Reliable level switch for safety applications up to SIL 3
- A permanent LIVE signal is used for function monitoring
- Process temperature range: −60 to 280 °C (−76 to 536 °F)
- Pressures up to 100 bar (1 450 psi)
- Viscosities up to 10 000 mPa·s

Benefits

- 4-20 mA interface (in accordance with NAMUR NE06/NE43): easy integration via the evaluation unit (Nivotester FailSafe FTL825) with two-channel output (safety contacts) and locking option, or directly into a safety PLC
- Use in safety systems with functional safety requirements up to SIL 3 in accordance with IEC 61508/IEC 61511-1
- Proof testing: proof testing interval up to 12 years
- Slaves tested at the press of a button
- Permanent self-monitoring/internal redundancy
- No adjustment: quick, low-cost commissioning
- Monitoring of vibrating fork for damage, corrosion, buildup and mechanical blocking
- Second process seal (second line of defense) as standard for high temperatures or optionally available for all other versions

Endress+Hauser
People for Process Automation

Table of contents

About this document 3
Safety symbols 3
Electrical symbols 3
Symbols for certain types of Information 3
Symbols in graphics 3
Graphic conventions 3

Function and system design 4
Measuring principle 4
Measuring system 4
Dependability 4

Input 4
Measured variable 4
Measuring range 5

Output 5
Output signal 5
Signal on alarm 5
Load 5
Ex connection data 5
Galvanic isolation 5
Switch output 5

Electrical connection 6
Terminal assignment 6
Available device plugs 6
Supply voltage 7
Power consumption 7
Reverse polarity protection 7
Electrical connection 7
Potential equalization 8
Cable specifications 8
Overvoltage protection 8

Performance characteristics 9
Reference operating conditions 9
Taking the switch point into consideration 9
Maximum measurement error 9
Hysteresis 9
Repeatability 9
Influence of process temperature 10
Influence of process medium density 10
Influence of process pressure 10

Installation 10
Mounting location, orientation 10
Installation instructions 10
Installing the device in piping 13
Aligning the cable entry 13
Special installation instructions 14

Environment 15
Ambient temperature range 15
Storage temperature 16
Humidity 16
Operating height 16
Climate class 16
Degree of protection 16
Vibration resistance 17
Mechanical load 17
Pollution degree 17
Electromagnetic compatibility (EMC) 17

Process 17
Process temperature range 17
Thermal shock 17
Process pressure range 17
Test pressure 18
Medium density 18
Viscosity 19
Pressure tightness 19
Solids contents 19

Mechanical construction 19
Design, dimensions 19
Weight 24
Materials 25
Process connections 26

Operability 30
Operation concept 30
Local operation 30

Certificates and approvals 30
CE mark 30
Ex approval 30
Overfill protection system 30
Functional safety 30
Marine approvals 31
CRN approval 31
Pressure equipment with permitted pressure less than 200 bar, no pressure-bearing volume 31
Process seal as per ANSI/ISA 12.27.01 31

Ordering information 31
Service 31
Test, certificate, declaration 31
TAG 32

Accessories 32
Weather protection cover PA6 (aluminum housing (F13, F17) and 316L (F27)) 32
Weather protection cover PBT (plastic housing (F16)) 33
Weld-in adapter 33
M12 socket 33
Sliding sleeves for unpressurized operation 34
High pressure sliding sleeves 34

Documentation 36
Standard documentation 36
Supplementary device-dependent documentation 36

About this document

Safety symbols

DANGER
This symbol alerts you to a dangerous situation. Failure to avoid this situation will result in serious or fatal injury.

WARNING
This symbol alerts you to a potentially dangerous situation. Failure to avoid this situation can result in serious or fatal injury.

CAUTION
This symbol alerts you to a potentially dangerous situation. Failure to avoid this situation can result in minor or medium injury.

NOTICE
This symbol alerts you to a potentially harmful situation. Failure to avoid this situation can result in damage to the product or something in its vicinity.

Electrical symbols

Ground connection
Grounded clamp, which is grounded via a grounding system.

Protective earth (PE)
Ground terminals, which must be grounded prior to establishing any other connections. The ground terminals are located on the inside and outside of the device.

Symbols for certain types of Information

Permitted
Procedures, processes or actions that are permitted.

Forbidden
Procedures, processes or actions that are forbidden.

Tip
Indicates additional information

Reference to documentation

Reference to another section

1., 2., 3. Series of steps

Symbols in graphics

A, B, C ... View

1, 2, 3 ... Item numbers

Hazardous area

Safe area (non-hazardous area)

Graphic conventions

- Installation, explosion and electrical connection drawings are presented in simplified format
- Devices, assemblies, components and dimensional drawings are presented in reduced-line format
- Dimensional drawings are not to-scale representations; the dimensions indicated are rounded off to 2 decimal places
- Unless otherwise described, flanges are presented with sealing surface form EN 1091-1, B2; ASME B16.5, RF; JIS B2220, RF

Function and system design

Measuring principle

The sensor's vibrating fork vibrates at its natural frequency. As soon as the liquid covers the vibrating fork, the oscillation frequency decreases. The change in frequency causes the level switch to switch.

Point level measurement

Maximum or minimum detection for liquids in tanks or pipes in all industries. Suitable for leakage monitoring, pump dry-running protection or overfill prevention, for example.

Specific versions are suitable for use in hazardous areas.

The level switch differentiates between the "covered" and "not covered" conditions.

Depending on the MIN (minimum detection) or MAX (maximum detection) modes, there are two possibilities in each case: OK status and demand mode.

OK status
- In MIN mode, the vibrating fork is covered, e.g. pump dry-run protection
- In MAX mode, the vibrating fork is not covered, e.g. overfill protection

Demand mode
- In MIN mode, the vibrating fork is not covered, e.g. pump dry-run protection
- In MAX mode, the vibrating fork is covered, e.g. overfill protection system

Measuring system

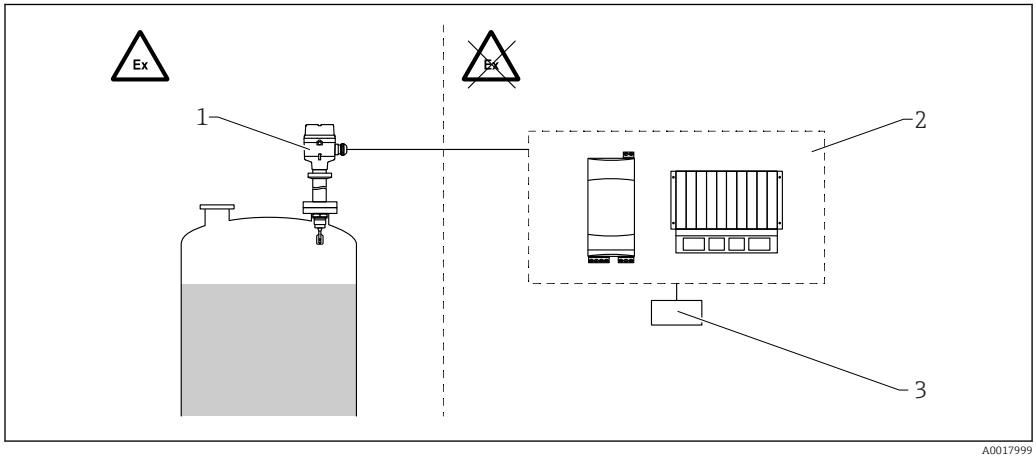

1 Example of a measuring system

1 Device with electronic insert FEL85 (4-20 mA)
2 Separate switch unit, e.g. Nivotester FailSafe FTL825, PLC, safety PLC
3 Actuator

The Nivotester FailSafe FTL825 supplies direct current to the device via a two-wire cable and receives a current of 4 to 20 mA. The switch status is interpreted via the current value. The intrinsically safe signal inputs of the Nivotester FailSafe FTL825 level switch are galvanically isolated from the mains and the output.

Dependability

IT security

The manufacturer warranty is valid only if the product is installed and used as described in the Operating Instructions. The product is equipped with security mechanisms to protect it against any inadvertent changes to the settings.

IT security measures, which provide additional protection for the product and associated data transfer, must be implemented by the operators themselves in line with their security standards.

Input

Measured variable

The point level signal is triggered according to the operating mode (minimum or maximum detection) when the level exceeds or falls below the relevant point level.

Measuring range

Depends on the installation location and the pipe extension ordered

Maximum sensor length: 3 m (10 ft)

Output

Output signal

Electronic insert FEL85

2-wire 4-20 mA
- For connecting to the separate Nivotester FailSafe FTL825 switching unit, a programmable logic controller (PLC), a safety-related PLC or 4-20 mA AI modules in accordance with EN 61131-2
- Output signal jump from high to low current when the point level is reached:
  - Minimum detection: from 18.5 mA to 9.0 mA
  - Maximum detection: from 13.5 mA to 6.0 mA
- A permanent LIVE signal (0.25 Hz, ±0.5 mA amplitude) is superimposed on the output signal in the OK status.

Signal on alarm

Error current in accordance with NAMUR NE43
Output current < 3.6 mA in the following cases:
- Function check: End proof test
- Out of specification: Correct density setting
- Maintenance required: Clean sensor
- Failure: Replace electronic insert
- Failure: Replace device

Load

R = (U - 12 V / 22 mA)

U = Supply voltage range: DC 12 to 30 V

Ex connection data

See safety instructions (XA): All data relating to explosion protection are provided in separate Ex documentation and are available from the Downloads area of the Endress+Hauser website. The Ex documentation is supplied as standard with all devices approved for use in explosion hazardous areas.

Galvanic isolation

Provide between the sensor and the power supply

Switch output

Switching delay time

The switching delay time is:
- Approx. 0.5 s ± 0.2 s when vibrating fork is covered
- Approx. 1.0 s ± 0.2 s when vibrating fork is free
- Dwell time: at least 0.3 s

Electrical connection

Terminal assignment

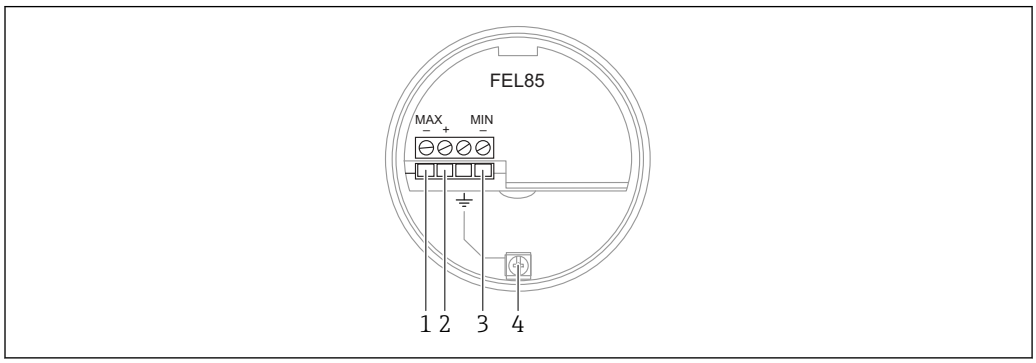

2 *Connection terminals and ground terminal in the connection compartment*

1 *Negative terminal for maximum detection*
2 *Positive terminal*
3 *Negative terminal for minimum detection*
4 *Internal ground terminal*

Available device plugs

Connection via M12 plug connector

For maximum detection mode of operation with an M12 plug connector, it is not necessary to open the housing for connection purposes.

M12 plug

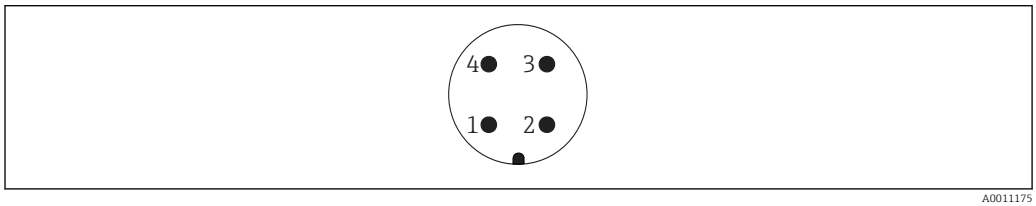

3 *M12 plug, pin assignment*

1 *Signal +*
2 *Not used*
3 *Signal –*
4 *Ground*

FEL85 Maximum detection mode of operation (factory setting)

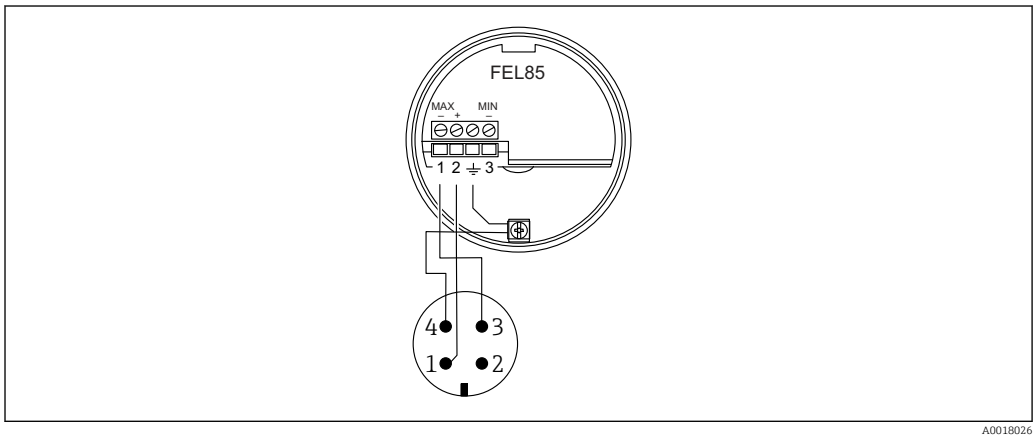

4 *Terminal assignment with M12 connector, maximum detection mode of operation*

FEL85 Minimum detection mode of operation

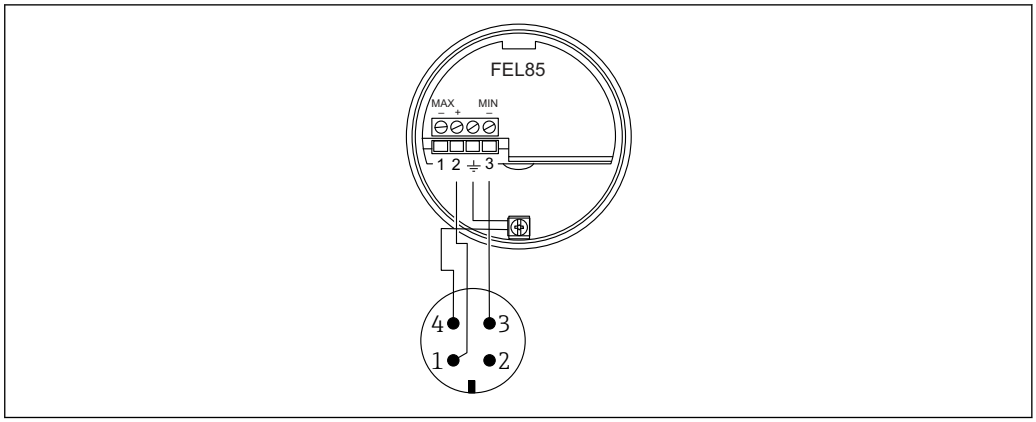

5 Terminal assignment with M12 connector, minimum detection mode of operation

Supply voltage

- Nominal supply voltage: DC 24 V
- Supply voltage range: DC 12 to 30 V

Power consumption

< 660 mW

Reverse polarity protection

Available

Electrical connection

The mode of operation (minimum detection or maximum detection) is selected via the connection coding on the electronic insert.

Two-wire connection for connecting to:
- Nivotester FailSafe FTL825 (See TI01027F for further information on the FTL825)
- PLC (programmable logic controller)
- Safety PLC
- 4-20 mA AI module according to EN 61131-2

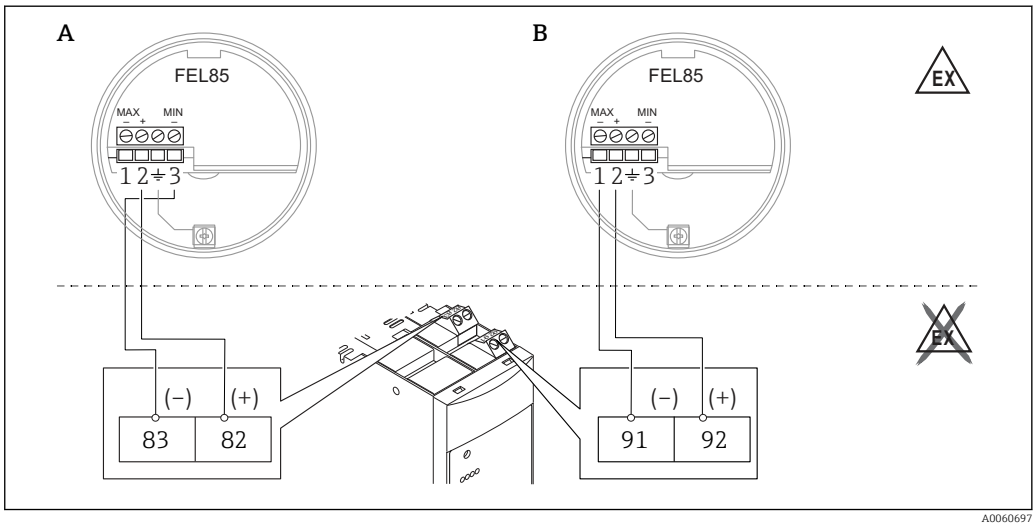

6 Connecting to Nivotester FailSafe FTL825

A Minimum detection
B Maximum detection

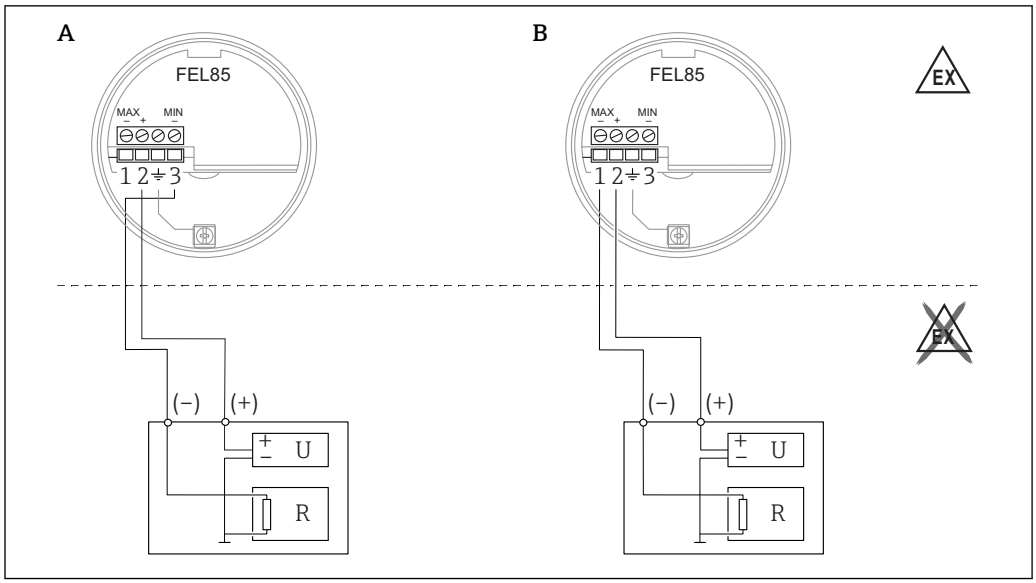

7 *Connecting to a PLC*

A Minimum detection
B Maximum detection

Potential equalization

WARNING

Ignitable sparks or excessively high surface temperatures.
Explosion hazard!

► Please refer to the separate documentation on applications in hazardous areas for the safety instructions.

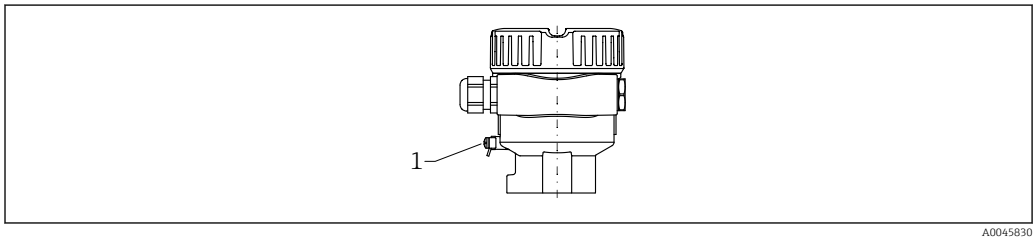

1 Ground terminal for connecting the potential matching line (example)

If necessary, the potential matching line can be connected to the external ground terminal of the transmitter before the device is connected.

For optimum electromagnetic compatibility:
- Potential matching line as short as possible
- Observe a cross-section of at least 2.5 mm² (14 AWG)

Cable specifications

- Electronic insert: cross-section max. 2.5 mm² (14 AWG)
- Maximum cable length: 1000 m (3281 ft)
- Maximum cable resistance: 25 Ω per core
- Maximum cable capacitance 100 nF
- Protective earth in housing: cross-section max. 2.5 mm² (14 AWG)
- Equipotential bonding connection on housing exterior: cross-section max. 4 mm² (12 AWG)

Overvoltage protection

Overvoltage category II

Performance characteristics

Reference operating conditions

- Ambient temperature: 23 °C (73 °F) ±5 °C (9 °F)
- Process temperature: 23 °C (73 °F)
- Humidity φ = constant, in the range: 5 to 80 % rF ± 5 %
- Medium density (water): 1 g/cm³ (62.4 lb/ft³)
- Medium viscosity: 1 mPa·s
- Atmospheric pressure p_A = constant, in the range: 860 to 1 060 mbar (12.47 to 15.37 psi)
- Process pressure: 1 bar (15 psi)
- Sensor installation: vertically from above
- Density selector switch, low: 0.7 g/cm³ (43.7 lb/ft³)
- Density selector switch, high: > 2.0 g/cm³ (124.9 lb/ft³)
- Mode of operation: Maximum detection

Taking the switch point into consideration

Minimum distance between the tuning fork and the tank wall or pipe wall: 10 mm (0.39 in)

Switch point at reference operating conditions

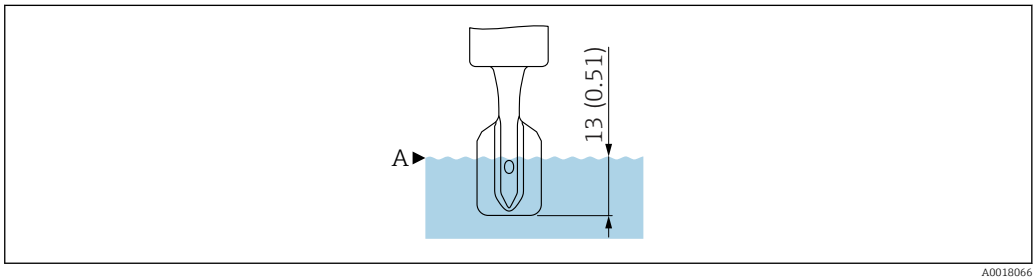

8 *Switch point at reference operating conditions. Unit of measurement mm (in)*

A Switch point

Switch point outside reference operating conditions

Outside the reference operating conditions, the switch point is in the area of the vibrating fork.

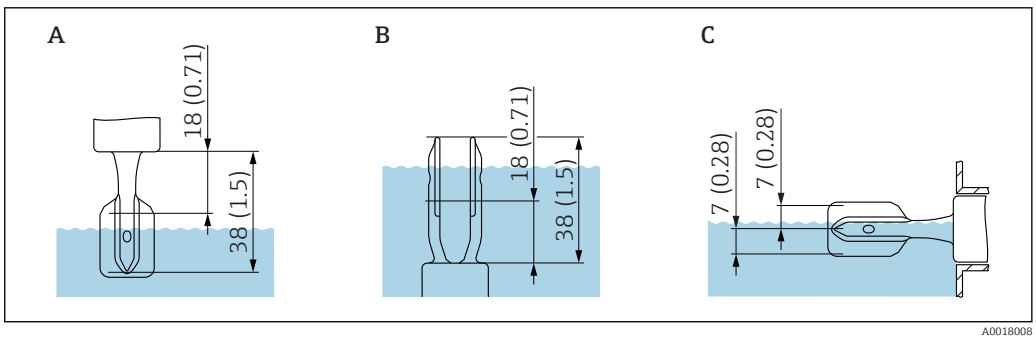

9 *Switch points depending on the orientation. Unit of measurement mm (in)*

A Installation from above
B Installation from below
C Installation from the side

Maximum measurement error

At reference operating conditions: max. ± 1 mm (0.04 in) at switch point

Hysteresis

Approx. 2 mm (0.08 in)

Repeatability

0.1 mm (0.004 in)

Influence of process temperature

- The switch point moves between 1.8 to −2.8 mm (0.07 to −0.11 in) in the temperature range of −50 to 150 °C (−58 to 300 °F)
- The switch point moves between 1.4 to −5.5 mm (0.06 to −0.22 in) in the temperature range of −60 to 280 °C (−76 to 540 °F)

Influence of process medium density

The switch point moves between 4.8 to −3.5 mm (0.19 to −0.14 in) in the pressure range of 0.5 to 1.5 g/cm³ (31.2 to 93.6 lb/ft³)

Influence of process pressure

- The switch point moves between 0 to −2.5 mm (0 to −0.1 in) in the pressure range of −1 to 64 bar (−14.5 to 928 psi)
- The switch point moves between 0 to −3.9 mm (0 to −0.15 in) in the pressure range of −1 to 100 bar (−14.5 to 1 450 psi)

Installation

Mounting location, orientation

Mounting instructions

- Any orientation for version with a pipe length up to approx. 500 mm (19.7 in)
- Vertical orientation from above for device with long pipe
- Minimum distance between the vibrating fork and the tank wall or pipe wall: 10 mm (0.39 in)

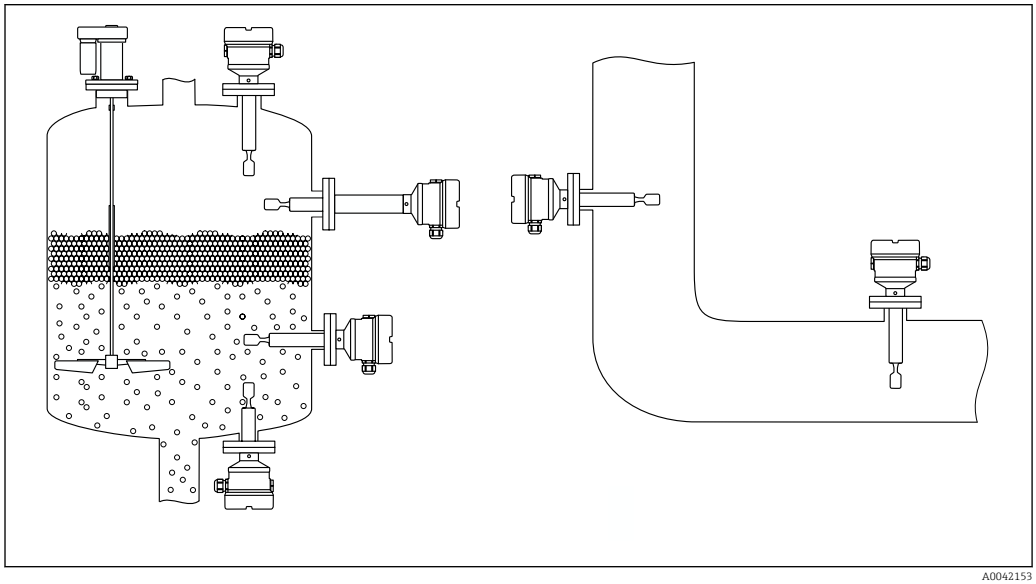

A0042153

10 Installation examples for a vessel, tank or pipe

Installation instructions

Viscosity depending on the mode of operation

With regard to the viscosity of the medium, the restrictions for applications involved in safety-related operation must be observed, as specified in the Functional Safety Manual.

Align the vibrating fork so that the narrow sides of the vibrating fork point upwards and downwards, allowing the liquid to drain off properly.

Maximum detection: ≤ 10 000 mPa·s

Minimum detection: ≤ 350 mPa·s

Minimum detection, high temperature 230 to 280 °C (450 to 536 °F): ≤ 100 mPa·s

Low viscosity

It is permitted to position the tuning fork within the installation socket.

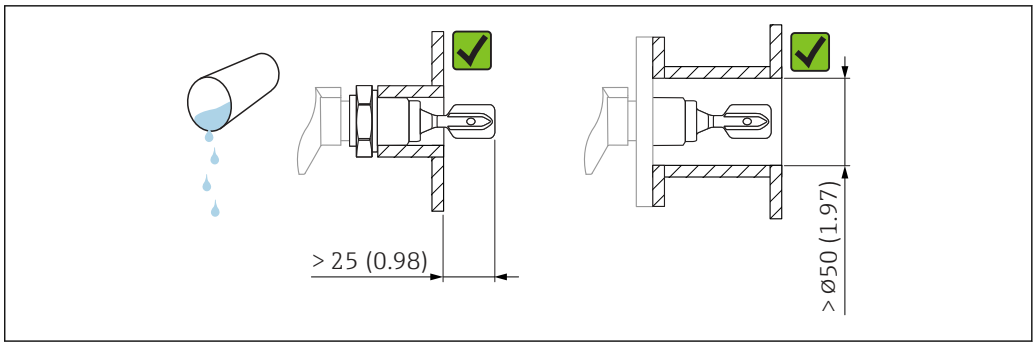

11 *Example of installation for low-viscosity liquids. Unit of measurement mm (in)*

High viscosity

NOTICE

Highly viscous liquids may cause switching delays.

- ▶ Make sure that the liquid can run off the tuning fork easily.
- ▶ Deburr the socket surface.

The tuning fork must be located outside the installation socket!

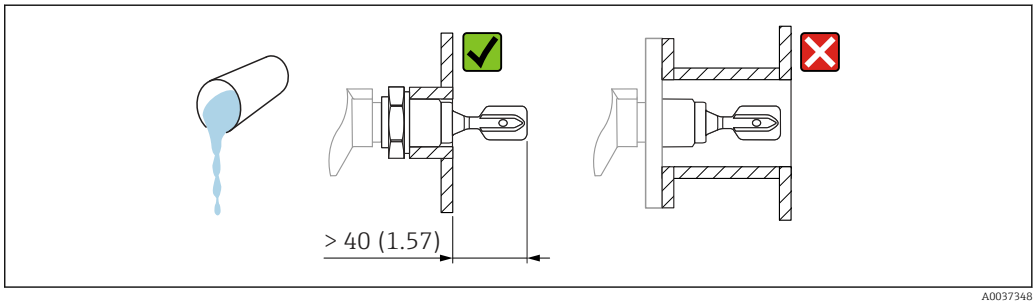

12 *Installation example for a highly viscous liquid. Unit of measurement mm (in)*

Preventing buildup

NOTICE

Buildup formation can restrict applications during safety-related operation.

- ▶ Refer to the Functional Safety Manual.

Ensure that there is sufficient distance between the expected buildup on the tank wall and the fork.

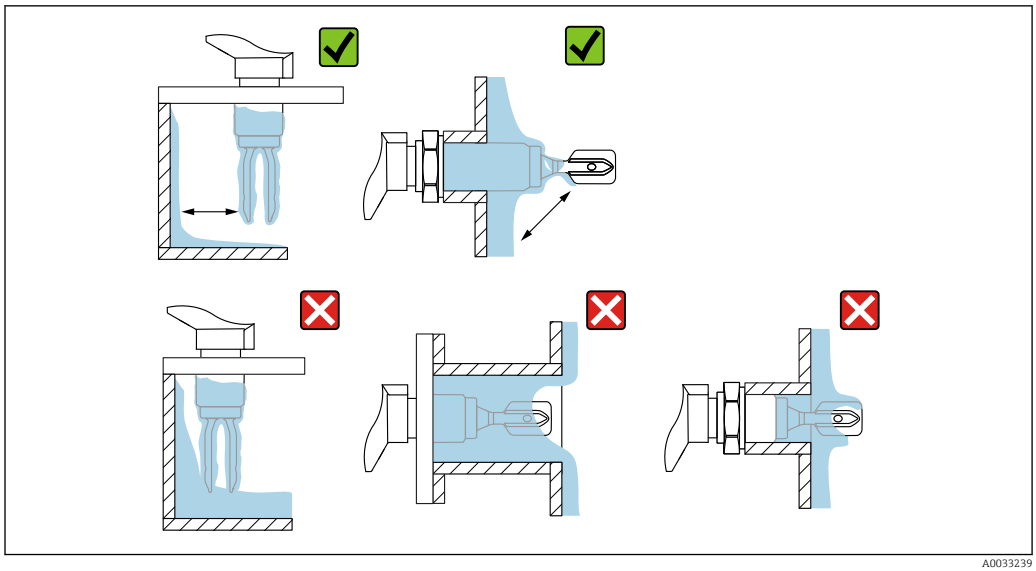

A0033239

13 *Installation examples for a highly viscous process medium*

Take clearance into consideration

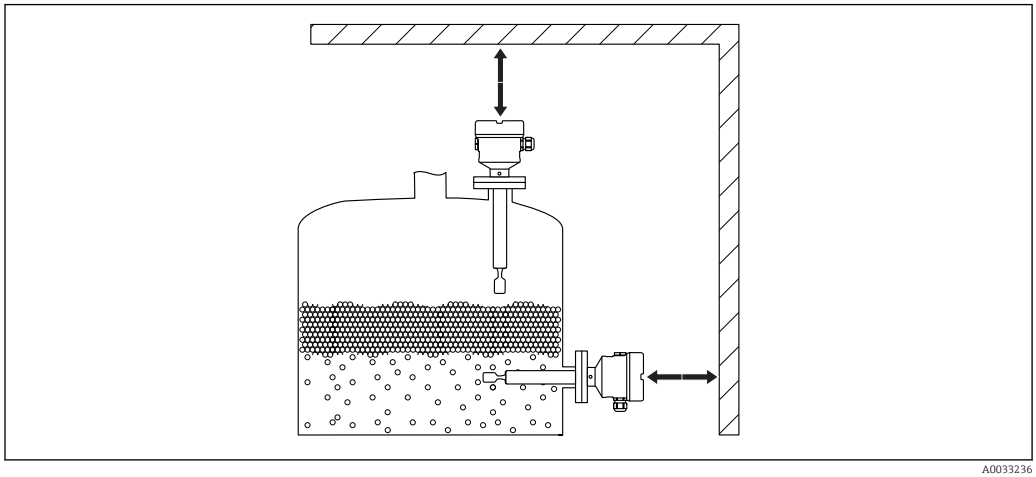

A0033236

14 *Take clearance outside the tank into consideration*

Aligning the vibrating fork using the marking

The vibrating fork can be aligned using the marking in such a way that the medium drains off easily and buildup is avoided.

- Markings for threaded connections: Circle (material specification/thread designation opposite)
- Markings for flange connections: line or double line

In addition, the threaded connections have a matrix code that is **not** used for alignment.

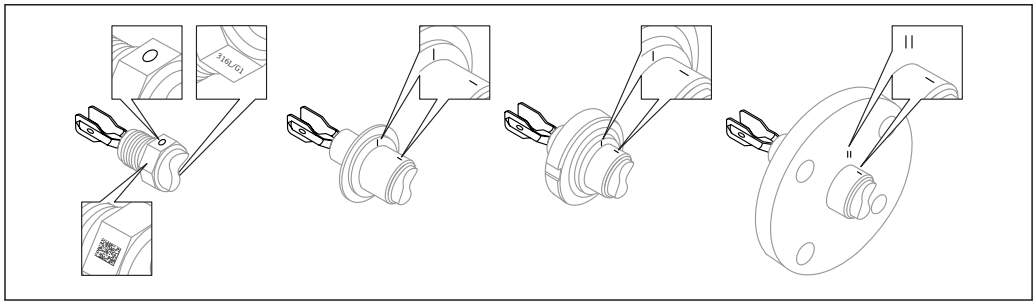

A0039125

15 *Position of the vibrating fork when installed horizontally in the vessel using the marking*

Installing the device in piping

- Flow velocity up to 5 m/s with viscosity 1 mPa·s and density 1 g/cm³ (62.4 lb/ft³). Check for correct functioning in the event of other process medium conditions.
- If the vibrating fork is correctly aligned and the marking is pointing in the flow direction, the flow will not be significantly obstructed.
- The marking is visible when installed.
- Pipe diameter: ≥ 50 mm (2 in)

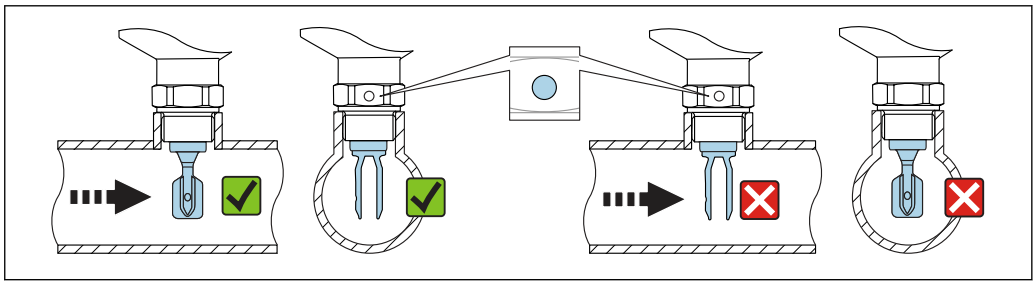

A0034851

16 Installation in pipes (take fork position and marking into consideration)

Aligning the cable entry

All housings can be aligned. Forming a drip loop on the cable prevents moisture from entering the housing.

Housing with locking screw (316L (F27) and 316L hygienic (F15))

The housing can be aligned using a locking screw.

Aligning the housing:

1. Open the housing cover and loosen the locking screw (3-4 rotations).
2. Rotate the housing into the correct position.
3. Tighten the locking screw with maximum 0.9 Nm and close the housing cover.

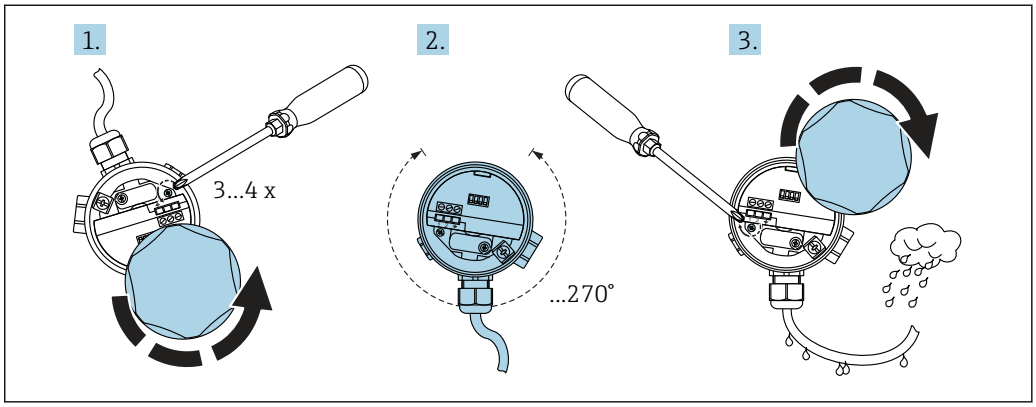

A0018018

17 Housing with locking screw; form a drip loop on the cable

Housing without locking screw (plastic (F16), aluminum (F13, F17, T13))

The housing can be rotated up to 300 °.

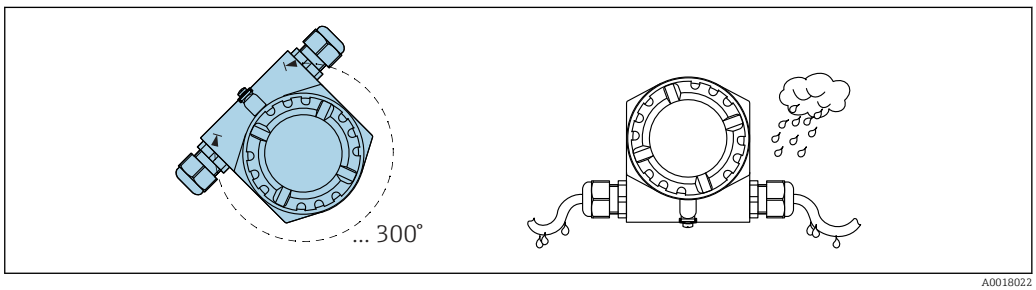

A0018022

18 Housing without set screw; form a drip loop on the cable

Special installation instructions

Vessel with heat insulation

If process temperatures are high, the device should be included in the vessel insulation system to prevent the electronics from heating as a result of thermal radiation or convection. The insulation in this case should not be higher than the neck of the device.

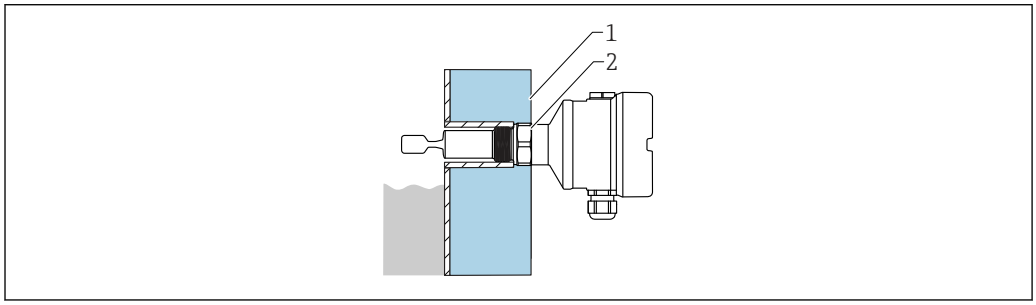

19 *Example of a vessel with heat insulation*

1 Vessel insulation
2 Insulation (up to the housing neck max.)

Support the device

Support the device in the event of severe dynamic load. Maximum lateral loading capacity of the pipe extensions and sensors: 75 Nm (55 lbf ft).

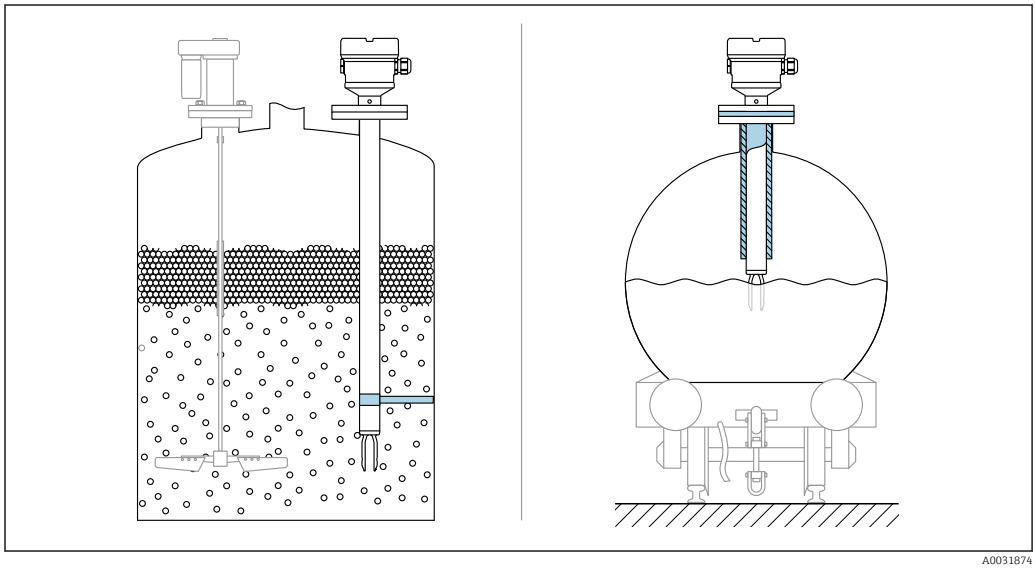

20 *Examples of support in the event of dynamic load*

Marine approval: In the case of pipe extensions or sensors longer than 1 600 mm (63 in), a support is needed at least every 1 600 mm (63 in).

Weld-in adapter with leakage hole

Position the weld-in adapter so that the leakage hole points downwards. This allows any leakage to be detected at an early stage, as the escaping medium becomes visible.

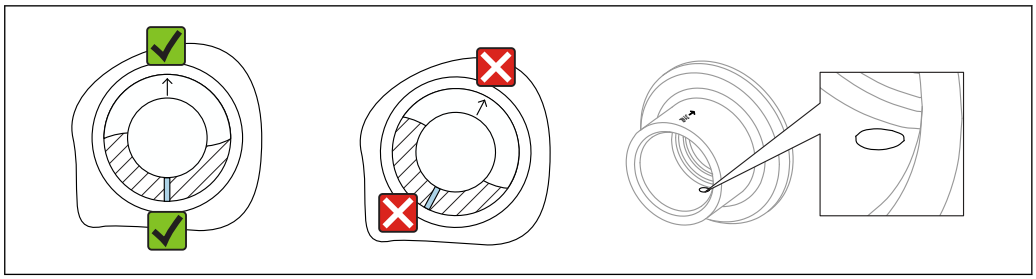

A0039230

21 Weld-in adapter with leakage hole

Sliding sleeves

For more details, see the "Accessories" section.

Special Documentation SD02398F (Installation Instructions)

Environment

Ambient temperature range

−40 to 70 °C (−40 to 158 °F)

Optionally available to order:
- −50 °C (−58 °F) with restricted operating life and performance
- −60 °C (−76 °F) for devices with a process temperature up to 230 °C (446 °F)/280 °C (536 °F) with restricted operating life and performance

  Below −50 °C (−58 °F): Devices can be permanently damaged

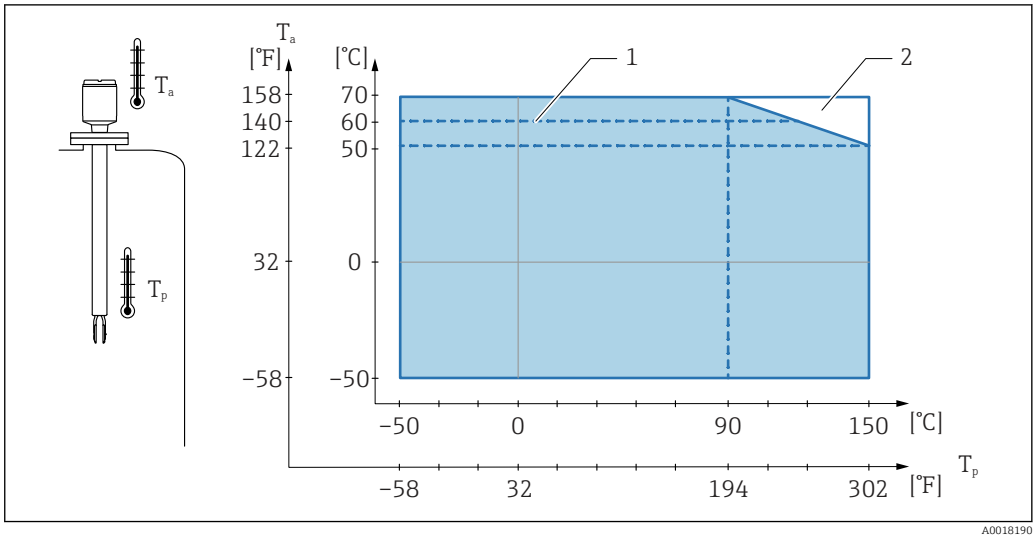

A0018190

22 Permitted ambient temperature T_a at the housing as a function of the process temperature T_p in the vessel; maximum process temperature 150 °C (302 °F)

1 Maximum ambient temperature in hazardous area (T6) and intrinsically safe power supply
2 Additional usable temperature range for devices with temperature spacer or pressure-tight feedthrough

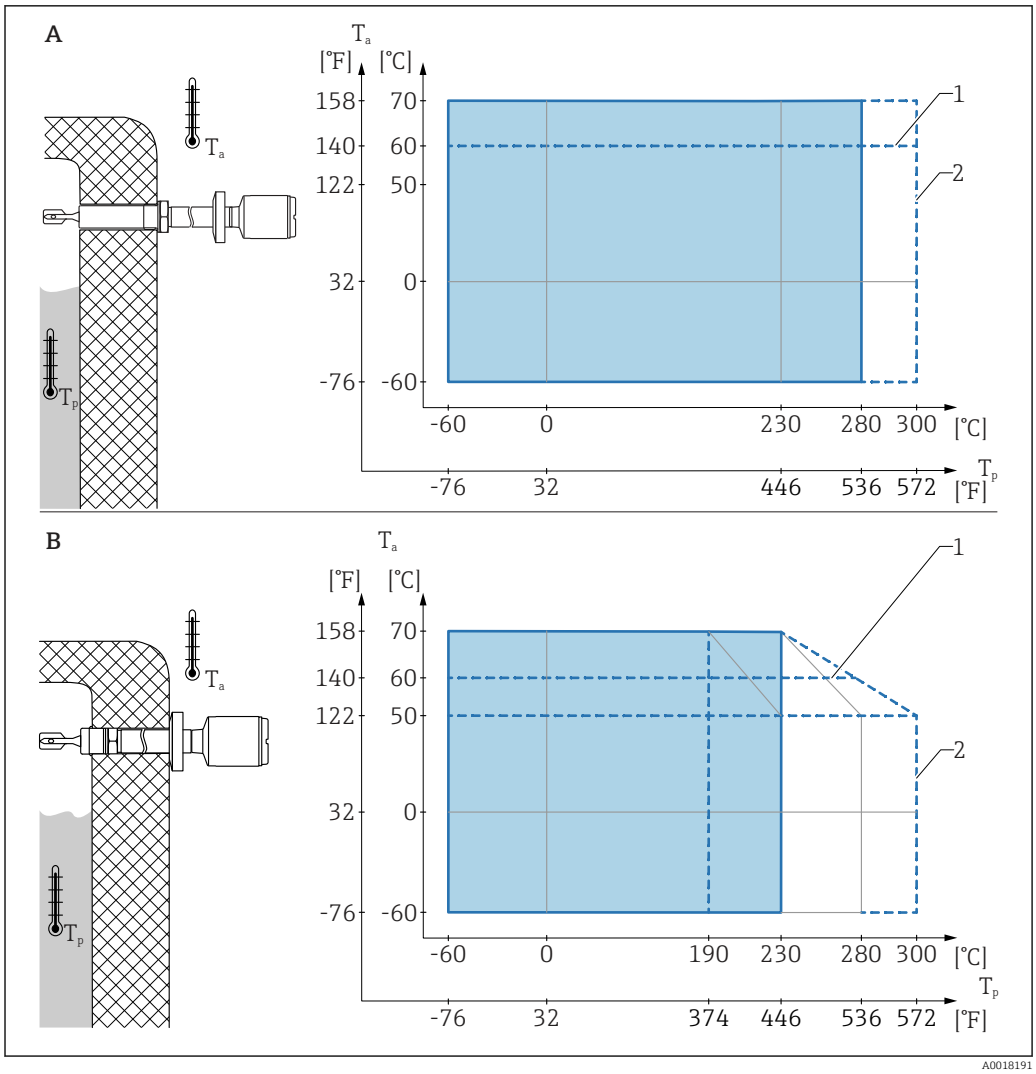

23 *Permitted ambient temperature T_a at the housing as a function of the process temperature T_p in the vessel; maximum process temperature 230 °C (446 °F) or 280 °C (536 °F)*

A Temperature spacer inside insulation
B Temperature spacer outside insulation
1 Maximum ambient temperature in hazardous area (T6) and intrinsically safe power supply
2 Maximum 50 h on cumulative basis

Outdoor operation in strong sunlight:
- Mount the device in a shaded location
- Avoid direct sunlight, particularly in warmer climatic regions
- Use a protective cover, which can be ordered as an accessory

Storage temperature	−50 to 80 °C (−58 to 176 °F)
Humidity	Operation up to 100 %. Do not open in a condensing atmosphere.
Operating height	As per IEC 61010-1 Ed.3: Up to 2 000 m (6 500 ft) above sea level
Climate class	As per IEC 60068-2-38 test Z/AD
Degree of protection	Tested in accordance with EN 60529 and NEMA 250

Housing
- Plastic (F16):
  IP66/67/NEMA Type 4X enclosure
- 316L, hygienic (F15):
  IP66/67/NEMA Type 4X enclosure
- 316L (F27):
  IP66/68/NEMA Type 4X/6P enclosure
- Aluminum (F17):
  IP66/67/NEMA Type 4X enclosure
- Aluminum (F13):
  IP66/68/NEMA Type 4X/6P enclosure
- Aluminum (T13) with separate terminal compartment (Ex d):
  IP66/68/NEMA Type 4X/6P enclosure

Vibration resistance

As per IEC 60068-2-64, load class 1 $(m/s^2)^2/Hz$, 3 x 100 minutes

Mechanical load

Support the device in the event of severe dynamic load. Maximum lateral loading capacity of the pipe extensions and sensors: 75 Nm (55 lbf ft).

For more details, see the "Supporting the device" section.

Pollution degree

Pollution degree 2

Electromagnetic compatibility (EMC)
- Electromagnetic compatibility as per EN 61326 series and NAMUR recommendation EMC (NE21)
- 1 % span ≤ 160 µA

For more details, refer to the EU Declaration of Conformity.

Process

Process temperature range
- −50 to 150 °C (−58 to 302 °F)
- −60 to 280 °C (−76 to 536 °F)/to 300 °C (572 °F) for max. 50 h on cumulative basis

Pay attention to pressure and temperature dependencies.

Liquid gas application:
−50 to 60 °C (−58 to 140 °F)

Thermal shock

≤ 120 K/s

Process pressure range

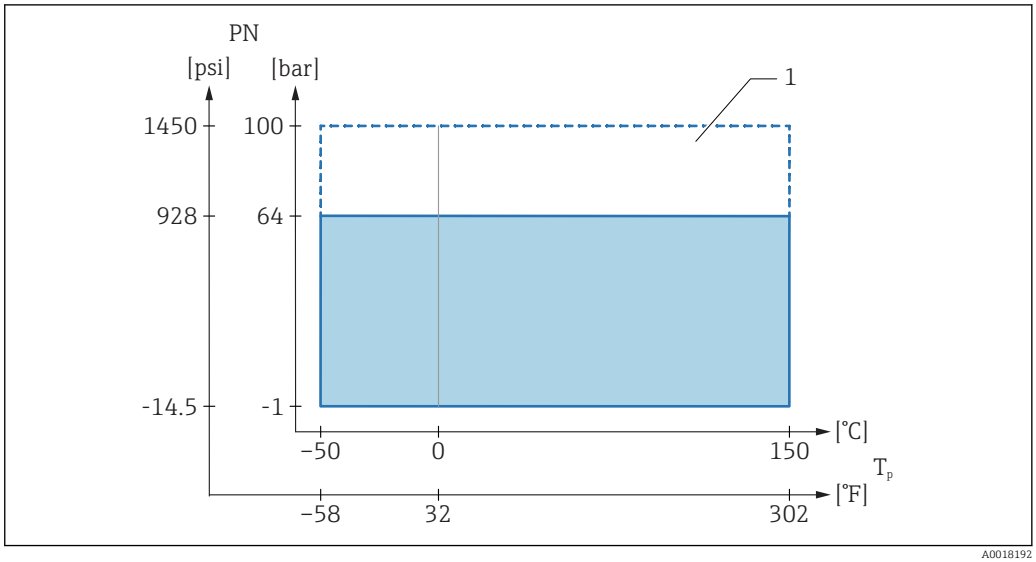

24 Process pressure range at process temperature T_p to 150 °C (300 °F)

1 Permitted pressure rating for version with option 100 bar (1450 psi)

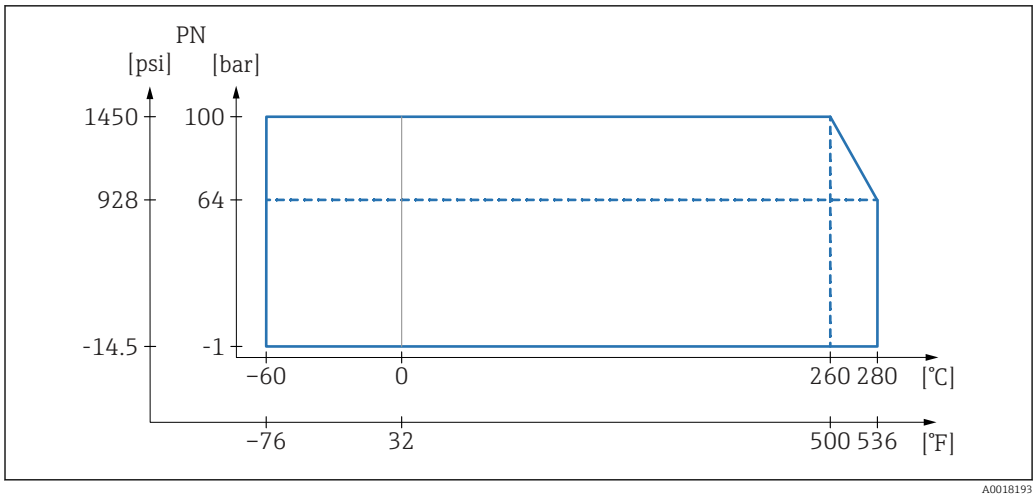

25 *Process pressure range for high-temperature version with 230 °C (450 °F)/280 °C (540 °F)*

The maximum pressure for the device depends on the lowest-rated element with regard to pressure.

Components are: process connection, optional mounting parts, or accessories.

WARNING

Incorrect design or use of the device may lead to bursting parts!

This may result in severe, possibly irreversible injury to persons and environmental hazards.

- Only operate the device within the specified limits for the components!
- MWP (maximum working pressure): The maximum working pressure is specified on the nameplate. This value refers to a reference temperature of +20 °C (+68 °F) and may be applied to the device for an unlimited time. Observe the temperature dependency of the maximum working pressure. For higher temperatures, refer to the following standards for the permitted pressure values for flanges:EN 1092-1 (materials 1.4435 and 1.4404 are identical with regard to their stability/temperature property and are grouped together in under 13E0 in EN 1092-1 Tab. 18; the chemical composition of the two materials can be identical), ASME B 16.5a, JIS B 2220 (the latest version of the standard applies in each case).
- The Pressure Equipment Directive (2014/68/EU) uses the abbreviation "PS". The abbreviation "PS" corresponds to the maximum working pressure of the device.
- MWP data that deviate from this are provided in the relevant sections of the Technical Information.

Test pressure

Process pressure P_N = 64 bar (928 psi)

- Test pressure = 100 bar (1 450 psi) = 1.5 · P_N
- Burst pressure > 200 bar (2 900 psi)

Process pressure P_N = 100 bar (1 450 psi)

- Test pressure = 150 bar (2 175 psi) = 1.5 · P_N
- Burst pressure > 400 bar (5 800 psi)

The device function is limited during the pressure test.

Mechanical integrity is guaranteed up to 1.5 times the process nominal pressure PN.

Medium density

Set the density at the two rotary switches ("Low" density and "High" density).

Only the density setting combinations indicated below are permitted.

Maximum detection

- Combination 1: Liquid gas
  - Density ρ_{Low}: 0.4 g/cm³ (25.0 lb/ft³)
  - Density ρ_{High}: 2.0 g/cm³ (124.9 lb/ft³)
- Combination 2: Other liquids
  - Density ρ_{Low}: 0.7 g/cm³ (43.7 lb/ft³)
  - Density ρ_{High}: >2.0 g/cm³ (124.9 lb/ft³)

Minimum detection

- Combination 1: Liquid gas
  - Density ρ_{Low}: 0.4 g/cm³ (25.0 lb/ft³)
  - Density ρ_{High}: 0.7 g/cm³ (43.7 lb/ft³)
- Combination 2, e.g. alcohol
  - Density ρ_{Low}: 0.6 g/cm³ (37.5 lb/ft³)
  - Density ρ_{High}: 0.9 g/cm³ (56.2 lb/ft³)
- Combination 3, e.g. water
  - Density ρ_{Low}: 0.7 g/cm³ (43.7 lb/ft³)
  - Density ρ_{High}: 1.2 g/cm³ (74.9 lb/ft³)
- Combination 4, e.g. acid
  - Density ρ_{Low}: 0.9 g/cm³ (56.2 lb/ft³)
  - Density ρ_{High}: 2.0 g/cm³ (124.9 lb/ft³)

Viscosity

- Maximum detection: ≤ 10 000 mPa·s
- Minimum detection: ≤ 350 mPa·s
- Minimum detection, high temperature (230 °C (450 °F)/280 °C (536 °F)): ≤ 100 mPa·s

Pressure tightness

Up to vacuum

In vacuum evaporation plants, select the 0.4 g/cm³ (25.0 lb/ft³)/ density setting.

Solids contents

Ø ≤ 5 mm (0.2 in)

Mechanical construction

Design, dimensions

The following dimensions are rounded values. As a result, there may be deviations from the specifications in the Product Configurator at www.endress.com.

To view CAD data:

1. Enter www.endress.com in your web browser
2. Search for the device
3. Select the **Configuration** button
4. Configure the device
5. Select the **CAD drawings** button

Device height

The device height consists of the following components:
- Housing including cover
- Temperature spacer with pressure-tight or gas-tight feedthrough (second line of defense), optional
- Short pipe version or pipe extension
- Process connection

The individual heights of the components can be found in the following sections:
- Determine the height of the device and add the individual heights
- Take the installation clearance into consideration (space that is needed to install the device)

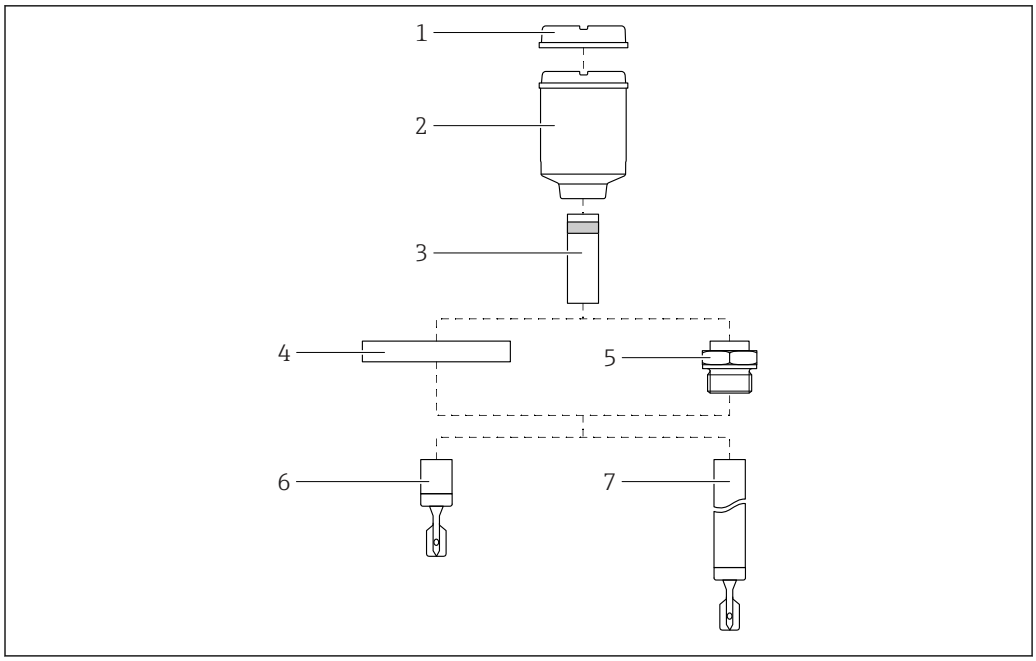

26 Components for determining the height of the device

1 Cover with sight glass (optional)
2 Housing with cover
3 Temperature spacer with pressure-tight or gas-tight feedthrough (optional)
4 Process connection flange
5 Process connection thread
6 Probe design: short pipe version with vibrating fork
7 Probe design: pipe extension with vibrating fork

Housing and cover

Plastic housing (F16)

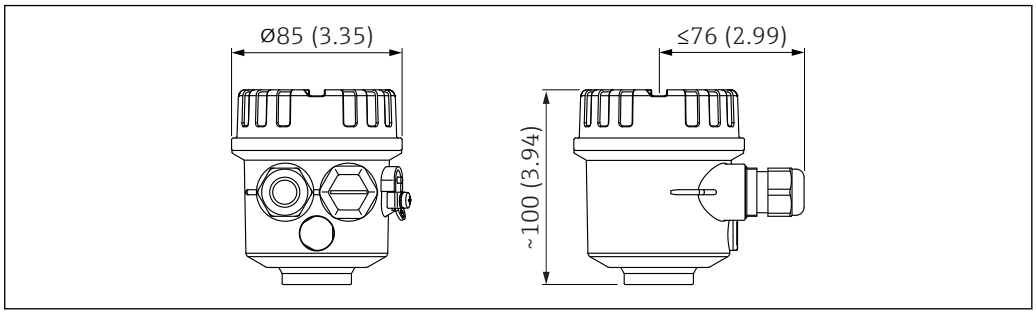

27 *Dimensions of plastic housing. Unit of measurement mm (in)*

316L housing, hygienic (F15)

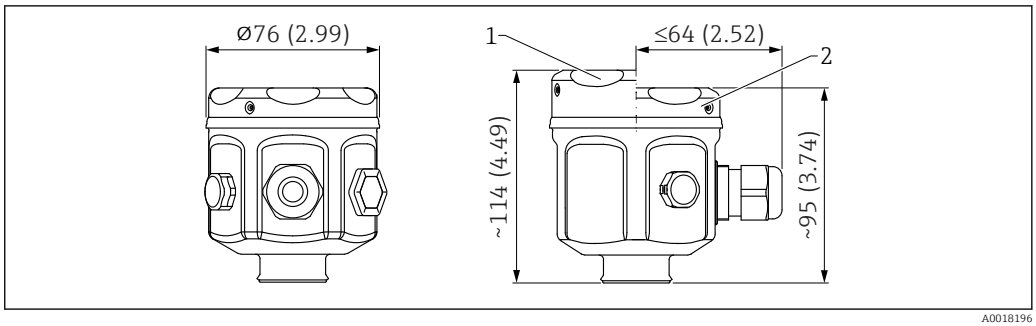

28 *Dimensions of 316L housing, hygienic. Unit of measurement mm (in)*

1 *Cover with sight glass (optional)*
2 *Cover without sight glass*

Aluminum housing (F17)

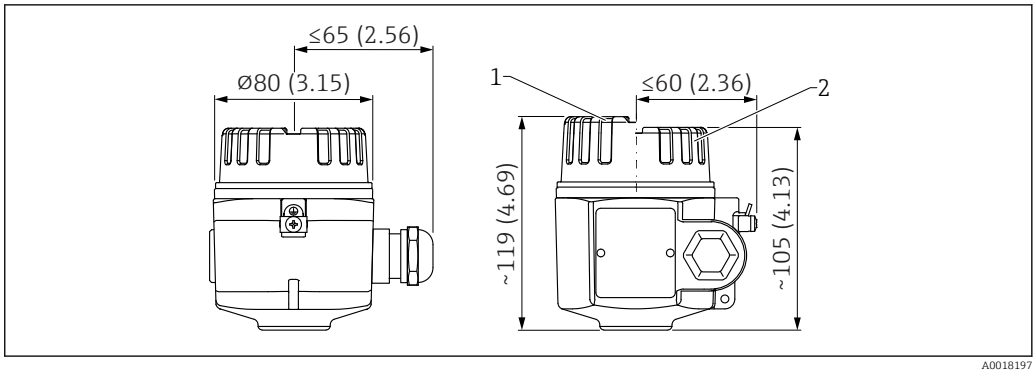

29 *Dimensions of aluminum housing. Unit of measurement mm (in)*

1 *Cover with sight glass (optional)*
2 *Cover without sight glass*

Aluminum housing (F13)

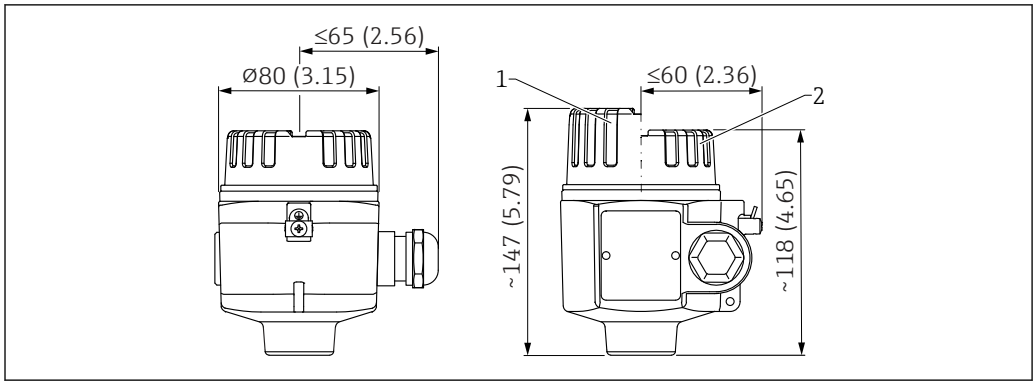

30 Dimensions of aluminum housing, with adapter screwed onto sensor. Unit of measurement mm (in)

1 Cover with sight glass (optional)
2 Cover without sight glass

316L housing (F27)

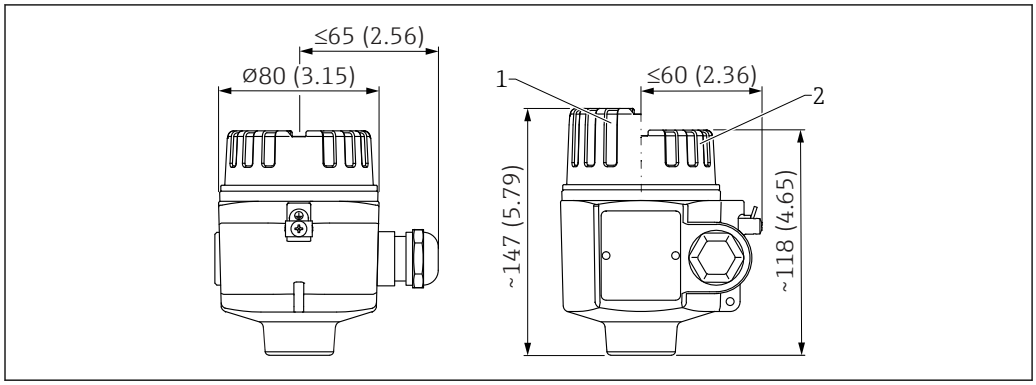

31 Dimensions of 316L housing, with adapter screwed onto sensor. Unit of measurement mm (in)

1 Cover with sight glass (optional)
2 Cover without sight glass

Aluminum housing (T13) with separate terminal compartment

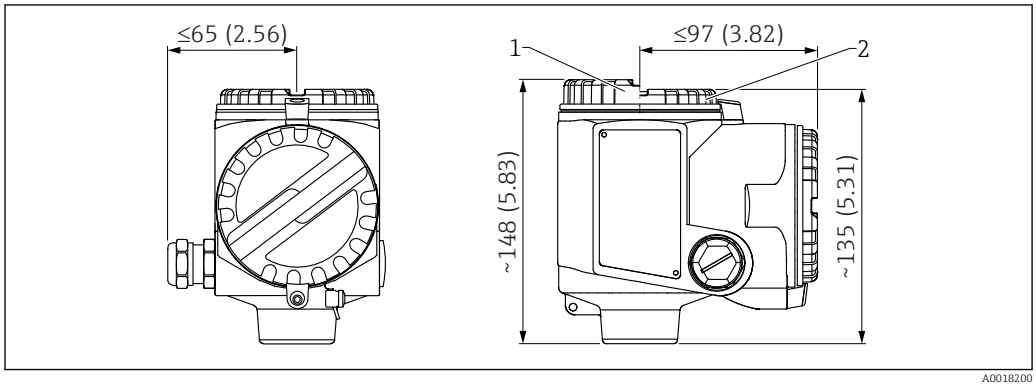

32 Dimensions of aluminum housing with separate terminal compartment. Unit of measurement mm (in)

1 Cover with sight glass (optional)
2 Cover without sight glass

Ground terminal

- Ground terminal inside the housing, max. conductor cross-section 2.5 mm² (14 AWG)
- Ground terminal outside on the housing, max. conductor cross-section 4 mm² (12 AWG)

Cable glands

Cable diameter:
- Plastic: Ø5 to 10 mm (0.2 to 0.38 in)
- Nickel-plated brass: Ø7 to 10.5 mm (0.28 to 0.41 in)
- Stainless steel: Ø7 to 12 mm (0.28 to 0.47 in)

Temperature spacer, pressure-tight feedthrough (optional)

Temperature spacer:
- For bypassing any existing vessel insulation. Reduces the ambient temperature at the housing due to the additional distance to the process.
- Maximum temperature: ≤ 150 °C (300 °F)
- Product Configurator, order code for "Sensor design"

Pressure-tight feedthrough (second line of defense) incl. temperature spacer:
- Pressure-tight glass feedthrough sealed with an O-ring. Recommended if there is a risk of damage to the sensor, particularly in the case of dangerous media or where there is medium to high probability of condensate.
- Maximum temperature: ≤ 150 °C (300 °F)
- Product Configurator, order code for "Sensor design"

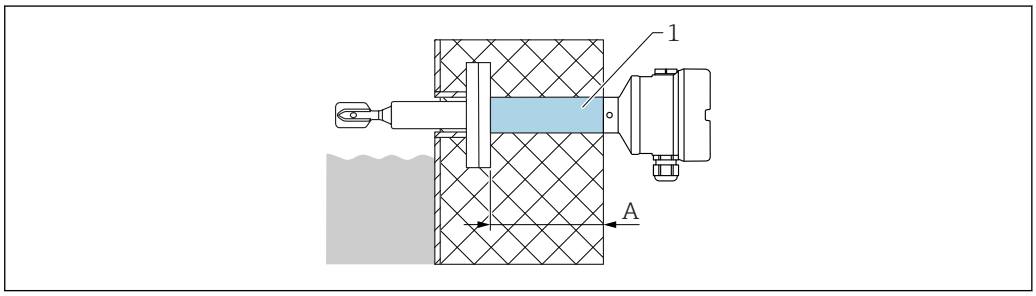

A0042231

1 Temperature spacer up to 150 °C (300 °F) (with pressure-tight feedthrough as an option) with maximum insulation length
A 140 mm (5.51 in)

Dimension A depends on the process connection selected and can therefore vary. For exact dimensions, information is available from the Endress+Hauser sales office.

Gas-tight feedthrough:
- Welded diffusion resistant glass feedthrough. Recommended if there is a risk of damage to the sensor, in the case of dangerous or very dangerous media or where there is a very high probability of condensate.
- Maximum temperature: < 230 °C (450 °F) or 280 °C (540 °F)
- Product Configurator, order code for "Application"

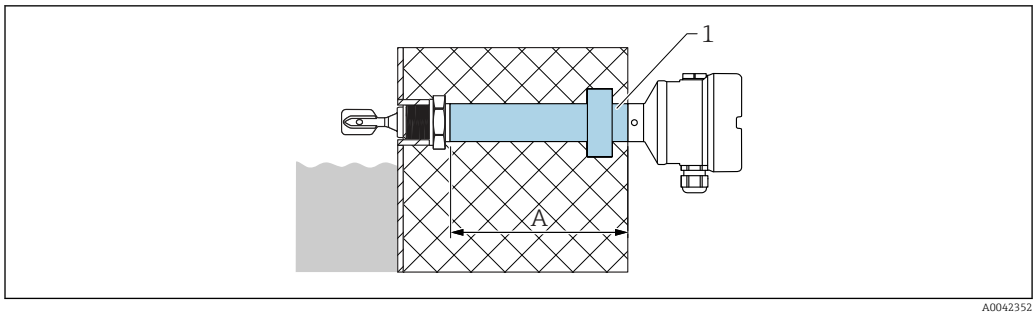

1 Temperature spacer with gas-tight glass feedthrough and maximum length of insulation
A 2 lengths available, depending on the process temperature: 163 mm (6.42 in) at 230 °C (450 °F) or 203 mm (7.99 in) at 280 °C (540 °F)

Dimension A depends on the process connection selected and can therefore vary. For exact dimensions, information is available from the Endress+Hauser sales office.

Sensor lengths

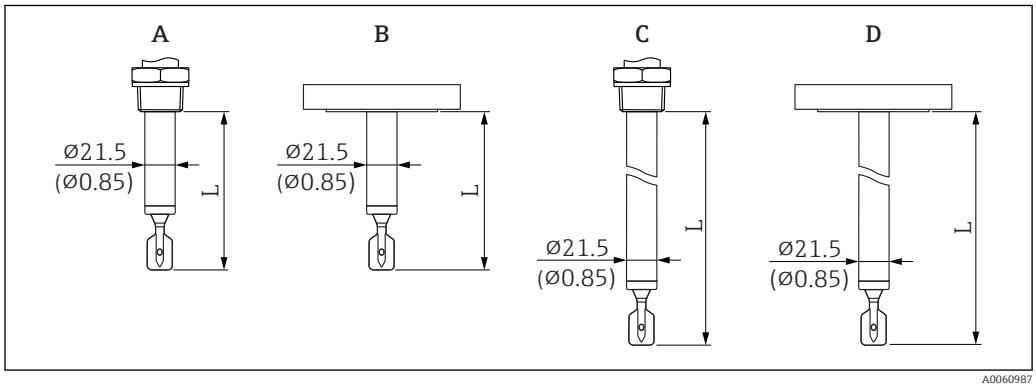

33 Sensor length L. Unit of measurement mm (in)

A Short pipe version with thread (L = depends on thread)
B Short pipe version with flange (L = 115 mm (4.53 in)
C Pipe extension with thread (L = variable 148 to 3 000 mm (6 to 115 in)
D Pipe extension with flange (L = variable 148 to 3 000 mm (6 to 115 in)
L Sensor length

Sensor lengths, short pipe version with thread (A):
- G ¾ thread: 115 mm (4.53 in) to sealing surface
- G 1 thread: 118 mm (4.65 in) to sealing surface
- G 1 thread for flush mount installation: 104 mm (4.09 in) to sealing surface
- R ¾, NPT ¾ thread: 99 mm (3.9 in) to lower edge of thread
- R 1, NPT 1 thread: 99 mm (3.9 in) to lower edge of thread

Tuning fork

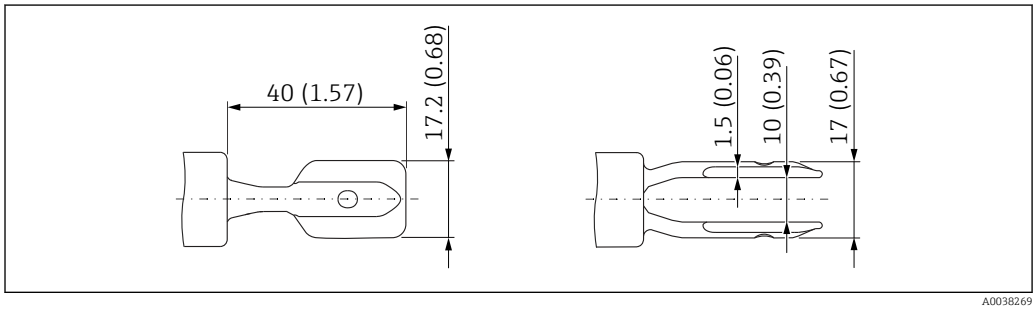

34 Tuning fork. Unit of measurement mm (in)

Weight **Housing**

- Plastic (F16): 0.1 kg (0.22 lb)
- Aluminum (F13): 0.5 kg (1.1 lb)
- 316L (F15): 0.2 kg (0.44 lb)
- Aluminum (F17): 0.5 kg (1.1 lb)
- 316L (F27): 1.3 kg (2.87 lb)
- Aluminum with separate terminal compartment (T13): 0.9 kg (1.98 lb)

Temperature spacer
0.6 kg (1.32 lb)

Pressure-tight feedthrough
0.7 kg (1.54 lb)

Gas-tight feedthrough
0.5 kg (1.10 lb)

Pipe extension
- 1000 mm: 0.9 kg (1.98 lb)
- 50 in: 1.15 kg (2.54 lb)

Process connection thread
- Thread ISO 228 G ¾: 0.2 kg (0.44 lb)
- Thread ISO 228 G 1: 0.33 kg (0.73 lb)
- Thread ASME B1.20.1, NPT ¾: 0.23 kg (0.51 lb)
- Thread ASME B1.20.1, NPT 1: 0.33 kg (0.73 lb)
- Thread EN 10226, R ¾: 0.23 kg (0.51 lb)
- Thread EN 10226, R 1: 0.33 kg (0.73 lb)

Flange process connection, see "Process connections" section

Protective cover, plastic
0.3 kg (0.66 lb)

Materials

Materials in contact with process

Process connection and pipe extension

- 316L (1.4435)
- Optional: Alloy C22 (2.4602)

Vibrating fork

- Standard version:
  - 316L (1.4435)
  - Optional: Alloy C22 (2.4602)
- High-temperature version:
  - 318L (1.4462)
  - Optional: Alloy C22 (2.4602)

Flanges

- 316L (1.4435 or 1.4404)
- Flange plating: Alloy C22 (2.4602)
  - Standard version carrier material 316L (1.4435 or 1.4404)
  - High-temperature version carrier material 318L (1.4462)

Seals

Flat seal for process connection G ¾ or G 1: fiber-reinforced elastomer seal, asbestos-free according to DIN 7603

Scope of delivery without seal
- Flanges
- R and NPT thread

Materials not in contact with process

- Seal between process connection and housing: EPDM
- Temperature spacer:
  - Standard version: 316L (1.4435)
  - Plated high-temperature version: 318L
- Pressure-tight feedthrough: 316L (1.4435)
- Ground terminals on housing (exterior): 304 (1.4301)

Housing

Plastic housing F16:
- Housing: PBT-FR
- Cover: PBT-FR
- Transparent cover: PA12
- Cover seal: EPDM
- Glued nameplate: plastic film (PET)
- Pressure compensation filter: PBT-GF20

Stainless steel housing F15:
- Housing: 316L (1.4404)
- Cover seal: silicone/PTFE
- Cover clamp: 304 (1.4301)
- Pressure compensation filter: PBT-GF20, PA
- Nameplate labeling: directly on housing

Aluminum housing F17/F13:
- Housing: EN-AC-AlSi10Mg, plastic-coated
- Cover seal: EPDM
- Cover clamp: nickel-plated brass
- Pressure compensation filter: silicone
- Nameplate on housing (exterior): 304 (1.4301)

Stainless steel housing F27:
- Housing: 316L
- Cover seal: FVMQ (optional: EPDM seal available as spare part)
- Cover clamp: 316L
- Nameplate on housing (exterior): 304 (1.4301)

Aluminum housing T13:
- Housing: EN-AC-AlSi10Mg, plastic-coated
- Cover seal: EPDM
- Cover clamp: nickel-plated brass
- Nameplate on housing (exterior): 304 (1.4301)

Electrical connection

Cable gland versions:
- Coupling M20, plastic (PA)
- Coupling M20, nickel-plated brass
- Coupling M20, 316L (1.4435)
- M12 connector, nickel-plated brass

Process connections

Process connection, sealing surface

- Thread ISO 228, G
- Thread ASME B1.20.1, NPT
- Thread EN 10226, R
- Flange ASME B16.5, RF (Raised Face)
- Flange EN1092-1, Form A
- Flange EN1092-1, Form B1
- Flange EN1092-1, Form C
- Flange EN1092-1, Form D
- Flange EN1092-1, Form B2
- Flange JIS B2220, RF (Raised Face)

Height of process connection

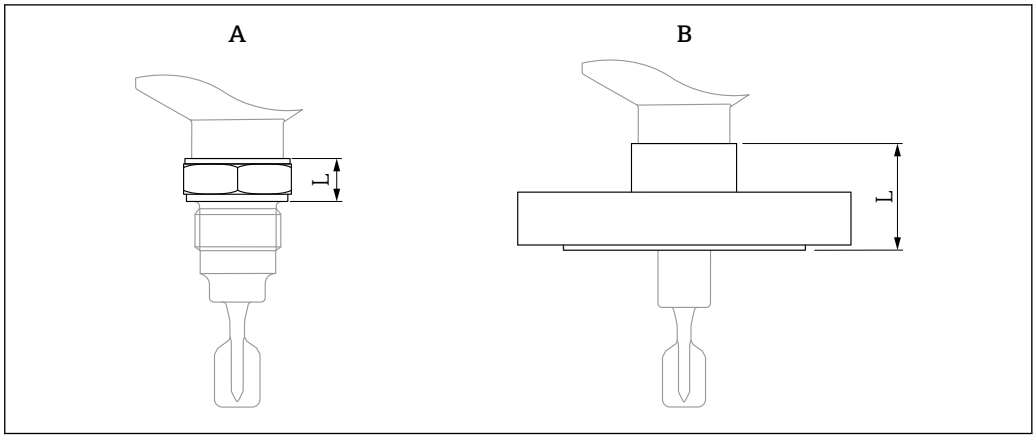

35 *Maximum height specification for the process connections. Unit of measurement mm (in)*

A Process connection with threaded connection (L = max. 41 mm (1.61 in)
B Process connection with flange (L = max. 64 mm (2.52 in)

Thread ISO 228 G with flat seal

G ¾, G 1
- Pressure rating: ≤ 100 bar (1 450 psi)
- Temperature: ≤ 280 °C (536 °F)
- G ¾: AF32
- G 1: AF41

Thread ISO 228 G for installing in weld-in adapter

G 1 suitable for installation in weld-in adapter
- Pressure rating, temperature: ≤ 40 bar (580 psi), ≤ 100 °C (212 °F)
- Pressure rating, temperature: ≤ 25 bar (363 psi), ≤ 150 °C (302 °F)
- AF41
- Accessory: weld-in adapter

The weld-in adapter is not included in the scope of delivery.

Thread ASME B1.20.3, MNPT

MNPT ¾, MNPT 1
- Pressure rating: ≤ 100 bar (1 450 psi)
- Temperature: ≤ 280 °C (536 °F)
- MNPT ¾: AF32
- MNPT 1: AF41

Thread EN 10226, R

R ¾, R 1
- Pressure rating: ≤ 100 bar (1 450 psi)
- Temperature: ≤ 280 °C (536 °F)
- R ¾: AF32
- R 1: AF41

Flanges

AlloyC22-plated flanges are available for higher chemical resistance. The flange carrier material is made of 316L and is welded to an Alloy C22 disk.

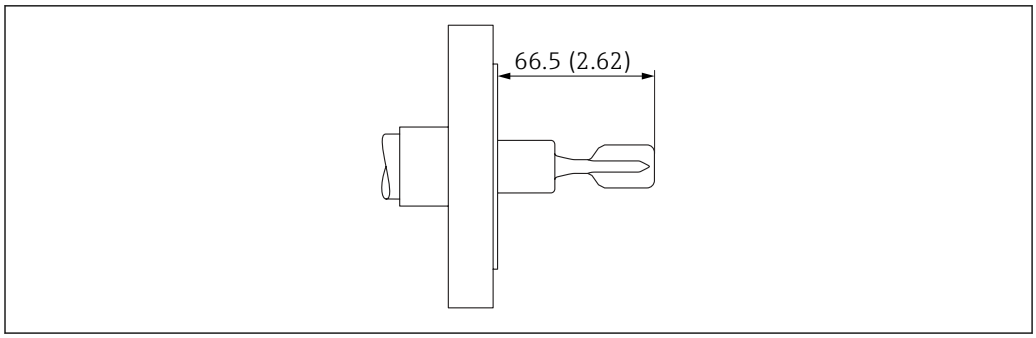

36 *Sample illustration. Unit of measurement mm (in)*

The raised face is smaller than described in the standard. However, a standard seal can be used.

In the event of high temperatures: pay attention to the pressure loading capacity of the flange depending on the temperature!

ASME B16.5 flanges, RF

Pressure rating	Type	Material	Weight
Cl.150	NPS 1"	316/316L	1.0 kg (2.21 lb)
Cl.150	NPS 1½"	316/316L	1.5 kg (3.31 lb)
Cl.150	NPS 2"	316/316L	2.4 kg (5.29 lb)
Cl.150	NPS 2"	Alloy C22>1.4462	2.4 kg (5.29 lb)
Cl.150	NPS 3"	316/316L	4.9 kg (10.8 lb)
Cl.150	NPS 4"	316/316L	7.0 kg (15.44 lb)
Cl.300	NPS 1½"	316/316L	2.7 kg (5.95 lb)
Cl.300	NPS 2"	316/316L	3.2 kg (7.06 lb)
Cl.300	NPS 2"	Alloy C22>1.4462	3.2 kg (7.06 lb)
Cl.300	NPS 3"	316/316L	6.8 kg (14.99 lb)
Cl.300	NPS 3"	Alloy C22>1.4462	6.8 kg (14.99 lb)
Cl.300	NPS 4"	316/316L	11.5 kg (25.6 lb)
Cl.300	NPS 4"	Alloy C22>1.4462	11.5 kg (25.6 lb)
Cl.600	NPS 2"	316/316L	4.2 kg (9.26 lb)
Cl.600	NPS 2"	Alloy C22>1.4462	4.2 kg (9.26 lb)

EN flanges EN 1092-1, A

Pressure rating	Type	Material	Weight
PN6	DN32	316L (1.4404)	1.2 kg (2.65 lb)
PN6	DN40	316L (1.4404)	1.4 kg (3.09 lb)
PN6	DN50	316L (1.4404)	1.6 kg (3.53 lb)
PN10/16	DN80	316L (1.4404)	4.8 kg (10.58 lb)
PN10/16	DN100	316L (1.4404)	5.6 kg (12.35 lb)
PN25/40	DN25	316L (1.4404)	1.3 kg (2.87 lb)
PN25/40	DN32	316L (1.4404)	2.0 kg (4.41 lb)
PN25/40	DN40	316L (1.4404)	2.4 kg (5.29 lb)
PN25/40	DN50	316L (1.4404)	3.2 kg (7.06 lb)

Pressure rating	Type	Material	Weight
PN25/40	DN65	316L (1.4404)	4.3 kg (9.48 lb)
PN25/40	DN80	316L (1.4404)	5.9 kg (13.01 lb)
PN25/40	DN100	316L (1.4404)	7.5 kg (16.54 lb)

EN flanges EN 1092-1, B1

Pressure rating	Type	Material	Weight
PN6	DN50	316L (1.4404)	1.6 kg (3.53 lb)
PN6	DN50	Alloy C22>1.4462	1.6 kg (3.53 lb)
PN10/16	DN100	316L (1.4404)	5.6 kg (12.35 lb)
PN10/16	DN100	Alloy C22>1.4462	5.6 kg (12.35 lb)
PN25/40	DN25	316L (1.4404)	1.4 kg (3.09 lb)
PN25/40	DN25	Alloy C22>1.4462	1.4 kg (3.09 lb)
PN25/40	DN50	316L (1.4404)	3.2 kg (7.06 lb)
PN25/40	DN50	Alloy C22>1.4462	3.2 kg (7.06 lb)
PN25/40	DN80	316L (1.4404)	5.9 kg (13.01 lb)
PN25/40	DN80	Alloy C22>316L	5.2 kg (11.47 lb)

EN flanges EN 1092-1, C

Pressure rating	Type	Material	Weight
PN25/40	DN50	316L (1.4404)	3.2 kg (7.06 lb)

EN flanges EN 1092-1, D

Pressure rating	Type	Material	Weight
PN25/40	DN50	316L (1.4404)	3.2 kg (7.06 lb)

EN flanges EN 1092-1, B2

Pressure rating	Type	Material	Weight
PN100	DN50	316L (1.4404)	4.4 kg (9.70 lb)

JIS flanges B2220, RF

Pressure rating	Type	Material	Weight
10K	25A	316L (1.4404)	1.3 kg (2.87 lb)
10K	40A	316L (1.4404)	1.5 kg (3.31 lb)
10K	50A	316L (1.4404)	1.7 kg (3.75 lb)
10K	50A	Alloy C22>1.4462	1.7 kg (3.75 lb)
10K	80A	316L (1.4404)	2.2 kg (4.85 lb)
10K	100A	316L (1.4404)	2.8 kg (6.17 lb)
20K	50A	316L (1.4404)	1.9 kg (4.19 lb)
20K	50A	Alloy C22>1.4462	1.9 kg (4.19 lb)

Operability

Operation concept

- Operation with button and rotary switches on the electronic insert
- Configuration of minimum or maximum detection via connection wiring
- Density range adjustment via two rotary switches, confirmation via test button

Local operation

Elements on the electronic insert

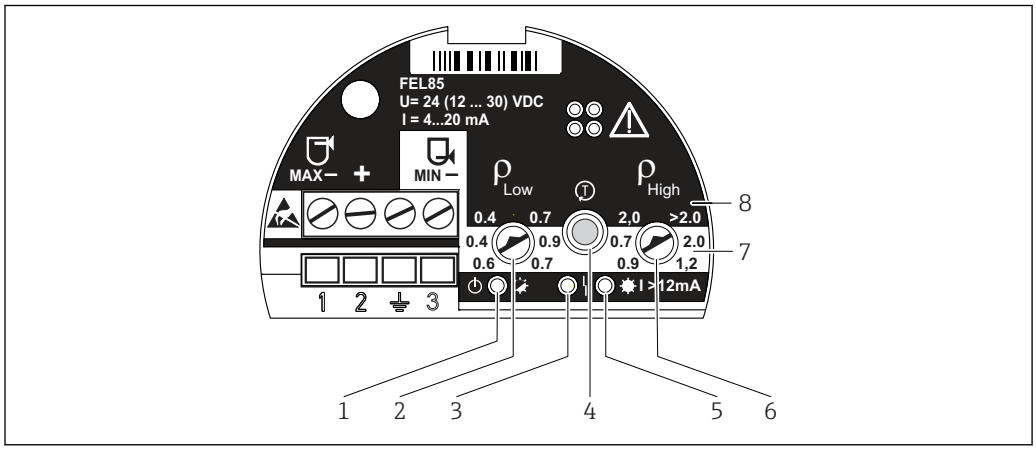

1 *Green LED, operation; initialization (lit), normal operation (flashes), fault (off or flashes alternately with red LED)*
2 *Density ρ_{Low} (rotary switch); Adjusts the lower density range limit*
3 *Red LED, fault; sensor error (lit permanently), operating error and electronic insert fault (flashing)*
4 *Test button; used to confirm configuration changes and activate proof testing*
5 *Yellow LED, current output; MAX (free) lit (13.5 mA), MIN (covered) lit (18.5 mA)*
6 *Density ρ_{High} (rotary switch); Adjusts the upper density range limit*
7 *MIN; white background indicates the adjustable density range in minimum detection mode*
8 *MAX; black background indicates the adjustable density range in maximum detection mode*

Certificates and approvals

Current certificates and approvals for the product are available at www.endress.com on the relevant product page:

1. Select the product using the filters and search field.
2. Open the product page.
3. Select **Downloads**.

CE mark

The measuring system meets the legal requirements of the applicable EU Directives. These are listed in the corresponding EU Declaration of Conformity together with the standards applied. Endress +Hauser confirms successful testing of the device by affixing to it the CE mark.

Ex approval

All data relating to explosion protection is provided in separate Ex documentation and is available from the Downloads area. The Ex documentation is supplied as standard with all devices approved for use in explosion hazardous areas.

Overfill protection system

Before mounting the device, observe the documentation from the WHG approvals (German Federal Water Act).

Approved for overfill protection systems and leakage detection.

Product Configurator: feature "Additional approval"

Functional safety

The device has been developed according to the IEC 61508 standard. The device can be used for overfill protection systems and dry-run protection up to SIL 3. A detailed description of the safety

functions with the device, settings and functional safety data are provided in the "Functional Safety Manual" on the Endress+Hauser website: www.endress.com → Downloads.

Product Configurator: order code for "Additional approval"

Subsequent confirmation of usability according to IEC 61508 is not possible.

Marine approvals

Product Configurator: feature "Additional approval"

CRN approval

Device versions with a CRN approval (Canadian Registration Number) are listed in the corresponding registration documents. CRN-approved devices are marked with a registration number.

Any restrictions regarding the maximum process pressure values are listed on the CRN certificate.

Product Configurator: feature "Additional approval"

Pressure equipment with permitted pressure less than 200 bar, no pressure-bearing volume

Pressure instruments with a process connection that does not have a pressurized housing do not fall within the scope of the Pressure Equipment Directive, irrespective of the maximum working pressure.

If pressure equipment does not have a pressure-bearing housing, there is no pressure accessory present within the meaning of the Directive.

Druckgeräterichtlinie DGRL (PED) 2014/68/EU, Artikel 2, Absatz 5

Process seal as per ANSI/ISA 12.27.01

North American practice for the installation of process seals.

In accordance with ANSI/ISA 12.27.01, Endress+Hauser devices are designed as either single seal or dual seal devices with a warning message. This allows the user to forego the use of - and save the cost of installing - an external secondary process seal in the mating pipe as required in ANSI/NFPA 70 (NEC) and CSA 22.1 (CEC).

These instruments comply with the North American installation practice and provide a very safe and cost-saving installation for pressurized applications with hazardous fluids.

Please refer to the Safety Instructions (XA) of the relevant device for further information.

Ordering information

Detailed ordering information is available from your nearest sales organization www.addresses.endress.com or in the Product Configurator at www.endress.com:

1. Select the product using the filters and search field.
2. Open the product page.
3. Select **Configuration**.

Product Configurator - the tool for individual product configuration

- Up-to-the-minute configuration data
- Depending on the device: direct input of information specific to the measuring point, such as the measuring range or operating language
- Automatic verification of exclusion criteria
- Automatic creation of the order code and its breakdown in PDF or Excel output format
- Ability to order directly in the Endress+Hauser Online Shop

Service

- PWIS-free (paint-wetting impairment substances)
  The plastic protective cover and weld-in adapters are excluded from the PWIS cleaning
- Product documentation on paper

Test, certificate, declaration

Versions can be selected for which the following certificates are available:

- 3.1 Material documentation, wetted metallic parts, EN10204-3.1 inspection certificate
- Declaration of Conformity NACE MR0175, wetted metallic parts
- Declaration of Conformity NACE MR0103, wetted metallic parts
- Conformity to AD2000, wetted metallic parts, except castings
- Helium leak test, internal procedure, inspection certificate

- Pressure test, internal procedure, inspection certificate
- PMI test (XRF), internal procedure, wetted metallic parts, inspection certificate
- Penetrant testing AD2000-HP5-3 (PT), wetted/pressurized seams, test report
- Penetrant testing ISO23277-1 (PT), wetted/pressurized seams, test report
- Penetrant testing ASME VIII-1 (PT), wetted/pressurized seams, test report
- Welding documentation, wetted/pressurized seams
- Declaration of Conformity ASME B31.3

Documentation currently available on the Endress+Hauser website: www.endress.com → Downloads or with the serial number of the device under Online Tools in the Device Viewer.

TAG

Measuring point (TAG)

The device can be ordered with a tag name.

Location of tag name
In the additional specification, select:
- Stainless steel tag plate
- Paper adhesive label
- TAG provided by the customer
- RFID tag
- RFID tag + stainless steel tag plate
- RFID tag + paper adhesive label
- RFID tag + tag provided by the customer
- IEC 61406 stainless steel tag
- IEC 61406 stainless steel tag + NFC tag
- IEC 61406 stainless steel tag, stainless steel tag
- IEC 61406 stainless steel tag + NFC, stainless steel tag
- IEC 61406 stainless steel tag, plate supplied
- IEC 61406 stainless steel tag + NFC, plate supplied

Definition of tag name
In the additional specification, specify:
Three lines of maximum 18 characters each
The specified tag name appears on the selected plate and/or on the RFID tag.

Accessories

The accessories currently available for the product can be selected at www.endress.com:

1. Select the product using the filters and search field.
2. Open the product page.
3. Select **Spare parts & Accessories**.

Weather protection cover PA6 (aluminum housing (F13, F17) and 316L (F27))

The weather protection cover can be ordered together with the device via the "Accessory enclosed" product structure.

It is used to protect against direct sunlight, precipitation and ice.

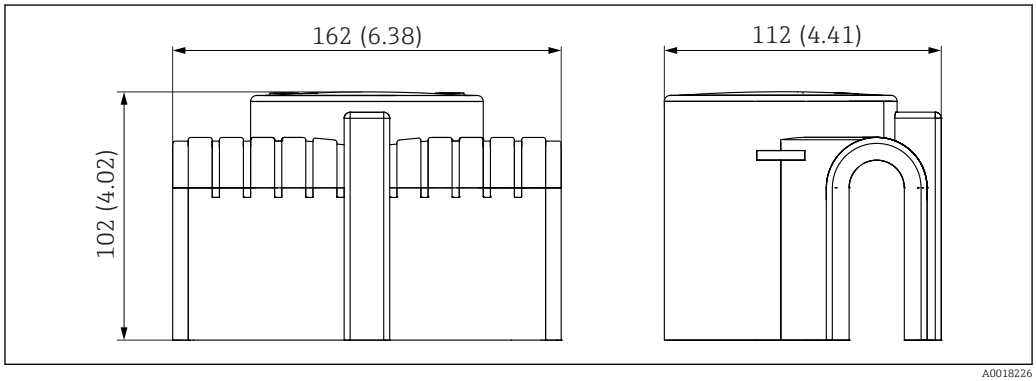

37 *Dimensions of weather protection cover PA6. Unit of measurement mm (in)*

- Order No. 71040497
- Material: PA6, gray
- Weight: 0.3 kg (0.66 lb)

Weather protection cover PBT (plastic housing (F16))

The weather protection cover is used to protect against direct sunlight, precipitation and ice.

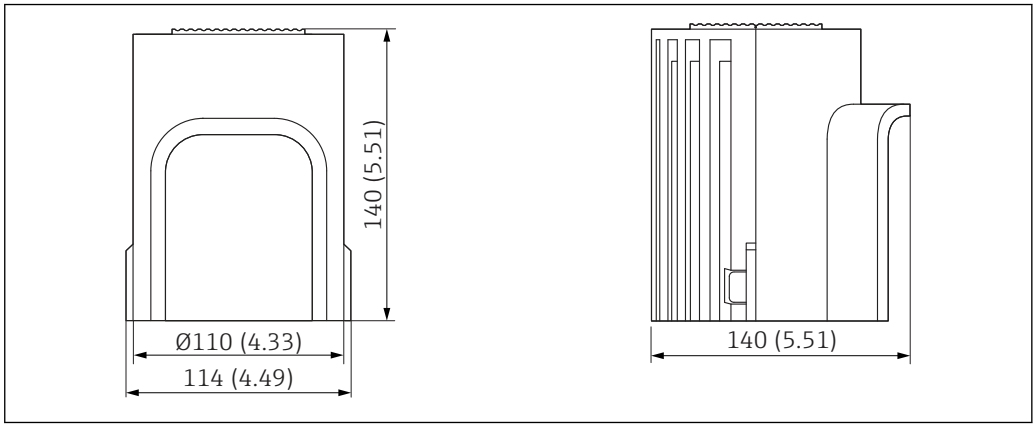

38 *Dimensions of weather protection cover PBT. Unit of measurement mm (in)*

- Order No. 71127760
- Material: PBT, gray
- Weight: 0.24 kg (0.53 lb)

Weld-in adapter

Various weld-in adapters are available for installation in vessels or pipes. The adapters are optionally available with inspection certificate 3.1 EN 10204.

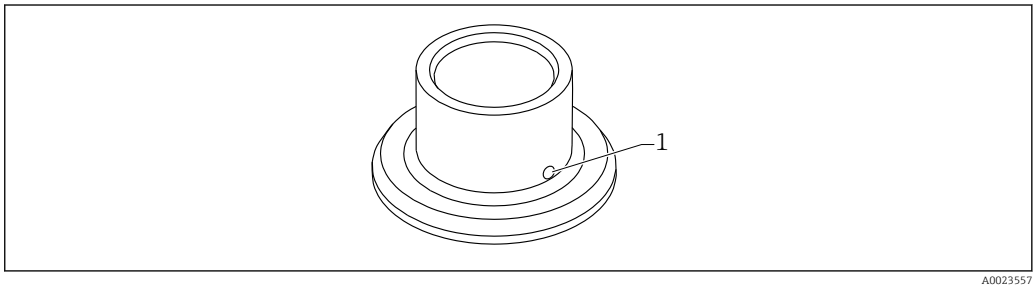

39 *Weld-in adapter (sample view)*

1 Leakage hole

Weld in the weld-in adapter in such a way that the leakage hole is pointing downwards. This enables any leaks to be detected quickly.

- G 1, Ø53 mounting on the pipe
- G 1, Ø60 flush mount on the vessel
- G 1 sensor adjustable

For detailed information, see "Technical Information" TI00426F (Weld-in adapters, process adapters and flanges)

Available in the Downloads area of the Endress+Hauser website (www.endress.com/downloads).

M12 socket

The M12 sockets listed are suitable for use in the temperature range −25 to +70 °C (−13 to +158 °F).

M12 socket IP69
- Terminated at one end
- Angled
- 5 m (16 ft) PVC cable (orange)

- Slotted nut 316L (1.4435)
- Body: PVC
- Order number: 52024216

M12 socket IP67
- Angled
- 5 m (16 ft) PVC cable (gray)
- Slotted nut Cu Sn/Ni
- Body: PUR
- Order number: 52010285

Sliding sleeves for unpressurized operation

Not suitable for use in explosive atmospheres.

Switch point, infinitely adjustable.

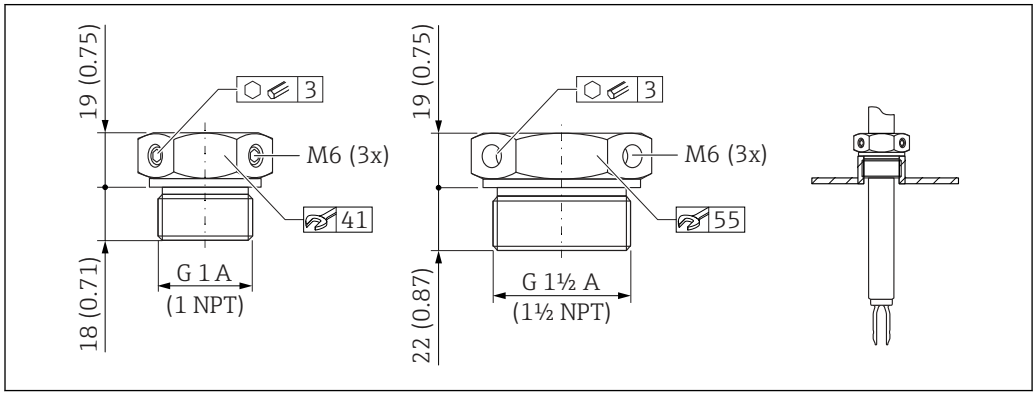

40 *Sliding sleeves for unpressurized operation p_e = 0 bar (0 psi). Unit of measurement mm (in)*

G 1, DIN ISO 228/I
- Material: 1.4435 (AISI 316L)
- Weight: 0.21 kg (0.46 lb)
- Order number: 52003978
- Order number: 52011888, approval: with inspection certificate EN 10204 - 3.1 material

NPT 1, ASME B 1.20.1
- Material: 1.4435 (AISI 316L)
- Weight: 0.21 kg (0.46 lb)
- Order number: 52003979
- Order number: 52011889, approval: with inspection certificate EN 10204 - 3.1 material

G 1½, DIN ISO 228/I
- Material: 1.4435 (AISI 316L)
- Weight: 0.54 kg (1.19 lb)
- Order number: 52003980
- Order number: 52011890, approval: with inspection certificate EN 10204 - 3.1 material

NPT 1½, ASME B 1.20.1
- Material: 1.4435 (AISI 316L)
- Weight: 0.54 kg (1.19 lb)
- Order number: 52003981
- Order number: 52011891, approval: with inspection certificate EN 10204 - 3.1 material

More detailed information and documentation are available:
- Product Configurator on the Endress+Hauser website www.endress.com
- Endress+Hauser Sales Organizationwww.addresses.endress.com

High pressure sliding sleeves

Suitable for use in explosive atmospheres.

- Switch point, infinitely adjustable
- Seal package made of graphite
- Graphite seal available as spare part 71078875
- For G 1, G 1½: seal is included in the delivery

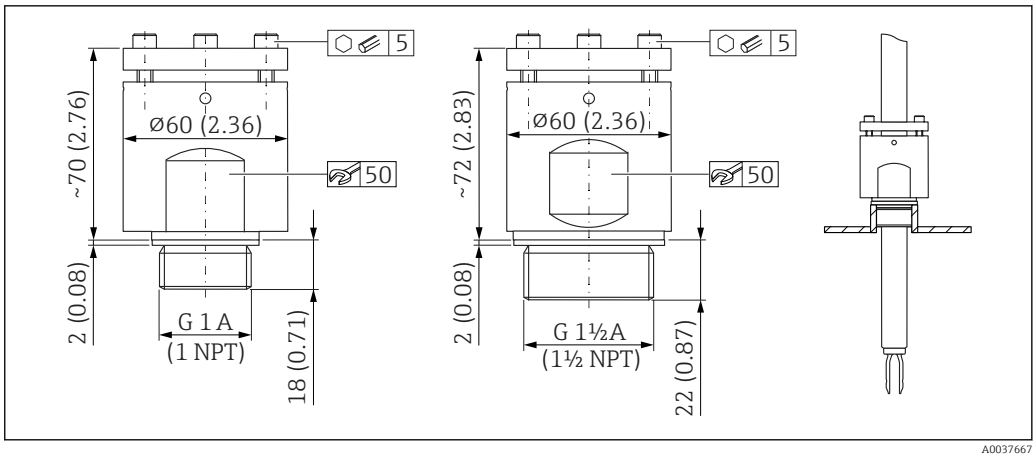

41 *High pressure sliding sleeves. Unit of measurement mm (in)*

G 1, DIN ISO 228/I
- Material: 1.4435 (AISI 316L)
- Weight: 1.13 kg (2.49 lb)
- Order number: 52003663
- Order number: 52011880, approval: with inspection certificate EN 10204 - 3.1 material

G 1, DIN ISO 228/I
- Material: AlloyC22
- Weight: 1.13 kg (2.49 lb)
- Approval: with inspection certificate EN 10204 - 3.1 material
- Order number: 71118691

NPT 1, ASME B 1.20.1
- Material: 1.4435 (AISI 316L)
- Weight: 1.13 kg (2.49 lb)
- Order number: 52003667
- Order number: 52011881, approval: with inspection certificate EN 10204 - 3.1 material

NPT 1, ASME B 1.20.1
- Material: AlloyC22
- Weight: 1.13 kg (2.49 lb)
- Approval: with inspection certificate EN 10204 - 3.1 material
- Order number: 71118694

G 1½, DIN ISO 228/1
- Material: 1.4435 (AISI 316L)
- Weight: 1.32 kg (2.91 lb)
- Order number: 52003665
- Order number: 52011882, approval: with inspection certificate EN 10204 - 3.1 material

G 1½, DIN ISO 228/1
- Material: AlloyC22
- Weight: 1.32 kg (2.91 lb)
- Approval: with inspection certificate EN 10204 - 3.1 material
- Order number: 71118693

NPT 1½, ASME B 1.20.1
- Material: 1.4435 (AISI 316L)
- Weight: 1.32 kg (2.91 lb)
- Order number: 52003669
- Order number: 52011883, approval: with inspection certificate EN 10204 - 3.1 material

NPT 1½, ASME B 1.20.1
- Material: AlloyC22
- Weight: 1.32 kg (2.91 lb)
- Approval: with inspection certificate EN 10204 - 3.1 material
- Order number: 71118695

More detailed information and documentation are available:
- Product Configurator on the Endress+Hauser website www.endress.com
- Endress+Hauser sales organization www.addresses.endress.com

Documentation

For an overview of the scope of the associated Technical Documentation, refer to the following:
- *Device Viewer* (www.endress.com/deviceviewer): Enter the serial number from the nameplate
- *Endress+Hauser Operations app*: Enter serial number from nameplate or scan matrix code on nameplate.

Standard documentation

Document type: Operating Instructions (BA)
Installation and initial commissioning – contains all the functions in the operating menu that are needed for a routine measuring task. Functions beyond this scope are not included.

Document type: Brief Operating Instructions (KA)
Quick guide to the first measured value – includes all essential information from incoming acceptance to electrical connection.

Document type: Safety Instructions, certificates
Depending on the approval, safety instructions are supplied with the device, e.g. XA. This documentation is an integral part of the Operating Instructions.
The nameplate indicates which Safety Instructions (XA) apply to the device.

Supplementary device-dependent documentation

Additional documents are supplied depending on the device version ordered: Always comply strictly with the instructions in the supplementary documentation. The supplementary documentation is an integral part of the device documentation.

Special Documentation

- FY01078F: Functional Safety Manual FTL81 with FTL825
- BA01038F: Nivotester FailSafe FTL825 (Operating Instructions)
- TI01027F: Nivotester FailSafe FTL825 (Technical Information)
- SD02398F: Sliding sleeve for Liquiphant (installation instructions)
- SD01622P: Weld-in adapter (installation instructions)
- TI00426F: Weld-in adapters, process adapters and flanges (overview)

71755803

www.addresses.endress.com