Level Pressure Flow Temperature Liquid Analysis Registration Systems Components Services Solutions

Operating Instructions

Prosonic M FMU40/41/42/43/44

Ultrasonic Level Measurement

PROFIBUS®

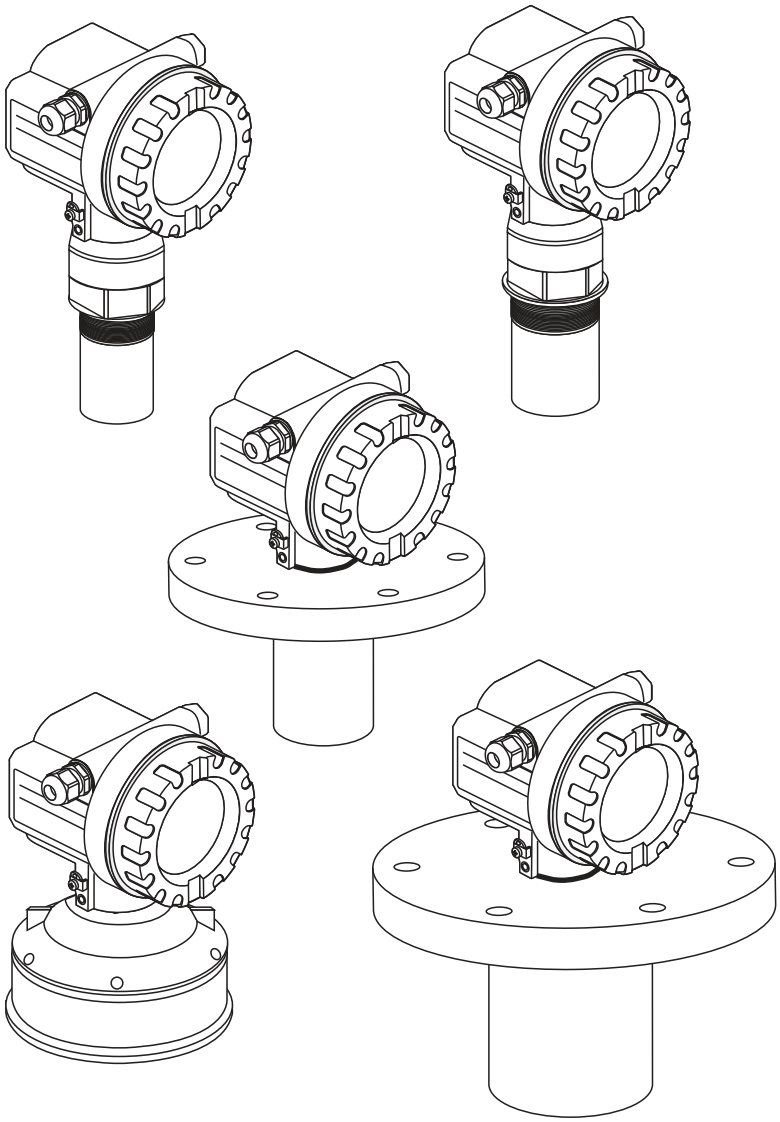

BA00238F/00/EN/13.12
71164389

Valid as of software version:
V 01.02.00 (amplifier)
V 01.02.00 (communication)

Endress+Hauser

People for Process Automation

Brief operating instructions

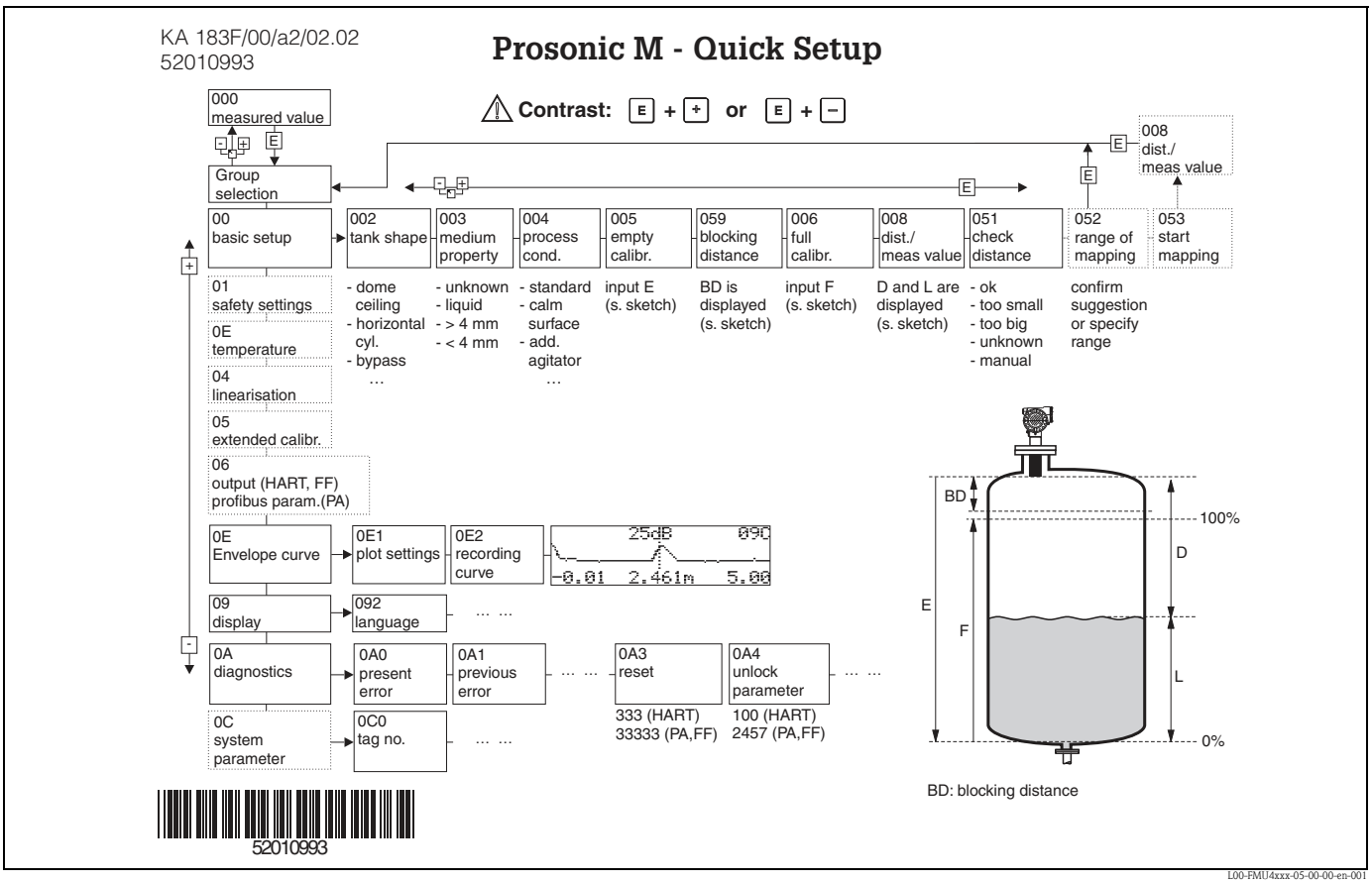

Contents of the operating instructions

This operating instructions describes the installation and commissioning of the Prosonic M ultrasonic level transmitter. It contains all the functions required for a normal measuring operation. Also, the Prosonic M provides additional functions for optimising the measuring point and for converting the measured value. These functions are not included in this operating instructions.

You can find an **overview of all the device functions** in the Appendix.

You can find a **detailed description of all the device functions** in the operating instructions BA00240F/00/EN "Prosonic M – Description of Instrument Functions". This is located on the supplied documentation CD-ROM.

Table of contents

1 Safety instructions 4

1.1 Designated use 4
1.2 Installation, commissioning, operation 4
1.3 Operational safety and process safety 4
1.4 Notes on safety conventions and symbols 5

2 Identification 6

2.1 Nameplate 6
2.2 Product structure FMU40 7
2.3 Product structure FMU41 9
2.4 Product structure FMU42 10
2.5 Product structure FMU43 12
2.6 Product structure FMU44 13
2.7 Scope of delivery 15
2.8 Certificates and approvals 15
2.9 Registered trademarks 15

3 Installation 16

3.1 Design; dimensions 16
3.2 Installation variants 19
3.3 Installation conditions 21
3.4 Measuring range 24
3.5 Installation hint for FMU40, FMU41 25
3.6 Turn housing 26
3.7 Installation check 26

4 Wiring 27

4.1 Electrical connection 27
4.2 Terminal assignment 29
4.3 Cable specifications PROFIBUS 29
4.4 Supply voltage 29
4.5 Recommended connection 30
4.6 Checking the connection 30

5 Operation 31

5.1 Display and operating elements 31
5.2 Function codes 33
5.3 PROFIBUS PA communication 34
5.4 Operation using the on-site display VU331 48
5.5 Lock/unlock configuration 49
5.6 Resetting the customer parameters 49
5.7 Resetting an interference echo suppression (tank map) 50

6 Commissioning 51

6.1 Function check 51
6.2 Power up instrument 51
6.3 Basic calibration 52
6.4 Envelope curve 58

7 Troubleshooting 61

7.1 System error messages 61
7.2 Application errors 63

8 Maintenance and repairs 65

8.1 Exterior cleaning 65
8.2 Repairs 65
8.3 Repairs to Ex-approved devices 65
8.4 Replacement 65
8.5 Spare Parts 66
8.6 Return 67
8.7 Disposal 67
8.8 Software history 67
8.9 Contact addresses of Endress+Hauser 67

9 Accessories 68

9.1 Weather protection cover 68
9.2 Installation bracket for FMU40, FMU41 68
9.3 Screw in flange 69
9.4 Cantilever 70
9.5 Mounting Frame 71
9.6 Wall Bracket 71
9.7 Mounting bracket for FMU42, FMU43, FMU44 . . . 72
9.8 Commubox FXA195 HART 72
9.9 Commubox FXA291 72
9.10 ToF Adapter FXA291 72
9.11 Remote display FHX40 73

10 Technical Data 75

10.1 Technical data at a glance 75

11 Appendix 78

11.1 Operating menu 78
11.2 Measuring principle 80

Index 82

1 Safety instructions

1.1 Designated use

The Prosonic M is a compact measuring device for continuous, non-contact level measurement. Depending on the sensor, the measuring range is up to 15 m (49 ft) in fluids and up to 7 m (23 ft) in bulk solids. By using the linearisation function, the Prosonic M can also be used for flow measurements in open channels and measuring weirs.

1.2 Installation, commissioning, operation

The Prosonic M is fail-safe and is constructed to the state-of-the-art. It meets the appropriate standards and EC directives. However, if you use it improperly or other than for its designated use, it may pose application-specific hazards, e.g. product overflow due to incorrect installation or configuration. Installation, electrical connection, start-up, operation and maintenance of the measuring device must therefore be carried out exclusively by trained specialists authorised by the system operator. Technical personnel must have read and understood these operating instructions and must adhere to them. You may only undertake modifications or repair work to the device when it is expressly permitted by the operating instructions.

1.3 Operational safety and process safety

Alternative monitoring measures must be taken to ensure operational safety and process safety during configuration, testing and maintenance work on the device.

Hazardous areas

Measuring systems for use in hazardous environments are accompanied by separate "Ex documentation", which is an integral part of this Operating Manual. Strict compliance with the installation instructions and ratings as stated in this Additional documentation is mandatory.

- Ensure that all personnel are suitably qualified.
- Observe the specifications in the certificate as well as national and local regulations.

1.4 Notes on safety conventions and symbols

In order to highlight safety-relevant or alternative operating procedures in the manual, the following conventions have been used, each indicated by a corresponding symbol in the margin.

Safety conventions	
	**Warning!** A warning highlights actions or procedures which, if not performed correctly, will lead to personal injury, a safety hazard or destruction of the instrument
	**Caution!** Caution highlights actions or procedures which, if not performed correctly, may lead to personal injury or incorrect functioning of the instrument
	**Note!** A note highlights actions or procedures which, if not performed correctly, may indirectly affect operation or may lead to an instrument response which is not planned
Explosion protection	
	**Device certified for use in explosion hazardous area** If the device has this symbol embossed on its name plate it can be installed in an explosion hazardous area
	**Explosion hazardous area** Symbol used in drawings to indicate explosion hazardous areas. Devices located in and wiring entering areas with the designation “explosion hazardous areas” must conform with the stated type of protection.
	**Safe area (non-explosion hazardous area)** Symbol used in drawings to indicate, if necessary, non-explosion hazardous areas. Devices located in safe areas still require a certificate if their outputs run into explosion hazardous areas
Electrical symbols	
	**Direct voltage** A terminal to which or from which a direct current or voltage may be applied or supplied
	Alternating voltage A terminal to which or from which an alternating (sine-wave) current or voltage may be applied or supplied
	**Grounded terminal** A grounded terminal, which as far as the operator is concerned, is already grounded by means of an earth grounding system
	**Protective grounding (earth) terminal** A terminal which must be connected to earth ground prior to making any other connection to the equipment
	**Equipotential connection (earth bonding)** A connection made to the plant grounding system which may be of type e.g. neutral star or equipotential line according to national or company practice
	**Temperature resistance of the connection cables** States, that the connection cables must be resistant to a temperature of at least 85 °C.

2 Identification

2.1 Nameplate

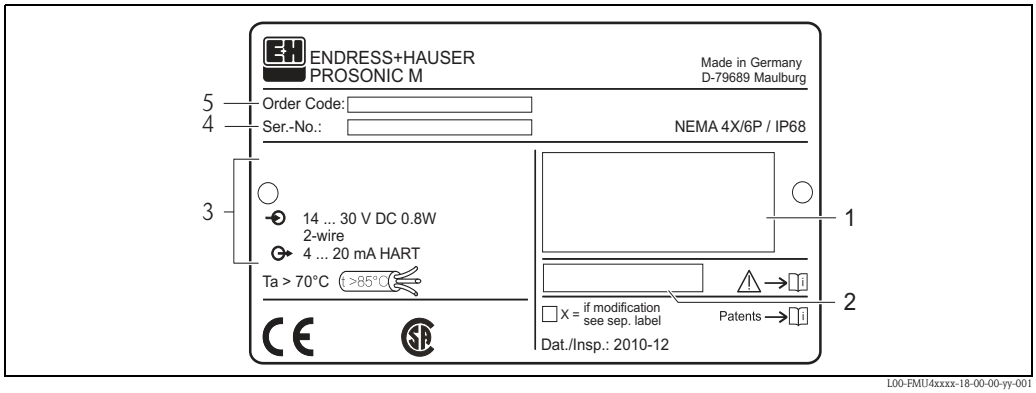

1 Designation according to Directive 94/9/EC and designation of the type of protection (only for certified device variants)
2 Reference to additional safety-relevant documentation (only for certified device variants)
3 Communication variant and supply voltage
4 Serial number
5 Order Code

2.2 Product structure FMU40

This overview does not mark options which are mutually exclusive.

010	**Certificates**	
	A	Variant for non-hazardous area
	E	NEPSI Ex nA II T6
	G	ATEX II 3G Ex nA IIC T6
	I	NEPSI Ex ia IIC T6
	J	NEPSI Ex d(ia) IIC T6
	K	TIIS EEx ia II C T6
	N	CSA General Purpose
	Q	NEPSI DIP
	S	FM IS Cl. I,II,III Div. 1 Gr. A-G / NI Cl. I Div. 2
	T	FM XP Cl. I,II,III Div. 1 Gr. A-G
	U	CSA IS Cl. I,II,III Div. 1 Gr. A-G / NI Cl. I Div. 2
	V	CSA XP Cl. I,II,III Div. 1 Gr. A-G
	1	ATEX II 1/2G EEx ia IIC T6
	2	ATEX II 1/2D, Alu blind cover
	4	ATEX II 1/2G EEx d (ia) IIC T6
	5	ATEX II 1/3D
	6	ATEX II 3D Ex t IIIC T* °C Dc
	Y	Special certificate
020	**Process connection**	
	R	G 1½“ threadISO 228
	N	NPT 1½“ – 11,5 thread
	Y	Special version
030	**Power supply/communication**	
	B	2 wire, 4 to 20mA-loop/HART
	H	4 wire, 10,5 to 32VDC / 4-20mA HART
	G	4 wire, 90 to 253VAC / 4-20mA HART
	D	2 wire, PROFIBUS PA
	F	2 wire, FOUNDATION Fieldbus
	J	2-wire; 4-20mA HART, 5-point linearity protocol
	K	2-wire; PROFIBUS PA, 5-point linearity protocol
	L	2-wire; FOUNDATION Fieldbus, 5-point linearity protocol
	M	4-wire 90-250VAC; 4-20mA HART,5-point linearity protocol
	N	4-wire 10.5-32VDC;4-20mA HART,5-point linearity protocol
	Y	Special version
040	**Display / on-site operation**	
	1	Without LC display
	2	With LC display VU331 incl. on-site operation
	3	Prepared for remote display FHX 40
	9	Special version
050	**Housing**	
	A	Aluminium F12 housing coated to IP68 NEMA6P
	C	Aluminium T12 housing coated to IP68 NEMA6P; with separate terminal compartment
	D	Aluminium T12 housing coated to IP68 NEMA6P+OVP; with separate terminal compartment; with overvoltage protection
	9	Special version
060	**Screw union/entry**	
	2	M20x1.5 screw union
	3	G 1/2“ entry
	4	NPT 1/2“ entry
	5	M12 PROFIBUS-PA plug-in connector
	6	7/8" FF plug
	9	Special version

995							Marking	
							1	Tagging (TAG)
							2	Bus address
FMU40 –								Product designation

2.3 Product structure FMU41

010	**Certificates**								
	A	Variant for non-hazardous area							
	E	NEPSI Ex nA II T6							
	G	ATEX II 3G Ex nA IIC T6							
	I	NEPSI Ex ia IIC T6							
	J	NEPSI Ex d(Ia) IIC T6							
	K	TIIS EEx ia IIC T6							
	N	CSA General Purpose							
	Q	NEPSI DIP							
	S	FM IS Cl. I,II,III Div. 1 Gr. A-G / NI Cl.I Div.2, zone 0,1,2							
	T	FM XP Cl. I,II,III Div. 1 Gr. A-G /zone 1,2							
	U	CSA IS Cl. I,II,III Div. 1 Gr. A-G / NI Cl. I Div. 2, zone 0,1,2							
	V	CSA XP Cl. I,II,III Div. 1 Gr. A-G / zone 1,2							
	1	ATEX II 1/2G EEx ia IIC T6							
	2	ATEX II 1/2D, Alu blind cover							
	4	ATEX II 1/2G EEx d (ia) IIC T6							
	5	ATEX II 1/3D							
	6	ATEX II 3D Ex t IIIC T* °C Dc							
	Y	Special certificate							
020		**Process connection**							
	R	G 2“ threadISO 228							
	N	NPT 2“ - 11,5 thread							
	Y	Special version							
030			**Power supply/communication**						
		B	2 wire, 4 to 20mA-loop/HART						
		H	4 wire, 10,5 to 32VDC / 4-20mA HART						
		G	4 wire, 90 to 253VAC / 4-20mA HART						
		D	2 wire, PROFIBUS PA						
		F	2 wire, FOUNDATION Fieldbus						
		J	2-wire; 4-20mA HART, 5-point linearity protocol						
		K	2-wire; PROFIBUS PA, 5-point linearity protocol						
		L	2-wire; FOUNDATION Fieldbus, 5-point linearity protocol						
		M	4-wire 90-250VAC; 4-20mA HART,5-point linearity protocol						
		N	4-wire 10.5-32VDC;4-20mA HART,5-point linearity protocol						
		Y	Special version						
040				**Display / on-site operation**					
				1	Without LC display				
				2	With LC display VU331 incl. on-site operation				
				3	Prepared for remote display FHX 40				
				9	Special version				
050					**Housing**				
					A	Aluminium F12 housing coated to IP 68 NEMA 6P			
					C	Aluminium T12 housing coated to IP 68 NEMA 6P; with separate terminal compartment			
					D	Aluminium T12 housing coated to IP 68 NEMA 6P; with separate terminal compartment; with overvoltage protection			
					9	Special version			
060						**Screw union/entry**			
						2	M20x1.5 screw union		
						3	G 1/2“ entry		
						4	NPT 1/2“ entry		
						5	M12 PROFIBUS-PA plug-in connector		
						6	7/8" FF plug		
						9	Special version		
995							Marking		
							1	Tagging (TAG)	
							2	Bus address	
FMU41 -									Product designation

2.4 Product structure FMU42

010	Certificates	
	A	Variant for non-hazardous area
	E	NEPSI Ex nA II T6
	G	ATEX II 3G Ex nA IIC T6
	I	NEPSI Ex ia IIC T6
	J	NEPSI Ex d (Ia) IIC T6
	K	TIIS EEx ia II C T6 (in preparation)
	N	CSA General Purpose
	Q	NEPSI DIP
	S	FM IS Cl. I,II,III Div. 1 Gr. A-G / NI Cl. I Div. 2
	T	FM XP Cl. I,II,III Div. 1 Gr. A-G
	U	CSA IS Cl. I,II,III Div. 1 Gr. A-G / NI Cl. I Div. 2
	V	CSA XP Cl. I,II,III Div. 1 Gr. A-G
	1	ATEX II 1/2 G EEx ia IIC T6
	2	ATEX II 1/2 D, Alu blind cover
	4	ATEX II 1/2 G EEx d [ia] IIC T6
	5	ATEX II 1/3D
	6	ATEX II 3D Ex t IIIC T* °C Dc
	Y	Special certificate

020		Process connection	
		M	Mounting bracket FAU20
		P	UNI flange 3"/DN80/80, PP, max. 2.5bar abs./ 36psia suitable for 3" 150lbs / DN80 PN16 / 10K 80
		Q	UNI flange 3"/DN80/80, PVDF, max. 2.5bar abs./ 36psia suitable for 3" 150lbs / DN80 PN16 / 10K 80
		S	UNI flange 3"/DN80/80, 316L, max. 2.5bar abs./ 36psia suitable for 3" 150lbs / DN80 PN16 / 10K 80
		T	UNI flange 4"/DN100/100, PP, max. 2.5bar abs./ 36psia suitable for 4" 150lbs / DN100 PN16 / 10K100
		U	UNI flange 4"/DN100/100, PVDF, max. 2.5bar abs./ 36psia suitable for 4" 150lbs / DN100 PN16 / 10K100
		V	UNI flange 4"/DN100/100, 316L, max. 2.5bar abs./ 36psia suitable for 4" 150lbs / DN100 PN16 / 10K100
		Y	Special version

030			Power supply/communication	
			B	2 wire, 4 to 20mA-loop/HART
			H	4 wire, 10,5 to 32VDC / 4-20mA HART
			G	4 wire, 90 to 253VAC / 4-20mA HART
			D	2 wire, PROFIBUS PA
			F	2 wire, FOUNDATION Fieldbus
			J	2-wire; 4-20mA HART, 5-point linearity protocol
			K	2-wire; PROFIBUS PA, 5-point linearity protocol
			L	2-wire; FOUNDATION Fieldbus, 5-point linearity protocol
			M	4-wire 90-250VAC; 4-20mA HART,5-point linearity protocol
			N	4-wire 10.5-32VDC;4-20mA HART,5-point linearity protocol
			Y	Special version

040				Display / on-site operation	
				1	Without LC display
				2	With LC display VU331 incl. on-site operation
				3	Prepared for remote display FHX 40
				9	Special version

050					Housing	
					A	Aluminium F12 housing coated to IP 68 NEMA 6P
					C	Aluminium T12 housing coated to IP 68 NEMA 6P, with separate terminal compartment
					D	Aluminium T 12 housing coated to IP 68 NEMA 6P, with separate terminal compartment; with overvoltage protection
					Y	Special version

060	**Gland/Entry**	
	2	M20x1.5 gland
	3	G 1/2“ entry
	4	NPT 1/2“ entry
	5	M12 PROFIBUS-PA plug
	6	7/8" FF plug
	9	Special version
070	**Sealing Sensor/Flange**	
	2	VITON flat sealing
	3	EPDM flat sealing
	9	special version
080	**Additional options**	
	A	Additional options not selected
995	Marking	
	1	Tagging (TAG)
	2	Bus address
FMU42 –		Product designation

2.5 Product structure FMU43

010	**Certificates**								
	A	Variant for non-hazardous area							
	2	ATEX II 1/2D, Alu blind cover							
	5	ATEX II 1/3D							
	6	ATEX II 3D Ex t IIIC T* °C Dc							
	M	FM DIP Cl.II Div.1 Gr.E-G, NI Cl.I Div.2, Zone 2							
	N	CSA General Purpose							
	P	CSA DIP Cl.II Div.1 Gr.E-G, NI Cl.I Div.2, zone 2							
	Q	NEPSI DIP							
	Y	Special version							
020		**Process connection/material**							
		P	Flange DN 100/ANSI 4"/JIS 16K100, PP (universal slip-on flange included)						
		S	Flange DN 100/ANSI 4"/JIS 16K100, SS 316TI (universal slip-on flange included)						
		K	Without slip-on flange/without mounting bracket (customer mounting equipment)						
		M	With mounting bracket FAU20						
		Y	Special version						
030			**Power supply/communication**						
			H	4 wire, 10,5 to 32VDC / 4-20mA HART					
			G	4 wire, 90 to 253VAC / 4-20mA HART					
			D	2 wire, PROFIBUS PA					
			F	2 wire, FOUNDATION Fieldbus					
			J	2-wire; 4-20mA HART, 5-point linearity protocol					
			K	2-wire; PROFIBUS PA, 5-point linearity protocol					
			L	2-wire; FOUNDATION Fieldbus, 5-point linearity protocol					
			M	4-wire 90-250VAC; 4-20mA HART,5-point linearity protocol					
			N	4-wire 10.5-32VDC;4-20mA HART,5-point linearity protocol					
			Y	Special version					
040				**Display / on-site operation**					
				1	Without LC display				
				2	4-line display VU331, Envelope curve display on site				
				3	Prepared for remote display FHX 40				
				9	Special version				
050					**Housing**				
					A	Aluminium F12 housing coated to IP 68 NEMA 6P			
					9	Special version			
060						**Screw union/entry**			
						2	M20x1.5 screw union		
						3	G 1/2“ entry		
						4	NPT 1/2“ entry		
						5	M12 PROFIBUS-PA plug-in connector		
						6	7/8" FF plug		
						9	Special version		
995							Marking		
							1	Tagging (TAG)	
							2	Bus address	
FMU43 –									Product designation

2.6 Product structure FMU44

010	Approval	
	A	Non-hazardous area
	1	ATEX II 1/2G EEx ia IIC T6
	4	ATEX II 1/2G EEx d (ia) IIC T6
	G	ATEX II 3G Ex nA IIC T6
	2	ATEX II 1/2 D, Alu blind cover
	5	ATEX II 1/3 D
	6	ATEX II 3D Ex t IIIC T* °C Dc
	S	FM IS Cl.I,II,III Div.1 Gr.A-G, NI Cl.I Div.2, Zone 0,1,2 (in preparation)
	T	FM XP Cl.I,II,III Div.1 Gr.A-G, Zone 1,2 (in preparation)
	N	CSA General Purpose
	U	CSA IS Cl.I,II,III Div.1 Gr.A-G, NI Cl.I Div.2, zone 0,1,2
	V	CSA XP Cl.I,II,III Div.1 Gr.A-G
	K	TIIS EEx ia IIC T6 (in preparation)
	I	NEPSI Ex ia IIC T6 (in preparation)
	J	NEPSI Ex d(ia) IIC T6 (in preparation)
	E	NEPSI Ex nA II T6 (in preparation)
	Q	NEPSI DIP (in preparation)
	Y	Special version, to be specified

020		Process connection
	A	8" 150lbs FF, 316L, max 2.5bar abs./36psia
	E	UNI flange 6"/DN150/150, PP, max 2.5bar abs./ 36psia, suitable for 6" 150lbs / DN150 PN16 / 10K 150
	F	UNI flange 6"/DN150/150, PVDF, max 2.5bar abs./36psia, suitable for 6" 150lbs /DN150 PN16 / 10K 150
	G	UNI flange 6"/DN150/150, 316L, max 2.5bar abs. 36psia, suitable for 6" 150lbs / DN150 PN16 / 10K 150
	H	UNI flange DN200/200, PP, max 2.5bar abs./ 36 psia, suitable for DN200 PN16 / 10K 200
	J	UNI flange DN200/200, PVDF, max 2.5bar abs./ 36psia, suitable for DN200 PN16 / 10K 200
	K	UNI flange DN200/200, 316L, max 2.5bar abs./ 36psia, suitable for DN200 PN16 / 10K 200
	L	8" 150lbs FF, PP, max 2.5bar abs./ 36psia
	M	Mounting bracket FAU20
	N	8" 150lbs FF, PVDF, max 2.5bar abs./ 36psia
	T	UNI flange 4"/DN100/100, PP, max 2.5bar abs./ 36psia, suitable for 4" 150lbs / DN100 PN16 / 10K 100
	U	UNI flange 4"/DN100/100, PVDF, max. 2.5bar abs./ 36 psia, suitable for 4" 150lbs / DN100 PN16 / 10K 100
	V	UNI flange 4"/DN100/100, 316L, max 2.5bar abs./ 36psia, suitable for 4" 150lbs / DN100 PN16 / 10K 100
	Y	Special version, to be specified

030			Power supply; Output
		B	2-wire; 4-20mA HART
		D	2-wire; PROFIBUS PA
		F	2-wire; FOUNDATION Fieldbus
		G	4-wire 90-250VAC; 4-20mA HART
		H	4-wire 10.5-32VDC; 4-20mA HART
		J	2-wire; 4-20mA HART, 5-point linearity protocol
		K	2-wire; PROFIBUS PA, 5-point linearity protocol
		L	2-wire; FOUNDATION Fieldbus, 5-point linearity protocol
		M	4-wire 90-250VAC; 4-20mA HART,5-point linearity protocol
		N	4-wire 10.5-32VDC;4-20mA HART,5-point linearity protocol
		Y	Special version, to be specified

040				Operation
			1	w/o display, via communication
			2	4-line display VU331, Envelope curve display on site
			3	Prepared for FHX40, Remote display (accessory)
			9	Special version, to be specified

050	**Housing**	
	A	F12 Alu, coated IP68 NEMA6P
	C	T12 Alu, coated IP68 NEMA6P, Separate conn. compartment
	D	T12 Alu, coated IP68 NEMA6P + OVP, Sep. conn. compartment, OVP = overvoltage protection
	9	Special version, to be specified
060	**Cable entry**	
	2	Gland M20 (EEx d > thread M20)
	3	Thread G1/2
	4	Thread NPT 1/2
	5	Plug M12
	6	Plug 7/8“
	9	Special version, to be specified
070	**Process Sealing Sensor/ Flange**	
	2	Viton
	3	EPDM
	9	Special version, to be specified
080	**Additional option**	
	A	Basic version
	Y	Special version, to be specified
995	Marking	
	1	Tagging (TAG)
	2	Bus address
FMU44 -		complete product designation

2.7 Scope of delivery

2.7.1 Instrument and accessories

- Instrument according to the version ordered
- Accessories (→ 📄 68)
- Brief operating instructions KA01063F/00/EN for quick commissioning
- Brief operating instructions KA00183F/00/A2 (basic setup/troubleshooting), housed in the instrument)
- For certified instrument versions: Safety Instructions, Control- or Installation drawings
- For FMU40 *R**** and FMU41 *R****: counter nut (PC)
- For FMU40/41: sealing ring (EPDM)
- For gland M20x1.5:
  – 1 cable gland for 2-wire instruments
  – 2 cable glands for 4-wire instruments
  The cable glands are mounted on delivery.
- Endress+Hauser operating program on the enclosed CD-ROM
- CD-ROM with further documentation, e. g.
  - Technical Information
  - Operating Instructions
  - Description of Intrument Functions

2.8 Certificates and approvals

CE mark, declaration of conformity
The device is designed to meet state-of-the-art safety requirements, has been tested and left the factory in a condition in which it is safe to operate. The device complies with the applicable standards and regulations as listed in the EC declaration of conformity and thus complies with the statutory requirements of the EC directives. Endress+Hauser confirms the successful testing of the device by affixing to it the CE mark.

2.9 Registered trademarks

PROFIBUS PA®
Registered trademark of PROFIBUS PA Communication Foundation, Austin, USA

FieldCare®
Trademark of Endress+Hauser Process Solutions AG.

ToF®
Registered trademark of the company Endress+Hauser GmbH+Co. KG, Maulburg, Germany

PulseMaster®
Registered trademark of the company Endress+Hauser GmbH+Co. KG, Maulburg, Germany

3 Installation

3.1 Design; dimensions

3.1.1 FMU40, FMU41

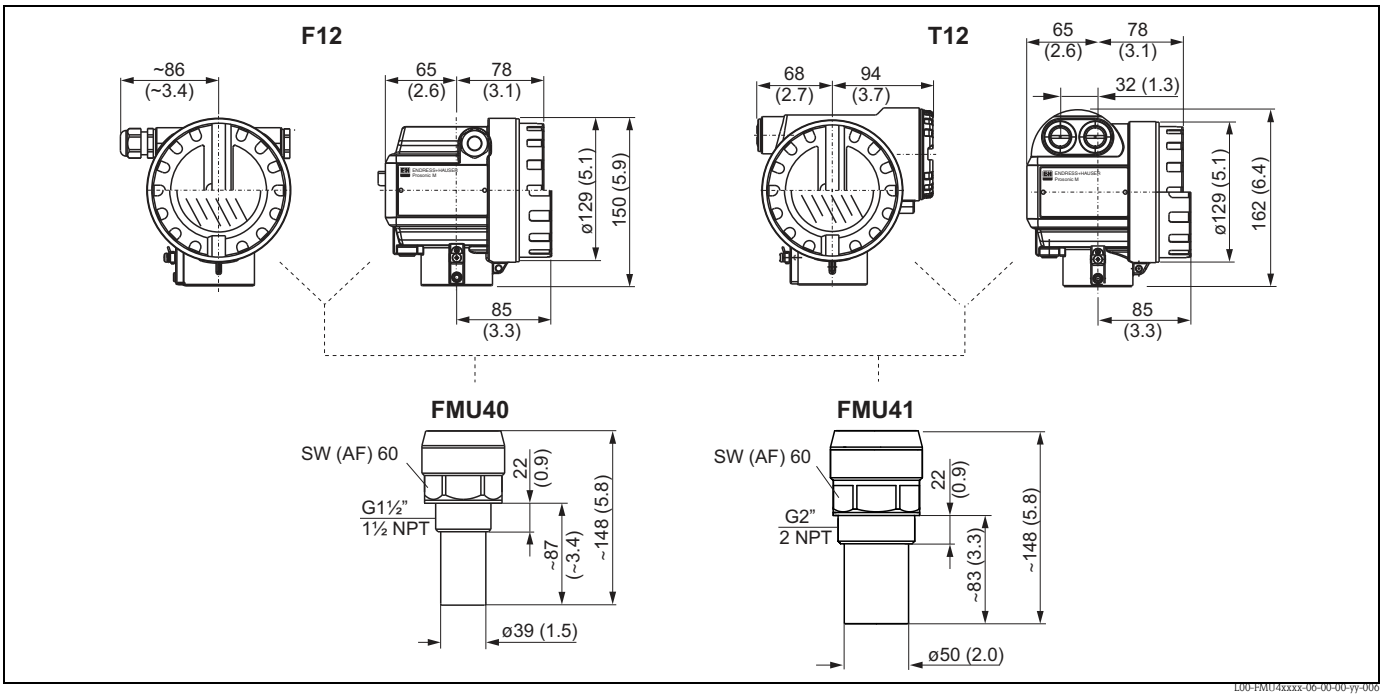

Dimensions in mm (in)

3.1.2 FMU42, FMU44 with slip-on flange

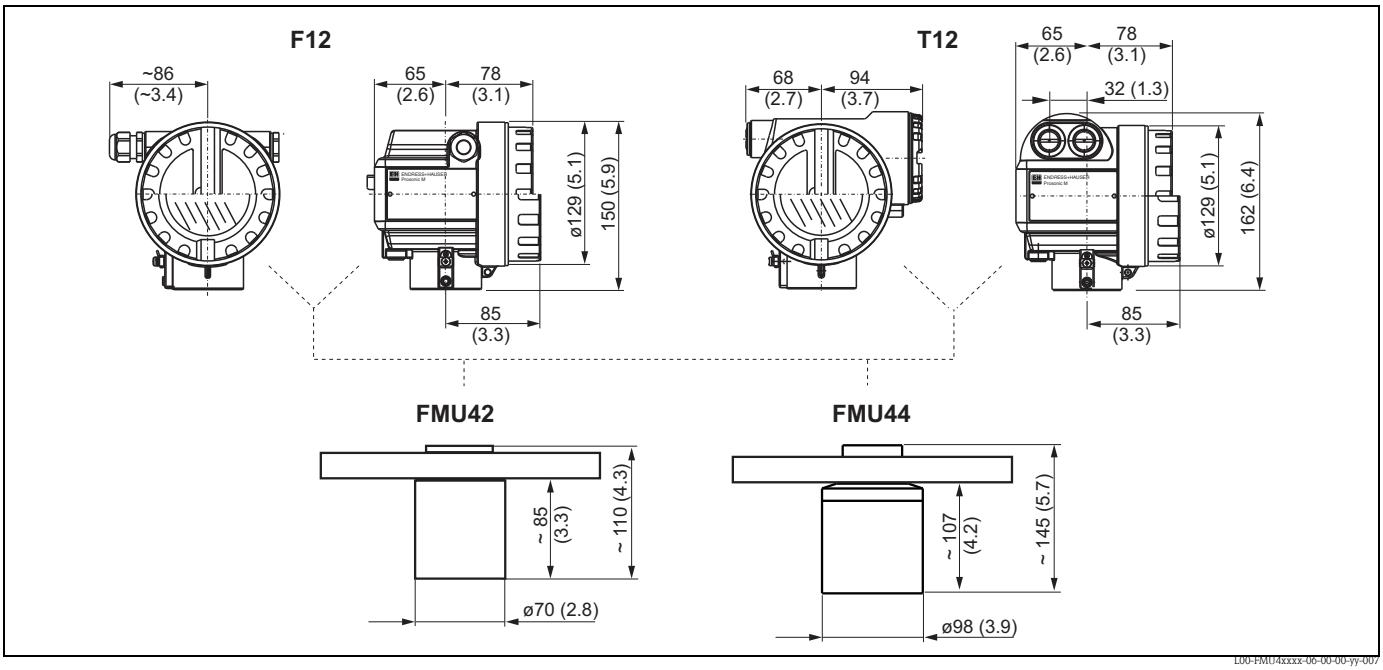

Dimensions in mm (in)

3.1.3 FMU42, FMU44 with mounting bracket

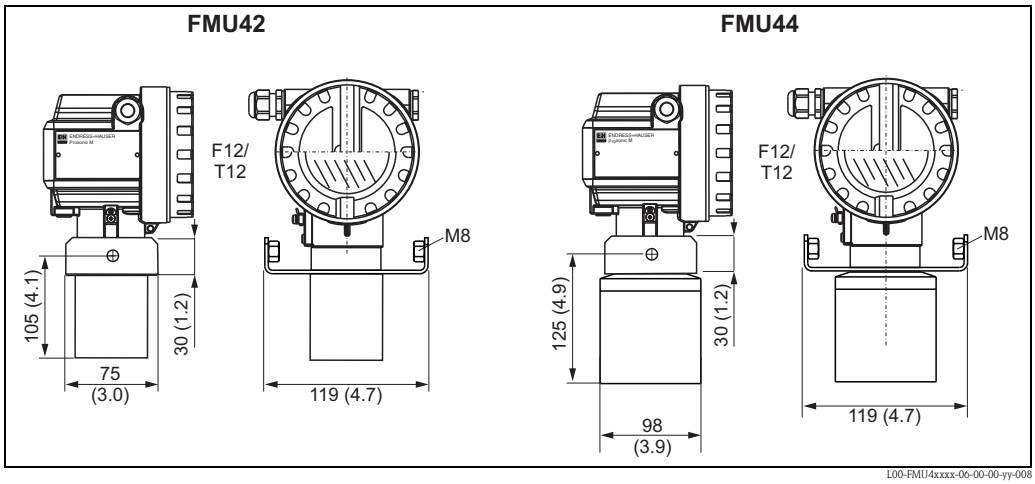

Dimensions in mm (in)

3.1.4 FMU43

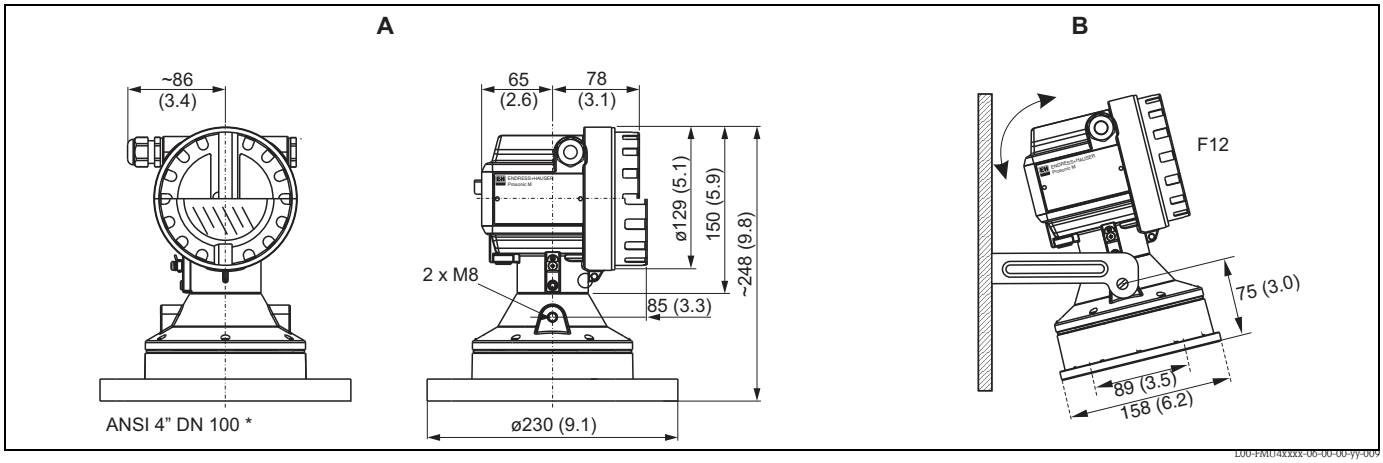

Dimensions in mm (in)
A *With slip-on flange* ***B*** *With mounting bracket*

3.1.5 Mounting bracket for FMU42, FMU43 and FMU44

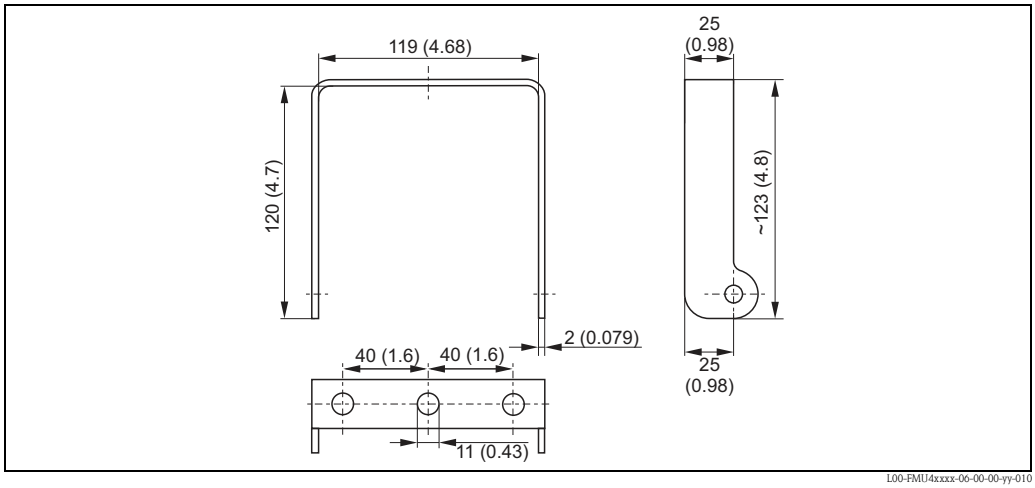

Dimensions in mm (in)

3.1.6 Flanges for FMU42 and FMU44

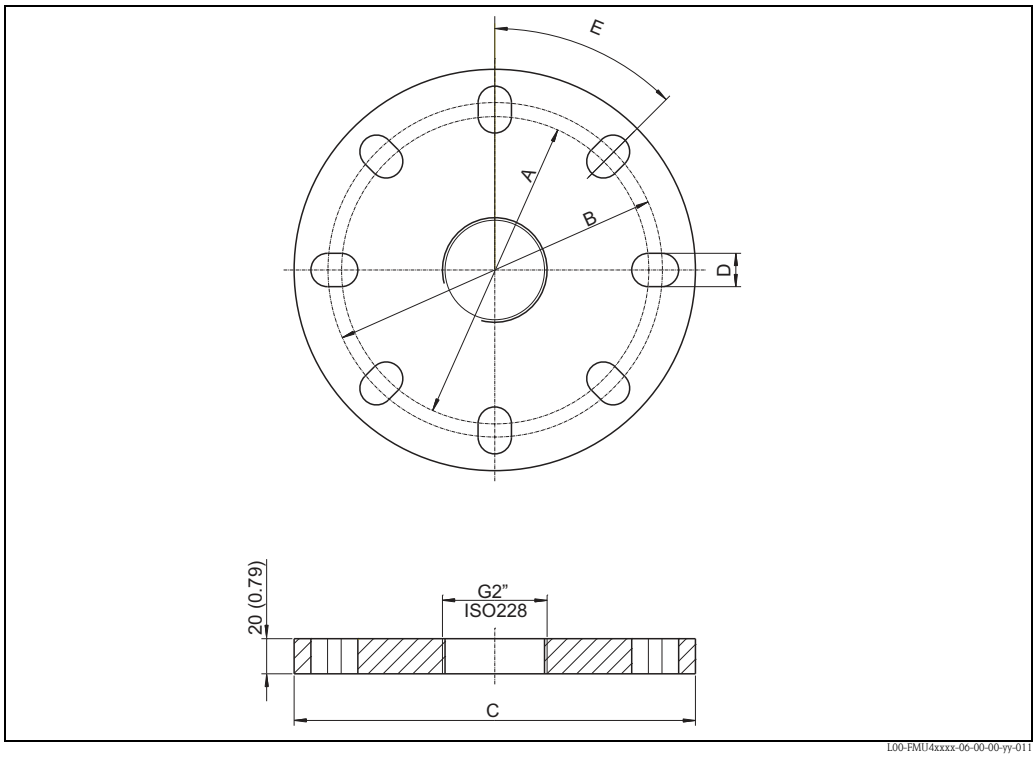

Dimensions in mm (in)

suitable for	A	B	C	D	E	number of boreholes
3" 150 lbs / DN80 PN16 / 10 K 80	150 mm (5.91")	160 mm (6.30")	200 mm (7.87")	19 mm (0.75")	45°	8
4" 150 lbs / DN100 PN16 / 10 K 100	175 mm (6.90")	190.5 mm (7.50")	228.6 mm (9.00")	19 mm (0.75")	45°	8
6" 150 lbs / DN150 PN16 / 10 K 150	240 mm (9.45")	241.3 mm (9.50")	285 mm (11.22")	23 mm (0.91")	45°	8
8" 150 lbs	298.5 mm (11.75")	298.5 mm (11.75")	342.9 mm (13.50")	22. 5 mm (0.89")	45°	8
DN200 PN16 / 10 K 200	290 mm (11.42")	295 mm (11.61")	340 mm (13.39")	23 mm (0.91")	30°	12

3.2 Installation variants

3.2.1 Installation variants FMU 40, FMU 41

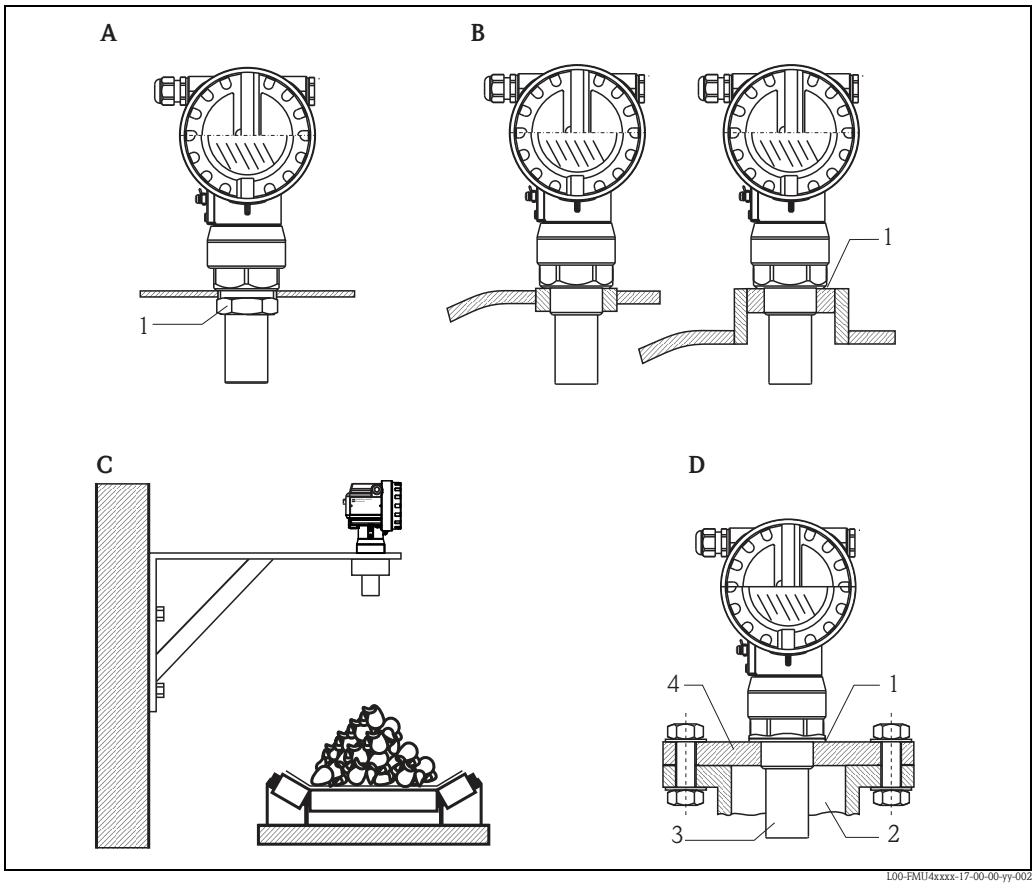

A Installation with counter nut
1 Counter nut (PC) supplied for G1½ and G2 instruments
B Installation with sleeve
1 Sealing ring (EPDM) supplied
C Installation with installation bracket
D Installation with screw in flange
1 Sealing ring (EPDM) supplied
2 Nozzle
3 Sensor
4 Screw in flange

For installation bracket or adapter flange → 🖹 68, "Accessories".

3.2.2 Installation variants FMU42, FMU44

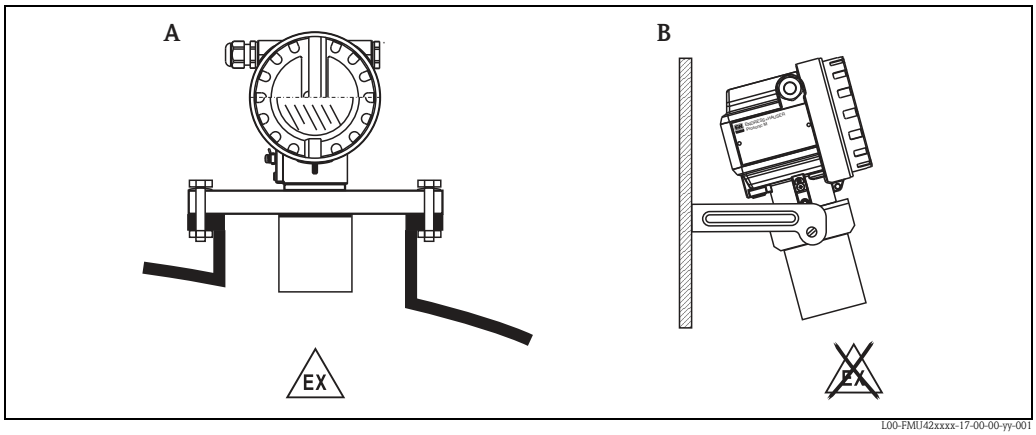

A Installation with universal flansch, (Ex-hazardous, e.g. Zone 20)
B Installation with mounting bracket, (Non-Ex-hazardous, Zone 20)

3.2.3 Installation variants FMU43

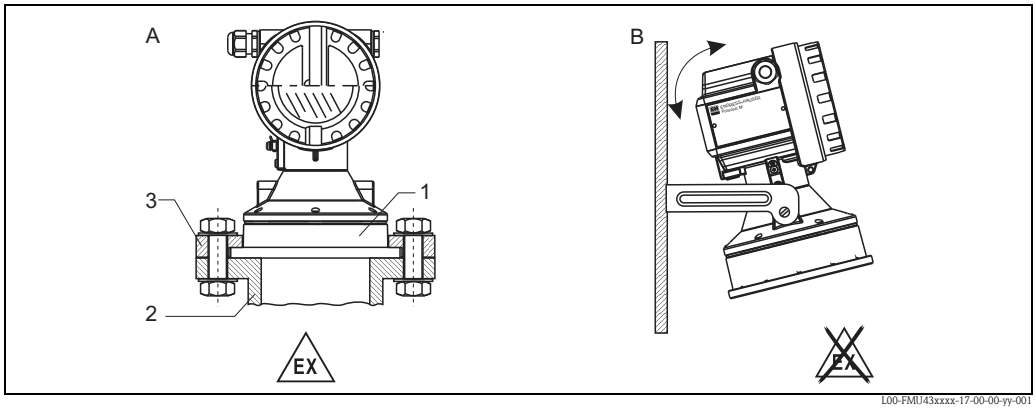

A Installation with universal slip-on flange (option)
1 Sensor
2 Nozzle
3 Slip-on flange
B Installation with mounting bracket

3.3 Installation conditions

3.3.1 Installation conditions for level measurements

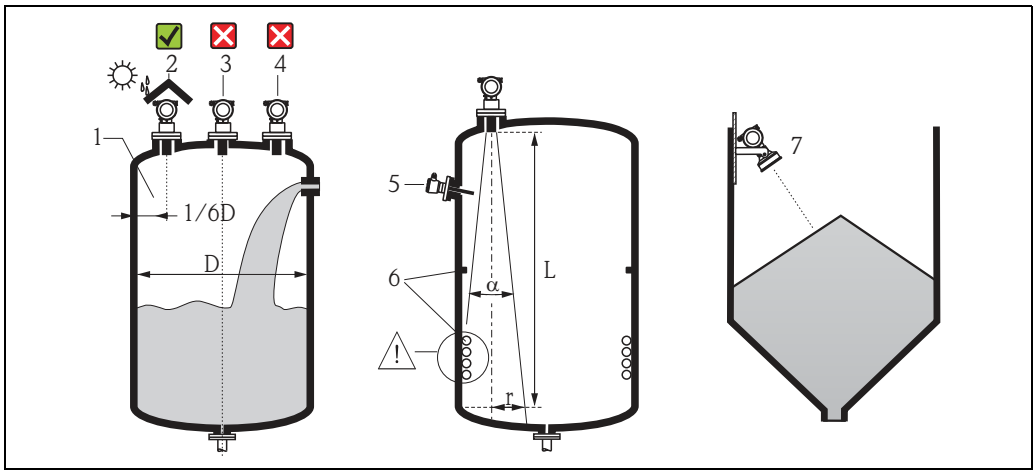

L00-FMU4xxxx-17-00-00-yy-005

- Do not install the sensor in the middle of the tank (3). We recommend leaving a distance between the sensor and the tank wall (1) measuring 1/6 of the tank diameter.
- Use a protective cover, in order to protect the device from direct sun or rain (2).
- Avoid measurements through the filling curtain (4).
- Make sure that equipment (5) such as limit switches, temperature sensors, etc. are not located within the emitting angle α. In particular, symmetrical equipment (6) such as heating coils, baffles etc. can influence measurement.
- Align the sensor so that it is vertical to the product surface (7).
- Never install two ultrasonic measuring devices in a tank, as the two signals may affect each other.
- To estimate the detection range, use the 3 dB emitting angle α.

Sensor	α	L_{max}	r_{max}
FMU40	11°	5 m (16 ft)	0.48 m (1.6 ft)
FMU41	11°	8 m (26 ft)	0.77 m (2.5 ft)
FMU42	9°	10 m (33 ft)	0.79 m (2.6 ft)
FMU43	6°	15 m (49 ft)	0.79 m (2.6 ft)
FMU44	11 °	20 m (66 ft)	1.93 m (6.3 ft)

3.3.2 Installation in narrow shafts

In narrow shafts with strong interference echoes, we recommend using an ultrasound guide pipe (e.g. PE or PVC wastewater pipe) with a minimum diameter of 100 mm (3.94 in). Make sure that the pipe is not soiled by accumulated dirt. If necessary, clean the pipe at regular intervals.

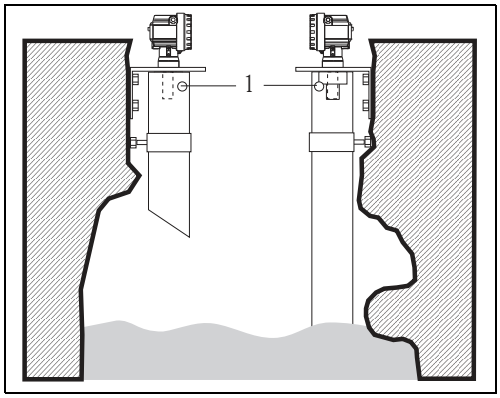

L00-FMU4xxxx-17-00-00-yy-010

1 Venting hole

3.3.3 Installation conditions for flow measurements

- Install the Prosonic M at the inflow side, as close above the maximum water level H_{max} as possible (take into account the blocking distance BD).
- Position the Prosonic M in the middle of the channel or weir.
- Align the sensor membrane parallel to the water surface.
- Keep to the installation distance of the channel or weir.
- You can enter the "Flow to Level" linearisation curve ("Q/h curve") using FieldCare or manually via the on-site display.

Example: Khafagi-Venturi flume

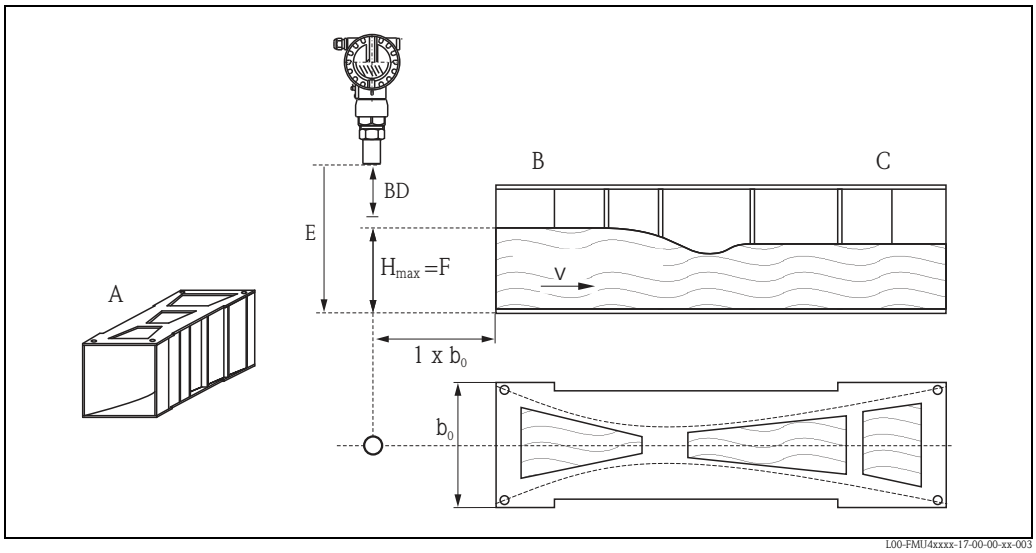

A Khafagi-Venturi flume
B Inflow
C Outflow
BD Blocking distance
E Empty calibration
F Full calibration
V Direction of flow

Example: Triangular weir

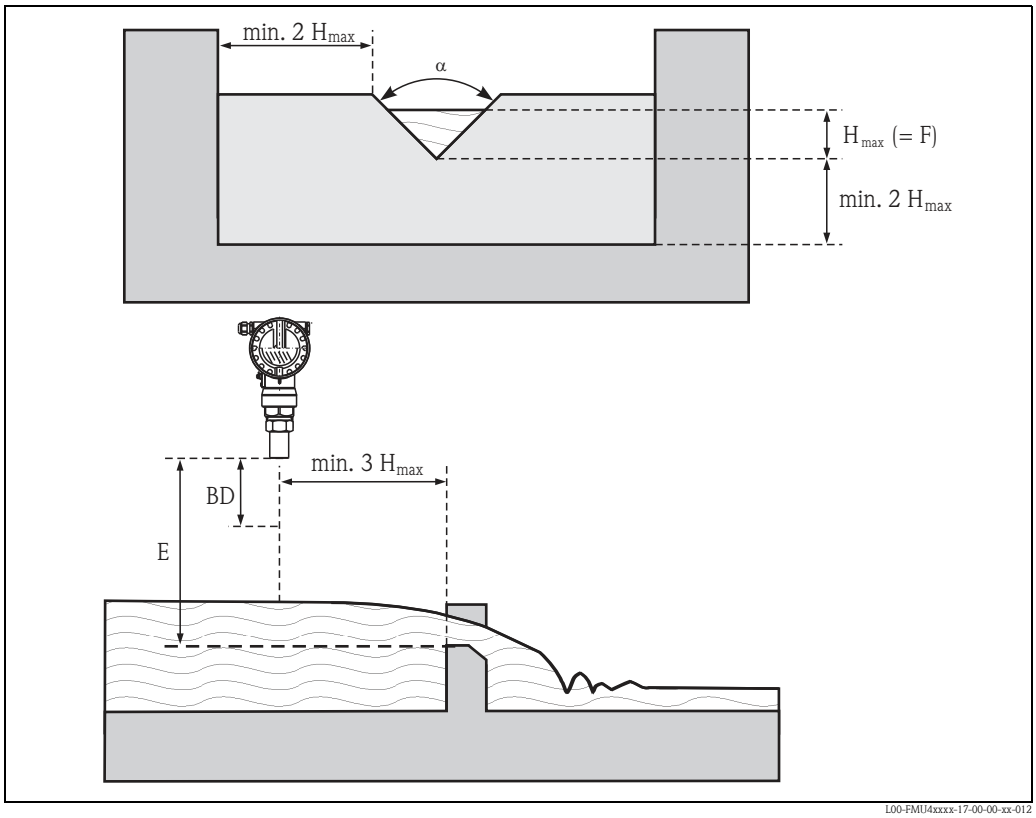

BD Blocking distance
E Empty calibration
F Full calibration

3.4 Measuring range

3.4.1 Blocking distance, Nozzle mounting

Install the Prosonic M at a height so that the blocking distance BD is not undershot, even at maximum fill level. Use a pipe nozzle if you cannot maintain the blocking distance in any other way. The interior of the nozzle must be smooth and may not contain any edges or welded joints. In particular, there should be no burr on the inside of the tank side nozzle end. Note the specified limits for nozzle diameter and length. To minimise disturbing factors, we recommend an angled socket edge (ideally 45°).

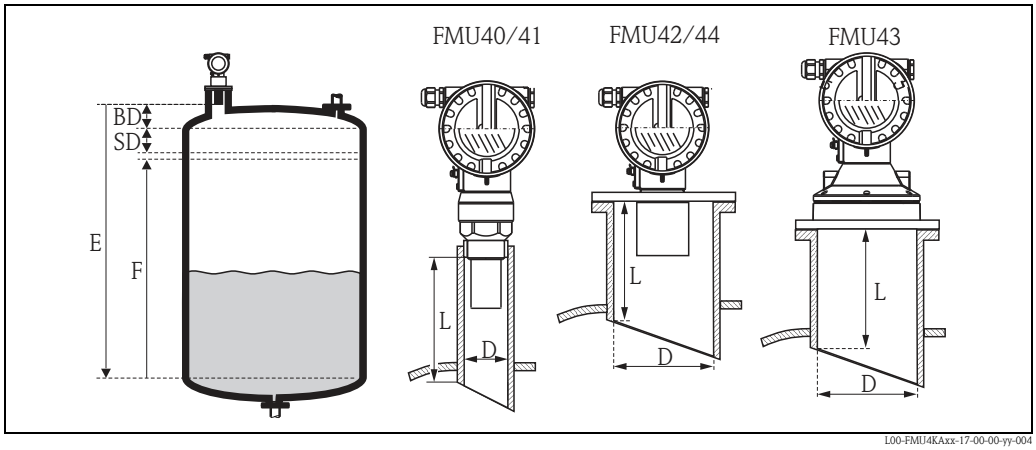

BD Blocking distance
SD Safety distance
E Empty calibration
F Full calibration (span)
D Nozzle diameter
L Nozzle length

	Maximum nozzle length [mm (in)]				
Nozzle diameter	**FMU40**	**FMU41**	**FMU42**	**FMU43**	**FMU44**
DN50/2"	80 (3.15)				
DN80/3"	240 (9.45)	240 (9.45)	250 (9.84)		
DN100/4"	300 (11.8)	300 (11.8)	300 (11.8)	300 (11.8)	
DN150/6"	400 (15.7)	400 (15.7)	400 (15.7)	300 (11.8)	400 (15.7)
DN200/8"	400 (15.7)	400 (15.7)	400 (15.7)	300 (11.8)	400 (15.7)
DN250/10"	400 (15.7)	400 (15.7)	400 (15.7)	300 (11.8)	400 (15.7)
DN300/12"	400 (15.7)	400 (15.7)	400 (15.7)	300 (11.8)	400 (15.7)
Sensor characteristics					
Emitting angle α	11°	11°	9°	6°	11°
Blocking distance [m (ft)]	0.25 (0.8)	0.35 (1.1)	0.4 (1.3)	0.6 (2.0)	0.5 (1.6)
Max. range [m (ft)] in liquids	5 (16.0)	8 (26.0)	10 (33.0)	15 (49.0)	20 (66.0)
Max. range [m (ft)] in solids	2 (6.6)	3.5 (11.0)	5 (16.0)	7 (23.0)	10 (33.0)

Caution!
If the blocking distance is undershot, it may cause device malfunction.

3.4.2 Safety distance

If the level rises to the safety distance SD, the device switches to warning or alarm status.
The size of SD can be set freely in the **"Safety distance" (015)** function.The **"in safety distance" (016)** function defines how the device reacts if the level enters the safety distance.

There are three options:
- **Warning**: The device outputs an error message but continues measurement.
- **Alarm**: The device outputs an error message. The output signal assumes the value defined in the **"Output on alarm" (011)** function (MAX, MIN, user-specific value or holds the last value). As soon as the level drops below the safety distance, the device recommences measurement.
- **Self holding**: The device reacts in the same way as for an alarm. However, the alarm condition continues after the level drops below the safety distance. The device only recommences measurement when you cancel the alarm using the **"Ackn. alarm" (017)** function.

3.4.3 Range

The sensor range is dependent on the measuring conditions. Refer to Technical Information TI00365F/00/EN for an estimation. The maximum range is shown in the above diagram (valid for good conditions).

Sensor	maximum range
FMU40	5 m (16 ft)
FMU41	8 m (26 ft)
FMU42	10 m (33 ft)
FMU43	15 m (49 ft)
FMU44	20 m (66 ft)

3.5 Installation hint for FMU40, FMU41

☝ Caution!
Use only the screw-in piece to screw in the Prosonic M.

Screw the Prosonic M at the screw-in piece using an 60 AF spanner.
Maximum torque: 20 Nm (14.75 lbf ft).

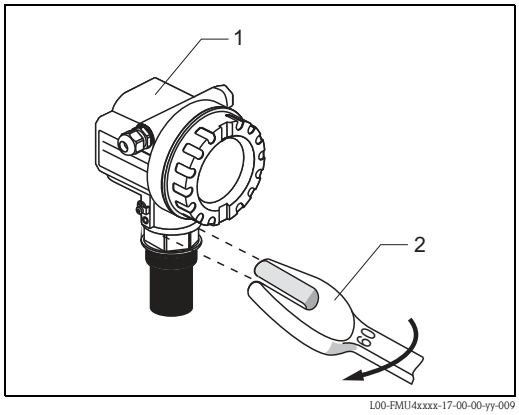

1 Housing F12 or T12
2 60 AF

3.6 Turn housing

After mounting, the housing can be turned 350° in order to simplify access to the display and the terminal compartment. Proceed as follows to turn the housing to the required position:
- Undo the fixing screws (allen key 4 mm (0.16 in))
- Turn the housing in the required direction
- Tighten up the fixing screws. Maximum torque 0.5 Nm (0.36 lbf ft).
- Loctite can be used for securing the screw.

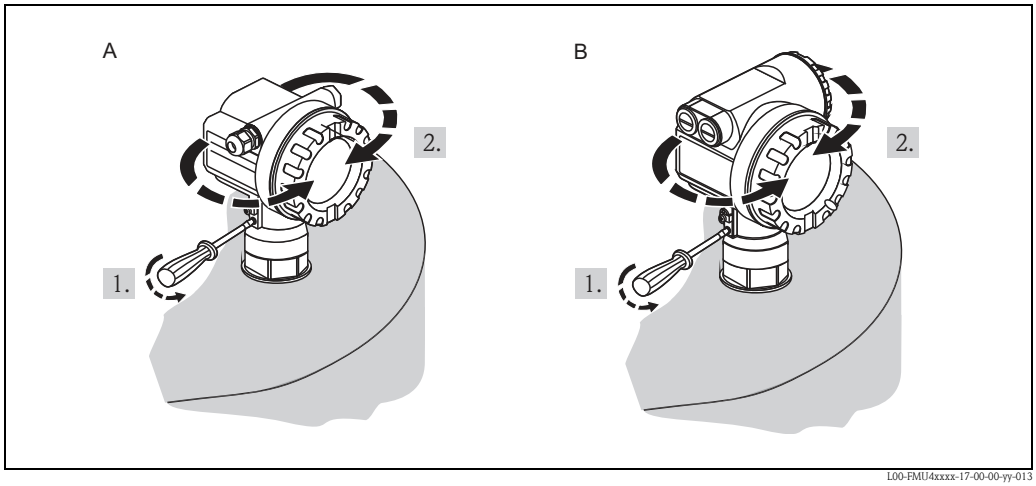

A *Housing F12*
B *Housing T12*

3.7 Installation check

After installing the device, carry out the following checks:
- Is the device damaged (visual inspection)?
- Does the device correspond to the measuring point specifications for process temperature, process pressure, ambient temperature, measuring range etc.
- If available: Are the measuring point number and labelling correct (visual inspection)?
- Is the measuring device sufficiently protected against precipitation and direct sunlight?
- Are the cable glands tightened correctly?
- After aligning the housing, check the process seal at the nozzle or flange.

4 Wiring

4.1 Electrical connection

Caution!
Before connection please note the following:
- The power supply must be identical to the data on the nameplate.
- Switch off power supply before connecting up the instrument.
- Connect equipotential bonding to transmitter ground terminal before connecting up the instrument → 30, "Recommended connection".

Warning!
When you use the measuring system in hazardous areas, make sure to comply with national standards and the specifications in the safety instructions (XA's). Make sure you use the specified cable gland.

4.1.1 Wiring in the housing F12

1. Unscrew housing cover (1).
2. Remove display (2) if fitted.
3. Remove cover plate (3) from terminal compartment.
4. Pull out terminal module (4) slightly using pulling loop.
5. Insert cable (5) through gland (6).

   Caution!
   If possible, insert the cable from above and let a draining loop in order to avoid intrusion of humidity.
6. Connect cable screen to the grounding terminal (7) within the terminal compartment.
7. Make connection according to terminal assignment (see below).
8. Re-insert terminal module (4).
9. Tighten cable gland (6).
10. Tighten screws on cover plate (3).
11. Insert display (2) if fitted.
12. Screw on housing cover (1).
13. Switch on power supply.

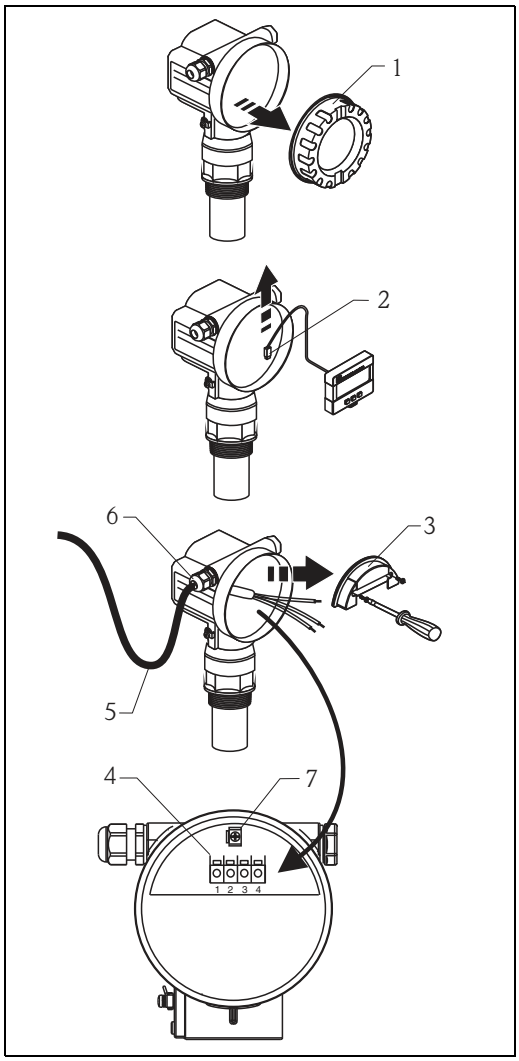

L00-FMU4xxxx-04-00-00-yy-008

4.1.2 Wiring in the housing T12

1. Unscrew the cover (1) of the separate connection room.
2. Insert cable (2) through gland (3).

   ☝ Caution!
   If possible, insert the cable from above and let a draining loop in order to avoid intrusion of humidity.
3. Connect cable screen to the grounding terminal (4) within the connection room.
4. Make connection according to the terminal assignment (see below).
5. Tighten cable gland (3).
6. Screw on housing cover (1).
7. Switch on power supply.

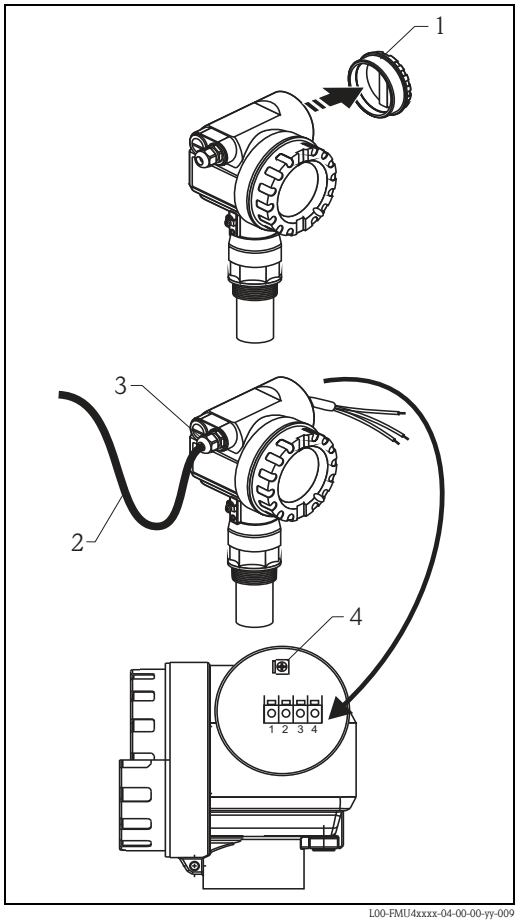

L00-FMU4xxxx-04-00-00-yy-009

4.1.3 Wiring with M12 plug

1. Insert plug (1) into bushing (2).
2. Screw firmly.
3. Ground instrument according to the desired safety concept.

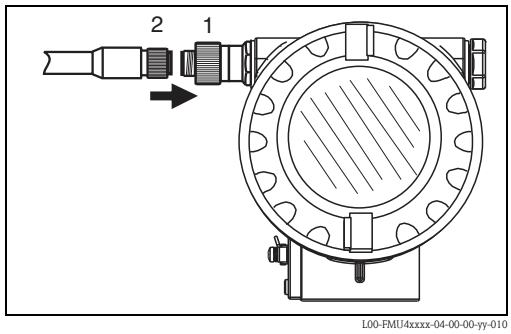

L00-FMU4xxxx-04-00-00-yy-010

Pin assignment of the M12 plug connector (PROFIBUS PA plug)

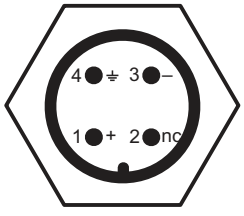

L00-FMxxxxxx-04-00-00-yy-016

Pin	Meaning
1	Signal +
2	not connected
3	Signal –
4	Ground

4.2 Terminal assignment

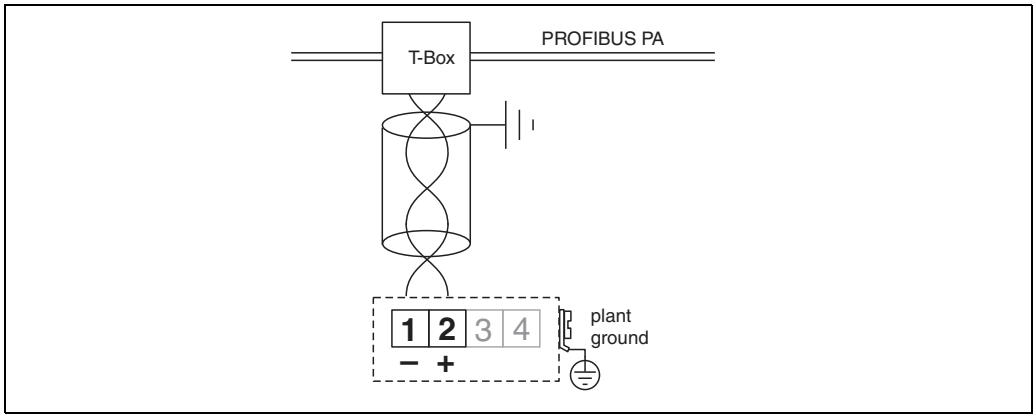

4.3 Cable specifications PROFIBUS

Twisted, screened pairs must be used. The following specification must be met for explosion hazardous application (EN 50 020, FISCO model):

- Loop-resistance (DC): 15 to 150 Ω/km,
- Specific inductance: 0.4 to 1 mH/km,
- Specific capacitance: 80 to 200 nF/km

The following cable types can be used, for example

Non-Ex-area:
- Siemens 6XV1 830-5BH10 (black),
- Kerpen CEL-PE/OSCR/PVC/FRLA FB-02YS(ST)YFL (grey)
- Belden 3076F (orange)

Ex-area:
- Siemens 6XV1 830-5AH10 (blue),
- Belden 3076F, Kerpen CEL-PE/OSCR/PVC/FRLA FB-02YS(ST)YFL (blue)

4.4 Supply voltage

The following values are the voltages across the terminals directly at the instrument:

Type	minimum terminal voltage	maximum terminal voltage
standard	9 V	32 V
Ex ia (FISCO model	9 V	17.5 V
Ex ia (Entity concept)	9 V	24 V

The current consumption is approx. 13 mA for the range of voltages given above.

4.5 Recommended connection

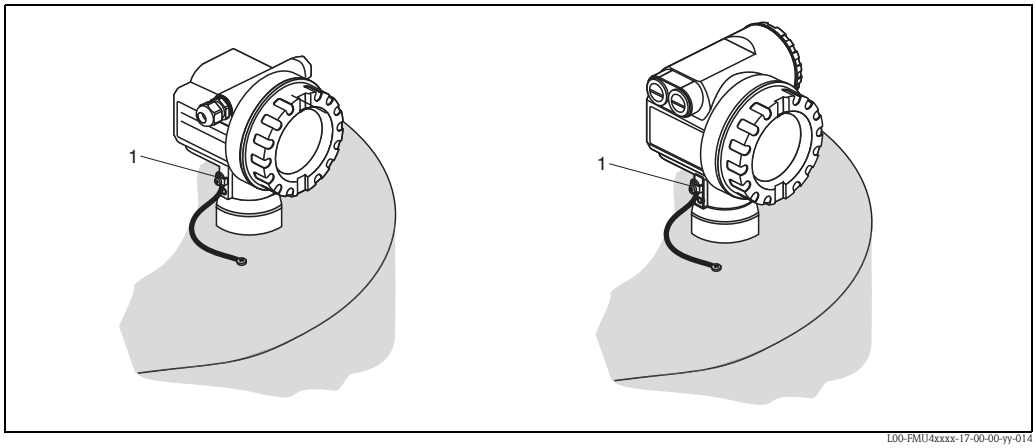

1 External ground terminal of the transmitter

For maximum EMC protection please observe the following points:
- As the metal housing of the Prosonic M is isolated from the tank by the plastic sensor, a low-impedance connection between the housing and tank/bracket/flange should be installed in order to ensure electromagnetic compatibility (EMC).
  For optimum EMC the connection should be as short as possible. Ideally, a ground strap should be used.
- The external ground terminal on the transmitter must be connected to ground.
- The continuity of the cable screening between tapping points must be ensured.
- If potential equalisation is present between the individual grounding points, ground the screening at each cable end or connect it to the device housing (as short as possible).
- If there are large differences in potential between grounding points, the grounding should run via a capacitor that is suitable for high frequency use (e.g. ceramic 10 nF/250 V~).

Caution!
Applications, which are subject to the explosion prevention, permit only under special conditions the repeated grounding of the protective screen , see to EN 60 079-14.

Note!
Further recommendations concerning the structure and equipotential bonding of the network can be found in Operating Instructions BA 198F "PROFIBUS-DP/-PA: Guidlines for planning and commissioning" and in the PROFIBUS-PA sapecifications EN 50170 (DIN 19245).

4.6 Checking the connection

After wiring the device, carry out the following checks:
- Are the terminals correctly assigned?
- Is the cable gland tight?
- Is the M12 connector screwed tight?
- Is the housing cover fully screwed on?
- If power supply available: Does a display appear on the display module?

5 Operation

5.1 Display and operating elements

5.1.1 On-site display VU331

The LCD module VU331 for display and operation is located beneath the housing cover. The measured value is legible through the glass in the cover. Open the cover to operate the device.

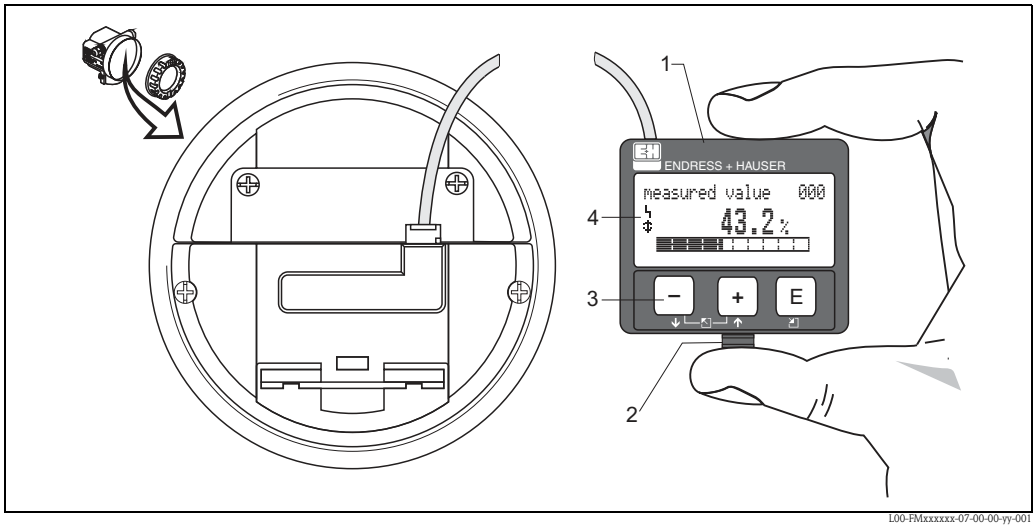

1 LCD liquid crystal display
2 Snap fit
3 Keys
4 Symbols

5.1.2 Display appearance

measured value display

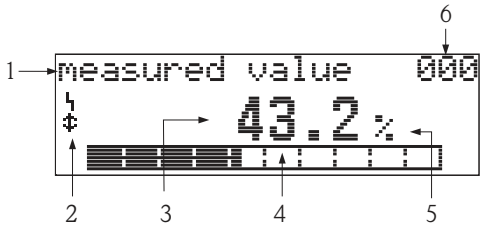

1. label
2. symbol
3. value
4. bargraph
5. unit
6. position in menu

group selection

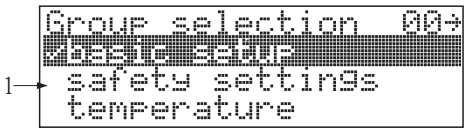

1. selection list

Function with free parameter

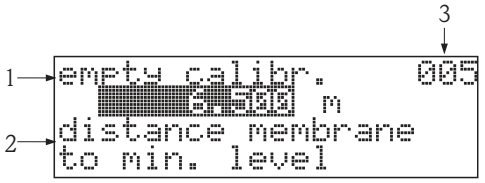

1. label
2. help texts
3. position in menu

envelope curve



1. envelope curve

In the measured value display, the bargraph corresponds to the output.
The bargraph is segmented in 10 bars. Each completely filled bar represents a change of 10% of the adjusted span.

5.1.3 Display symbols

The following table describes the symbols that appear on the liquid crystal display:

Sybmol	Meaning
	ALARM_SYMBOL This alarm symbol appears when the instrument is in an alarm state. If the symbol flashes, this indicates a warning.
	LOCK_SYMBOL This lock symbol appears when the instrument is locked, i.e. if no input is possible.
	COM_SYMBOL This communication symbol appears when a data transmission via e.g. HART, PROFIBUS PA or FOUNDATION Fieldbus is in progress.

5.1.4 Function of the keys

Key(s)	Meaning
+ or ↑	Navigate upwards in the selection list Edit numeric value within a function
− or ↓	Navigate downwards in the selection list Edit numeric value within a function
Esc − + or ←	Navigate to the left within a function group
E	Navigate to the right within a function group, confirmation.
+ and E or − and E	Contrast settings of the LCD
+ and − and E	Hardware lock / unlock After a hardware lock, an operation of the instrument via display or communication is not possible! The hardware can only be unlocked via the display. An unlock parameter must be entered to do so.

5.2 Function codes

For easy orientation within the function menus, for each function a position is shown on the display.

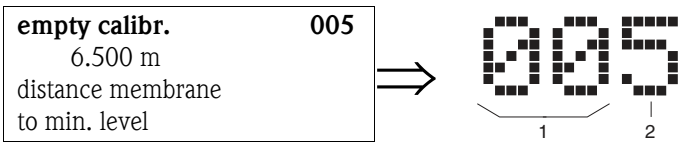

1 Function group
2 Function

The first two digits identify the function group:

- **basic setup 00**
- **safety settings 01**
- **linearisation 04**

. . .

The third digit numbers the individual functions within the function group:

- **basic setup 00** →
  - **tank shape 002**
  - **medium property 003**
  - **process cond. 004**

  . . .

Hereafter the position is always given in brackets (e.g. "**tank shape**" **(002)**) after the described function.

5.3 PROFIBUS PA communication

5.3.1 Synopsis

A maximum of 32 transmitters can be connected to the bus (only 8 in explosion hazardous areas Ex ia IIC according to the FISCO model). The bus power is supplied by the segment coupler. On-site as well as remote operation are possible. For detailed information on the PROFIBUS PA standard refer to Operation Instructions BA00034S/00/EN and the standards EN50170/DIN19245 (PROFIBUS PA) and EN50020 (FISCO model).

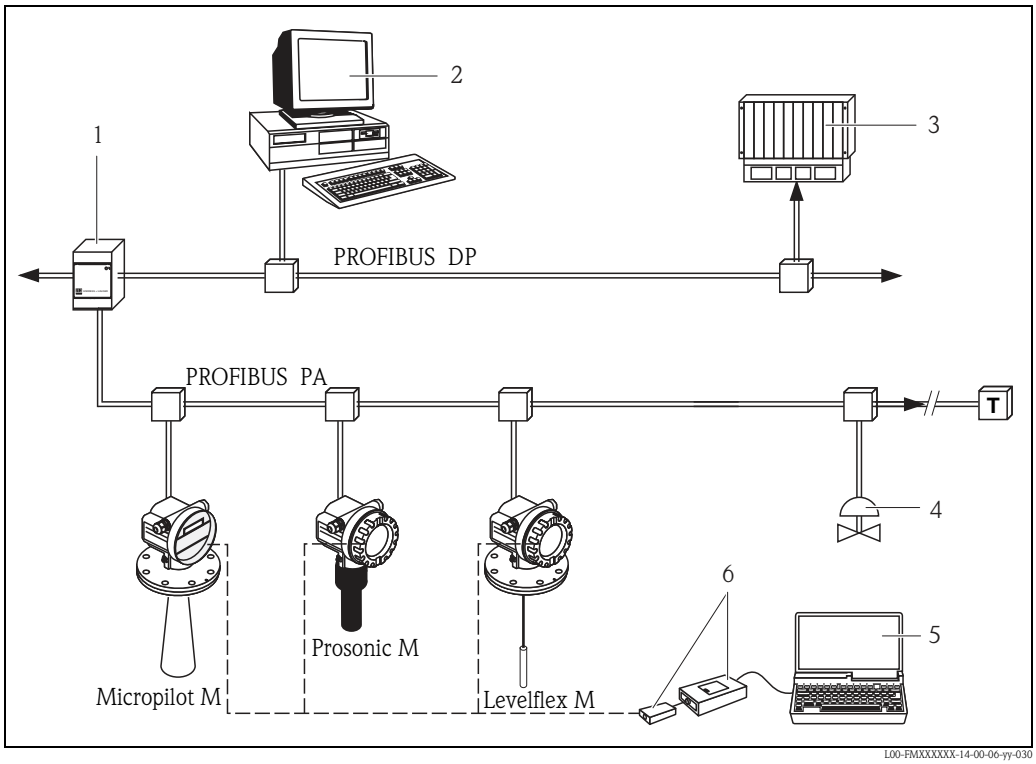

1 Segment coupler
2 Computer with Profiboard/Proficard and operating tool (FieldCare)
3 PLC (programmable logic controller)
4 More functions (valves etc.)
5 Computer with operating tool (FieldCare)
6 Commubox FXA291 with ToF Adapter FXA291

5.3.2 Device address

Selecting the device address

- Every PROFIBUS-PA device must be given an address. If the address is not set correctly, the device will not be recognised by the process control system.
- A device address may appear only once within a particular PROFIBUS-PA network, see BA00034S.
- Valid device addresses are in the range 1 and 126. All devices are delivered from the factory with the software address 126.
- The default address can be used to check the function of the device and connect it to an operating PROFIBUS-PA system. Afterwards the address must be changed to allow other devices to be connected to the network.

Software addressing

Software addressing comes into operation, when DIP-switch 8 is in the position "ON". BA00034S describes, how to set the address in this case.

Hardware addressing

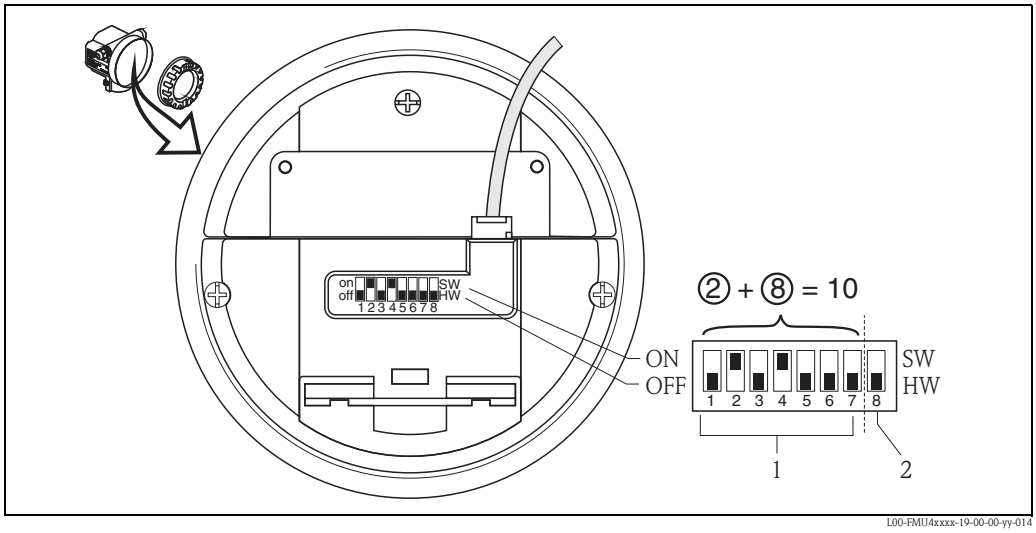

1 Adress
2 Method of addressing

Hardware addressing comes into operation, when DIP switch 8 is in the position "HW (OFF)". In this case the address is determinded by the position of DIP-switches 1 to 7 according to the following table:

Switch No.	**1**	**2**	**3**	**4**	**5**	**6**	**7**
Value in position "OFF"	0	0	0	0	0	0	0
Value in Position "ON"	1	2	4	8	16	32	64

The new address becomes valid 10 seconds after switching.
It results a new device restart.

5.3.3 Device database and type files

A device database file (GSD) contains a description of the properties of the PROFIBUS-PA device, e.g. the supported transmission rates and the type and format of the digital information output to the PLC.
Additional bitmap files are required in order to represent the device by an icon in the network design software.
Every device is allocated an identity code by the PROFIBUS User Organisation (PNO). This appears in the device data base file name (.gsd).

The Prosonic M has the ID number 0x152C(hex) = 5420 (dec).

Sources of supply

- Internet (ftp-Server): ftp://194.196.152.203/pub/communic/gsd
- CD-ROM with GSD files for all E+H devices. Order-Code: 50097200
- GSD library of the PROFIBUS User Organisation (PNO):http: //www.PROFIBUS.com

Directory structure

The files are organized in the following structure:

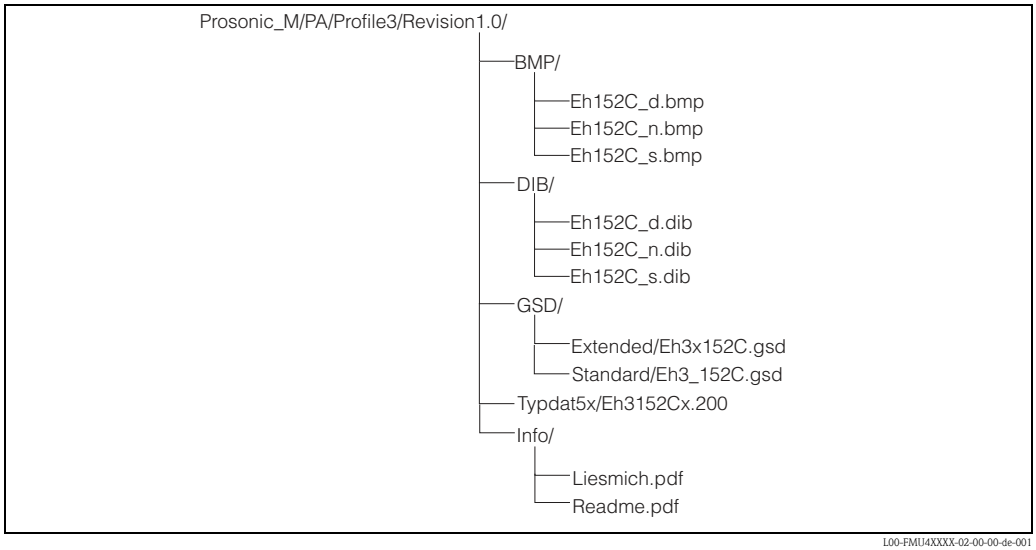

- The GSD files in the directory "Extended" are needed for the network design software STEP 7 of the S7-300/400 PLC family.
- The GSD files in the directory "Standard" are used for PLCs, which do not support an identifier format but only an identifier byte (e.g. PLC5 of Allen-Bradley)
- For the network design tool COM ET200 with Siemens S5 instead of an GSD file the Type file "EH_152Cx.200" and instead of the BMP files the DIB files have to be used.

Universal Database File

As an alternative to the device specific GSD file, the PNO provides an universal database file with the designation PA139700.gsd for devices with one analogue input block. This file supports the transmission of the main value. Transmission of a second cyclic value or a display value is not supported.
When the universal database is used, the option **"profile"** must be selected in the function **"Ident number" (061)**.

5.3.4 Cyclic data exchange

Block model of the Prosonic M

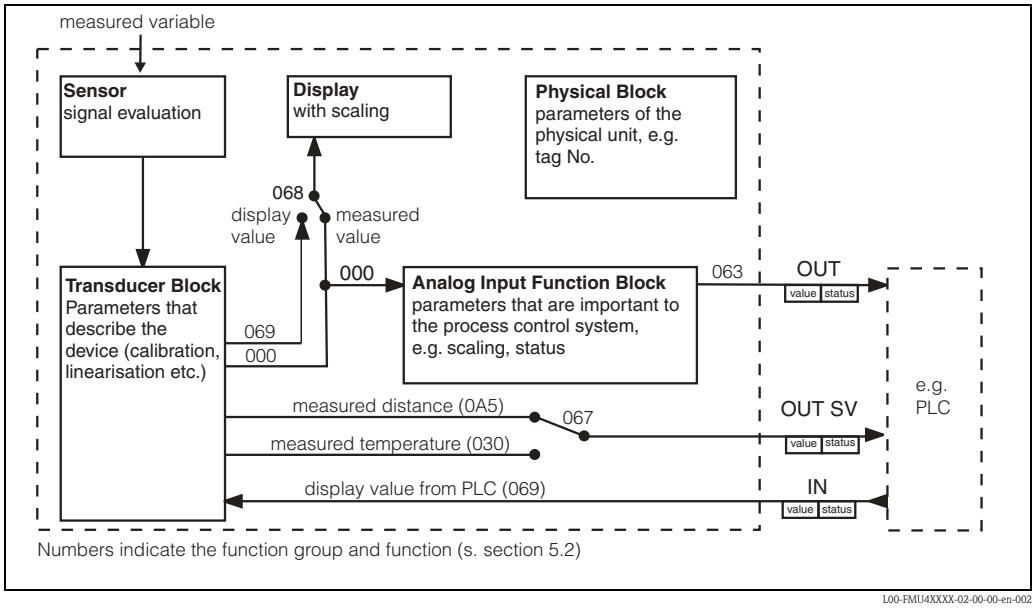

The block model shows, which data are exchanged continously (i.e. by cyclic data transfer) between the Prosonic M and the PLC. The numbers refer to the function groups and functions.

- After linearization and integration in the transducer block the **"measured value"(000)** is transmitted to the Analog-Input Block. There, it may be scaled and checked for limit transgression, and is written out to the PLC. The parameters of the Analog-Input Block are not available when operating via ToF Tool.
- The function **"select V0H0" (068)** determines, if the main value, or a read in value from the PLC is shown on the display in the field for the main value.
- The function **"second cyclic value" (067)** determines, if the **"measured distance" (0A5)** or the **"measured temperature" (030)** is transmitted as the second cyclic value.

Modules for the cyclic data telegram

For the cyclic data telegram the Prosonic provides the following modules:

1. **Main Process Value**
   This is the main measured value scaled by the Analog Input Block (063).
2. **2nd Cyclic Value**
   This is the measured distance between the sensor mebrane and the product surface (0A5) or the measured temperature (030).
3. **Display Value**
   This is a value which can be transferred from the PLC to the Prosonic M in order to be shown on the display.
4. **FREE PLACE**
   This module must be applied during configuration (see below), if the 2nd cyclic value or the display value are not to appear in the data telegram.

Configuration of the cyclic data telegram

Use the configuration software of your PLC in order to compose the data telegram from these modules in one of the following ways:

1. **Main value**
   In order to transmit the main measured value, selct the module **Main Process Value**.
2. **Main value and second cyclic value**
   In order to transmit the main value and the second cyclic value (temperature or measured distance), select the modules in the following order: **"Main Process Value"**, **"2nd Cyclic Value"**, **"FREE PLACE"**.
3. **Main value and display value**
   In order to transmitt the main value and to receive a display value select the modules in the following order: **"Main Process Value"**, **"FREE PLACE"**, **"Display Value"**.
4. **Main value, second cyclic value and display value**
   In order to transmit the main value and the second cyclic value and to receive a display value, select the modules in the following order: **"Main Process Value"**, **"2nd Cyclic Value"**, **"Display Value"**.

The exact way of performing the configuration depends on the configuration software of the PLC.

Structure of the input data (instrument -> SPS)

The input data are transmitted according to the following structure:

Index Input data	Data	Access	Format/Remarks
0, 1, 2, 3	Main value (level)	read	32 bit floating point number (IEEE-754)
4	Status code for main value	read	see. "Status codes"
5, 6, 7, 8 (optional)	Secondary value (measured distance)	read	32 bit floating point number (IEEE-754)
9 (optional)	Status code for secondary value	read	s. "Status codes"

Structure of the output data (SPS Æ Prosonic M)

The output data are transmitted according to the following structure:

Index Output data	Data	Access	Format/Remarks
0, 1, 2, 3	Display value	write	32 bit floating point number (IEEE-754)
4	Status code for Display value	write	s. "Status codes"

IEEE-754 Floating Point Number

The measured value is transmitted as a IEEE 754 floating point number, whereby:
Measured value = $(-1)^{VZ}$ x $2^{(E-127)}$ x (1+F)

Byte 1								Byte 2							
Bit 7	Bit 6	Bit 5	Bit 4	Bit 3	Bit 2	Bit 1	Bit 0	Bit 7	Bit 6	Bit 5	Bit 4	Bit 3	Bit 2	Bit 1	Bit 0
Sign	2^7	2^6	2^5	2^4	2^3	2^2	2^1	2^0	2^{-1}	2^{-2}	2^{-3}	2^{-4}	2^{-5}	2^{-6}	2^{-7}
	Exponent (E)							Mantissa (F)							

Byte 3								Byte 4							
Bit 7	Bit 6	Bit 5	Bit 4	Bit 3	Bit 2	Bit 1	Bit 0	Bit 7	Bit 6	Bit 5	Bit 4	Bit 3	Bit 2	Bit 1	Bit 0
2^{-8}	2^{-9}	2^{-10}	2^{-11}	2^{-12}	2^{-13}	2^{-14}	2^{-15}	2^{-16}	2^{-17}	2^{-18}	2^{-19}	2^{-20}	2^{-21}	2^{-22}	2^{-23}
Mantissa (F)															

Example:

40 F0 00 00 (hex) = 0**100 0000 1**111 0000 0000 0000 0000 0000 (bin)
$= (-1)^0 \times 2^{(129-127)} \times (1 + 2^{-1} + 2^{-2} + 2^{-3})$
$= 1 \times 2^2 \times (1 + 0.5 + 0.25 + 0.125)$
$= 1 \times 4 \times 1.875$
$= 7.5$

Stauts codes

The status codes comprise one byte and have got the following meaning:

Status-Code	**Device status**	**Significance**	**Primary value**	**Secondary value**
0C Hex	BAD	device error		X
0F Hex	BAD	device error	X	
1F Hex	BAD	out-of-service (target mode)	X	
40 Hex	UNCERTAIN	non-specific		X
47 Hex	UNCERTAIN	last usable value (Fail-safe-Mode aktiv)	X	
4B Hex	UNCERTAIN	Substitute set (fail-Safe mode active)	X	
4F Hex	UNCERTAIN	initial value (fail-Safe mode active)	X	
5C Hex	UNCERTAIN	Configuration error (limits not set correctly)	X	
80 Hex	GOOD	OK	X	X
84 Hex	GOOD	Active block alarm (static revision counter incremented)	X	
89 Hex	GOOD	LOW_LIM (alarm active)	X	
8A Hex	GOOD	HI_LIM (alarm active)	X	
8D Hex	GOOD	LOW_LOW_LIM (alarm active)	X	
8E Hex	GOOD	HI_HI_LIM (alarm active)	X	

If a stauts other than "GOOD" is sent to the device, the display indicates an error.

5.3.5 Acyclic data exchange

Acyclic data exchange allows device parameters to be changed independently of the communication between the device and a PLC.
Acyclic data exchange is used
- to transmit device parameters during commissioning and maintenance;
- to display measured values that are not acquired in cyclic traffic.

There are two types of acyclic data exchange:

Acyclic communication with a Class 2 master (MS2AC)

In the case of MS2AC, a Class 2 master opens a communication channel via a so-called service access point (SAP) in order to access the device. Class 2 masters are for example:
- FieldCare
- PDM

Before data can be exchanged via PROFIBUS, however, the Class 2 master must be made aware of the parameters contained within the field device. This can be done by:
- a device description (DD)
- a device type manager (DTM)
- a software component within the master, which accesses the parameters via slot and index addresses.



Note!
- The DD or DTM is supplied by the device manufacturer.
- The number of Class 2 masters that can simultaneously access a device, is determined by the number of SAPs that the device can provide.
- The use of a Class 2 master increases the cycle time of the bus system. This must be taken into consideration when the control system or PLC is programmed.

Acyclic communication with a Class 1 master (MS1AC)

In the case of MS1AC, a Class 1 master that is already communicating cyclically with a device opens a communication channel via SAP 0x33, a special access point for MS1AC. As is the case for a Class 2 master, the parameter is read or written via the slot and index.



Note!
- At the time of writing, there are only a few PROFIBUS masters that support this type of communication.
- Not all PROFIBUS field devices support MS1AC.



Caution!
Permanent writing of parameters, e.g. with every cycle of the application program, must be avoided, since this can drastically reduce the life of the device.
Acyclic write parameters are stored electrically in the RAM (EEPROM, Flash, ...). The RAM modules are design for a limited number of write operations only. In standard operation without MS1AC, i.e. during parametrisation of the device, the number of write operations is negligible when compared to the limit. If the application program is badly designed, however, this limit can be reached quickly, and the RAM will fail.
The Prosonic M supports MS2AC communication with two SAP´s. The Prosonic M does not support MS1AC communication.

5.3.6 Slot/index tables

Device management

Parameter	E+H Matrix (CW II)	Slot	Index	Size [bytes]	Type	Read	Write	Storage Class
Directory object header		1	0	12	Array of UNSIGNED16	X		constant
Composite list directory entries		1	1	24	Array of UNSIGNED16	X		constant
GAP Directory continuous		1	2-8					
GAP reserved		1	9-15					

Analog Input Block

Parameter	E+H Matrix (CW II)	Slot	Index	Size [bytes]	Type	Read	Write	Storage Class
Standard parameters								
Block Data		1	16	20	DS-32*	X		constant
Static revision		1	17	2	UNSIGNED16	X		non-vol.
Device tag		1	18	32	OSTRING	X	X	static
Strategy		1	19	2	UNSIGNED16	X	X	static
Alert key		1	20	1	UNSIGNED8	X	X	static
Target Mode		1	21	1	UNSIGNED8	X	X	static
Mode		1	22	3		X		dynamic non-vol. constant
Alarm summary		1	23	8		X		dynamic
Batch		1	24	10		X	X	static
Gap		1	25					
Block parameters								
Out		1	26	5	DS-33*	X		dynamic
PV Scale		1	27	8	Array of FLOAT	X	X	static
Out Scale		1	28	11	DS-36*	X	X	static
Linearisation type		1	29	1	UNSIGNED8	X	X	static
Channel		1	30	2	UNSIGNED16	X	X	static
Gap		1	31					
PV fail safe time		1	32	4	FLOAT	X		non-vol.
Fail safe type		1	33	1	UNSIGNED8	X	X	static
Fail safe value		1	34	4	FLOAT	X	X	static
Alarm Hysteresis		1	35	4	FLOAT	X	X	static
Gap		1	36					
HI HI Limit		1	37	4	FLOAT	X	X	static
Gap		1	38					
HI Limit		1	39	4	FLOAT	X	X	static
Gap		1	40					
LO Limit		1	41	4	FLOAT	X	X	static

Parameter	E+H Matrix (CW II)	Slot	Index	Size [bytes]	Type	Read	Write	Storage Class
Gap		1	42					
LO LO Limit		1	43	4	FLOAT	X	X	static
Gap		1	44-45					
HI HI Alarm		1	46	16	DS-39*	X		dynamic
HI Alarm		1	47	16	DS-39*	X		dynamic
LO Alarm		1	48	16	DS-39*	X		dynamic
LO LO Alarm		1	49	16	DS-39*	X		dynamic
Simulate		1	50	6	DS-51*	X	X	non-vol.
Out unit text		1	51	16	OSTRING	X	X	static
Gap reserved		1	52-60					

Physical Block

Parameter	E+H Matrix (CW II)	Slot	Index	Size [bytes]	Type	Read	Write	Storage Class
Standard parameters								
Block Data		0	16	20	DS-32*	X		constant
Static revision		0	17	2	UNSIGNED16	X		non-vol.
Device tag		0	18	32	OSTRING	X	X	static
Strategy		0	19	2	UNSIGNED16	X	X	static
Alert key		0	20	1	UNSIGNED8	X	X	static
Target mode		0	21	1	UNSIGNED8	X	X	static
Mode		0	22	3	DS-37*	X		dynamic non-vol. constant
Alarm summary		0	23	8	DS-42*	X		dynamic
Block parameters								
Software revision		0	24	16	OSTRING	X		constant
Hardware revision		0	25	16	OSTRING	X		constant
Device manufacturer ID		0	26	2	UNSIGNED16	X		constant
Device ID		0	27	16	OSTRING	X		constant
Device serial number		0	28	16	OSTRING	X		constant
Diagnosis		0	29	4	OSTRING	X		dynamic
Diagnosis extension		0	30	6	OSTRING	X		dynamic
Diagnosis mask		0	31	4	OSTRING	X		constant
Diagnosis mask ext.		0	32	6	OSTRING	X		constant
Device certification		0	33	32	OSTRING	X	X	non-vol.
Security locking		0	34	2	UNSIGNED16	X	X	non-vol.
Factory reset		0	35	2	UNSIGNED16		X	non-vol.
Descriptor		0	36	32	OSTRING	X	X	static
Device message		0	37	32	OSTRING	X	X	static
Device instal. date		0	38	8	OSTRING	X	X	static
Gap reserved		0	39					
Ident number select		0	40	1	UNSIGNED8	X	X	static

Parameter	E+H Matrix (CW II)	Slot	Index	Size [bytes]	Type	Read	Write	Storage Class
HW write protection		0	41	1	UNSIGNED8	X	X	static
Gap reserved		0	42-48					
Gap		0	49-53					
E+H parameters								
error code		0	54	2	UNSIGNED16	X		dynamic
last error code		0	55	2	UNSIGNED16	X	X	dynamic
Up Down features		0	56	1	OSTRING	X		constant
Up Down control		0	57	1	UNSIGNED8		X	dynamic
Up Down param		0	58	20	OSTRING	X	X	dynamic
Bus address		0	59	1	UNSIGNED8	X		dynamic
Device SW No.		0	60	2	UNSIGNED16	X		dynamic
set unit to bus		0	61	1	UNSIGNED8	X	X	static
input value		0	62	6	FLOAT+U8+U 8	X		dynamic
Select Main value		0	63	1	UNSIGNED8	X	X	dynamic
PA profile revision		0	64	16	OSTRING	X		constant
Gap		0	65-69					
Gap reserved		0	119-125					

E+H specific level transducer block

Parameter	E+H Matrix (CW II)	Slot	Index	Size [bytes]	Type	Read	Write	Storage Class
Standard parameters								
Block data		1	130	20	DS-32*	X		constant
Static revision		1	131	2	UNSIGNED16	X		non-vol.
Device tag		1	132	32	OSTRING	X	X	static
Strategy		1	133	2	UNSIGNED16	X	X	static
Alert key		1	134	1	UNSIGNED8	X	X	static
Target mode		1	135	1	UNSIGNED8	X	X	static
Mode		1	136	3	DS-37*	X		dynamic non-vol. static
Alarm summary		1	137	8	DS-42*	X		dynamic
E+H parameters								
Measured value	V0H0	1	138	4	FLOAT	X		dynamic
tank shape	V0H2	1	140	1	UNSIGNED8	X	X	static
medium cond.	V0H3	1	141	1	UNSIGNED8	X	X	static
process cond.	V0H4	1	142	1	UNSIGNED8	X	X	static
empty calibration	V0H5	1	143	4	FLOAT	X	X	static
full calibration	V0H6	1	144	4	FLOAT	X	X	static
output on alarm	V1H0	1	148	1	UNSIGNED8	X	X	static
outp. echo loss	V1H2	1	150	1	UNSIGNED8	X	X	static
ramp %span/min	V1H3	1	151	4	FLOAT	X	X	static

Parameter	E+H Matrix (CW II)	Slot	Index	Size [bytes]	Type	Read	Write	Storage Class
delay time	V1H4	1	152	2	UNSIGNED16	X	X	static
safety distance	V1H5	1	153	4	FLOAT	X	X	static
in safety dist.	V1H6	1	154	1	UNSIGNED8	X	X	static
ackn. alarm	V1H7	1	155	1	UNSIGNED8	X	X	static
measured temp.	V2H0	1	158	1	UNSIGNED8	X	X	static
max. temp. limit	V2H1	1	159	1	UNSIGNED8	X	X	static
max. meas. temp.	V2H2	1	160	1	UNSIGNED8	X	X	static
on high temp.	V2H3	1	161	1	UNSIGNED8	X	X	static
def. temp. sens.	V2H4	1	162	2	ENUM	X	X	static
level/ullage	V3H0	1	168	1	UNSIGNED8	X	X	static
linearisation	V3H1	1	169	1	UNSIGNED8	X	X	static
customer unit	V3H2	1	170	2	UNSIGNED16	X	X	static
table no.	V3H3	1	171	1	UNSIGNED8	X	X	static
input level	V3H4	1	172	4	FLOAT	X	X	static
input volume	V3H5	1	173	4	FLOAT	X	X	static
max. scale	V3H6	1	174	4	FLOAT	X	X	static
diameter vessel	V3H7	1	175	4	FLOAT	X	X	static
check distance	V4H1	1	179	1	UNSIGNED8	X	X	static
range of mapping	V4H2	1	180	4	FLOAT	X	X	static
start mapping	V4H3	1	181	1	UNSIGNED8	X	X	static
pres. map. dist.	V4H4	1	182	4	FLOAT	X		dynamic
cust. Tank map	V4H5	1	183	1	UNSIGNED8	X	X	static
echo quality	V4H6	1	184	1	UNSIGNED8	X		dynamic
offset	V4H7	1	185	4	FLOAT	X	X	static
output damping	V4H8	1	186	4	FLOAT	X	X	static
blocking dist.	V4H9	1	187	4	FLOAT	X	X	static
instrument_addr.	V5H0	1	188	1	UNSIGNED8	X		dynamic
ident number	V5H1	1	189	1	UNSIGNED8	X	X	static
set unit to bus	V5H2	1	190	1	UNSIGNED8	X	X	static
out value	V5H3	1	191	4	FLOAT	X		dynamic
out status	V5H4	1	192	1	UNSIGNED8	X		dynamic
simulation	V5H5	1	193	1	UNSIGNED8	X	X	static
simulation value	V5H6	1	194	4	FLOAT	X	X	static
2nd cyclic value	V5H7	1	195	1	UNSIGNED8	X	X	static
select V0H0	V5H8	1	196	1	UNSIGNED8	X	X	static
display value	V5H9	1	197	4	FLOAT	X		dynamic
display contrast	V6H1	1	199	1	UNSIGNED8	X	X	static
language	V6H2	1	200	1	UNSIGNED8	X	X	static
back to home	V6H3	1	201	2	INT16	X	X	static
format display	V6H4	1	202	1	UNSIGNED8	X	X	static
no. decimals	V6H5	1	203	1	UNSIGNED8	X	X	static
sep. character	V6H6	1	204	1	UNSIGNED8	X	X	static
display test	V6H7	1	205	1	UNSIGNED8	X	X	static

Parameter	E+H Matrix (CW II)	Slot	Index	Size [bytes]	Type	Read	Write	Storage Class
present error	V9H0	1	228	2	U16	X		dynamic
previous error	V9H1	1	229	2	U16	X		dynamic
clear last error	V9H2	1	230	1	UNSIGNED8	X	X	static
reset	V9H3	1	231	2	UNSIGNED16	X	X	static
unlock parameter	V9H4	1	232	2	UNSIGNED16	X	X	static
measured dist.	V9H5	1	233	4	FLOAT	X		dynamic
measured level	V9H6	1	234	4	FLOAT	X		dynamic
application par.	V9H8	1	236	1	UNSIGNED8	X		dynamic
tag no.	VAH0	1	238	32	STRING	X		const.
profile version	VAH1	1	239	32	STRING	X	X	static
protocol+sw-no.	VAH2	1	240	32	STRING	X		const
serial no.	VAH4	1	242	32	STRING	X	X	static
distance unit	VAH5	1	243	2	UNSIGNED16	X	X	static
temperature unit	VAH6	1	244	2	ENUM	X	X	static
download mode	VAH8	1	246	1	UNSIGNED8	X	X	static

Data strings

In der Slot/Index table some data types, e.g. DS-33 are marked by an asterisk. These are data strings according to the PROFIBUS-PA specifications part 1, Version 3.0. They contain several elements, which are addressed by an additional subindex. The following table gives an example.

Data type	Subindex	Type	Size [bytes]
DS-33	1	FLOAT	4
	5	UNSIGNED8	1

5.3.7 FieldCare operating program

FieldCare is Endress+Hauser's FDT based Plant Asset Management Tool. It can configure all intelligent field devices in your plant and supports you in managing them. By using status information, it also provides a simple but effective means of checking their health.
www.endress.com → select your country → search: FieldCare → FieldCare → Technical Data.

The FieldCare supports the following functions:
- Configuration of transmitters in online operation
- Signal analysis via envelope curve
- Tank linearisation
- Loading and saving of instrument data (Upload/Download)
- Documentation of measuring point

Connection options
- PROFIBUS PA via segment coupler and PROFIBUS interface card
- Commubox FXA291 with ToF Adapter FXA291 (USB) via service interface

Menu-guided commissioning:

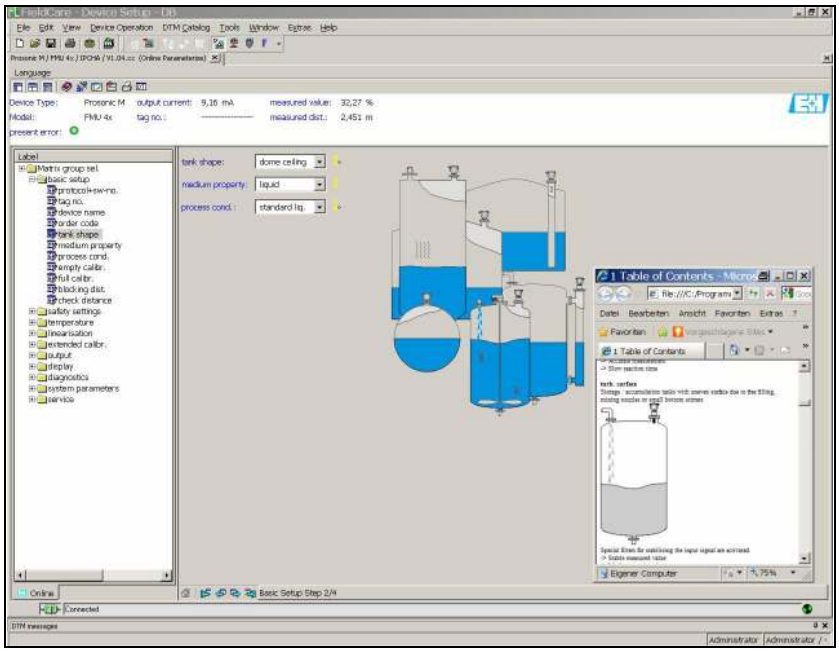

L00-FMU4xxxx-19-00-00-en-021

Signal analysis via envelope curve:

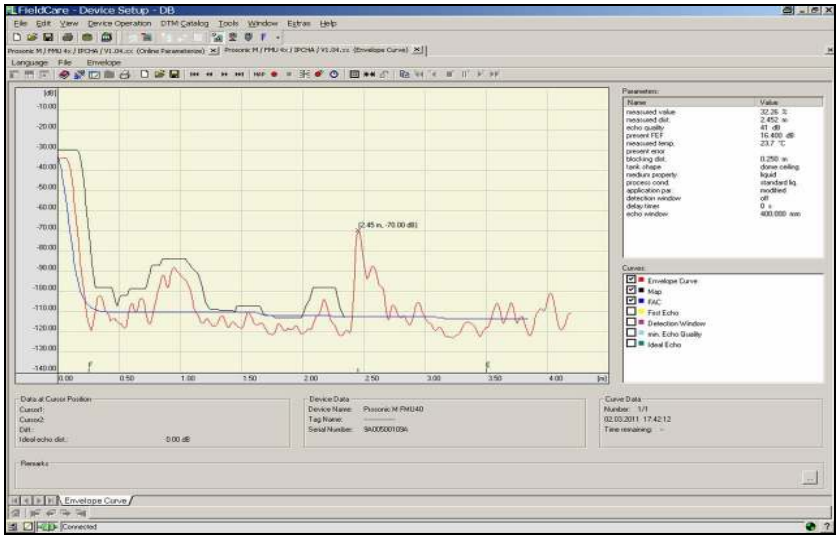

L00-FMU4xxxx-19-00-00-en-022

5.3.8 Scaling of the output data

The on-site display and the digital output are working independently of each other.

On-site display

The on-site display always displayes the main value V0H0 directly from the Transducer Block.

Digital output

For the digital output this value is rescaled in two steps:

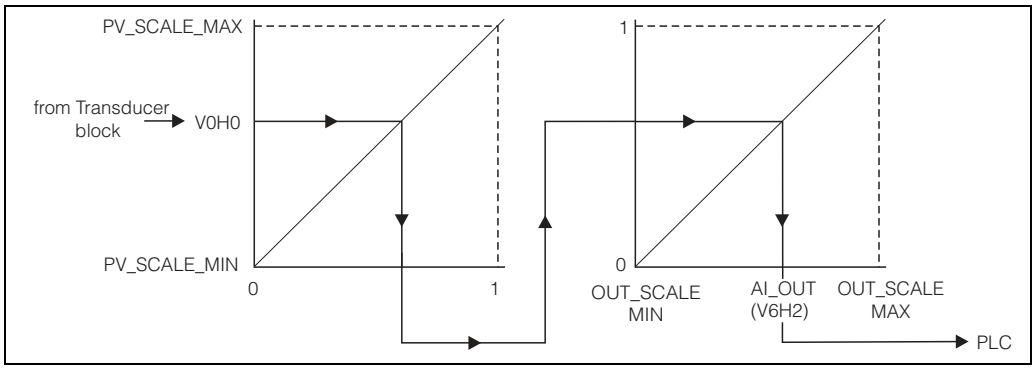

1. In a first step, the main value is mapped to the interval [0;1]. PV_SCALE_MIN and PV_SCALE_MAX determine the limits of this mapping.
2. In a second step, the interval [0.1] is mapped to the interval [OUT_SCALE_MIN, OUT_SCALE_MAX]. The value resulting from this mapping is transfered via V6H2 to the PLC.

Note!
The scaling of the ouptut value is required by the Profibus profiles. It prevents uncontrolled jumps of the output value when one changes the unit of the measuring value in the Transducer Block. If units are changed, PV_SCALE_MIN and PV_SCALE_MAX automatically adapt themselves in such a way that the output value remains unchanged. Only after confirming the change by the "**Set unit to bus**" **(062)** function,
OUT_SCALE_MIN is set equal to PV_SCALE_MIN and
OUT_SCALE_MAX equal to PV_SCALE_MAX.
Thereby the new unit also becomes effective at the output.

Caution!
If a linearisation has been carried out, it must be confirmed by the "**Set unit to bus**" **(062)** function in order to become effective at the digital output.

5.4 Operation using the on-site display VU331

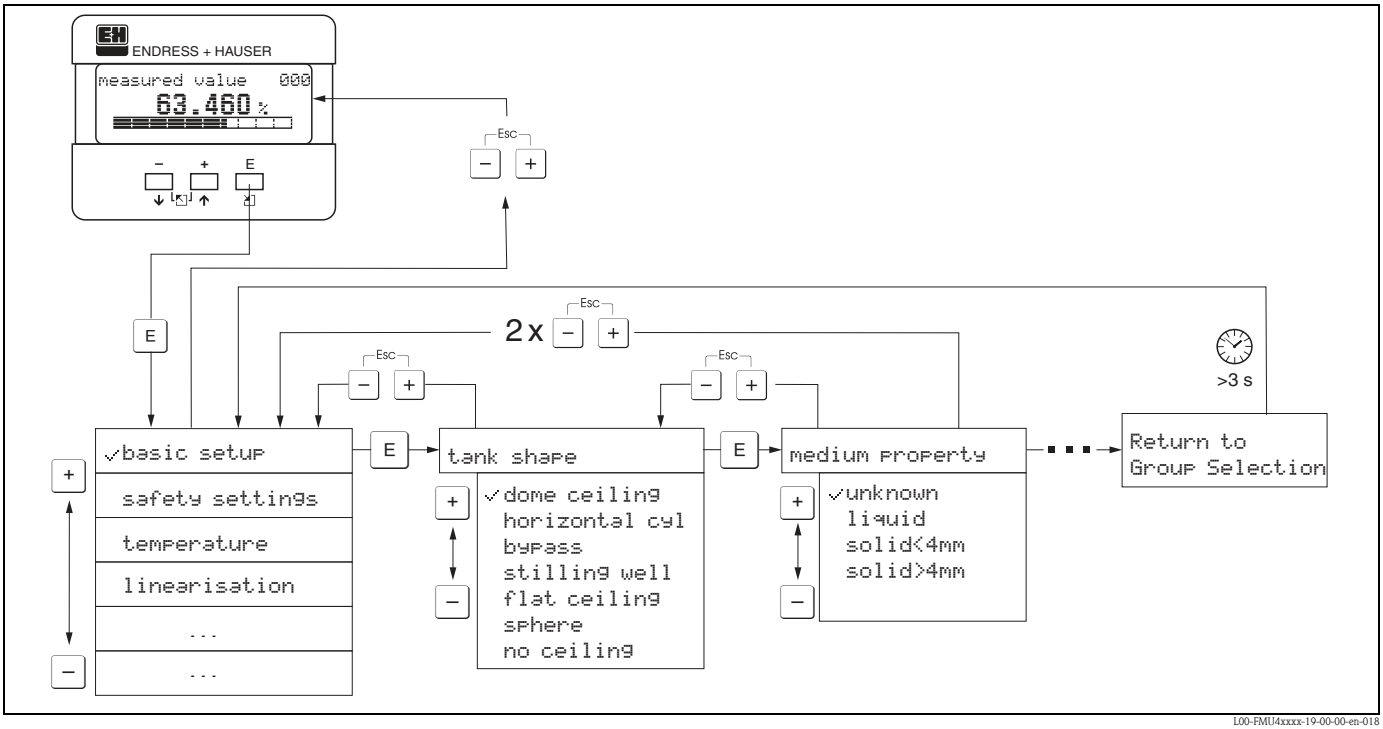

1. Change from Measured Value Display to **Group Selection** by pressing E.
2. Press − or + to select the required **Function Group** and confirm by pressing E.
   The active selection is marked by a ✓ in front of the menu text.
3. Activate Edit mode with + or − .

   Selection menus

   a. Select the required **Parameter** in selected **function** with − oder + .

   b. E confirms selection; ✓appears in front of the selected parameter.

   c. E confirms the edited value; system quits edit mode.

   d. + and − (= ±) interrupts selection; system quits edit mode.

   Typing in numerals and text

   a. Press + or − to edit the first character of the **numeral / text**.

   b. E positions the cursor at the next character; continue with a. until you have completed your input.

   c. If a ↵ symbol appears at the cursor, press E to accept the value entered; system quits edit mode.

   d. If a ← symbol appears at the cursor, press E to return to the previous character (e.g. for correction of entries).

   e. + and − (= ±) interrupts selection; system quits edit mode.
4. Press E to select the next **function**.
5. Press + and − (= ±) once; return to previous **function**.
   Press + and − (= ±) twice; return to **Group Selection**.
6. Press + and − (= ±) to return to **Measured value display**.

5.5 Lock/unlock configuration

5.5.1 Software security locking

Enter a number ≠ 2457 in the **"unlock parameter" (0A4)** function in the **"diagnostics" (0A)** function group.
The symbol appears on the display. Inputs are no longer possible.

If you try to change a parameter, the device jumps to the **"unlock parameter" (0A4)** function.
Enter "2457"
Now change the parameters.

5.5.2 Hardware security locking

Press −, + and E simultaneously.
Inputs are no longer possible.

If you try to change a parameter, the following appears:

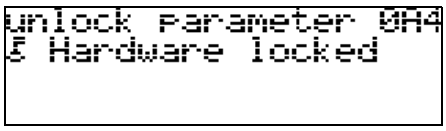

L00-fmrxf0a4-20-00-00-de-001

Press −, + and E simultaneously. The **"unlock parameter" (0A4)** function appears.
Enter "2457"
Now change the parameters.

Note!
A hardware locking can **only** be unlocked again via the display by pressing the +, − and E keys at the same time again. It is **not** possible to unlock the hardware by communication.

5.6 Resetting the customer parameters

It is advisable to reset the customer parameters if you want to use a device with an unknown history.

Effects of resetting:
- All customer parameters are reset to their default values.
- Customer interference echo suppression is **not** deleted.
- Linearisation is switched to **"linear"**, but the table values are kept. The table can be switched back on in the **"linearisation" (04)** function group in the **"linearisation" (041)** function.

In order to carry out the reset, enter the number "33333" in the **"reset" (0A3)** function in the **"diagnostics" (0A)** function group.

Caution!
A reset may lead to impairment of the measurement. As a rule, a basic calibration is required after a reset.

Note!
The default values of each parameter are shown in bold in the menu overview in the appendix.

Note!
5-point linearity protocol
The specified measuring accuracy is a typical value → 76, "Performance characteristics".
With the production of the 5-point linearity protocol the measuring system (sensor and electronic) is adjusted exactly to one another and the measuring accuracy is optimized for the specified range. To realize this, the parameter "zero distance" is fine adjusted. After a reset the value for the zero distance has to be re-parameterized in the service menu according to the data on the associated 5-point linearity protocol. Please contact the Endress+Hauser service.

5.7 Resetting an interference echo suppression (tank map)

It is always advisable to reset the interference echo suppression (tank mapping) when:
- a device with an unknown history is used
- an incorrect suppression was input.

Proceed as follows:

1. Switch to the **"extended calibr." (05)** function group and to the **"selection" (050)** function.
2. Select **"extended map."**
3. Then proceed to the **"cust. tank map" (055)** function.
4. Select
   – **"reset"**, to delete (reset) the existing interference echo suppression.
   – **"inactive"** to deactivate an existing interference echo suppression. The suppression remains saved.
   – **"active"** to reactivate an existing interference echo suppression.

6 Commissioning

Commission the Prosonic M in the following stages:
- Installation check
- Power-up device
- Basic calibration
- Measuring signal check using the envelope curve

The chapter describes the commissioning process using the on-site display. Commissioning using FieldCare is identical.

6.1 Function check

Make sure that all final checks have been completed before you start up your measuring point:
- Checklist “Post installation check” (→ 26).
- Checklist “Post connection check” (→ 30).

6.2 Power up instrument

After switching on the supply voltage, the instrument is first initialised.
Then the following appear for approximately five seconds:

- Device type
- Software version

Press E to exit this display.

On first power-up, you are requested to select the language for the display texts. Available language:

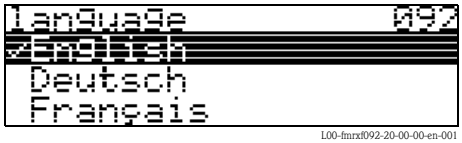

L00-fmrxf092-20-00-00-en-001

- English
- Deutsch
- Français
- Español
- Italiano
- Nederlands
- Japanese

Then you are requested to select the unit of length for your measurements. Available unit of length:



L00-fmrxf0c5-20-00-00-en-001

- m
- ft
- mm
- inch

A measured value is displayed. This is NOT equivalent to the level in your tank. Firstly carry out a basic calibration.

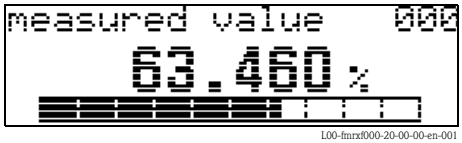

L00-fmrxf000-20-00-00-en-001

Press E to switch to the group selection.
Press E again to start the basic calibration.

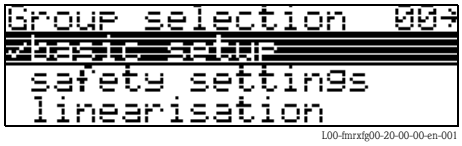

L00-fmrxfg00-20-00-00-en-001

6.3 Basic calibration

The **"Basic setup" (00)** function group lists all the functions which are required for a standard measurement task to commission the Prosonic M. When you have completed your input for a function, the next function appears automatically. In this way, you are guided through the complete calibration.

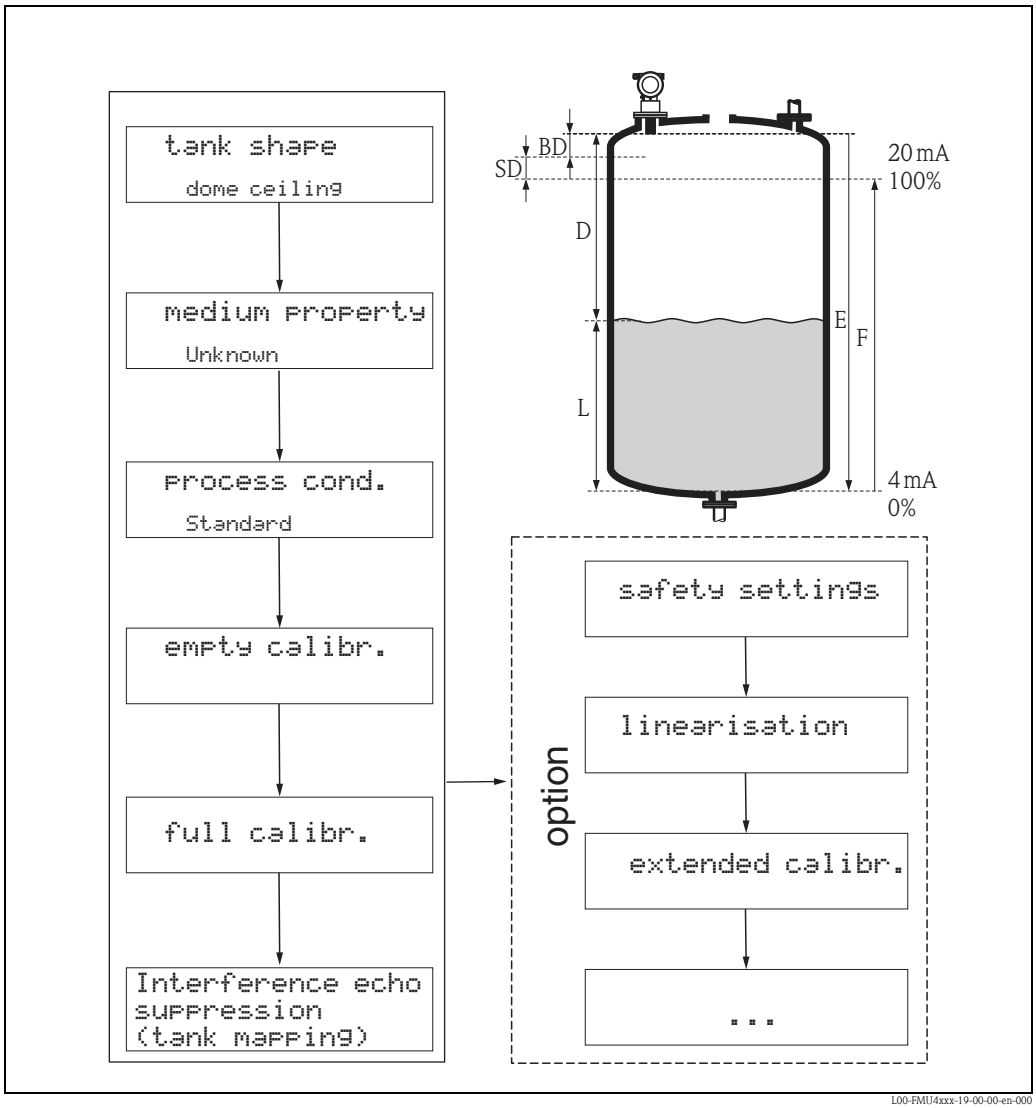

D Distance (distance from the sensor membrane (= reference point of the measurement) / product)
E Empty calibr. (= zero point)
F Full calibr. (= span)
L Level
BD Block distance
SD Safety distance

6.3.1 Measuring point settings

Function "tank shape" (002)

In this function, select one of the following options:

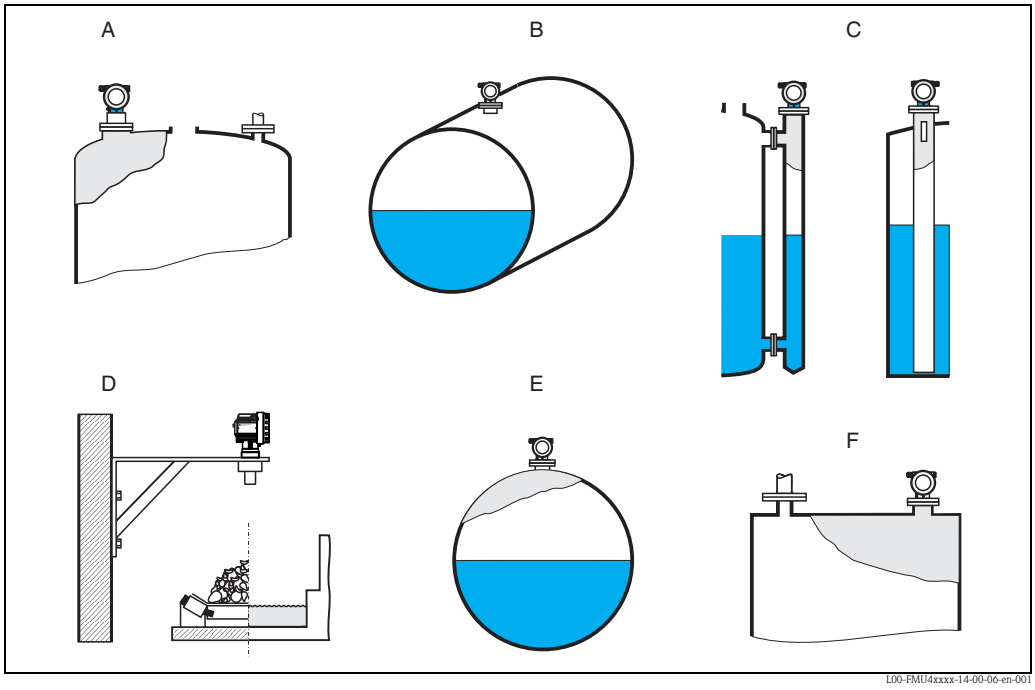

A *Dome ceiling*
B *Horizontal cyl*
C *Bypass, stilling well/ultrasonic guide pipe*
D *No ceiling, e.g. dumps, open levels, chanels, weirs*
E *Sphere*
F *Flat ceiling*

Function "medium property" (003)

Set the medium type in this function.

You have the following options:
- unknown (e.g. pasty media such as greases, creams, gels etc.)
- liquid
- solid, grain size < 4mm, (fine)
- solid, grain size > 4mm, (coarse)

Function "process conditions" (004)

For this function, you have the following options:

standard liquids	calm surface	turb. surface
For all fluid applications which do not fit in any of the following groups	Storage tanks with immersion tube or bottom filling	Storage / accumulation tanks with uneven surface due to free filling, mixing nozzles or small bottom stirrers
	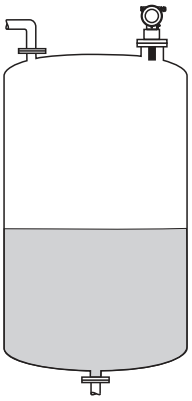 L00-FMU4xxxx-14-00-00-xx-001	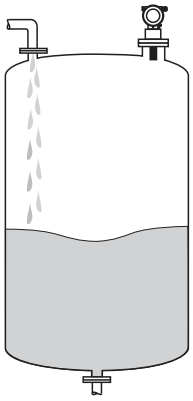 L00-FMU4xxxx-14-00-00-xx-002
The filters and output damping are set to average values.	The averaging filters and output damping are set to large values. -> Stable measured value -> Accurate measurement -> Slow reaction time	Special filters for stabilising the input signal are activated. -> Stable measured value -> Medium reaction time

add. agitator	fast change	standard solid
Moving surfaces (poss. with vortex formation) due to agitators	Rapid level change, particularly in small tanks	For all bulk solids applications which do not fit in any of the following groups
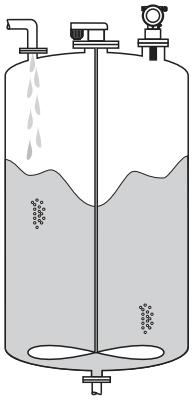 L00-FMU4xxxx-14-00-00-xx-003	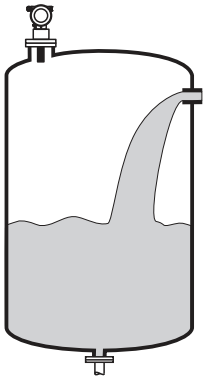 L00-FMU4xxxx-14-00-00-xx-004	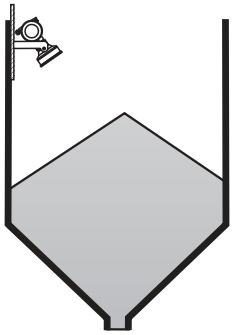 L00-FMU4xxxx-14-00-00-xx-006
Special filters for stabilising the input signal are set to large values. -> Stable measured value -> Medium reaction time	The averaging filters are set to small values. -> Rapid reaction time -> Possibly unstable measured value	The filter and output damping are set to average values.

solid dusty	conveyor belt	Test: no filter
Dusty bulk solids	Bulk solids with rapid level change	All the filters can be switched off for purposes of service and diagnosis
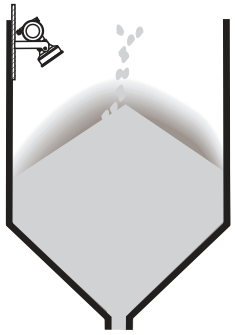 L00-FMU4xxxx-14-00-00-xx-007	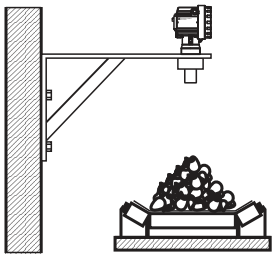 L00-FMU4xxxx-14-00-00-xx-005	
The filters are set to detect even relatively weak signals.	The averaging filters are set to small values. -> Rapid reaction time Possibly unstable measured value	All filters off

6.3.2 Empty and full calibration

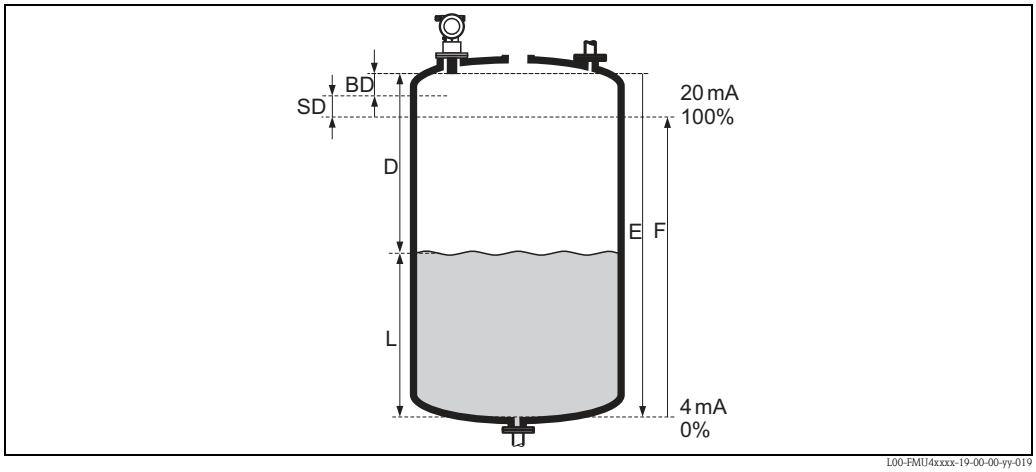

L00-FMU4xxxx-19-00-00-yy-019

BD Blocking distance
SD Safety distance
E Empty calibration (= zero point)
F Full calibration (= span)
D Nozzle diameter
L Level

Function "empty calibration" (005)

In this function, enter the distance E from the sensor membrane to the minimum level (zero point).

Caution!
With dished boiler heads or conical outflows, the zero point should not be deeper than the point at which the ultrasonic wave impinges on the tank bottom.

Function "blocking distance" (059)

In this function the blocking distance (BD) of the sensor is displayed.

Caution!
When entering the full calibration (span), please take into account, that the maximum level may not project into the blocking distance (BD)

Note!
After basic calibration, enter a safety distance (SD) in the **"safety distance" (015)** function. If the level is within this safety distance, the Prosonic M signals a warning or an alarm, depending on your selection in the **"in safety distance" (016)** function.

Function "full calibration" (006)

In this function, enter the span F, i.e. the distance from the minimum level to the maximum level.

6.3.3 Interference echo suppression (tank mapping)

Function "dist./measured value" (008)

In the **"dist./meas.value" (008)** function, the measured distance D from the sensor membrane to the product surface is displayed together with level L. Check these values.

Function "check distance" (051)

The mapping is initialized by this function.

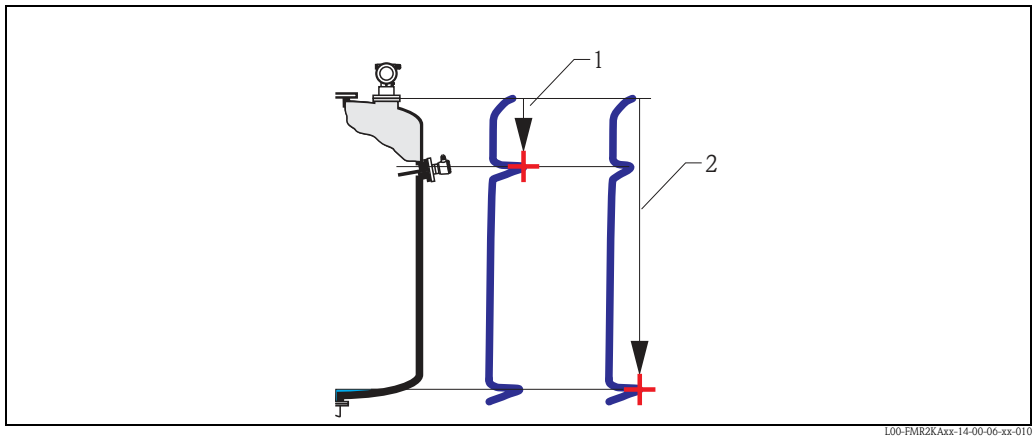

1 Distance too small
2 Distance = ok

Select
- **"distance=ok"** if the correct distance is displayed. Any echoes closer to the sensor will be suppressed by the following interference echo suppression.
- **"dist. too small"** if the displayed distance is too small. In this case, the signal comes from an interference echo which will be suppressed.
- **"dist. too big"** if the displayed distance is too large. This error cannot be cancelled by suppressing the interference echo. This means that the following two functions are skipped. Check the application parameters **"tank shape" (002)**, **"medium proerty" (003)** and **"process cond." (004)** and the **"empty calibr."(005)** in the **"basic setup" (00)** function group.
- **"dist. unknown"** if you do not know the actual distance. This means that the following two functions are skipped.
- **"manual"** if you want to specify the suppression area yourself in the following function.

Function "range of mapping" (052)

The suggested suppression area is displayed in this function. The reference point is always the sensor membrane. You can still edit the value. With manual suppression, the default value is 0 m.

Caution!
The suppression range must end 0.5 m (1.6 ft) in front of the echo of the actual level. With an empty tank, do not enter E but E – 0.5 m.

Function "start mapping" (053)

You have the following options for this function:
- **off**: Nothing is suppressed.
- **on**: Starts suppression.



Note!
If a mapping already exists, it will be overwritten up to the distance specified in the **"range of mapping" (052)** function. Beyond this distance the existing mapping remains unchanged.

Function dist./measured value (008)

After suppression, the measured distance D from the sensor membrane to the product surface is displayed together with the level. Check that the values correspond to the actual level and/or the actual distance.

The following cases may occur:
- Distance correct – Level correct -> End of basic calibration
- Distance incorrect – Level incorrect -> An additional interference echo suppression must be carried out. Go back to the **"check distance" (051)** function.
- Distance correct – Level incorrect -> Check the value of the **"empty calibr." (005)** function.

Return to group selection

After the mapping has been recorded the basic calibration is completed and the device automatically returns to the group selection.

6.4 Envelope curve

After the basic setup, an evaluation of the measurement with the aid of the envelope curve ("**envelope curve**" **(0E)** function group) is recommended.

6.4.1 Funxtion "plot settings" (0E1)

In this function, select whether you want to display
- just the envelope curve
- The envelope curve and the echo evaluation line FAC
- The envelope curve and interference echo suppression (map)

Note!
The FAC and the interference echo suppression (map) are explained in BA00240F "Prosonic M - Description of Instrument Functions"

6.4.2 Function "recording curve" (0E2)

In this function, specify whether you want to display
- an individual envelope curve
- The current envelope curve, with cyclical refreshment.

6.4.3 Function "envelope curve display" (0E3)

The envelope curve is displayed in this function. You can use it to obtain the following information:

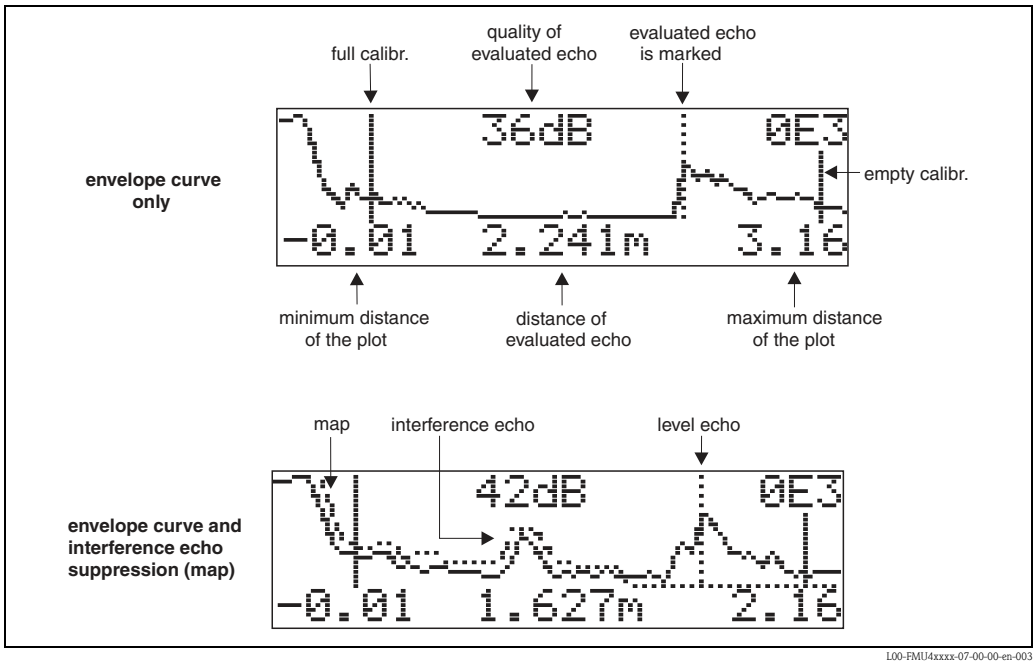

Check that the following conditions are fulfilled:
- The echo quality at the end of measuring range should be at least 10dB.
- There should be practically no interference echoes in front of the level signal.
- If interference echoes cannot be avoided, they must be below the suppression curve.

Note!
If the cyclical envelope curve display is still active on the display, the measured value is updated at a slower cycle time. We therefore advise you to exit the envelope curve display after optimising the measuring point. To do this, press E. (The instrument does not leave the envelope curve display automatically.)

6.4.4 Navigation in the envelope curve display

Using navigation, the envelope curve can be scaled horizontally and vertically and shifted to the left or the right. The active navigation mode is indicated by a symbol in the top left hand corner of the display.

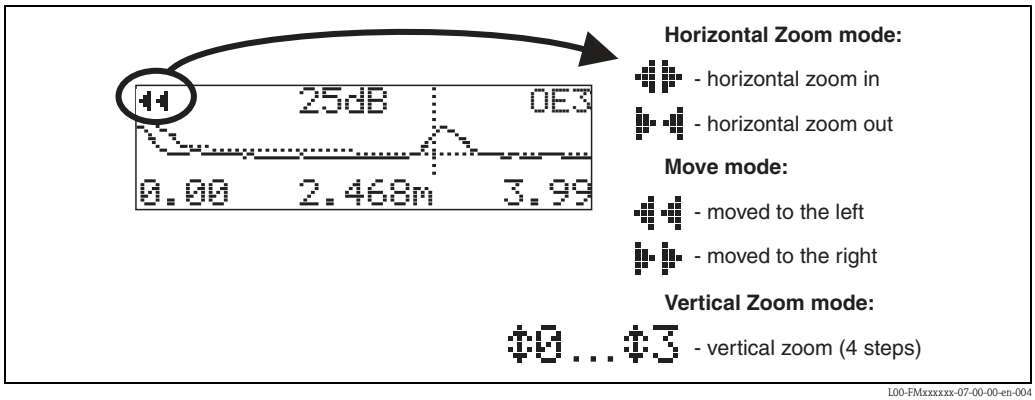

L00-FMxxxxxx-07-00-00-en-004

Horizontal Zoom mode

Firstly, go into the envelope curve display. Then press [+] or [–] to switch to the envelope curve navigation. You are then in Horizontal Zoom mode. Either ◀▶ or ▶◀ is displayed.
- [+] increases the horizontal scale.
- [–] reduces the horizontal scale.

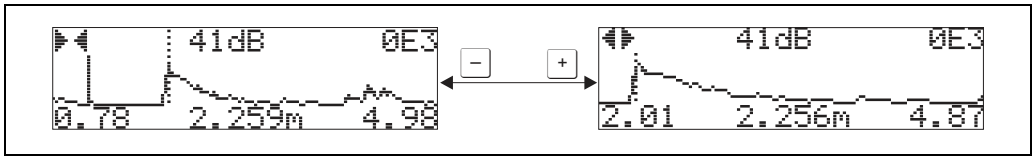

L00-FMxxxxxx-07-00-00-yy-007

Move mode

Then press [E] to switch to Move mode. Either ▶▶ or ◀◀ is displayed.
- [+] shifts the curve to the right.
- [–] shifts the curve to the left.

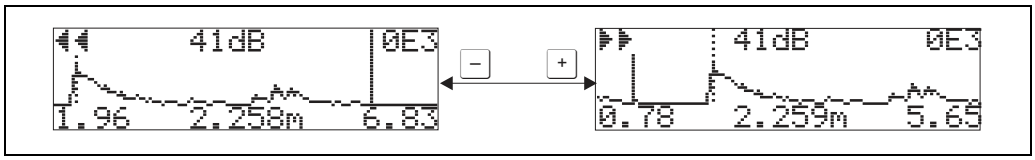

L00-FMxxxxxx-07-00-00-yy-008

Vertical Zoom mode

Press [E] once more to switch to Vertical Zoom mode. ⇕1 is displayed. You now have the following options.
- [+] increases the vertical scale.
- [–] reduces the vertical scale.

The display icon shows the current zoom factor (⇕0 to ⇕3).

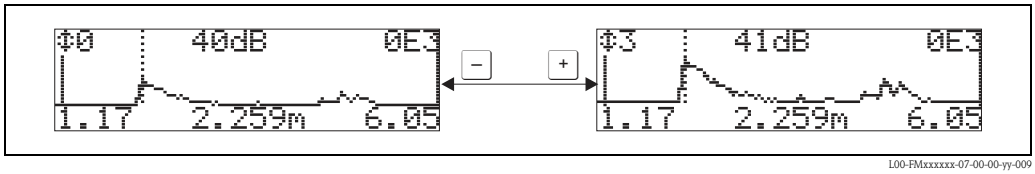

L00-FMxxxxxx-07-00-00-yy-009

Exiting the navigation

- Press [E] again to run through the different modes of the envelope curve navigation.
- Press [+] and [–] to exit the navigation. The set increases and shifts are retained. Only when you reactivate the "**recording curve**" **(0E2)** function the display settings return to their standard values.

7 Troubleshooting

7.1 System error messages

7.1.1 Current error

Errors which the Prosonic M detects during commissioning or operation are displayed:

- In the **"measured value" (000)** function
- In the **"diagnostics" (0A)** function group in the **"present error" (0A0)** function
  Only the highest priority error is displayed; in the case of multiple errors, you can scroll between the different error messages by pressing ⊞ or ⊟.
- by the status of the main value

7.1.2 Last error

The last error is displayed in the **"diagnostics" (0A)** function group in the **"previous error" (0A1)** function. This display can be deleted in the **"clear last error" (0A2)** function.

7.1.3 Types of error

Type of error	Symbol	Meaning
Alarm (A)	 continuous	The output signal assumes a value which can be set using the **"output on alarm" (010)** function: ■ MAX: 110% ■ MIN: -10% ■ Hold: last value is on hold ■ User-specific value
Warning (W)	 flashing	The device continues measurement. An error message is displayed.
Alarm/Warning (E)	You can define whether the error should behave as an alarm or as a warning.	

7.1.4 Error codes

Code	Error description	Action
A102 A110 A152 A160	checksum error	Reset; If alarm still present after reset, replace electronics
W103	initialising	If the message does not disappear after several seconds, replace the electronics
A106	downloading	Wait; Message disappears after load sequence
A111 A113 A114 A115 A121 A125 A155 A164 A171	electronics defect	Reset; Check system for EMC, improve as necessary If alarm still present after reset, replace electronics
A116	download error	Check connection; Restart download
W153	initialising	Wait a few seconds; if error is still displayed, switch the power off and on again
A231	sensor defect	Check connection, if necessary replace HF module or electronics
A281	interruption temperature sensor	Exchange sensor
A502	Sensor type not detected	Exchange sensor and/or electronics
A512	recording of mapping	Alarm disappears after a few seconds
A521	new sensor type detected	Reset
W601	linearisation curve not monotone	Correct table (enter monotonously increasing table)
W611	less than 2 linea-risation points	Enter additional value pairs
W621	simulation on	Switch simulation mode off [**"output" (06)** function group, **"simulation" (065)** function]]
E641	no usable echo	Check basic calibration
E651	level in safety distance - risk of overspill	Error disappears when the level leaves the safety distance. Possibly reset the lock. [**"safety settings" (01)** function group, **"ackn. alarm" (017)** function]]
A661	Sensor overtemperature	
A671	Linearisation incomplete	Activate linearisation table
W681	current out of range	Carry out basic calibration; check linearisation
W691	Filling noise detected, level ramp is active	

7.2 Application errors

Error	Example	Elimination
Measured value (00) is incorrect but measured distance (008) is correct	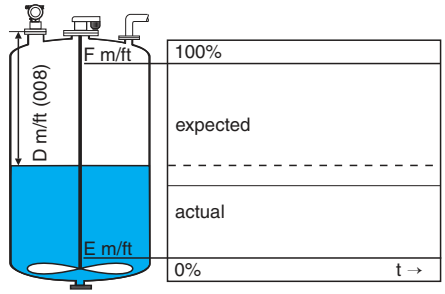 L00-FMR2xxxx-19-00-00-en-019	1. Check empty calibration (005) and full calibration (006). 2. Check linearisation – level/ullage (040) – max. scale(046) – diameter vessel(047) – linearisation table
Measured value (000) and measured distance (008) are incorrect		1. For measurements in bypass or stilling well: Select the according option in the **"tank shape" (002)** function. 2. Carry out interference echo suppression.
No change in measured value on filling/ emptying	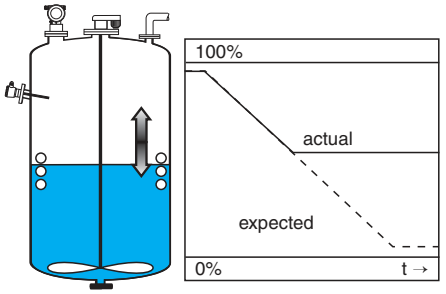 L00-FMR2xxxx-19-00-00-en-014	1. Carry out interference echo suppression. 2. Clean sensor if necessary 3. If necessary, select better installation position 4. If necessary due to wide interference echoes, set function "detection window" (0A7) to "off".
With an uneven surface (e.g. filling, emptying, running agitator) the measured value may jump sporadically to higher levels	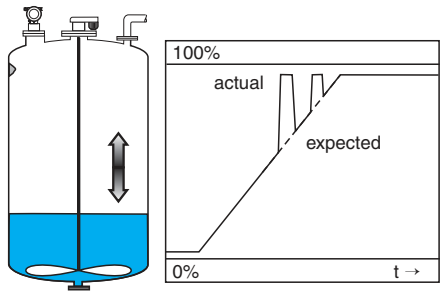 L00-FMR2xxxx-19-00-00-en-015 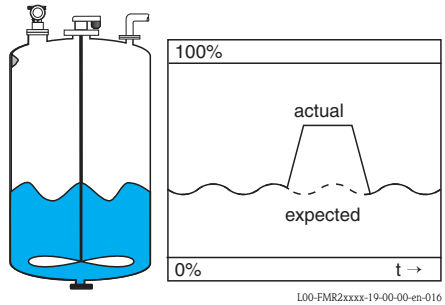 L00-FMR2xxxx-19-00-00-en-016	1. Carry out interference echo suppression 2. Set the process cond. (004) to "calm surface" or "add. agitator" 3. Increase output damping (058). 4. If necessary, select a different installation position and/or a larger sensor
On filling/emptying the measured value drops	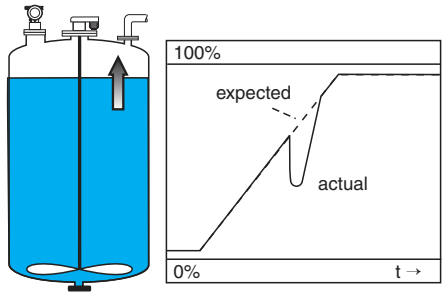 L00-FMR2xxxx-19-00-00-en-017	1. Check tank shape (002), e.g. "dome ceiling" or "horizontal cyl." 2. If possible, do not select a central installation position 3. Possible user stilling well/echo guide pipe

Error	Example	Elimination
E 641 (echo loss)	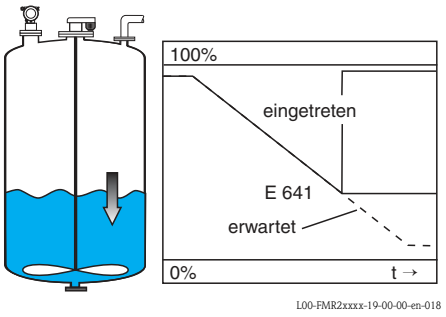	1. Check application parameters (002), (003) and (004) 2. If necessary, select a different installation position and/or a larger sensor 3. Align the sensor parallel to the product surface (particularly for bulk solids applications)

8 Maintenance and repairs

8.1 Exterior cleaning

When cleaning the exterior, always use cleaning agents that do not attack the surface of the housing and the seals.

8.2 Repairs

The Endress+Hauser repair concept assumes that the measuring devices have a modular design and that customers are able to undertake repairs themselves → 66, "Spare Parts". For more information on service and spare parts, contact the Service Department at Endress+Hauser.

8.3 Repairs to Ex-approved devices

When carrying out repairs to Ex-approved devices, please note the following:
- Repairs to Ex-approved devices may only be carried out by trained personnel or by the Endress+Hauser Service.
- Comply with the prevailing standards, national Ex-area regulations, safety instructions (XA) and certificates.
- Only use original spare parts from Endress+Hauser.
- When ordering a spare part, please note the device designation on the nameplate. Only replace parts with identical parts.
- Carry out repairs according to the instructions. On completion of repairs, carry our the specified routine test on the device.
- Only Endress+Hauser Service may convert a certified device into a different certified variant.
- Document all repair work and conversions.

8.4 Replacement

After a complete instrument or electronic module has been replaced, the parameters can be downloaded into the instrument again via the communication interface. Prerequisite to this is that the data were uploaded to the PC beforehand using FieldCare. Measurement can continue without having to carry out a new setup. Only a linearisation and a tank map (interference echo suppression) have to be recorded again.

8.5 Spare Parts

An overview of the spare parts for your device is available in the internet at www.endress.com. To obtain information on the spare parts, proceed as follows:

1. Go to "www.endress.com" and select your country.
2. Click "Instruments".

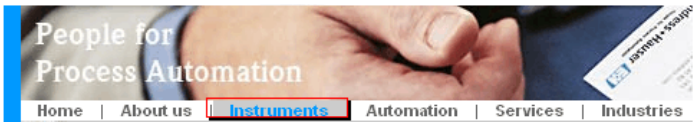

3. Enter the product name into the "product name" field.

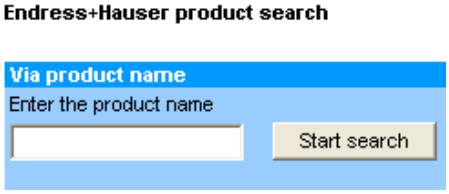

4. Select the device.
5. Click the "Accessories/Spare parts" tab.

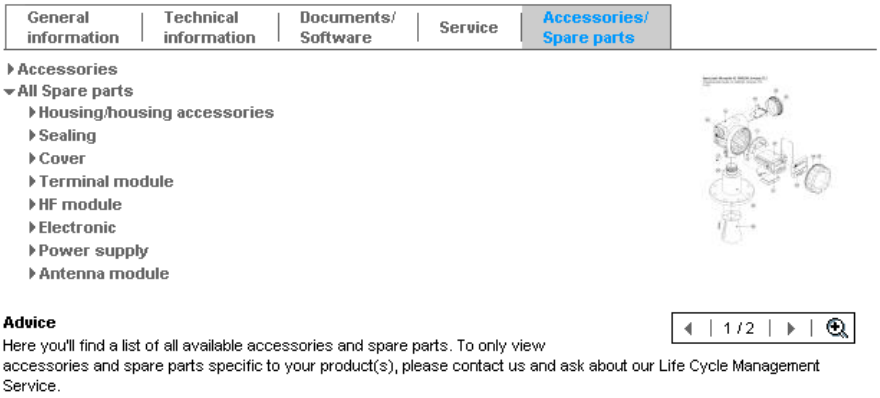

6. Select the required spare parts (You may also use the overview drawing on the right side of the screen.)

When ordering spare parts, always quote the serial number indicated on the nameplate. As far as necessary, the spare parts also include replacement instructions.

8.6 Return

Returning devices
The measuring device must be returned if repairs or a factory calibration are required, or if the wrong measuring device has been ordered or delivered. According to legal regulations, Endress+Hauser, as an ISO-certified company, is required to follow certain procedures when handling returned products that are in contact with medium.
To ensure swift, safe and professional device returns, please read the return procedures and conditions on the Endress+Hauser website at www.services.endress.com/return-material

8.7 Disposal

In case of disposal please seperate the different components according to their material consistence.

8.8 Software history

Software version / date	Changes to software	Changes to documentation
V 01.02.00 / 01.2002 V 01.02.02 / 03.2003	Original software Compatible with: ■ ToF Tool ■ Commuwin II (version 2.05.03 and higher ■ HART Communicator DXR 275 (from OS 4.6) with Rev. 1, DD 1	
V 01.02.04 / 02.2004	■ FMU 42 added ■ compatible with HART Communicator DXR 375	FMU 42 added
V 01.04.00 / 07.2006	■ "detection window" function added can be operated via: ■ ToF Tool from version 4.50 ■ HART Communicator DXR375 with Rev. 1, DD1	"detection window" added Version: 07.06

8.9 Contact addresses of Endress+Hauser

Contact addresses can be found on our homepage: www.endress.com/worldwide. If you have any questions, please contact your Endress+Hauser sales representative.

9 Accessories

9.1 Weather protection cover

A Weather protection cover made of stainless steel is recommended for outdoor mounting (order code: 543199-0001). The shipment includes the protective cover and tension clamp.

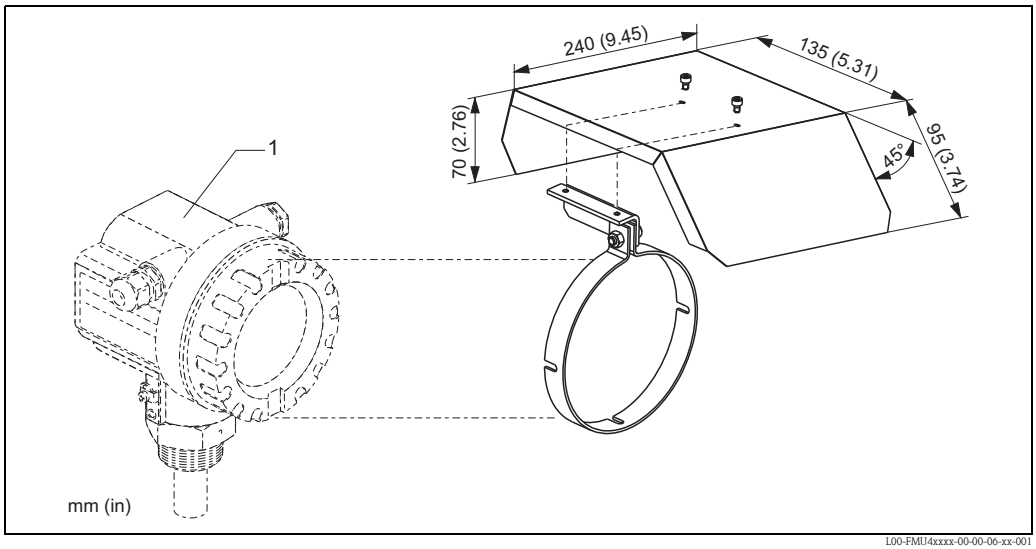

1 F12 / T12 housing

9.2 Installation bracket for FMU40, FMU41

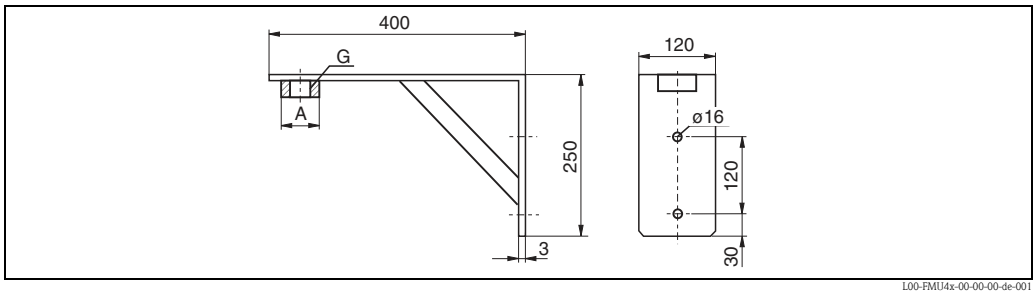

Dimensions in mm

- for FMU40, G1½: Order No. 942669-0000
- for FMU41, G2: Order No. 942669-0001

suited for NPT 1½" and 2" as well

9.3 Screw in flange

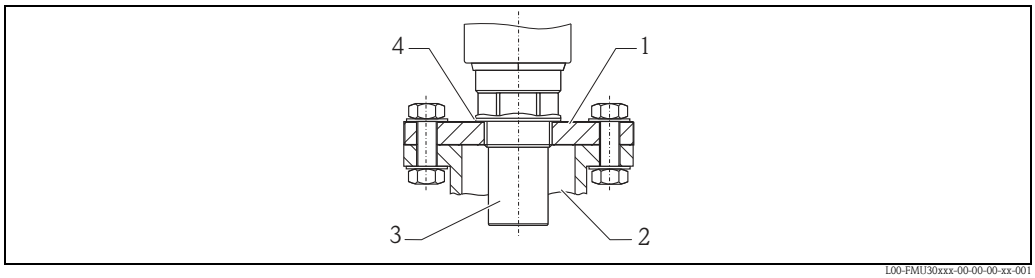

1 Screw in flange
2 Nozzle
3 Sensor
4 Sealing ring EPDM (supplied)

Screw in flange FAX50

015	Material:	
	BR1	DN50 PN10/16 A, steel flange EN1092-1
	BS1	DN80 PN10/16 A, steel flange EN1092-1
	BT1	DN100 PN10/16 A, steel flange EN1092-1
	JF1	2" 150lbs FF, steel flange ANSI B16.5
	JG1	3" 150lbs FF, steel flange ANSI B16.5
	JH1	4" 150lbs FF, steel flange ANSI B16.5
	JK2	8" 150lbs FF, PP max 3bar abs/44psia flange ANSI B16.5
	XIF	UNI flange 2"/DN50/50, PVDF max 4bar abs/58psia, suitable for 2" 150lbs/DN50 PN16/10K 50
	XIG	UNI flange 2"/DN50/50, PP max 4bar abs/58psia, suitable for 2" 150lbs/DN50 PN16/10K 50
	XIJ	UNI flange 2"/DN50/50, 316L max 4bar abs/58psia, suitable for 2" 150lbs/DN50 PN16/10K 50
	XJF	UNI flange 3"/DN80/80, PVDF max 4bar abs/58psia, suitable for 3" 150lbs/DN80 PN16/10K 80
	XJG	UNI flange 3"/DN80/80, PP max 4bar abs/58psia, suitable for 3" 150lbs/DN80 PN16/10K 80
	XJJ	UNI flange 3"/DN80/80, 316L max 4bar abs/58psia, suitable for 3" 150lbs/DN80 PN16/10K 80
	XKF	UNI flange 4"/DN100/100, PVDF max 4bar abs/58psia, suitable for 4" 150lbs/DN100 PN16/10K 100
	XKG	UNI flange 4"/DN100/100, PP max 4bar abs/58psia, suitable for 4" 150lbs/DN100 PN16/10K 100
	XKJ	UNI flange 4"/DN100/100, 316L max 4bar abs/58psia, suitable for 4" 150lbs/DN100 PN16/10K 100
	XLF	UNI flange 6"/DN150/150, PVDF max 4bar abs/58psia, suitable for 6" 150lbs/DN150 PN16/10K 150
	XLG	UNI flange 6"/DN150/150, PP max 4bar abs/58psia, suitable for 6" 150lbs/DN150 PN16/10K 150
	XLJ	UNI flange 6"/DN150/150, 316L max 4bar abs/58psia, suitable for 6" 150lbs/DN150 PN16/10K 150
	XMG	UNI flange DN200/200, PP max 4bar abs/58psia, suitable for DN200 PN16/10K 200
	XNG	UNI flange DN250/250, PP max 4bar abs/58psia, suitable for DN250 PN16/10K 250
	YYY	Special version

020	Sensor Connection:	
	A	Thread ISO228 G3/4
	B	Thread ISO228 G1
	C	Thread ISO228 G1-1/2
	D	Thread ISO228 G2
	E	Thread ANSI NPT3/4
	F	Thread ANSI NPT1
	G	Thread ANSI NPT1-1/2
	H	Thread ANSI NPT2
	Y	Special version

The filled in options result in the complete order code.

	015	020
FAX50 –		

9.4 Cantilever

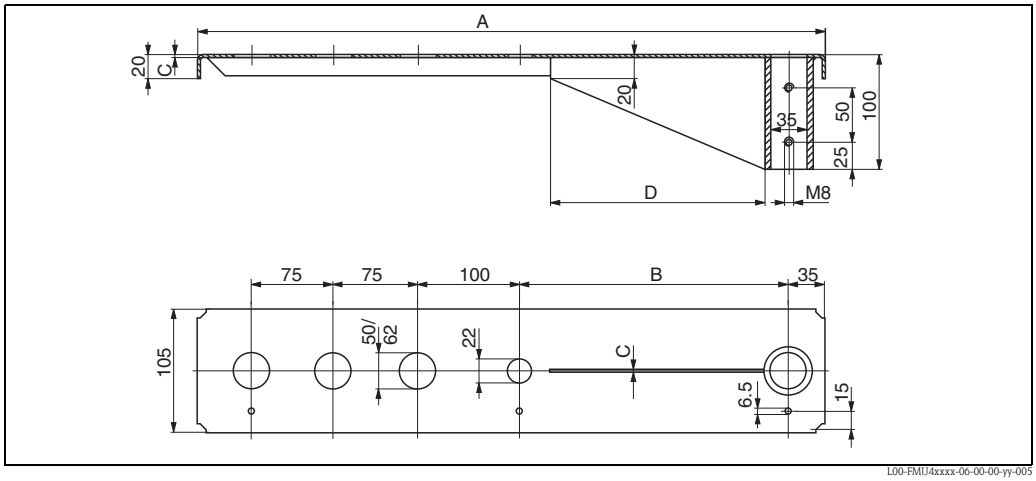

Dimensions in mm

A	B	C	D	for Sensor	Material	Order Code
585 (23)	250 (9.84)	2 (0.08)	200 (7.87)	1½"	316Ti (1.4571)	52014132
					galv. steel	52014131
				2"	316Ti (1.4571)	52014136
					galv. steel	52014135
1085 (42.7)	750 (29.5)	3 (0.12)	300 (11.8)	1½"	316Ti (1.4571)	52014134
					galv. steel	52014133
				2"	316Ti (1.4571)	52014138
					galv. steel	52014137

mm (in)

- The 50 mm (2.17 in) or 62 mm (2.44 in) orifices serve for the mounting of the FMU40 or FMU41 sensor, respecitvely.
- The 22 mm (0.87 in) orifice may be used for an additional sensor.

For the mounting of the cantilever can be used:

- mounting frame → 📄 71
- wall bracket → 📄 71

9.5 Mounting Frame

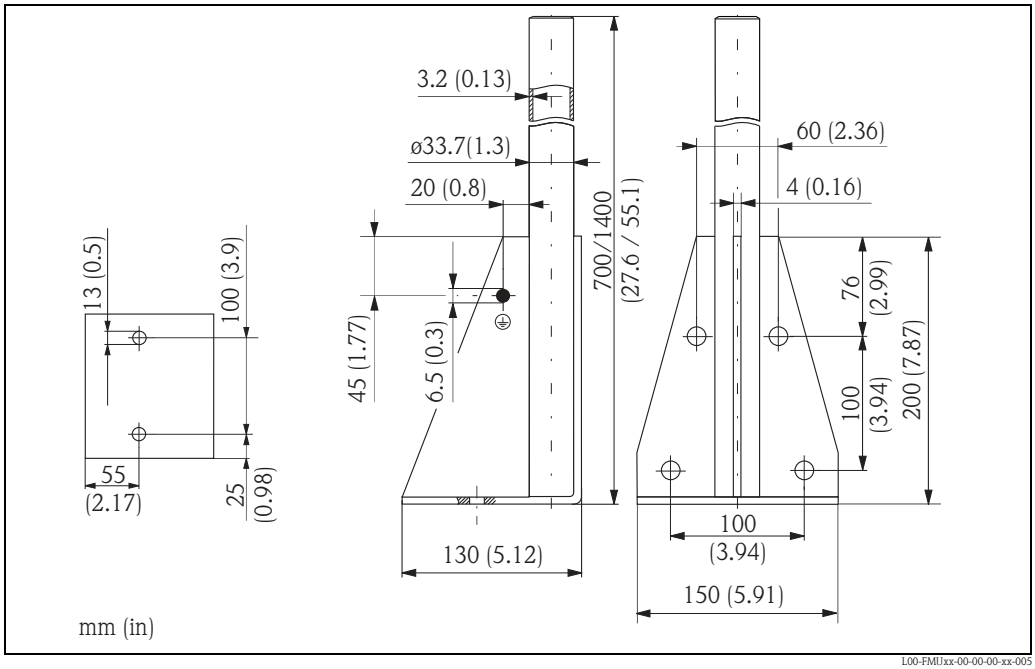

Height	Material	Order Code
700 (27.6)	galv. steel	919791-0000
700 (27.6)	316Ti (1.4571)	919791-0001
1400 (55.1)	galv. steel	919791-0002
1400 (55.1)	316Ti (1.4571)	919791-0003

mm (in)

9.6 Wall Bracket

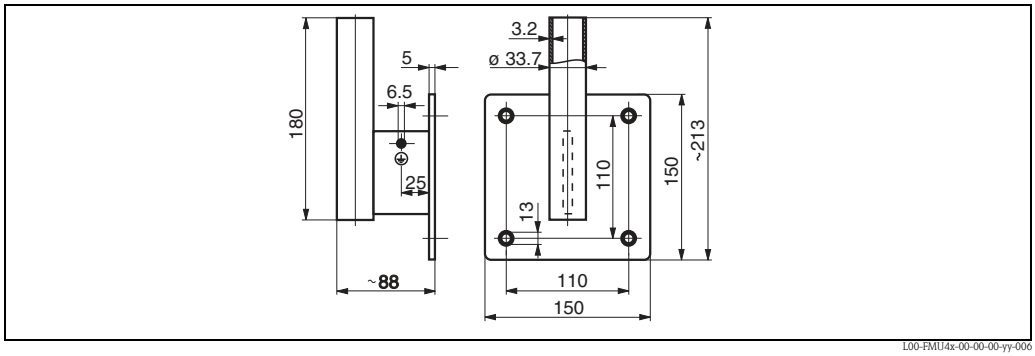

Dimensions in mm

Material	Order Code
galv. steel	919792-0000
316Ti (1.4571)	919792-0001

9.7 Mounting bracket for FMU42, FMU43, FMU44

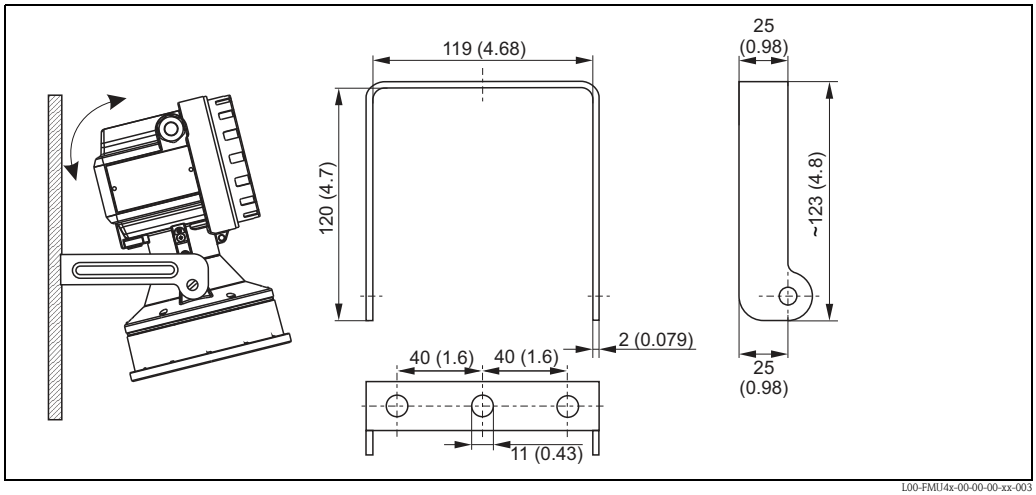

Dimensions in mm (in)

9.8 Commubox FXA195 HART

For intrinsically safe communication with FieldCare via the USB interface.
For details refer to TI00404F/00/EN.

9.9 Commubox FXA291

The Commubox FXA291 connects Endress+Hauser field instruments with CDI interface (= Endress+Hauser Common Data Interface) to the USB interface of a personal computer or a notebook. For details refer to TI00405C/07/EN.

Note!
For the instrument you need the "ToF Adapter FXA291" as an additional accessory.

9.10 ToF Adapter FXA291

The ToF Adapter FXA291 connects the Commubox FXA291 via the USB interface of a personal computer or a notebook for the instrument. For details refer to KA00271F/00/A2.

9.11 Remote display FHX40

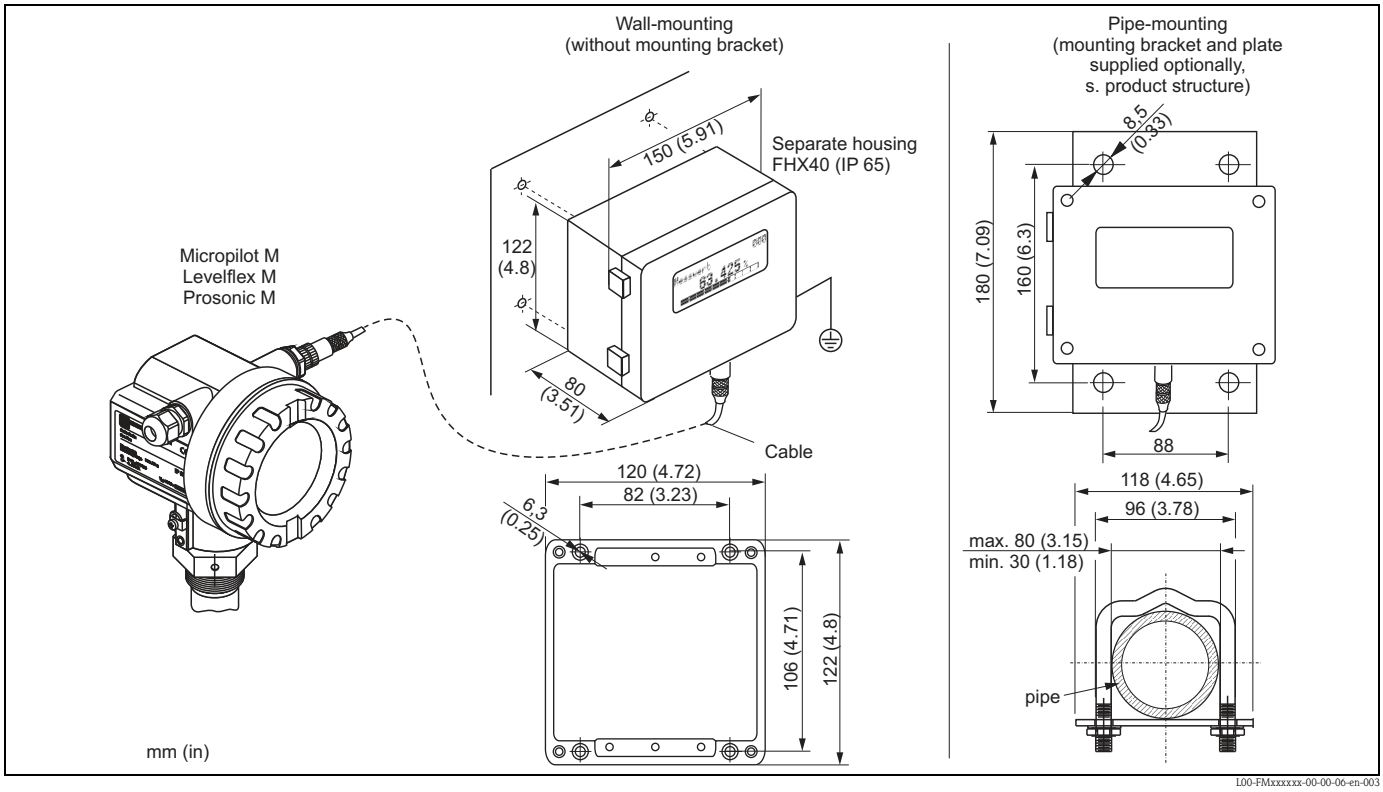

9.11.1 Technical data (cable and housing) and product structure:

Max. cable length	20 m (65 ft)
Temperature range	-40 °C to +60 °C (-40 °F to 140 °F)
Degree of protection	IP65/67 (housing); IP68 (cable) acc. to IEC 60529
Dimensions [mm] / [inch]	122x150x80 (HxWxD) / 4.8x5.9x3.2

010	**Approval:**				
	A	Non-hazardous area			
	2	ATEX II 2G Ex ia IIC T6			
	3	ATEX II 2D Ex ia IIIC T80°C			
	G	IECEx Zone1 Ex ia IIC T6/T5			
	S	FM IS Cl. I Div.1 Gr. A-D, zone 0			
	U	CSA IS Cl. I Div.1 Gr. A-D, zone 0			
	N	CSA General Purpose			
	K	TIIS Ex ia IIC T6			
	C	NEPSI Ex ia IIC T6/T5			
	Y	Special version, TSP-Nr. to be spec.			
020		**Cable:**			
		1	20m / 65ft: for HART		
		5	20m / 65ft: for PROFIBUS PA/FOUNDATION Fieldbus		
		9	Special version, TSP-Nr. to be spec.		
030			**Additional option:**		
			A	Basic version	
			B	Mounting bracket, pipe 1"/ 2"	
			Y	Special version, TSP-Nr. to be spec.	
995				**Marking:**	
				1	Tagging (TAG)
FHX40 -				Complete product designation	

For connection of the remote display FHX40 use the cable which fits the communication version of the respective instrument.

10 Technical Data

10.1 Technical data at a glance

10.1.1 Input

Measured variable

The distance D between the sensor membrane and the product surface is measured.

Using the linearisation function, the device uses D to calculate:
- level L in any units
- volume V in any units
- flow Q across measuring weirs or open channels in any units

Maximum range/blocking distance

Sensor	Maximum range in liquids[1]	Maximum range in solids[1]	blocking distance
FMU40	5 m (16 ft)	2 m (6.6 ft)	0.25 m (0.8 ft)
FMU41	8 m (26 ft)	3.5 m (11 ft)	0.35 m (1.1 ft)
FMU42	10 m (33 ft)	5 m (16 ft)	0.4 m (1.3 ft)
FMU43	15 m (49 ft)	7 m (23 ft)	0.6 m (2.0 ft)
FMU44	20 m (66 ft)	10 m (33 ft)	0.5 m (1.6 ft)

[1]The actual range is dependent on the measuring conditions. Refer to Technical Information TI00365F/00/EN for an estimation.

10.1.2 Output

Output signal

PROFIBUS PA

Signal on alarm

- Error symbol, error code and plain text description on the on-site display
- Status byte of the digital signal input

10.1.3 Power supply

Terminals

Cable cross-section: 0.5 to 2.5 mm (20 to 14 AWG)

Cable entry

- Cable gland M20x1.5 (recommended cable diameter 6 ... 10 mm (0.24 ... 0.39 in))
- Cable entry G½ or ½ NPT
- PROFIBUS M12 plug

Supply voltage

9 V ... 32 V
There may be additional restrictions for devices with an explosion protection certificate. Refer to the notes in the appropriate safety instructions (XA).

Current consumption

approx. 12 mA for the range of voltages given above

10.1.4 Performance characteristics

Reaction time

The reaction time depends on the parameter settings. The minimum values are:

- FMU40/41/42/43: min. 2 s
- FMU44: min. 3 s

Reference operating conditions

- Temperature = +20 °C (+68 °F)
- Pressure = 1013 mbar abs. (15 psi abs.)
- Humidity = 50 %
- Ideal reflective surface (e.g. calm, smooth fluid surface)
- No interference reflections within signal beam
- Set application parameters:
  - Tank shape = flat ceiling
  - Medium property = liquid
  - process conditions = calm surface

Measured value resolution

Sensor	Measured value resolution
FMU40	1 mm (0.04 in)
FMU41	1 mm (0.04 in)
FMU42	2 mm (0.08 in)
FMU43	2 mm (0.08 in)
FMU44	2 mm (0.08 in)

Measuring error

Typical specifications for reference operating conditions (include linearity, repeatability, and hysteresis):

Sensor	Measuring error
FMU40	±2 mm (0.08 in) or 0.2% of set measuring distance (empty calibration)[1]
FMU41	± 2 mm (0.08 in) or 0.2% of set measuring distance (empty calibration)[1]
FMU42	± 4 mm (0.16 in) or 0.2% of set measuring distance (empty calibration)[1]
FMU43	± 4 mm (0.16 in) or 0.2% of set measuring distance (empty calibration)[1]
FMU44	± 4 mm (0.16 in) or 0.2% of set measuring distance (empty calibration)[1]

[1] whichever is greater

Influence of the vapor pressure

The vapor pressure at 20 °C (68 °F) gives a hint on the accuracy of the ultrasonic level measurement. If the vapor pressure at 20 °C (68 °F) is below 50 mbar (1 psi), ultrasonic level measurement is possible with a very high accuracy. This is valid for water, aqueous solutions, water-solid-solutions, dilute acids (hydrochloric acid, sulfuric acid, ...), dilute bases (caustic soda, ...), oils, greases, slurries, pastes, ...
High vapor pressures or outgassing media (ethanol, acetone, ammonia, ...) can influence the accuracy. If conditions like these are present, please contact the Endress+Hauser support.

10.1.5 Operating conditions: Environment

Ambient temperature	–40 °C ... +80 °C (–40 °F ... +176 °F) The functionality of the LC display becomes restricted at Tu<–20 °C (Tu<–4 °F) and Tu>+60 °C (Tu>140 °F). If the device is operated outdoors in strong sunlight, you should use a protective cover.
Storage temperature	–40 °C ... +80 °C (–40 °F ... +176 °F)
Climate class	DIN EN 60068-2-38 (Test Z/AD) DIN/IEC 68 T2-30Db
Ingress protection	■ With closed housing, tested according to – IP 68, NEMA 6P (24h at 1.83m (6 ft) under water surface) – IP 66, NEMA 4x ■ With open housing: IP 20, NEMA 1 (also ingress protection of the display)
Vibration resistance	DIN EN 60068-2-64 / IEC 68-2-64: 20…2000 Hz, 1 $(m/s^2)^2/Hz$; 3 x 100 min
Electromagnetic compatibility (EMC)	■ Electromagnetic compatibility according to all relevant requirements of the EN 61326- series and NAMUR recommendation EMC (NE21). For details see declaration of conformity.

10.1.6 Operating conditions: Process

Process temperature	–40°C ... +80°C (–40 °F ... +176 °F) A temperature sensor is integrated in the sensor for correction of the temperature-dependent time-of-flight.
Process pressure	■ FMU40/41: 0.7 bar ... 3bar abs. (10.15 psi ... 43.5 psi abs.) ■ FMU42/43/44: 0.7 bar ... 2.5bar abs. (10.15 psi ... 36.25 psi abs.)

11 Appendix

11.1 Operating menu

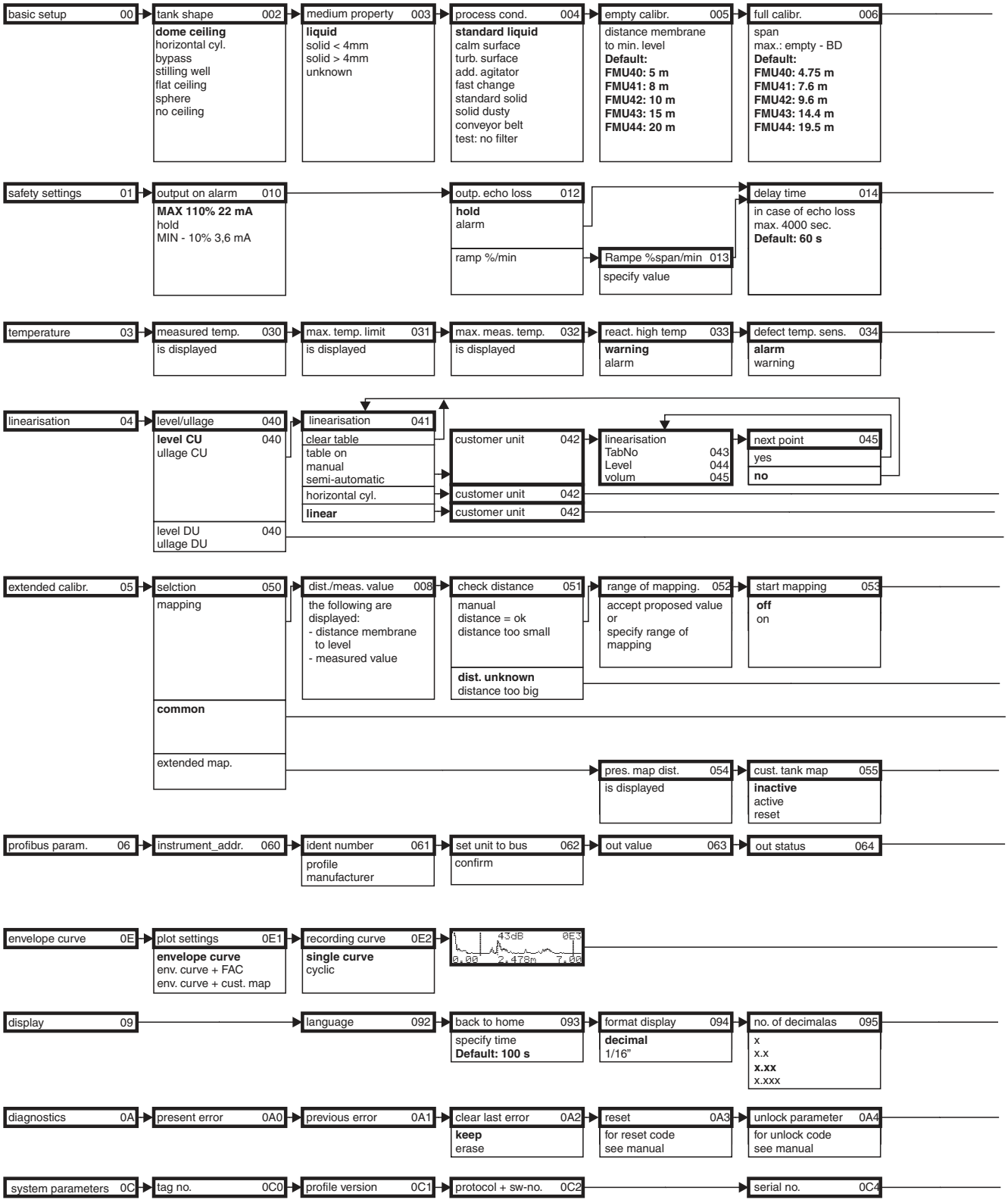

Note! The Default values of the parameters are typed in bold face.

L00-FMU4xxxx-19-00-01-en-016

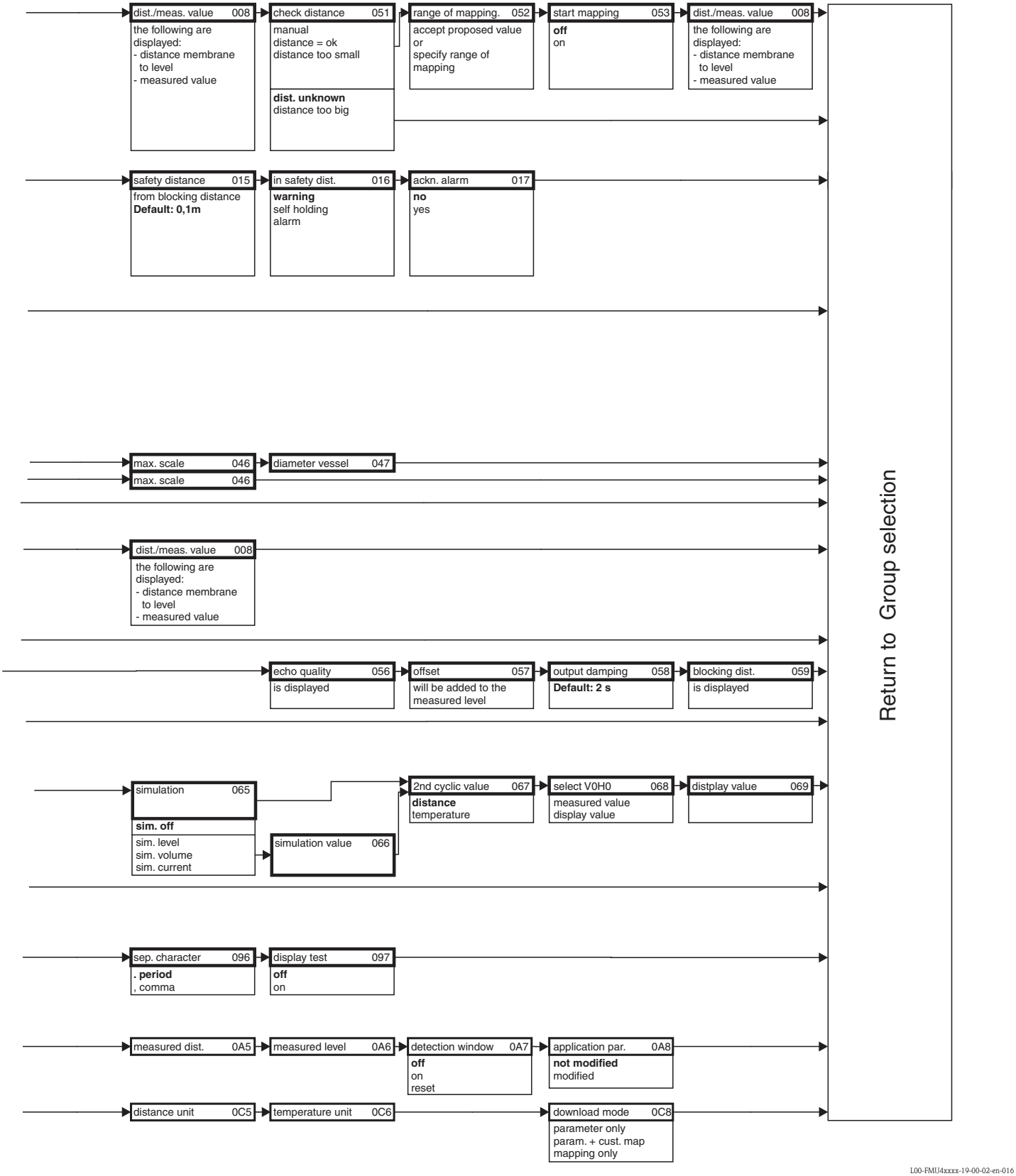

L00-FMU4xxxx-19-00-02-en-016

11.2 Measuring principle

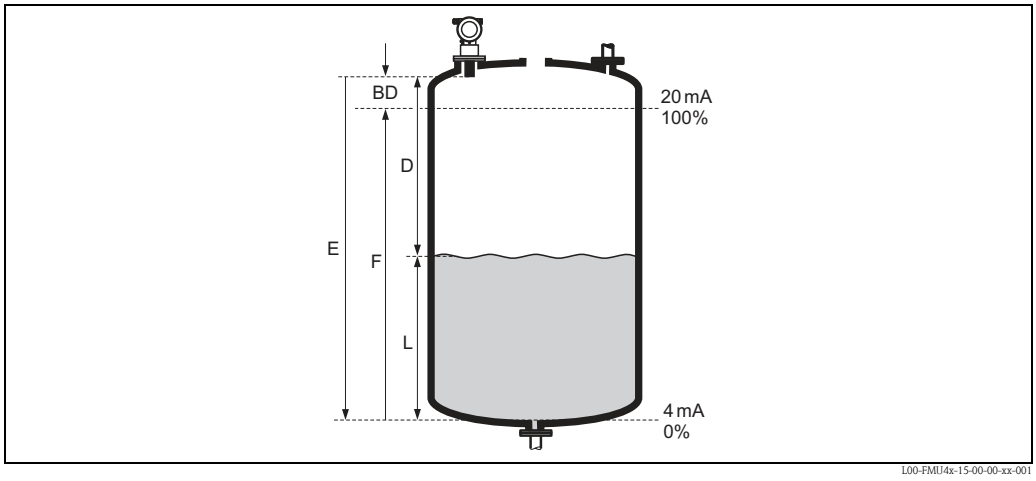

E: *Empty distance;* ***F:*** *Span (full distance);* ***D:*** *Distance from sensor membrane – product surface;* ***L:*** *Level;* ***BD:*** *Blocking distance*

Sensor	BD	Max. range fluids	Max. range bulk materials
FMU40	0.25 m (0.8 ft)	5 m (16 ft)	2 m (6.6 ft)
FMU41	0.35 m (1.1 ft)	8 m (26 ft)	3.5 m (11 ft)
FMU42	0.4 m (1.3 ft)	10 m (33 ft)	5 m (16 ft)
FMU43	0.6 m (2.0 ft)	15 m (49 ft)	7 m (23 ft)
FMU44	0.5 m (1.6 ft)	20 m (66 ft)	10 m (33 ft)

11.2.1 Time-of-flight method

The sensor of the Prosonic M transmits ultrasonic pulses in the direction of the product surface. There, they are reflected back and received by the sensor. The Prosonic M measures the time t between pulse transmission and reception. The instrument uses the time t (and the velocity of sound c) to calculate the distance D between the sensor membrane and the product surface:

$D = c \cdot t/2$

As the device knows the empty distance E from a user entry, it can calculate the level as follows:

$L = E - D$

An integrated temperature sensor compensates for changes in the velocity of sound caused by temperature changes.

11.2.2 Interference echo suppression

The interference echo suppression feature on the Prosonic M ensures that interference echos (e.g. from edges, welded joints and installations) are not interpreted as a level echo.

11.2.3 Calibration

Enter the empty distance E and the span F to calibrate the device.

11.2.4 Blocking distance

Span F may not extend into the blocking distance BD. Level echos within the blocking distance cannot be evaluated due to the transient characteristics of the sensor.

Index

A
alarm 61
application errors 63

B
blocking distance 24, 55

C
cantilever 70
CE mark 15
cleaning 65
Commubox 72
connection 27

D
declaration of conformity 15
display appearance 32
display symbols 32

E
error codes 62
error messages 61

F
FHX40 73
flow measurements 22
full calibration 56

H
hardware security locking 49
hazardous area 4

I
installation bracket 68
interference echo suppression 56

K
key assignment 33
Khafagi-Venturi flume 22

L
level measurements 21

M
measuring principle 80
Measuring range 24

N
nozzle 24

O
on-site display 48
operating menu 78

P
process conditions 54

R
range 25
repairs to Ex-approved devices 65
return 67

S
Service Interface FXA291 72
shafts 21
software security locking 49
Spare Parts 66

T
turn housing 26

W
warning 61
weather protection cover 68

www.endress.com/worldwide

Endress+Hauser

People for Process Automation

BA00238F/00/EN/13.12
71164389
FM+SGML 9.0

71164389