TI01542F/00/EN/03.25-00
71696227
2025-02-14

Technical Information
Liquicap M
FTI52

Capacitance



Point level switch for liquids

Application

For liquids that tend to form build-up. Interface detection of different liquids. Two-point control (pump control) with just one process connection. Foam detection of conductive liquids.

- Process connections: flanges, threads, special hygienic process connections
- International explosion protection certificates, overfill prevention WHG, SIL, hygienic certificates, marine approval

Benefits

- Cost savings thanks to easy and fast commissioning as calibration takes place at the press of a button
- Reliable and safe measurement due to active build-up compensation
- Reliable and universal application thanks to wide range of certificates and approvals
- Short reaction time
- Material in contact with the process made of corrosion-resistant and FDA-listed materials
- Two-stage overvoltage protection
- No need for recalibration after replacing electronics

Endress+Hauser
People for Process Automation

Table of contents

Document information 3
Document conventions 3

Function and system design 4
Measuring principle 4
Function 5
Interface 5
Foam detection 5
Measuring system 6
Electronic inserts 8
System integration via Fieldgate 9

Input 9
Measured variable 9
Measuring range 9
Minimum probe length for nonconductive media < 1 µS/cm 9
Measuring condition 10

Output 10
Switch behavior 10
Switch-on behaviour 10
Fail-safe mode 10
Switching delay 10
Galvanic isolation 11

Power supply 11
Electrical connection 11
Connector 11
Cable entry 12

Performance characteristics 12
Reference operating conditions 12
Switch-on behaviour 12
Ambient temperature effect 12

Installation 12
Installation instructions 12

Environment 17
Ambient temperature range 17
Storage and transport 17
Climate class 17
Vibration resistance 17
Shock resistance 17
Cleaning 17
Degree of protection 17
Electromagnetic compatibility (EMC) 18

Process 18
Process temperature range 18
Process pressure limits 20
Pressure and temperature derating 21
Liquicap M operational range 23

Mechanical construction 23
Housing 23
The extension height of housing with adapter 25
Process connections 27
Fully insulated rope probes 34
Weight 37
Technical data: probe 37
Materials 37

Operability 37
2-wire AC electronic insert FEI51 37
DC PNP electronic insert FEI52 39
3-wire electronic insert FEI53 40
AC and DC with relay output electronic insert FEI54 41
SIL2 / SIL3 electronic insert FEI55 43
PFM electronic insert FEI57S 44
NAMUR electronic insert FEI58 45

Certificates and approvals 47

Ordering information 48

Accessories 49
Shortening kit for FTI52 49
Protective cover 49
Surge arresters 49
Weld-in adapter 49

Documentation 49
Document function 49

Document information

Document conventions

Safety symbols

DANGER
This symbol alerts you to a dangerous situation. Failure to avoid this situation will result in serious or fatal injury.

WARNING
This symbol alerts you to a dangerous situation. Failure to avoid this situation can result in serious or fatal injury.

CAUTION
This symbol alerts you to a dangerous situation. Failure to avoid this situation can result in minor or medium injury.

NOTICE
This symbol contains information on procedures and other facts which do not result in personal injury.

Electrical symbols

Alternating current

Direct current and alternating current

Direct current

Ground connection

A grounded terminal which, as far as the operator is concerned, is grounded via a grounding system.

Protective earth (PE)

Ground terminals that must be connected to ground prior to establishing any other connections.

The ground terminals are located on the interior and exterior of the device:
- Interior ground terminal: protective earth is connected to the mains supply.
- Exterior ground terminal: device is connected to the plant grounding system.

Tool symbols

Phillips head screwdriver

Flat blade screwdriver

Torx screwdriver

Allen key

Open-ended wrench

Symbols for certain types of information and graphics

Permitted
Procedures, processes or actions that are permitted

Preferred
Procedures, processes or actions that are preferred

Forbidden
Procedures, processes or actions that are forbidden

Tip
Indicates additional information

Reference to documentation

Reference to page

Reference to graphic

▶
Notice or individual step to be observed

1., 2., 3.
Series of steps

Result of a step

Help in the event of a problem

Visual inspection

Operation via operating tool

Write-protected parameter

1, 2, 3, ...
Item numbers

A, B, C, ...
Views

Hazardous area
Indicates the hazardous area

Safe area (non-hazardous area)
Indicates the non-hazardous area

→ Safety instructions
Observe the safety instructions contained in the associated Operating Instructions

Temperature resistance of the connection cables
Specifies the minimum value of the temperature resistance of the connection cables

Function and system design

Measuring principle

The principle of capacitance point level detection is based on the change in capacitance of the capacitor due to the probe being covered by liquid. The probe and container wall (conductive material) form an electric capacitor. When the probe is in air (1), a certain low initial capacitance is measured. When the container is filled, the capacitance of the capacitor increases the more the probe is covered (2), (3). The point level switch switches when the capacitance C_S specified during calibration is reached. In addition, a probe with inactive length ensures that the effects of medium buildup or condensate near the process connection are avoided. Active buildup compensation compensates influences resulting from buildup on the probe.

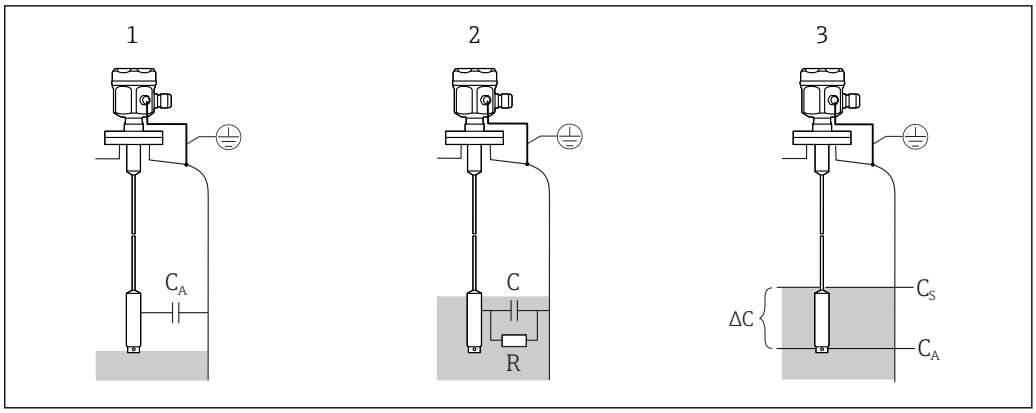

A0042604

1 *Measuring principle of capacitance point level detection*

1 The probe in the air
2 The probe covered by the liquid
3 The probe fully covered by the liquid
R Conductivity of the liquid
C Capacitance of the liquid
C_A Initial capacitance when the probe is not covered
C_S Switching capacitance
ΔC Change in capacitance

Function

The selected electronic insert of the probe determines the change in capacitance on how much the probe is covered and thereby allows precise switching at the calibrated point level.

Interface

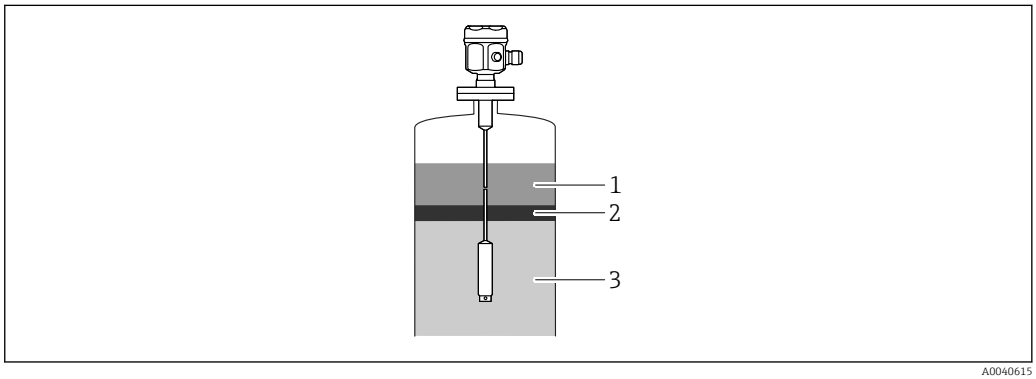

A0040615

2 *The interface overview*

1 Non-conductive medium < 1 µS/cm
2 Emulsion
3 Conductive medium ≥ 100 µS/cm

A prior adjustment also ensures a certain and definite switch point even if the emulsion layer is of varying thickness.

Foam detection

Use partially insulated probes.

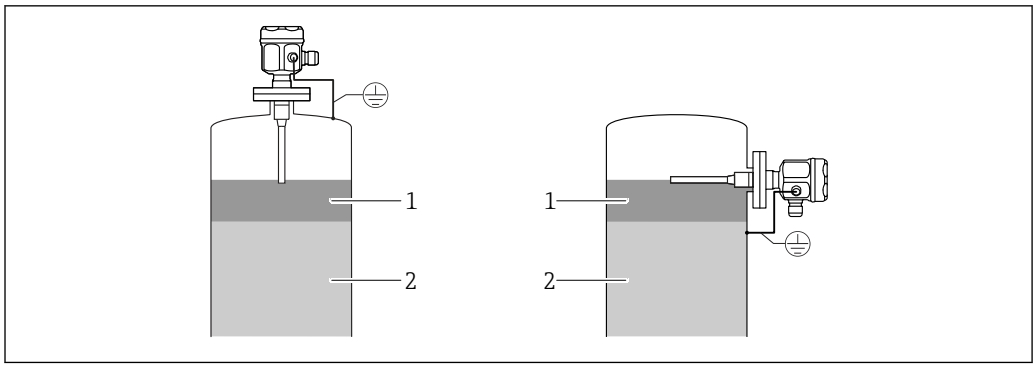

3 *Foam detection for conductive liquids*

1 Liquid
2 Foam

Measuring system

The type of the measuring system depends on the electronic insert selected.

Point level switch

The compact measuring system consists of:
- the Liquicap M FTI52 point level switch
- an electronic insert FEI51, FEI52 or FEI54

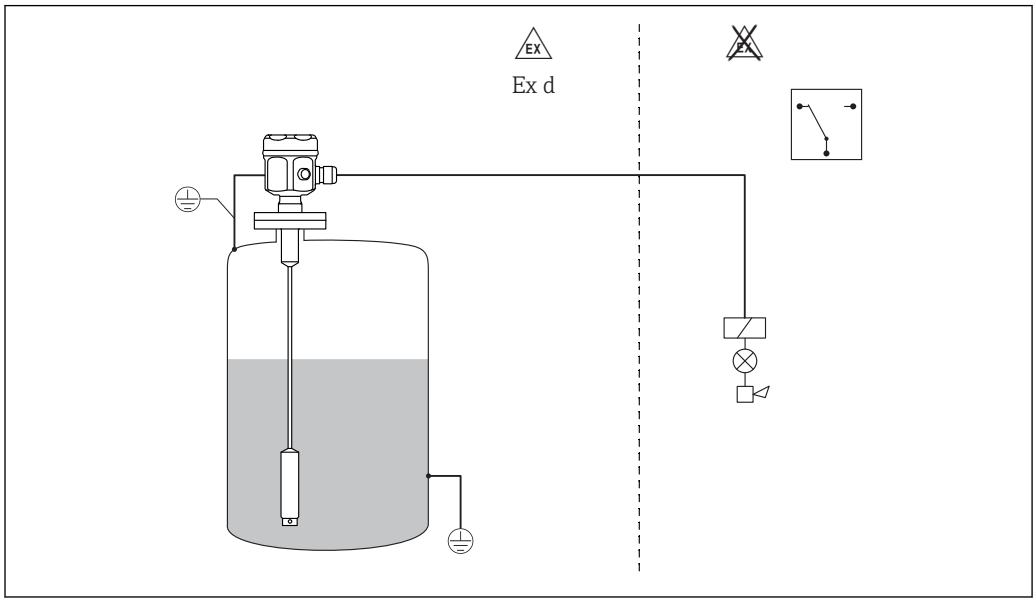

4 *Probe as a point level switch*

Pump control (Δs)

Only possible with a fully insulated probe.

The point level switch can also be used to control a pump, where the switch-on and switch-off point can be defined.

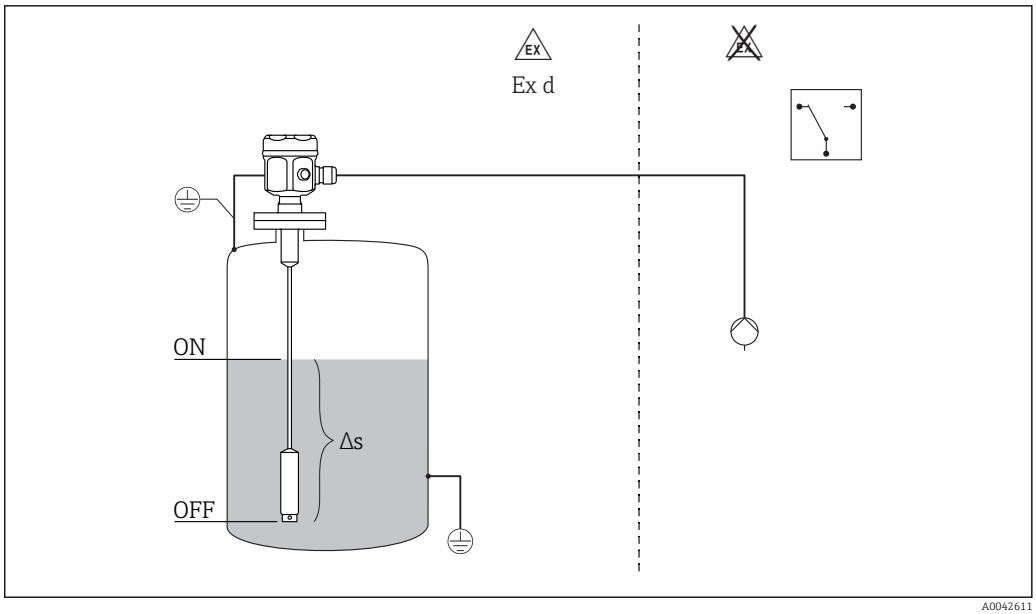

5 *Probe as a two-point control switch*

Δs Two-point control range

Point level switch and separate switching unit

Liquicap M FTI52 with electronic versions FEI53, FEI57S and FEI58 for connecting to a separate switching unit.

The complete measuring system consists of:
- the capacitance Liquicap M FTI52 point level switch
- an electronic insert FEI53, FEI57S, FEI58
- a transmitter power supply unit FTC325, FTL325N

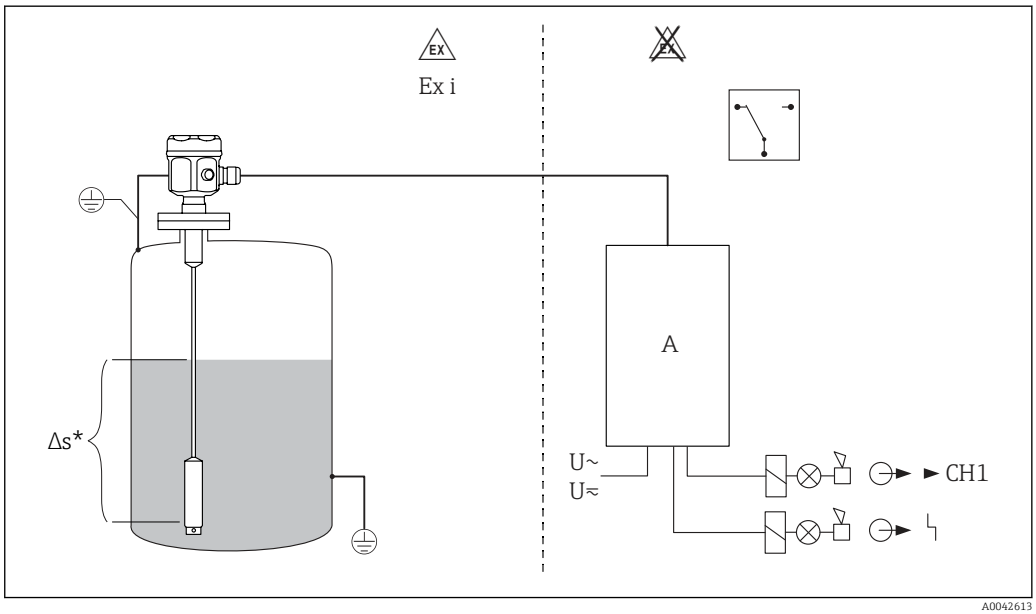

Δs Only with FEI53
A Transmitter power supply unit

Point level switch 8 to 16 mA

The complete measuring system consists of:
- the Liquicap M FTI52 point level switch
- the FEI55 electronic insert
- a transmitter power supply unit, e.g. RMA42

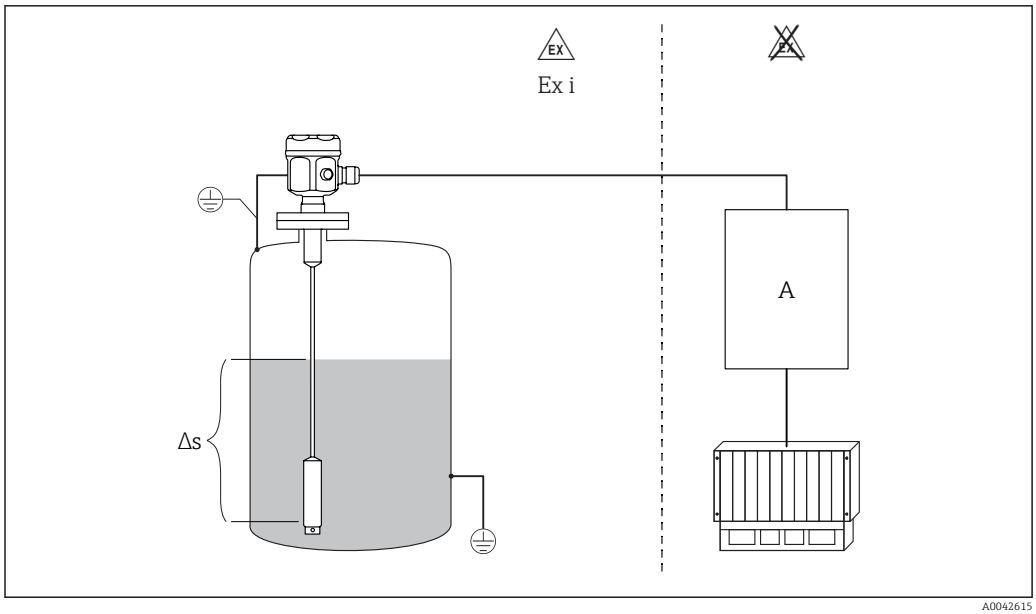

6 Probe as a point level switch

Δs Two-point control range. Only with FEI53
A Transmitter power supply unit

Electronic inserts

FEI51
Two-wire AC connection:
- load switched directly into the power supply circuit via the thyristor
- point level adjustment at the touch of a button

FEI52
3-wire direct current version:
- switch the load via the transistor (PNP) and separate supply voltage connection
- point level adjustment at the touch of a button

FEI53
3-wire direct current version with 3 to 16 V signal output:
- for separate switching unit, Nivotester FTC325 3–WIRE
- self-test from the switching unit without changing levels
- point level adjustment at the touch of a button

FEI54
Universal current version with relay output:
- switch the loads via 2 floating changeover contacts (DPDT)
- point level adjustment at the touch of a button

FEI55
Signal transmission 8 to 16 on two-wire cabling:
- SIL2 approval for the hardware
- SIL3 approval for the software
- for separate switching unit (e.g. RMA42)
- point level adjustment at the touch of a button

FEI57S
PFM signal transmission (current pulses are superimposed on the supply current):
- for separate switching unit with PFM signal transmission e.g. Nivotester FTC325 PFM
- self-test from the switching unit without changing levels
- point level adjustment at the touch of a button
- cyclical checking (function check) from the switching unit

FEI58 (NAMUR)
Signal transmission H-L edge 2.2 to 3.5 mA or 0.6 to 1.0 mA as per IEC 60947-5-6 on two-wire cable:
- for a separate switching unit (e.g. Nivotester FTL325N)
- point level adjustment at the touch of a button
- connection cables and slaves tested at the touch of a button

System integration via Fieldgate

Vendor managed inventory

The remote interrogation of tank or silo levels via Fieldgate enables suppliers of raw materials to gather information about the current inventories of their regular customers at any time and, for example, to take this into account in their own production planning. The Fieldgate monitors the configured point levels and automatically triggers the next order as required. Here, the range of possibilities ranges from simple requisitioning by e-mail through to fully automatic order processing by incorporating XML data into the planning systems on both sides.

Remote maintenance of measuring systems

Not only does Fieldgate transmit the current measured values, it also alerts the standby personnel responsible by e-mail or SMS as required. Fieldgate forwards the information transparently. In this way, all options of the operating software in question are available remotely. By using remote diagnosis and remote configuration some onsite service operations can be avoided and all others can at least be planned and prepared better.

Input

Measured variable

Measurement of change in capacitance between probe rope and tank wall and depends on the level of a liquid.

Probe covered = high capacitance

Probe not covered = low capacitance

Measuring range

Measuring frequency
500 Hz

Span
- ΔC = 5 to 1 600 pF
- FEI58: ΔC = 5 to 500 pF

Final capacitance
C_E = maximum 1 600 pF

Adjustable initial capacitance
- range 1 - factory setting
  C_A = 5 to 500 pF
- range 2 - not available with FEI58
  C_A = 5 to 1 600 pF

The minimum change in capacitance for point level detection
≥ 5 pF

Minimum probe length for nonconductive media < 1 µS/cm

The minimum probe length can be calculated using the formula:

$$l_{min} = \frac{\Delta C_{min}}{C_s \cdot (\varepsilon_r - 1)}$$

A0040204

l_{min}	minimum probe length
ΔC_{min}	5 pF
C_s	probe capacitance in air
ε_r	relative dielectric constant, e.g. for dried grain = 3.0

Measuring condition

- When installing in a nozzle, use inactive length L3.
- Probes with active buildup compensation must be used for high-viscosity liquids that tend to form buildup.
- Fully insulated rope probes have to be used for pump control (ΔS operation).
- The switch-on and switch-off points are determined by the empty and full calibration.

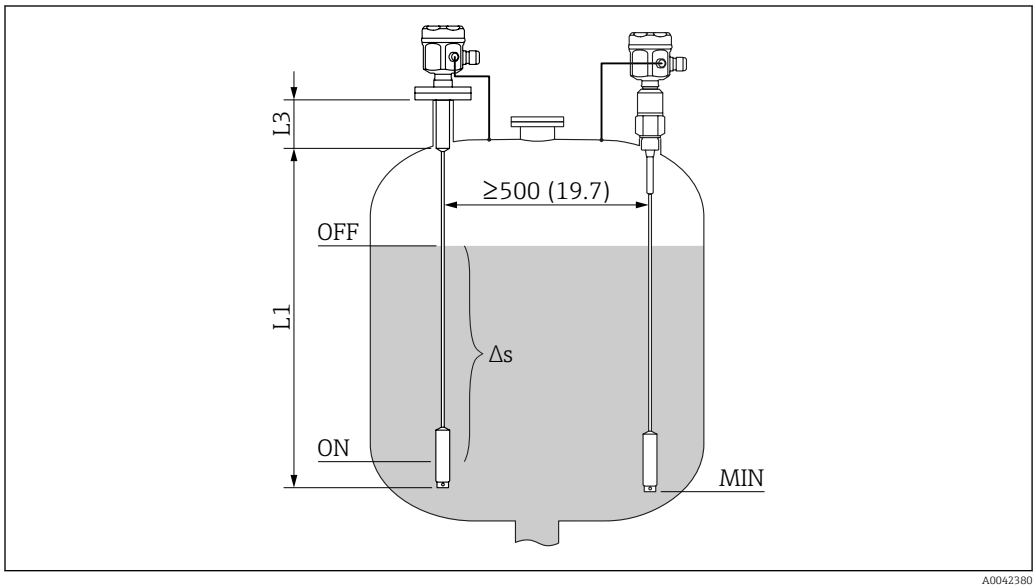

7 Measuring condition. Unit of measurement mm (in)

L1 Measuring range
L3 Inactive length
ΔS Two-points control range

The 0 % and 100 % calibration can be inverted.

Output

Switch behavior

Binary or Δs operation.

The pump control is not possible with FEI58.

Switch-on behaviour

When the power supply is switched on, the switching status of the outputs corresponds to the signal on the alarm.

The correct switch condition is reached after a maximum of 3 s.

Fail-safe mode

Minimum and maximum quiescent current safety can be switched at the electronic insert [1].

MIN
Minimum safety: the output switches safety-oriented when the probe is uncovered [2] (signal on alarm).

MAX
Maximum safety: the output switches safety-oriented when the probe is covered [3] (signal on alarm).

Switching delay

FEI51, FEI52, FEI54, FEI55
Can be adjusted incrementally at the electronic insert: 0.3 to 10 s.

1) For FEI53 and FEI57S only on the associated Nivotester: FTC325.
2) E.g. for dry running protection and pump protection.
3) E.g. for use with overfill protection.

FEI53, FEI57S
Depends on the connected Nivotester (transmitter): FTC325.

FEI58
Can be adjusted alternately at the electronic insert: 1 s or 5 s

Galvanic isolation

FEI51 and FEI52
between the probe and power supply

FEI54
between the probe, power supply and load

FEI53, FEI55, FEI57S and FEI58
see connected switching device [4)]

Power supply

Electrical connection

Depending on explosion protection, the connection compartment is available in the following variants:

Standard protection, Ex ia protection
- polyester housing F16
- stainless steel housing F15
- aluminum housing F17
- aluminum housing F13 with gas-tight process seal
- stainless steel housing F27 with gas-tight process seal
- aluminum housing T13 with a separate connection compartment

Ex d protection, Gas-tight process seal
- aluminum housing F13 with gas-tight process seal
- stainless steel housing F27 with gas-tight process seal
- aluminum housing T13 with a separate connection compartment

Connector

For the version with a connector M12, the housing does not have to be opened for connecting the signal line.

PIN assignment for M12 connector

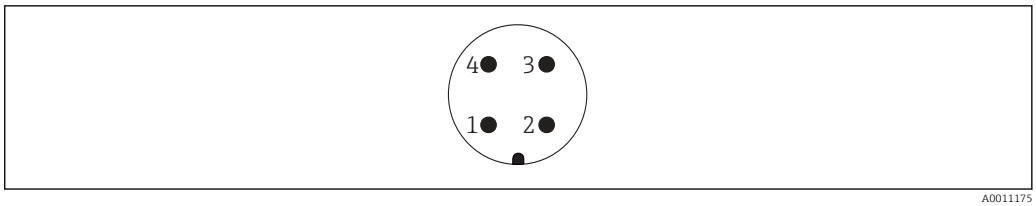

8 M12 connector with 2-wire-electronic insert FEI55, FEI57, FEI58, FEI57C

1 Positive potential
2 Not used
3 Negative potential
4 Ground

4) Functional galvanic isolation in the electronic insert.

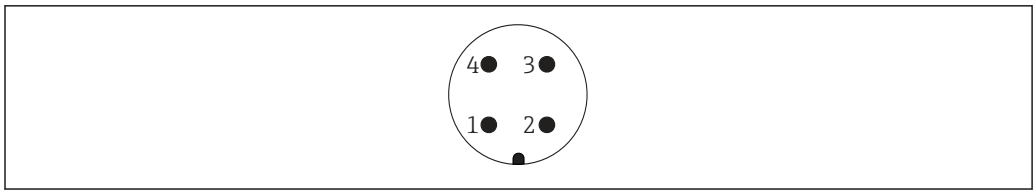

9 M12 connector with 3-wire-electronic insert FEI52, FEI53

1 Positive potential
2 Not used
3 Negative potential
4 External load / signal

Cable entry

Cable gland
M20x1.5 for Ex d only cable entry M20
Two cable glands are included in scope of delivery.

Cable entry
- G½
- NPT½
- NPT¾
- M20 thread

Performance characteristics

Reference operating conditions

Room temperature: 20 °C (68 °F) ±5 °C (±8 °F)

Span:
- FEI51, FEI52, FEI53, FEI54, FEI55, FEI57S
  ΔC = 5 to 1 600 pF
- FEI58 (NAMUR)
  ΔC = 5 to 500 pF

Switch-on behaviour

When the power supply is switched on, the switching status of the outputs corresponds to the signal on the alarm.

The correct switch condition is reached after a maximum of 3 s.

Ambient temperature effect

Electronic insert
< 0.06 % per 10 K related to the full-scale value

Separate housing
capacitance change of connecting cable per meter 0.15 pF per 10 K

Installation

Installation instructions

Mounting the sensor

The Liquicap M FTI52 can be installed from the top only.

Make sure that:
- the probe is not installed in the area of the filling curtain
- the probe is not in contact with the container wall
- the distance from the container floor is ≥10 mm (0.39 in)
- multiple probes are mounted next to each other at the minimum distance between the probes of 500 mm (19.7 in)

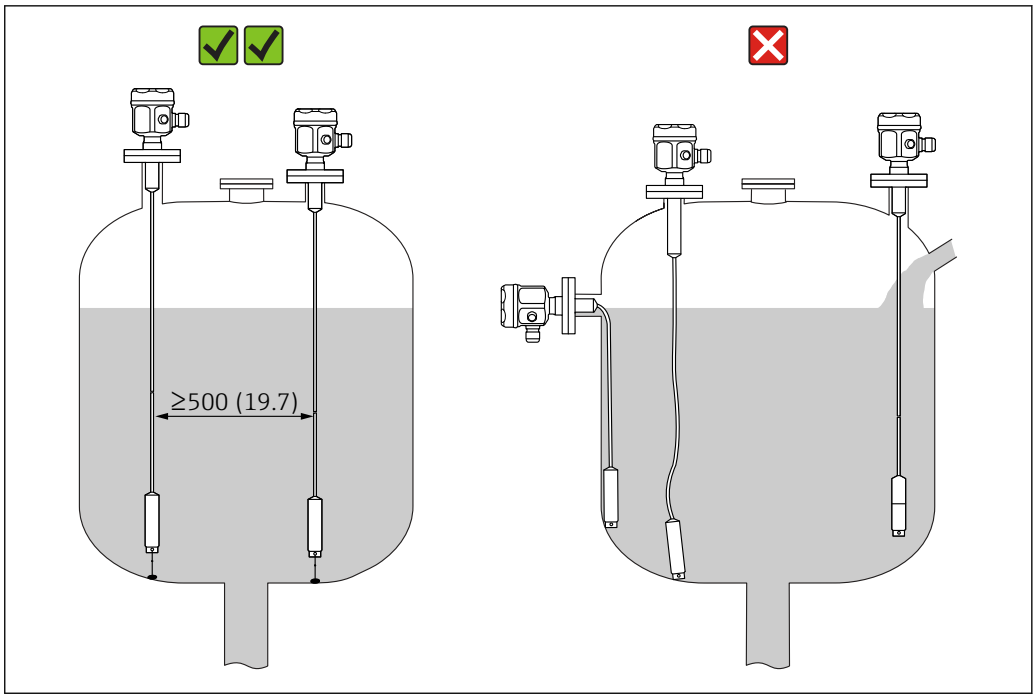

10 *Proper probe mounting. Unit of measurement mm (in)*

Installation examples

Rope probes

The application examples show vertical installation of rope probes for MIN point level detection.

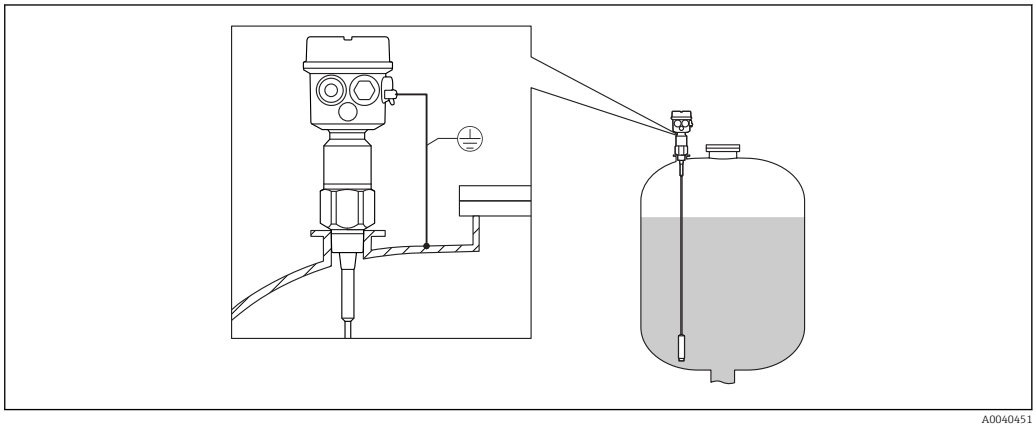

11 *A probe with conductive tanks*

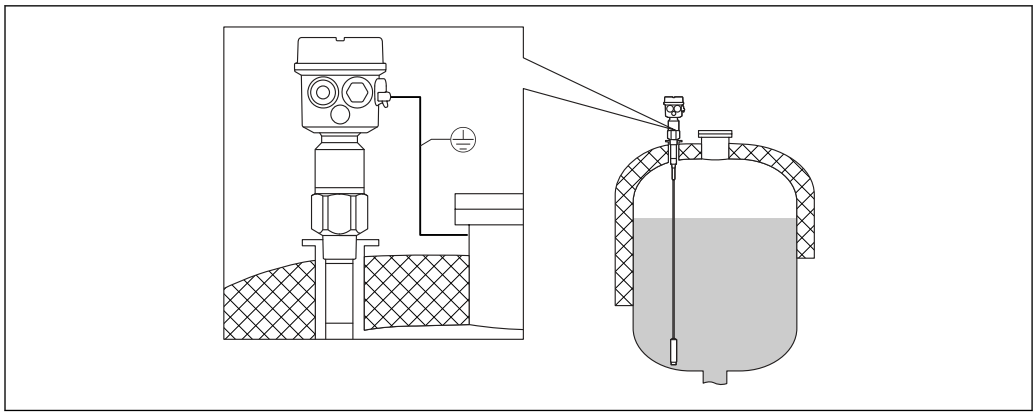

12 *A probe with inactive length for the insulated tanks*

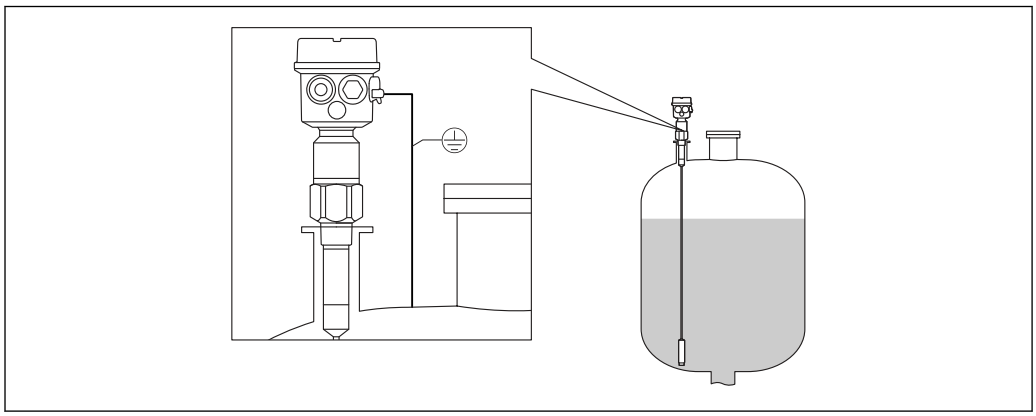

13 *A probe with fully insulated inactive length*

Rope shortening

Both versions of the rope probes can be shortened. The weigth must be removed from the rope first. See Operating Instructions.

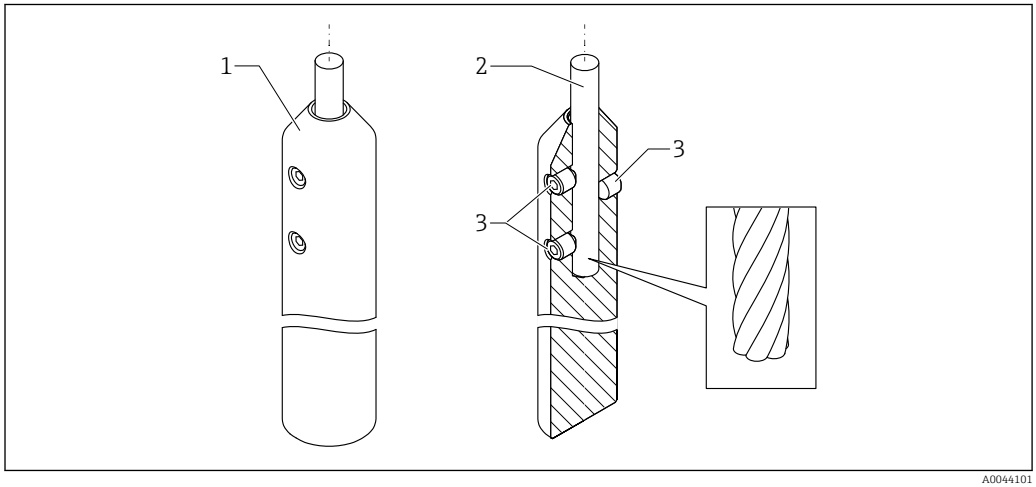

14 *The tension weight overview*

1 The tension weight
2 The rope
3 The locking screws

Tensioning weight with tension

The end of the probe needs to be secured if the probe would otherwise touch the silo wall or another part in the tank. This is what the internal thread in the probe weight is intended for. The bracing can be conductive or insulating to the tank wall.

To avoid too high tensile load, the rope should be loose or guyed with a spring. The maximum tensile load may not exceed 200 Nm (147.5 lbf ft).

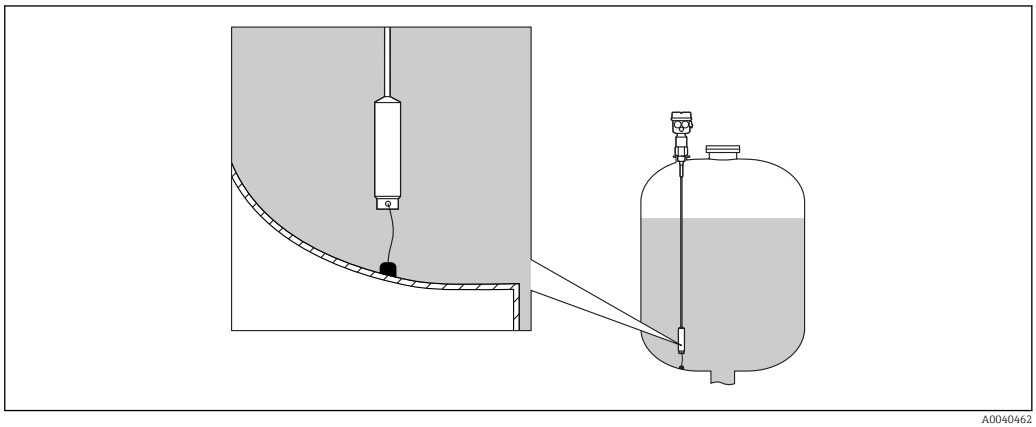

A0040462

Probe with separate housing

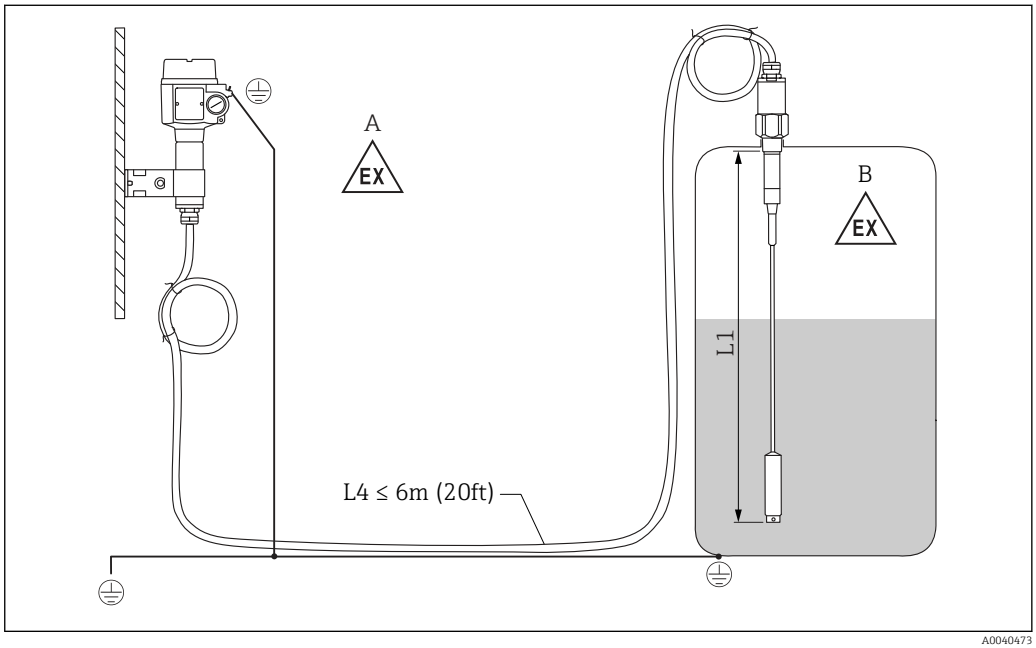

A0040473

15 *Connection of the probe and separate housing. Unit of measurement mm (in)*

A Explosive zone 1
B Explosive zone 0
L1 Rope length: max. 4 m (13 ft)
L4 Cable length

The maximum cable length L4 and rope length L1 cannot exceed 10 m (33 ft).

The maximum cable length between the probe and separate housing is 6 m (20 ft). The required cable length must be indicated in the ordering process of a Liquicap M with separate housing.

If the cable connection has to be shortened or led through a wall, then it must be separated from the process connection.

Extension heights: separate housing

The cable has:
- a minimum bending radius of r ≥ 100 mm (3.94 in)
- Ø 10.5 mm (0.14 in)
- outer jacket made of silicone, notch resistance

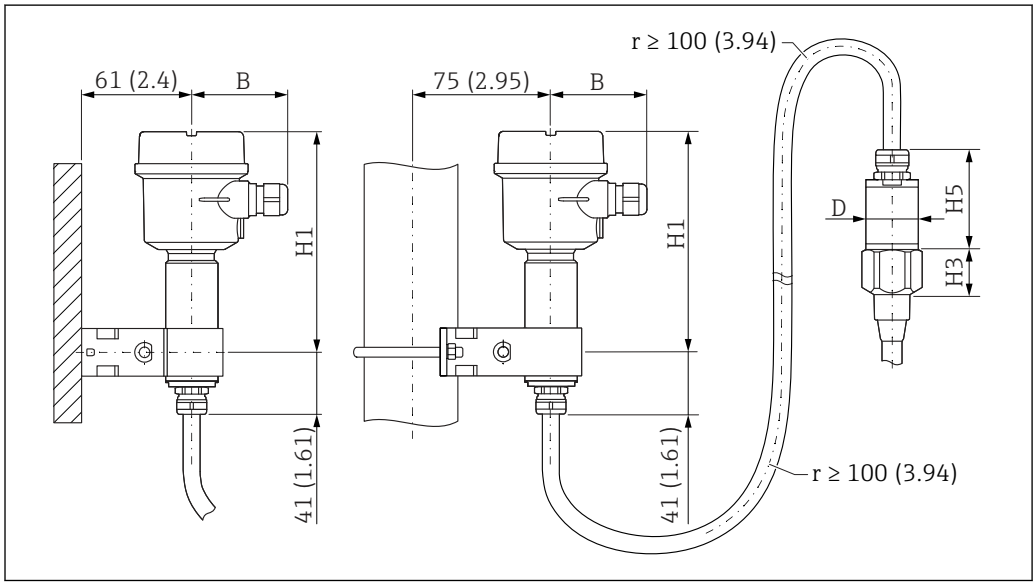

16 *Housing side: wall mounting, pipe mounting, and sensor side. Unit of measurement mm (in)*

Values of parameters [5]:

Polyester housing (F16)
- B: 76 mm (2.99 in)
- H1: 172 mm (6.77 in)

Stainless steel housing (F15)
- B: 64 mm (2.52 in)
- H1: 166 mm (6.54 in)

Aluminum housing (F17)
- B: 65 mm (2.56 in)
- H1: 177 mm (6.97 in)

D and H5 parameter value
- Probes Ø10 mm (0.39 in) rod:
  - D: 38 mm (1.5 in)
  - H5: 66 mm (2.6 in)
- Probes Ø16 mm (0.63 in) rod, without fully insulated inactive length and threads G½",G¾", G1", NPT½",NPT¾", NPT1", Clamp 1", Clamp 1½", Universal Ø44 mm (1.73 in), flange < DN50, ANSI 2", 10K50:
  - D: 38 mm (1.5 in)
  - H5: 66 mm (2.6 in)
- Probes Ø16 mm (0.63 in) rod, without fully insulated inactive length and threads: G1½", NPT1½", Clamp 2", DIN 11851, flange ≥ DN50, ANSI 2", 10K50:
  - D: 50 mm (1.97 in)
  - H5: 89 mm (3.5 in)
- Probes Ø22 mm (0.87 in) rod, with fully insulated inactive length:
  - D: 38 mm (1.5 in)
  - H5: 89 mm (3.5 in)

H3 parameter value
H3 is the height of the cone head. The height H3 depends on the type of process connection.

5) See parameters on the drawings.

Wall bracket

- The wall bracket is a part of the scope of delivery.
- To use the wall bracket as a drill template, the wall bracket must be first screwed to the separate housing.
- The distance between the holes is reduced by screwing it to the separate housing.

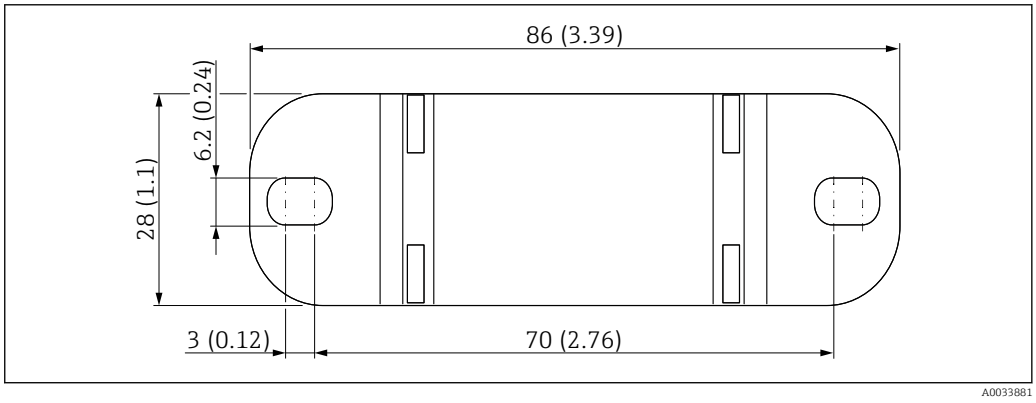

17 *Wall bracket overview. Unit of measurement mm (in)*

Environment

Ambient temperature range

- F16 housing: −40 to +70 °C (−40 to +158 °F)
- remaining housing: −50 to +70 °C (−58 to +158 °F)
- observe derating
- use a protective cover, when operating outdoors

Storage and transport

For storage and transportation, pack the device to protect it against impact. The original packing offers the best protection for this. The permitted storage temperature is −50 to +85 °C (−58 to +185 °F).

Climate class

DIN EN 60068-2-38/IEC 68-2-38: Z/AD check

Vibration resistance

DIN EN 60068-2-64/IEC 68-2-64: 20 to 2 000 Hz, 0.01 g^2/Hz

Shock resistance

DIN EN 60068-2-27/IEC 68-2-27: 30 g acceleration

Cleaning

Housing

Make sure that the cleaning agent used does not corrode the housing surface or the seals.

Probe

Depending on the application, buildup (contamination and soiling) can form on the probe rope. A high degree of material buildup can affect the measurement result. If the medium tends to create a high degree of buildup, regular cleaning is recommended. When cleaning, it is important to make sure that the insulation of the probe rope is not damaged. Make sure the material is resistant to used cleaning agent.

Degree of protection

All protection degree regarding EN60529.

Type4X protection degree regarding NEMA250.

Polyester housing F16
Protection degree:
- IP66
- IP67
- Type4X

Stainless steel housing F15
Protection degree:
- IP66
- IP67
- Type4X

Aluminum housing F17
Protection degree:
- IP66
- IP67
- Type4X

Aluminum housing F13 with gas-tight process seal
Protection degree:
- IP66
- IP68 [6)]
- Type4X

Stainless steel housing F27 with gas-tight process seal
Protection degree:
- IP66
- IP67
- IP68 [6)]
- Type4X

Aluminum housing T13 with gas-tight process seal and separate connection compartment (Ex d)
Protection degree:
- IP66
- IP68 [6)]
- Type4X

Separate housing
Protection degree:
- IP66
- IP68 [6)]
- Type4X

Electromagnetic compatibility (EMC)

Interference emission to EN 61326, Electrical Equipment Class B. Interference immunity to EN 61326, Annex A (Industrial) and NAMUR Recommendation NE 21 (EMC).

A standard commercial instrument cable can be used.

Process

Process temperature range

The following diagrams apply for:
- insulation
  - PTFE
  - PFA
  - FEP
- standard applications outside hazardous areas

The temperature is restricted to T_a −40 °C (−40 °F) when the polyester housing F16 is used or if additional option B is selected.

6) Only with M20 cable entry or G½ thread.

Probe with compact housing

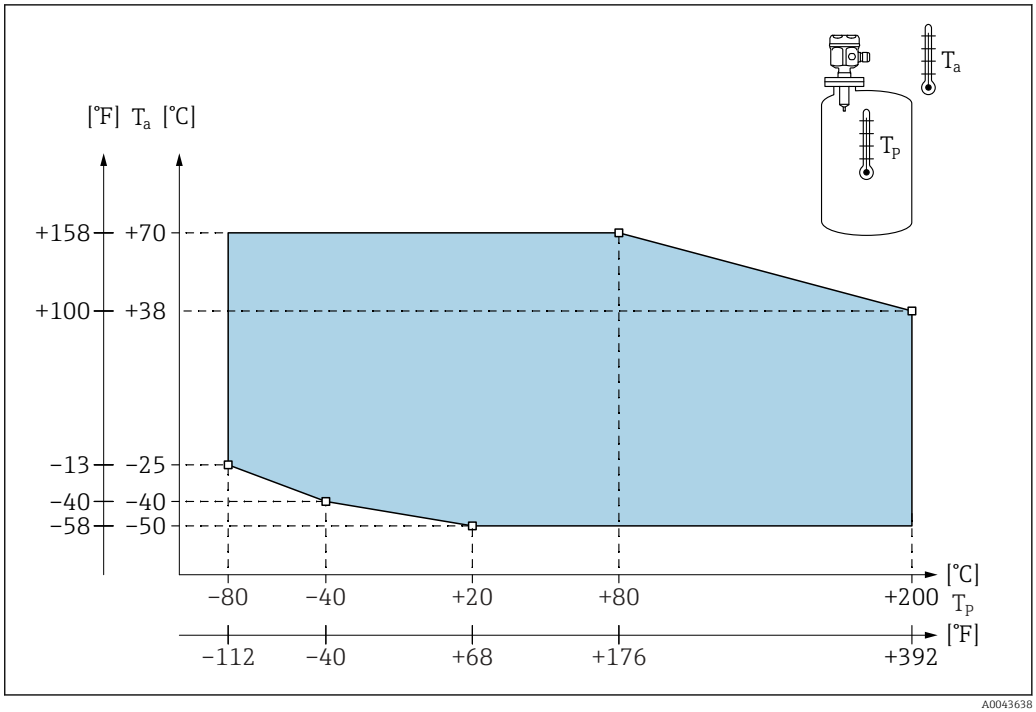

18 *Process pressure range diagram: probe with compact housing*

T_a *Ambient temperature*
T_p *Process temperature*

Probe with separate housing

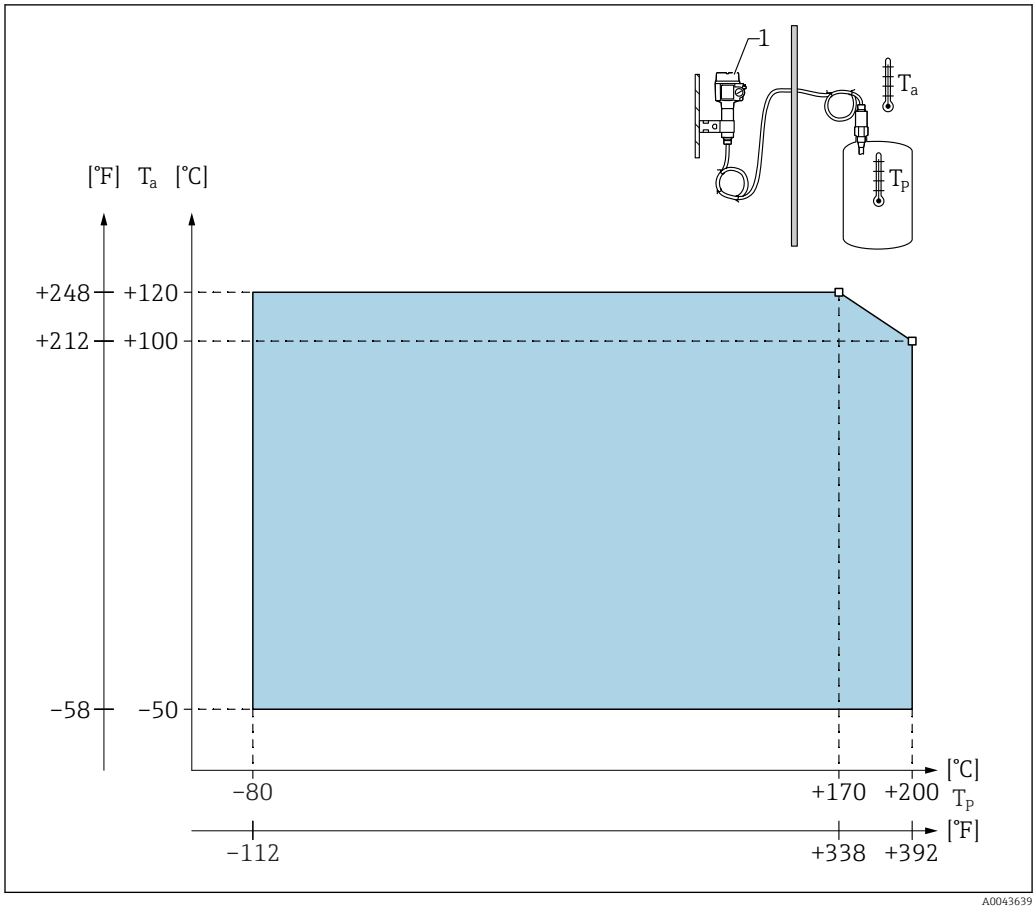

19 *Process pressure range diagram: probe with separate housing*

T_a *Ambient temperature*
T_p *Process temperature*
1 *The permitted ambient temperature at the separate housing is the same as indicated for the compact housing.*

Influence of process temperature

Error in case of fully insulated probes typically 0.13 %/K related to the full-scale value.

Process pressure limits

The process pressure limits depends on process connections.

See also chapter "Process connections" → 27.

Rope probe without inactive length or with inactive length in 316L

E+H Configurator settings:
- Feature: 20
- Options: 1, 2, 5

- −1 to 25 bar (−14.5 to 362.5 psi)
- −1 to 100 bar (−14.5 to 1450 psi)
- in regards to an inactive length, the maximum permitted process pressure is 63 bar (913.5 psi)
- for CRN approval and inactive length: the maximum permitted process pressure is 32 bar (464 psi)

Rope probe with fully insulated inactive length

E+H Configurator settings:
- Feature: 20
- Options: 3, 6

−1 to 50 bar (−14.5 to 725 psi)

Refer to the following standards for the pressure values permitted at higher temperatures:

- EN 1092-1: 2005 Table, Appendix G2
  With regard to its resistance and temperature property, the material 1.4435 is identical to 1.4404 (AISI 316L) which is grouped under 13E0 in EN 1092-1 Tab. 18. The chemical composition of the two materials can be identical.
- ASME B 16.5a - 1998 Tab. 2-2.2 F316
- ASME B 16.5a - 1998 Tab. 2.3.8 N10276
- JIS B 2220

The lowest value from the derating curves of the device and the selected flange applies.

Pressure and temperature derating

See also chapter "Process connections" → 27

For rope probes without inactive length or with inactive length in 316L, process connections ¾", 1", flanges <DN50, <ANSI 2", <JIS 10K and process connections ¾", 1", flanges <DN50, <ANSI 2", <JIS 10K

Rope insulation: FEP, PFA

E+H Configurator settings:
- Feature: 20
- Options: 1, 2, 5

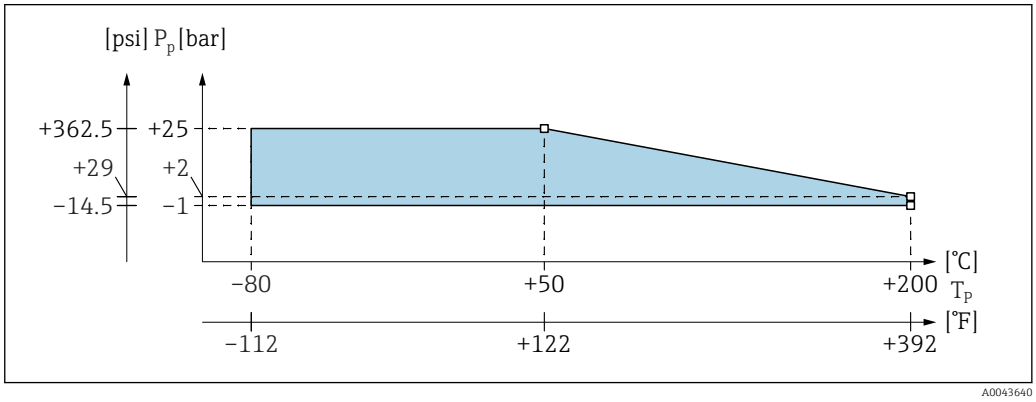

20 *Pressure and temperature derating diagram for rope probes without inactive length or with inactive length*

P_p *Process pressure*
T_p *Process temperature*

For rope probes without inactive length or with inactive length in 316L, process connections 1½", flanges ≥DN50, ≥ANSI 2", ≥JIS 50A

Rope insulation: FEP, PFA

E+H Configurator settings:
- Feature: 20
- Options: 1, 2, 5

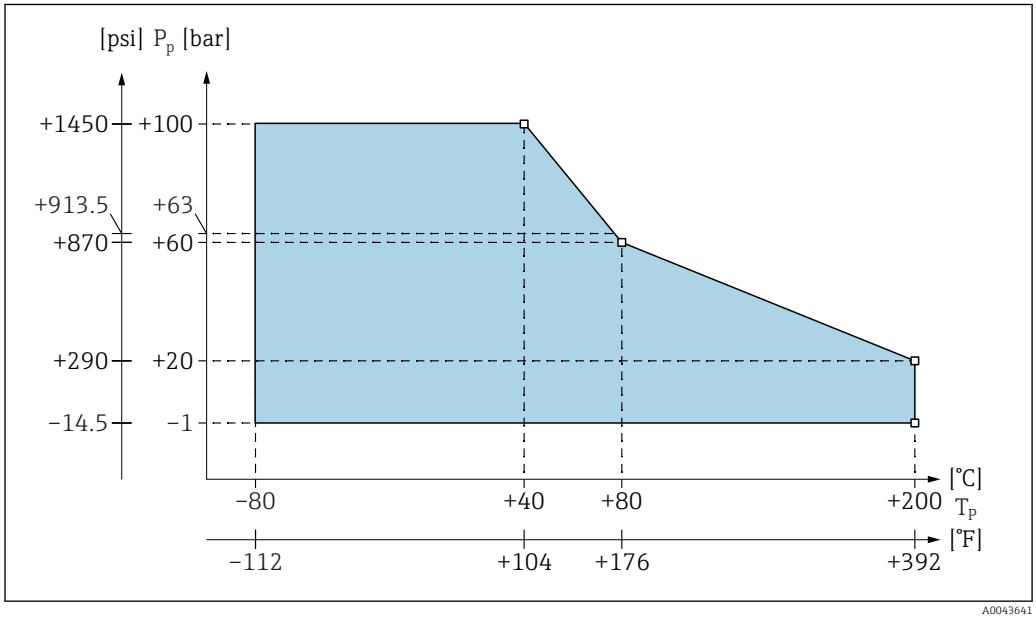

21 *Pressure and temperature derating diagram for rope probes without inactive length or with inactive length*

P_p *Process pressure*
T_p *Process temperature*
63 Process pressure for probes with an inactive length

For rope probe with a fully insulated inactive length

Rope insulation: FEP, PFA

E+H Configurator settings:
- Feature: 20
- Options: 3, 6

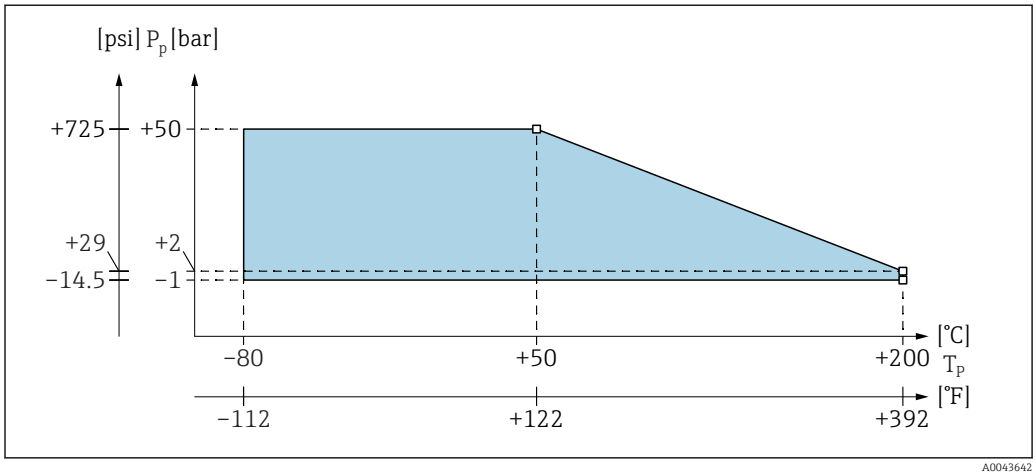

22 *Pressure and temperature derating diagram for fully insulated inactive length rope probes*

P_p *Process pressure*
T_p *Process temperature*

Liquicap M operational range

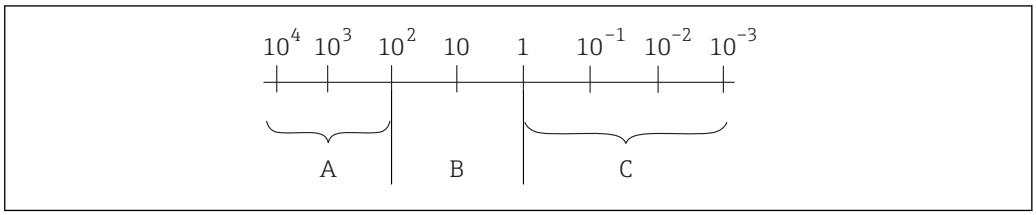

23 The probe operational range. Unit of measurement: µS/cm

1 Factory calibration 0 to 100 %
2 Factory calibration 0 %
A The measuring accuracy is independent of the conductivity and dielectric constant value.
B The measuring accuracy depends on the dielectric constant value and the conductivity of the medium. Measurement not recommendable, select therefore a different measurement principle.
C The measuring accuracy depends on the dielectric constant value.

Typical dielectric constant (DC) values:
- air: 1
- vacuum: 1
- general liquified gases: 1.2 … 1.7
- gasoline: 1.9
- diesel fuel: 2.1
- cyclohexane: 2 … 4
- general oils: 2 … 4
- methyl ether: 5
- butanol: 11
- ammonia: 21
- latex: 24
- ethanol: 25
- caustic soda: 22 … 26
- acetone: 20
- glycerine: 37
- water: 81

Further information and dielectric constants (DC values) in the Download Area of the Endress+Hauser web site:

- Endress+Hauser DC manual (CP01076F)
- Endress+Hauser "DC Values App" on Android and iOS

Mechanical construction

Housing

Polyester housing F16

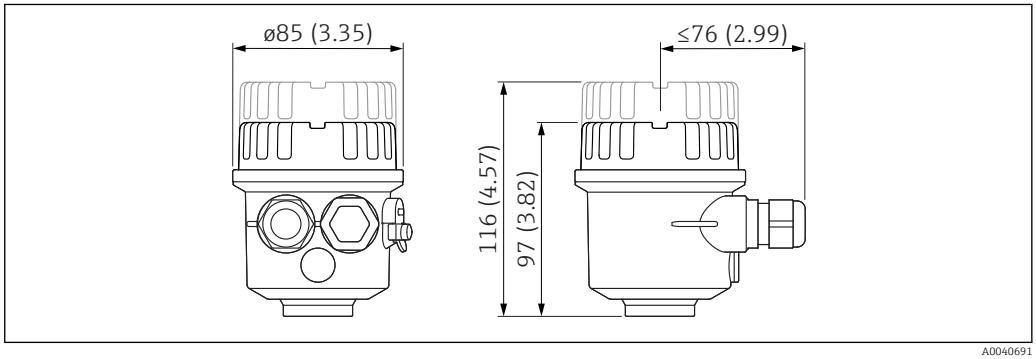

Stainless steel housing F15

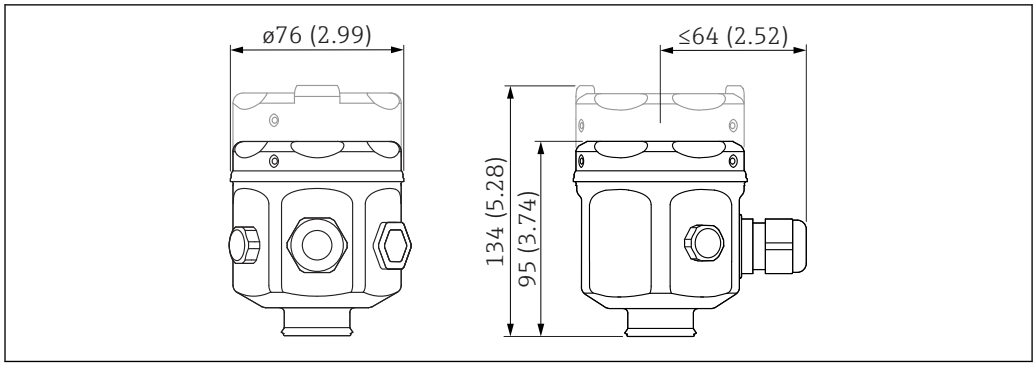

Unit of measurement mm (in)

Aluminium housing F17

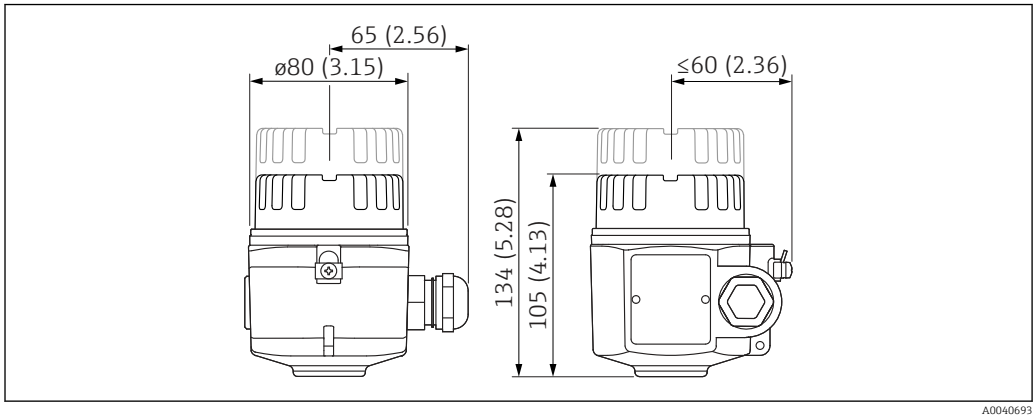

Unit of measurement mm (in)

Aluminum housing F13

With the gas-tight process seal.

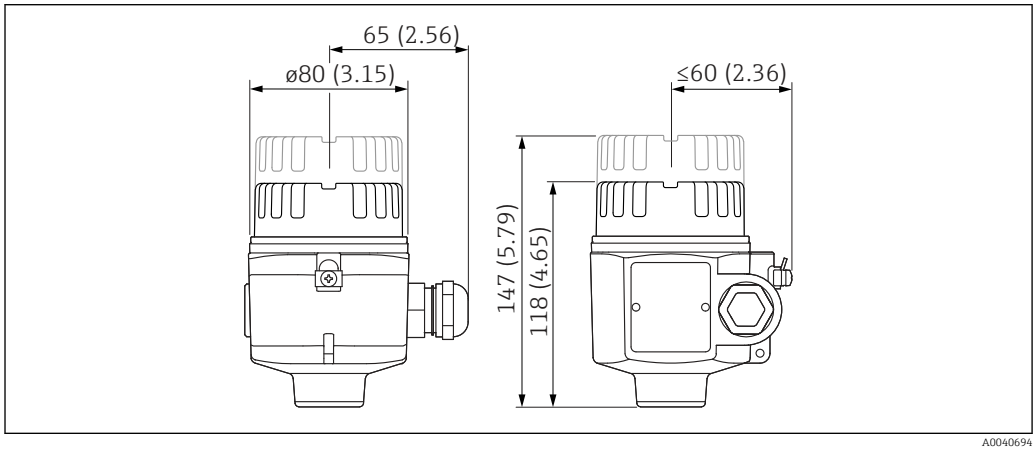

Unit of measurement mm (in)

Stainless steel housing F27

With the gas-tight process seal.

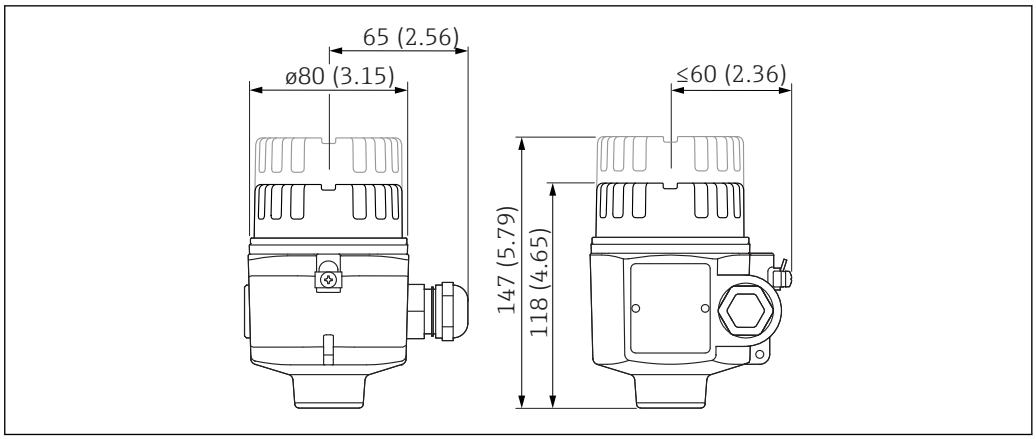

Unit of measurement mm (in)

Aluminum housing T13

With separate connection compartment and gas-tight process seal.

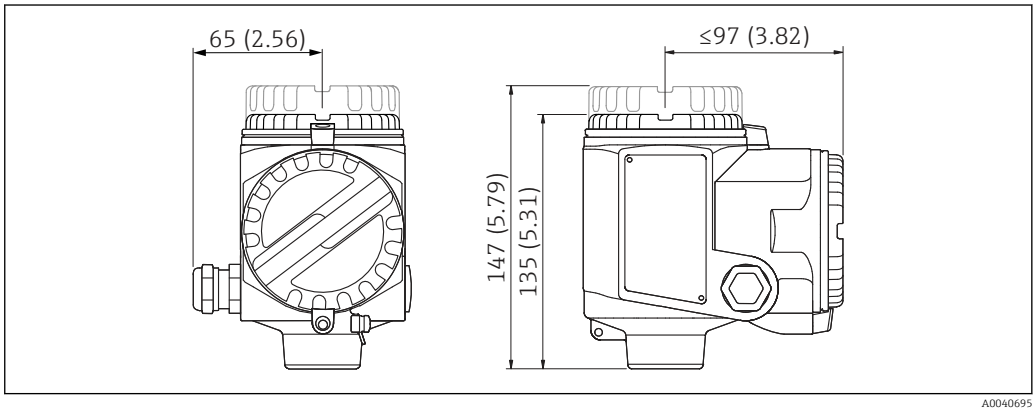

Unit of measurement mm (in)

The extension height of housing with adapter

List of abbreviations:
- G - order code
- H1 - height without display
- H2 - height with display

	A [1]	B [2]	C [3]
	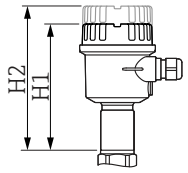	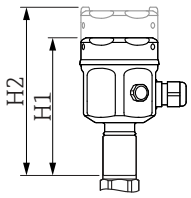	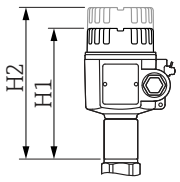
G	2	1	3
H1	143 mm (5.63 in)	141 mm (5.55 in)	150 mm (5.91 in)
H2	162 mm (6.38 in)	179 mm (7.05 in)	179 mm (7.05 in)

1) Polyester housing F16
2) Stainless steel housing F15
3) Aluminium housing F17

	D [1]	E [2]	F [3]
	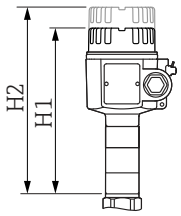 A0040699	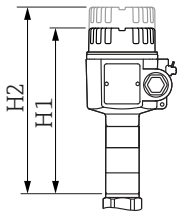 A0040699	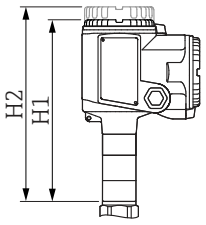 A0040700
G	4	6	5
H1	194 mm (7.64 in)	194 mm (7.64 in)	210 mm (8.27 in)
H2	223 mm (8.78 in)	223 mm (8.78 in)	223 mm (8.78 in)

1) Aluminum housing F13
2) Stainless steel housing F27
3) Aluminum housing T13

Process connections

Thread G - DIN EN ISO 228-1

Seal material: elastomer

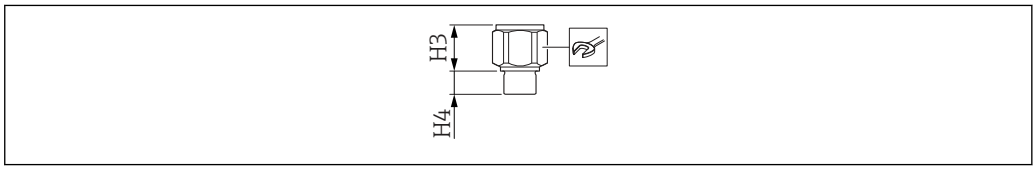

A0042280

List of abbreviations:
- p_{max} - maximum pressure value
- H3 - cone heights
- H4 - thread heights

A [1]			B [2]
E+H Cofigurator settings:			
Feature: 20 Option: 1, 2, 5			**Feature: 20 Option: 3, 6**
Version			
G¾	G1	G1½	G1½
Order code			
GDJ	GEJ	GGJ	GGJ
p_{max}			
25 bar (362.5 psi)	25 bar (362.5 psi)	100 bar (1450 psi)	50 bar (725 psi)
H3			
38 mm (1.5 in)	38 mm (1.5 in)	41 mm (1.61 in)	85 mm (3.35 in)
H4			
19 mm (0.75 in)	19 mm (0.75 in)	25 mm (0.98 in)	25 mm (0.98 in)
 A0011222			
41	41	55	55

1) Rope probe without inactive length or with inactive length in 316L
2) Rope probe with fully insulated inactive length

Thread NPT - ANSI B 1.20.1

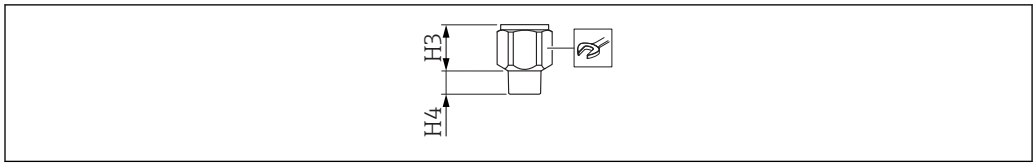

A0040702

List of abbreviations:
- p_{max} - maximum pressure value
- H3 - cone heights
- H4 - thread heights

A [1]						B [2]
E+H Cofigurator settings:						
Feature: 20 Option: 1, 2, 5						**Feature: 20 Option: 3, 6**
Version						
NPT½	NPT¾	NPT1	NPT¾	NPT1	NPT1½	NPT1½
Order code						
RCJ	RDJ	REJ	RDJ	REJ	RGJ	RGJ
p_{max}						
25 bar (362.5 psi)	25 bar (362.5 psi)	25 bar (362.5 psi)	25 bar (362.5 psi)	25 bar (362.5 psi)	100 bar (1450 psi)	50 bar (725 psi)
H3						
38 mm (1.5 in)	38 mm (1.5 in)	38 mm (1.5 in)	38 mm (1.5 in)	38 mm (1.5 in)	41 mm (1.61 in)	85 mm (3.35 in)
H4						
19 mm (0.75 in)	19 mm (0.75 in)	19 mm (0.75 in)	19 mm (0.75 in)	19 mm (0.75 in)	25 mm (0.98 in)	25 mm (0.98 in)
 A0011222						
41	41	41	41	41	55	55

1) Rope probe without inactive length or with inactive length in 316L
2) Rope probe with fully insulated inactive length

Threaded pipe joint - DIN11851

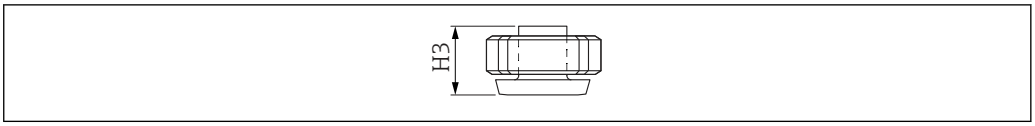

A0040703

List of abbreviations:
- p_{max} - maximum pressure value
- H3 - cone heights

A [1]
E+H Configurator settings:
Feature: 20 **Option: 1, 2, 5**
Version
DN50 PN40
Order code
MRJ
p_{max}
40 bar (580 psi)
H3
66 mm (2.6 in)
Surface roughness [2]
≤0.8 µm (31.5 µin)

1) Rope probe without inactive length or with inactive length in 316L
2) Not in conjunction with inactive length

Tri-Clamp - ISO2852

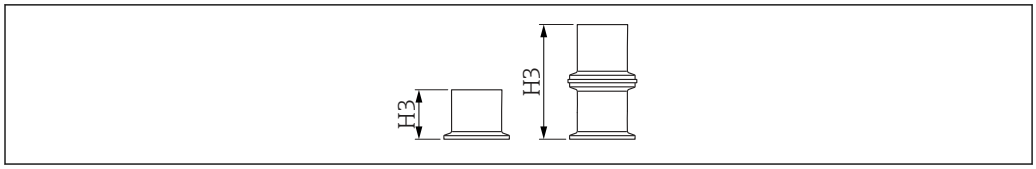

A0040704

List of abbreviations:
- p_{max} - maximum pressure value
- H3 - cone heights

A [1]		
E+H Configurator settings:		
Feature: 20 **Option: 1, 2, 5**		
Version		
DN25 1 in	DN38 1.5 in	DN40-51 2 in
Order code		
TCJ	TJJ	TDJ
p_{max} [2]		
25 bar (362.5 psi)	25 bar (362.5 psi)	40 bar (580 psi)
H3		
57 mm (2.24 in)	57 mm (2.24 in)	66 mm (2.6 in)
Surface roughness [3]		
≤ 0.8 µm (31.5 µin)	≤ 0.8 µm (31.5 µin)	≤ 0.8 µm (31.5 µin)

1) Rope probe without inactive length or with inactive length in 316L
2) In the event of CRN approval, the maximum permitted process pressure is 11 bar (159.5 psi).
3) Not in conjunction with inactive length

Tri-Clamp clad - ISO2852

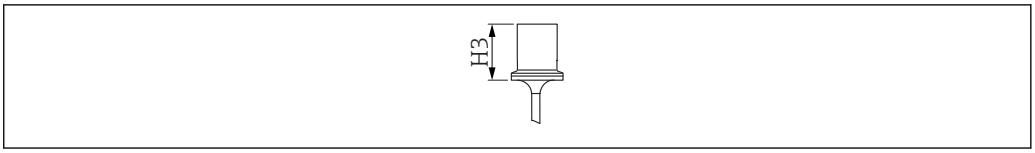

A0040705

List of abbreviations:
- p_{max} - maximum pressure value
- H3 - cone heights

A [1]	
E+H Configurator settings:	
Feature: 20 **Option: 1**	
Version	
DN38 1.5 in	DN40-51 2 in
Order code	
TJK	TDK
p_{max} [2]	
16 bar (232 psi)	16 bar (232 psi)
H3	
66 mm (2.6 in)	66 mm (2.6 in)
Surface roughness [3]	
≤ 0.8 µm (31.5 µin)	≤ 0.8 µm (31.5 µin)

1) Rope probe without inactive length
2) In the event of CRN approval, the maximum permitted process pressure is 11 bar (159.5 psi).
3) Not in conjunction with inactive length

Flanges

The process pressure depends on the chosen feature and the flange.

EN1092-1

ANSI B 16.5

JIS B2220

Version and order code:
- EN / B##
- ANSI / A##
- JIS / K##

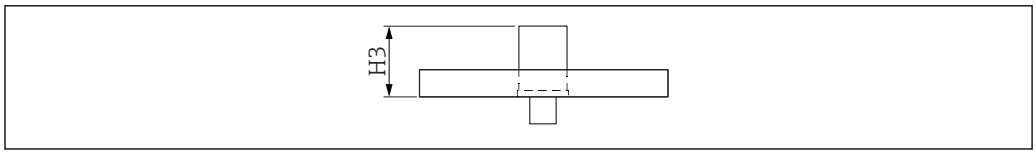

A0040706

A [1]		B [2]
< DN50, < ANSI 2", < JIS 50A	≥ DN50, ≥ ANSI 2", ≥ JIS 50A	
E+H Configurator settings:		
Feature: 20 Option: 1, 2, 5		**Feature: 20 Option: 3, 6**
p_{max} [3]		
25 bar (362.5 psi)	100 bar (1450 psi)	50 bar (725 psi)
H3		
57 mm (2.24 in)	66 mm (2.6 in)	111 mm (4.37 in)
Dimensions with inactive length		
-	56 mm (2.2 in)	-
Additional information		
[4]	[4]	[5]

1) Rope probe without inactive length or with inactive length in 316L
2) Rope probe with fully insulated inactive length
3) Depends on flange
4) Also clad (PTFE)
5) Only clad (PTFE)

Hygiene connections for rope probes without inactive length

Thread G1 with flush-mounted seal

For weld-in adapter, see chapter "Accessories" → 49.

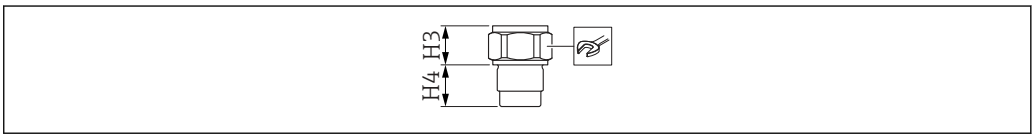

A0040708

List of abbreviations:
- p_{max} - maximum pressure value
- H3 - cone heights
- H4 - thread heights

A [1]
E+H Configurator settings:
Feature: 20 **Option: 1**
Version
G1
Order code
GWJ
p_{max}
25 bar (362.5 psi)
H3
30 mm (1.18 in)
H4
27 mm (1.06 in)
 A0011222
41

1) Rope probe without inactive length

Adapter 44 mm (1.73 in) with flush-mounted seal

Version
Universal adapter

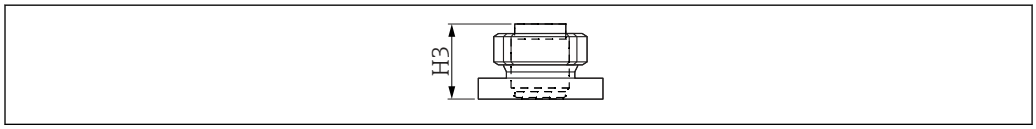

A0040709

A [1]
E+H Configurator settings:
Feature: 20 **Option: 1**
Order code
UPJ
p_{max} [2]
16 bar (232 psi)
H3
57 mm (2.24 in)

1) Rope probe without inactive length
2) Tightening torque 10 Nm (7.37 lbf ft)

Fully insulated rope probes

- The active probe length L1 is always fully insulated.
- Total length of probe from sealing surface: L = L1 + L3.
- All rope probes are prepared for tensioning in containers (tensioning weight and anchor hole)
  - In case of media < 1 mS/cm appropriate measures must be taken, e.g. a metallic reference point or a metallic tank.
  - Back-and-forth swinging of the rope directly influences the switch point. The probe must therefore be tightened.
- Not suitable for agitator tanks, high-viscosity liquids and plastic tanks.
- Thickness of rope insulation: 0.75 mm (0.03 in)
- Length tolerances L1, L3:
  - < 1 m (3.3 ft): 0 to −10.0 mm (0 to −0.39 in)
  - 1 to 3 m (3.3 to 9.8 ft): 0 to −20 mm (0 to −0.79 in)
  - 3 to 6 m (9.3 to 20 ft): 0 to −30 mm (0 to −1.18 in)
  - 6 to 12 m (20 to 39 ft): 0 to −40 mm (0 to −1.57)

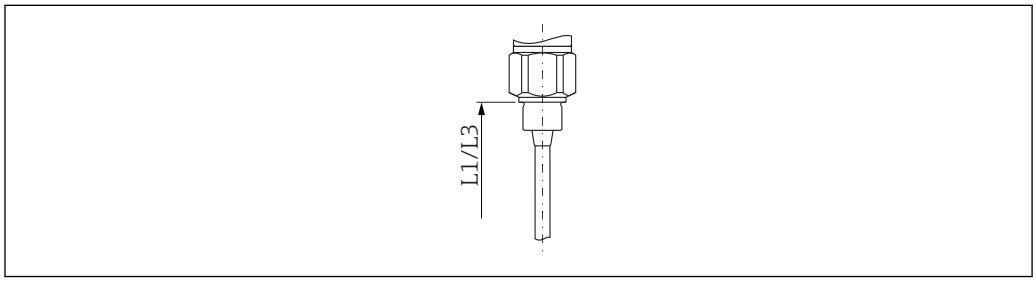

A0040755

A [1]	B [2]
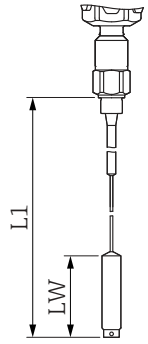	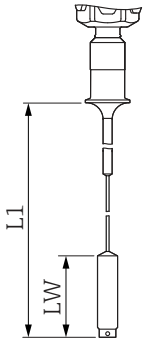
Total length (L)	
420 to 10 000 mm (16.5 to 394 in)	420 to 10 000 mm (16.5 to 394 in)
Active rope length (L1)	
420 to 10 000 mm (16.5 to 394 in)	420 to 10 000 mm (16.5 to 394 in)
Inactive length (L3) [3]	
-	-
Inactive length diameter	
-	-
Weight lenght (LW)	
120 mm (4.72 in)	120 mm (4.72 in)
Probe rope diameter	
4 mm (0.16 in)	4 mm (0.16 in)
Anchor weight diameter	
22 mm (0.87 in)	22 mm (0.87 in)
Anchor hole diameter	
5 mm (0.2 in)	5 mm (0.2 in)
Tensile loading capacity at 20 °C (68 °F)	
200 N (44.96 lbf)	200 N (44.96 lbf)
For aggressive liquids	
✔	✔
For use in mounting nozzles	
-	-
For conductive liquids >100 µS/cm	
-	-
For non-conductive liquids < 1 µS/cm	
-	-
The probe can be used in the event of condensate on tank ceiling	
-	-
For high-viscosity liquids	
-	-

1) Rope probe
2) Rope probe with clad Tri-Clamp
3) The Ø value of the inactive length depends on the process connection selected, see product configurator on the web site www.endress.com

C [1]		D [2]
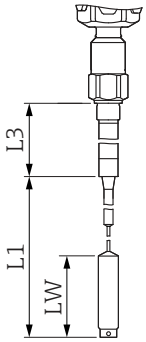 A0040758		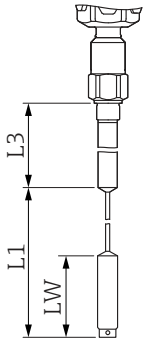 A0040759
Total length (L)		
570 to 12 000 mm (22.4 to 472 in)		570 to 11 000 mm (22.4 to 433 in)
Active rope length (L1)		
420 to 10 000 mm (16.5 to 394 in)		420 to 10 000 mm (16.5 to 394 in)
Inactive length (L3) [3]		
100 to 2 000 mm (3.94 to 78.7 in)		150 to 1 000 mm (5.91 to 39.4 in)
Inactive length diameter		
22 mm (0.87 in)	43 mm (1.69 in)	22 mm (0.87 in) [4]
Weight lenght (LW)		
120 mm (4.72 in)		120 mm (4.72 in)
Probe rope diameter		
4 mm (0.16 in)		4 mm (0.16 in)
Anchor weight diameter		
22 mm (0.87 in)		22 mm (0.87 in)
Anchor hole diameter		
5 mm (0.2 in)		5 mm (0.2 in)
Tensile loading capacity at 20 °C (68 °F)		
200 N (44.96 lbf)		200 N (44.96 lbf)
For aggressive liquids		
-		✔
For use in mounting nozzles		
✔		✔
For conductive liquids >100 µS/cm		
✔		✔
For non-conductive liquids < 1 µS/cm		
✔		✔
The probe can be used in the event of condensate on tank ceiling		
✔		✔
For high-viscosity liquids		
-		-

1) Rope probe with inactive length (uninsulated)
2) Rope probe with fully insulated inactive length
3) The Ø value of the inactive length depends on the process connection selected, see product configurator on the web site www.endress.com
4) Probe tube

Weight

Housing with process connection:
- F15, F16, F17, F13 approximately 4.00 kg (8.82 lb)
- T13 approximately 4.50 kg (9.92 lb)
- F27 approximately 5.50 kg (10.1 lb)

Flange weight
Probe rope: 0.04 kg/m (0.02 lb/ft)

Technical data: probe

Capacitance values of the probe

The basic capacitance of the probe is approximately 18 pF.

Additional capacitance

Mount the probe at a minimum distance of 50 mm (1.97 in) from a conductive container wall: approximately 1.0 pF/100 mm (3.94 in) in the air for a rope probe.

Insulated probe rope in water: approximately 19 pF/100 mm (3.94 in).

Materials

Material specifications as per AISI and DIN-EN.

In contact with the process
- Probe rope: 316 (1.4401)
- process connection: 316L (1.4435 or 1.4404)
- flat seal for process connection G¾ or G1: elastomer fiber, asbestos-free
- sealing ring for process connection G½, G¾, G1, G1½: elastomer fiber, asbestos-free, resistant to lubricants, solvents, steam, weak acids, and alkalis to 300 °C (572 °F) and to 100 bar (1 450 psi)

Not in contact with the process
- ground terminals on housing (exterior): 304 (1.4301)
- the nameplate on housing (exterior): 304 (1.4301)
- cable glands
  - housing F13, F15, F16, F17, F27: polyamide (PA) with C, D, E, F, H, M, J, P, S, 1, 4, 5 approval: nickel-plated brass
  - housing T13: nickel-plated brass
- polyester housing F16: PBT-FR with a cover made of PBT-FR or with sight glass made of PA12
  - cover seal: EPDM
  - adhesive nameplate: polyester foil (PET)
  - pressure compensation filter: PBT-GF20
- stainless steel housing F15: 316L (1.4404)
  - cover seal: silicone
  - cover clamp: 304 (1.4301)
  - pressure compensation filter: PBT-GF20, PA
- aluminum housing F17/F13/T13: EN-AC-AlSi10Mg, plastic-coated
  - cover seal: EPDM
  - cover clamp: nickel-plated brass
  - pressure compensation filter: silicone (not T13)
- stainless steel housing F27: 316L (1.4435)
  - cover seal: FVMQ, optional: EPDM seal available as a spare part
  - cover clamp: 316L (1.4435)

Operability

2-wire AC electronic insert FEI51

Power supply
- Supply voltage: 19 to 253 V_{AC}
- Power consumption: < 1.5 W
- Residual current consumption: < 3.8 mA
- Short-circuit protection
- Overvoltage category: II

Electrical connection

Connect the electronic insert in series with an external load.

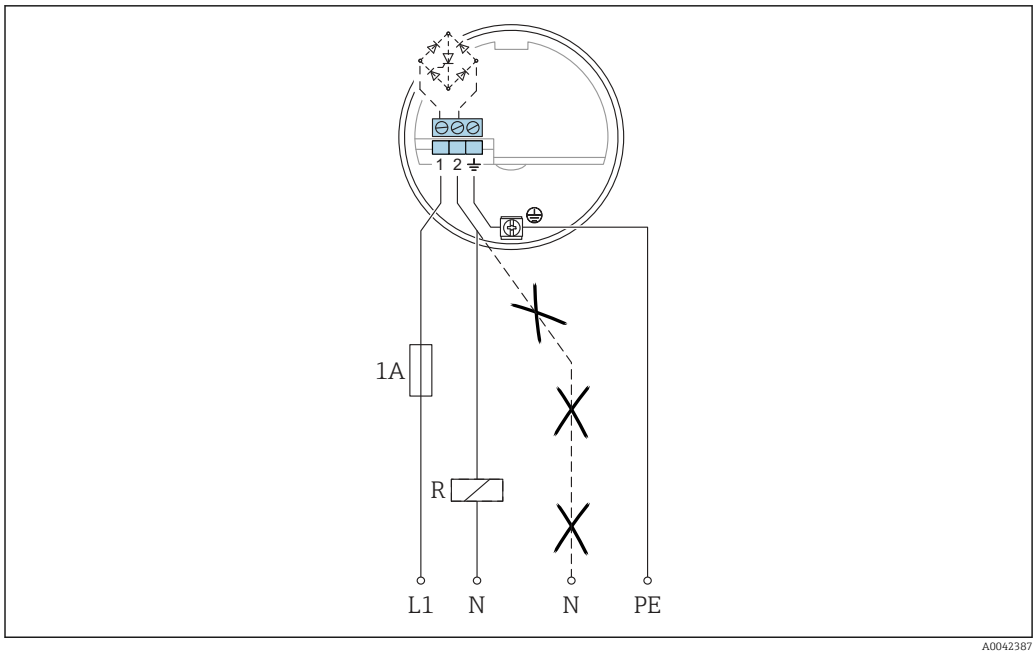

A0042387

L1 L1 phase cable
N Neutral cable
PE Grounding cable
R External load

Make sure that:
- the residual current consumption is in blocked state.
- for low voltage:
  - voltage drop across the load is such that the minimum terminal voltage at the electronic insert 19 V when blocked is not undershot
  - voltage drop across the electronics when switched through is observed (up to 12 V)
- a relay cannot de-energize with holding power below 1 mA [7)]

When selecting the relay, pay attention to the holding power and rated power.

Signal on alarm

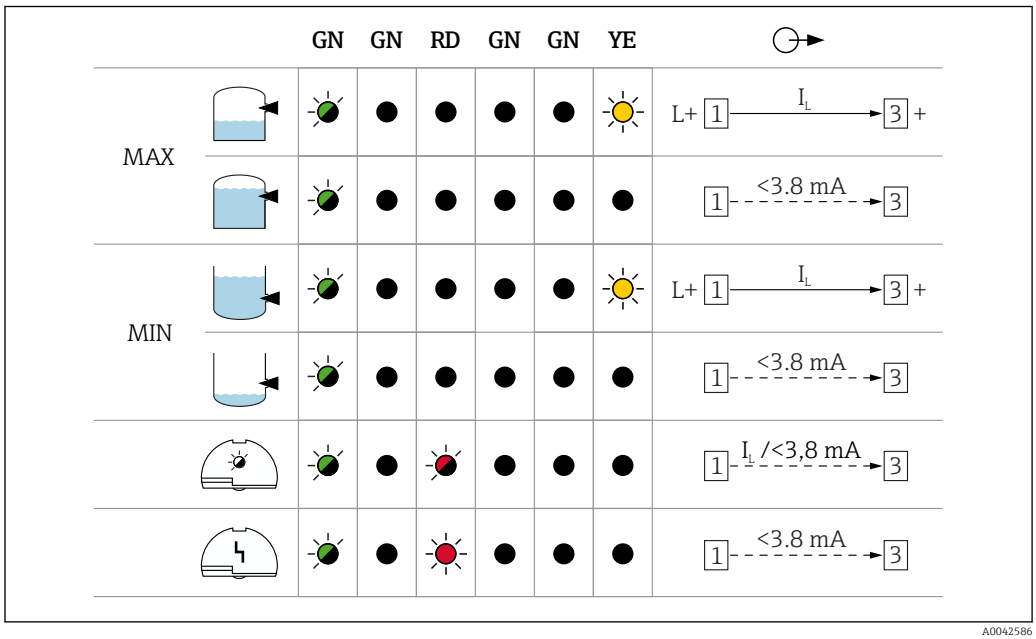

A0042586

7) If not: A resistor should be connected parallel to the relay (RC module available on request).

Output signal

Output signal on power failure or in the event of damage to the sensor: < 3.8 mA

Connectable load

- For relays with a minimum holding power or rated power:
  - > 2.5 VA at 253 V_{AC} (10 mA)
  - > 0.5 VA at 24 V_{AC} (20 mA)
- Relays with a lower holding power or rated power can be operated by means of an RC module connected in parallel.
- For relays with a maximum holding power or rated power:
  - < 89 VA at 253 V_{AC}
  - < 8.4 VA at 24 V_{AC}
- Voltage drop across FEI51:
  maximum 12 V
- Residual current with blocked thyristor:
  3.8 mA
- Load switched directly into the power supply circuit via the thyristor.

DC PNP electronic insert FEI52

Power supply

- Supply voltage: 10 to 55 V_{DC}
- Ripple:
  - maximum 1.7 V
  - 0 to 400 Hz
- Current consumption: < 20 mA
- Power consumption without load: maximum 0.9 W
- Power consumption with full load (350 mA): 1.6 W
- Reverse polarity protection: yes
- Separation voltage: 3.7 kV
- Overvoltage category: II

Electrical connection

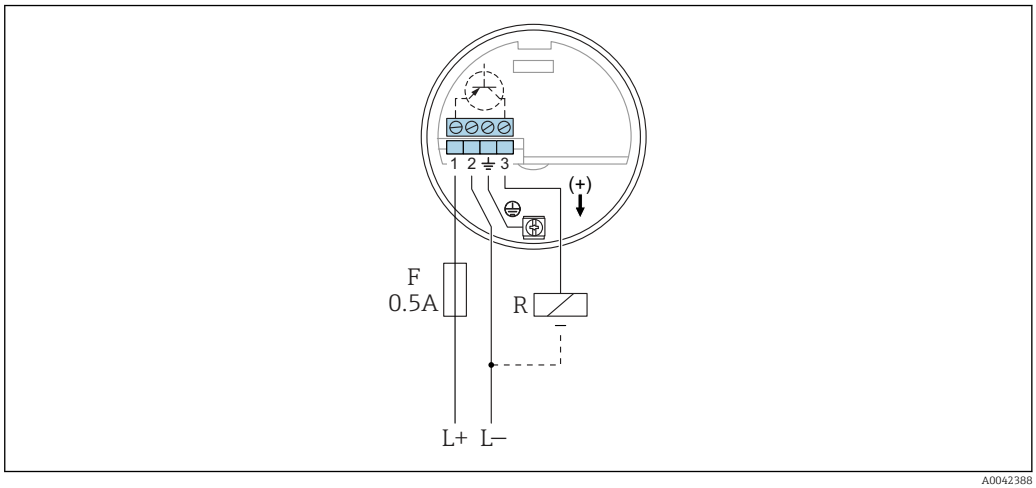

A0042388

L+ Power input +
L- Power input -
F Fuse 0.5 A
R External load: I_{max} =350 mA U_{max} = 55 V_{DC}

Preferably in conjunction with programmable logic controllers (PLC), DI modules in accordance with EN 61131-2.

Positive signal present at the switch output of the electronic system (PNP).

Output signal

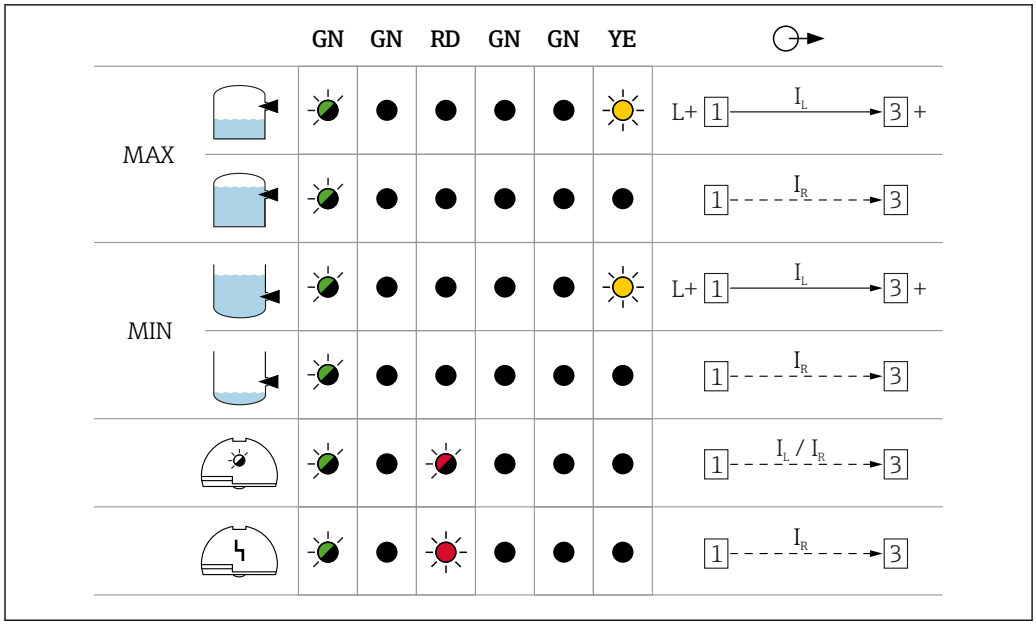

A0042587

Signal on alarm

Output signal on power failure or in the event of device failure:
I_R < 100 µA

Connectable load

- Load switched via transistor and separate PNP connection: maximum 55 V
- Load current: maximum 350 mA cyclical overload and short-circuit protection
- Residual current: < 100 µA with transistor blocked
- Capacitance load:
  - maximum 0.5 µF at 55 V
  - maximum 1 µF at 24 V
- Residual voltage: < 3 V for transistor switched through

3-wire electronic insert FEI53

Power supply

- Supply voltage: 14.5 V_{DC}
- Current consumption: < 15 mA
- Power consumption: maximum 230 mW
- Reverse polarity protection: yes
- Separation voltage: 0.5 kV

Electrical connection

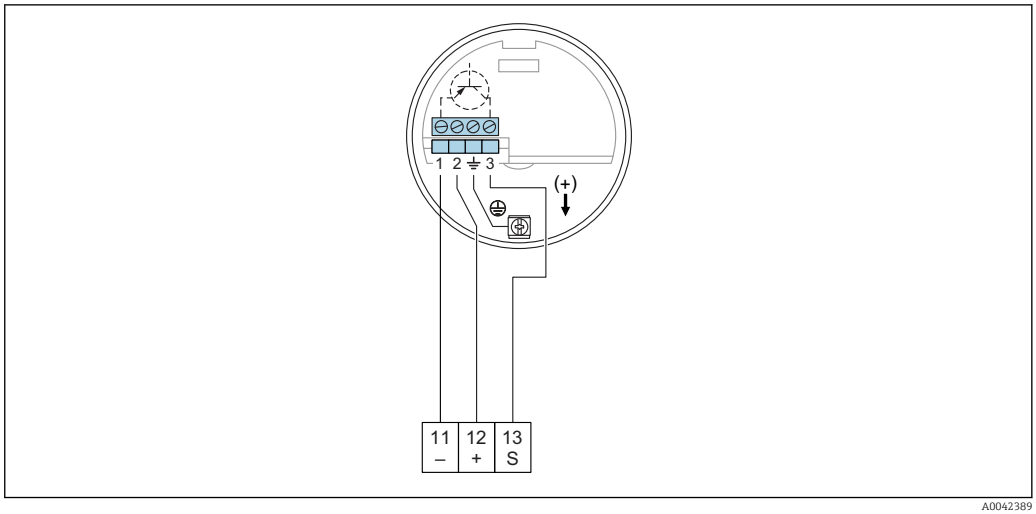

A0042389

11 The negative terminal in Nivotester FTC325
12 The positive terminal in Nivotester FTC325
S Signal terminal in Nivotester FTC325

3 to 12 V signal.

For connecting to the switching unit, Nivotester FTC325 3–WIRE from Endress+Hauser.

Switching between minimum and maximum Safety in the Nivotester FTC325 3-WIRE.

Point level adjustment directly at the Nivotester.

Output signal

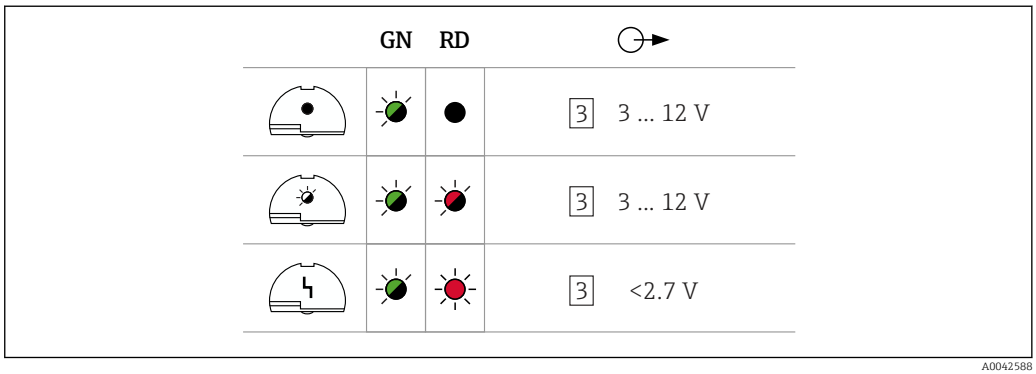

A0042588

Signal on alarm

Voltage at terminal 3 opposite terminal 1: < 2.7 V

Connectable load

- Floating relay contacts in the connected switching unit Nivotester FTC325 3-WIRE
- For the contact load capacity, refer to the technical data of the switching device

AC and DC with relay output electronic insert FEI54

Power supply

- Supply voltage:
  - 19 to 253 V_{AC}50 to 60 Hz
  - 19 to 55 V_{DC}
- Power consumption: 1.6 W
- Reverse polarity protection: yes
- Separation voltage: 3.7 kV
- Overvoltage category: II

Electrical connection

Please note the different voltage ranges for AC and DC.

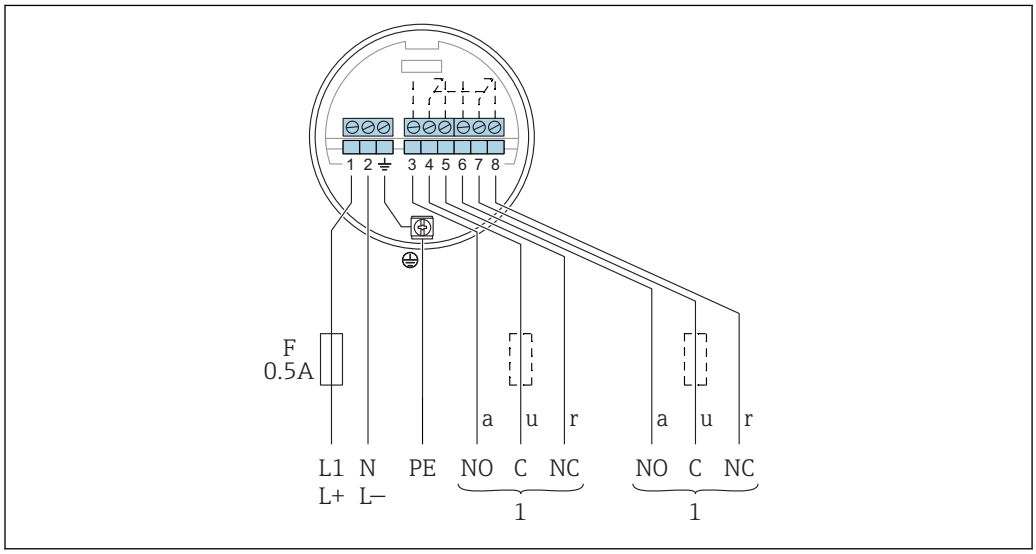

F *Fuse 0.5 A*
L1 *Phase (AC) terminal*
L+ *The positive (DC) terminal*
N *Neutral (AC) terminal*
L- *The negative (DC) terminal*
PE *Grounding cable*
1 *Refer also to connectable load*

When connecting an instrument with high inductance, provide a spark arrester to protect the relay contact. A fine-wire fuse (depending on the load connected) protects the relay contact on short-circuiting. Both relay contacts switch simultaneously.

Output signal

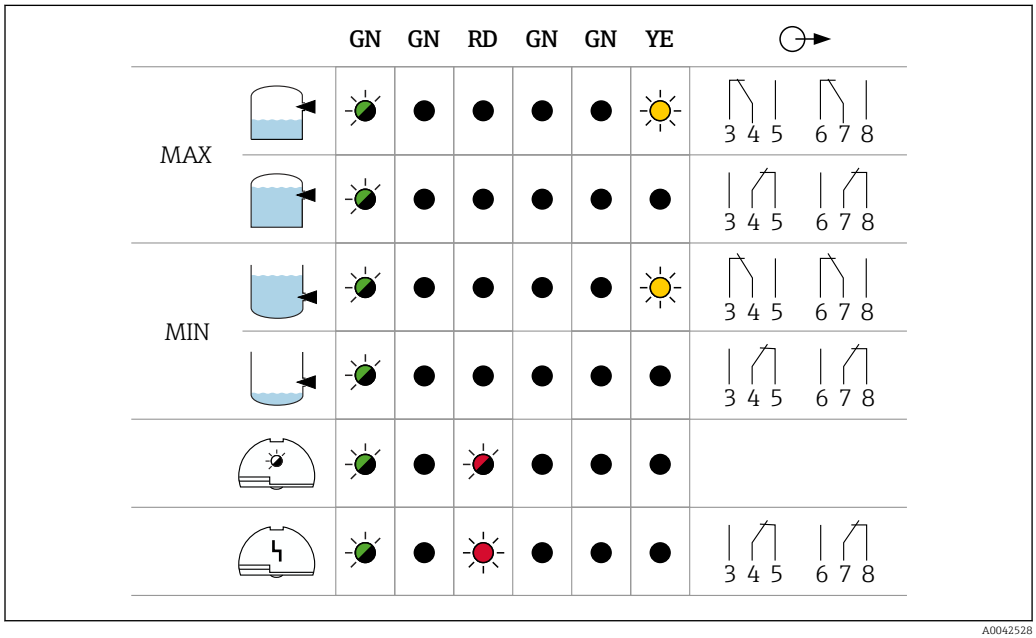

Signal on alarm

Output signal on power failure or in the event of device failure: relay de-energized

Connectable load

- Loads switched via 2 floating changeover contacts (DPDT)
- maximum values (AC):
  - I_{max} = 6 A
  - U_{max} = 253 V_{AC}
  - P_{max} = 1 500 VA at cosφ = 1
  - P_{max} = 750 VA at cosφ > 0.7
- maximum values (DC):
  - I_{max} = 6 A at 30 V_{DC}
  - I_{max} = 0.2 A at 125 V_{DC}
- The following applies when connecting a functional low-voltage circuit with double isolation as per IEC 1010:
  sum of voltages of relay output and power supply maximum 300 V

SIL2 / SIL3 electronic insert FEI55

Power supply

- Supply voltage: 11 to 36 V_{DC}
- Power consumption: < 600 mW
- Reverse polarity protection: yes
- Separation voltage: 0.5 kV

Electrical connection

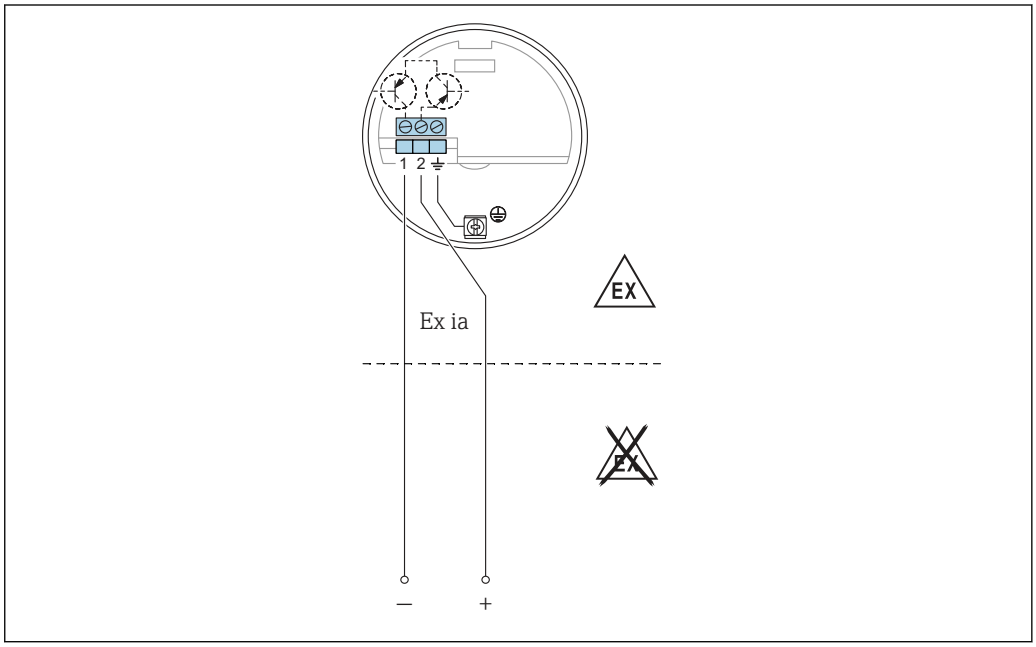

A0042391

Connect the insert to programmable logic controllers (PLC), AI modules 4 to 20 mA in accordance with EN 61131-2.

The point level signal is sent via an output signal jump from 8 to 16 mA.

Output signal

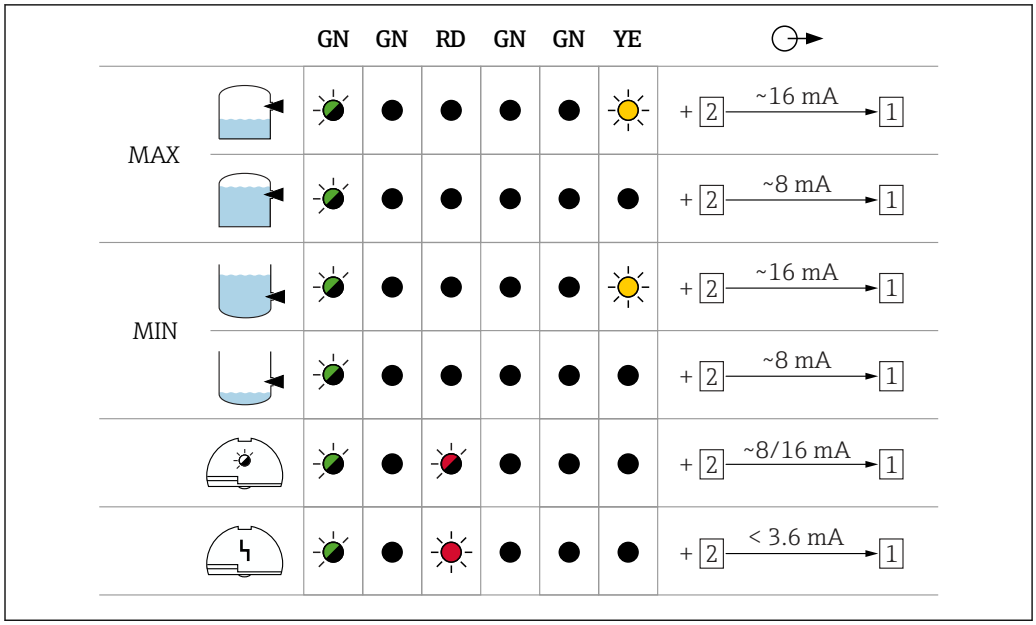

Signal on alarm

Output signal on power failure or in the event of device failure: < 3.6 mA

Connectable load

- U:
  - 11 to 36 V_{DC} for non-hazardous area and Ex ia
  - 14.4 to 30 V_{DC} for Ex d
- I_{max} = 16 mA

PFM electronic insert FEI57S

Power supply

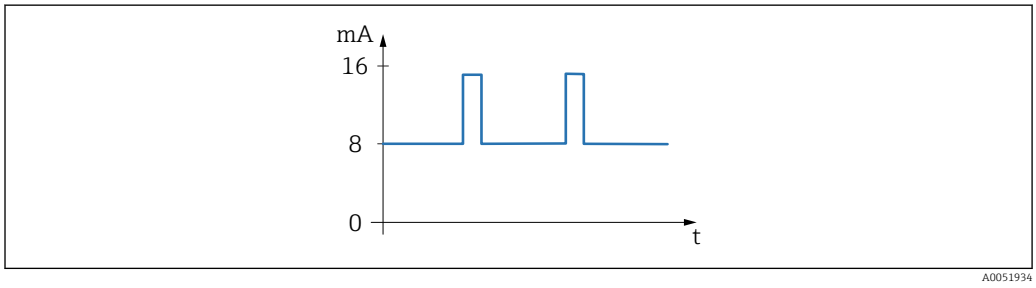

24 PFM signal with frequency 17 to 185 Hz

- Supply voltage: 9.5 to 12.5 V_{DC}
- Power consumption: < 150 mW
- Reverse polarity protection: yes
- Separation voltage: 0.5 kV

Electrical connection

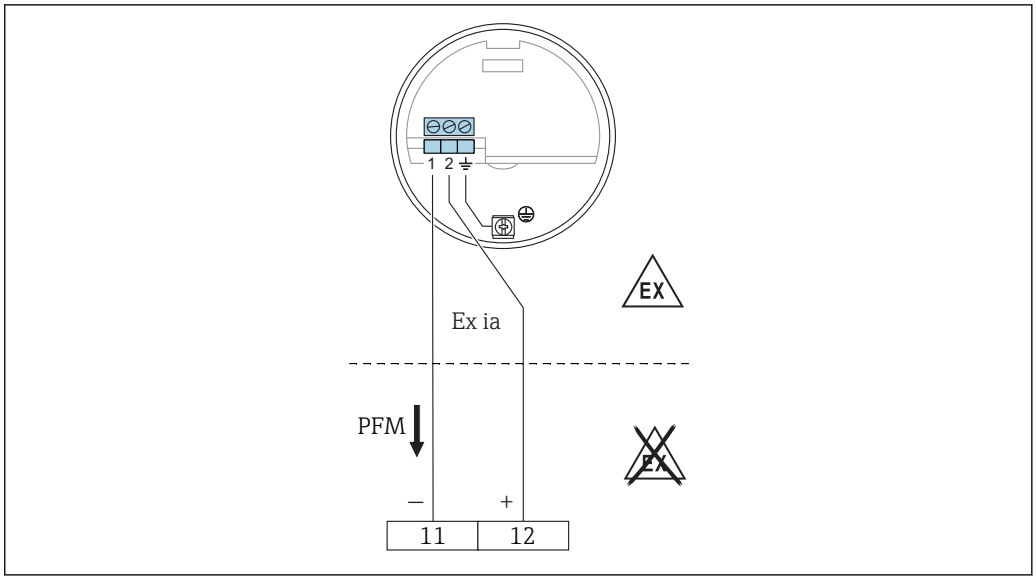

A0050141

11 The negative terminal in Nivotester FTC325
12 The positive terminal in Nivotester FTC325

For connecting to switching unit Nivotester FTC325 from Endress+Hauser.

PFM signal 17 to 185 Hz.

Switching between minimum and maximum safety in the Nivotester.

Output signal

PFM 60 to 185 Hz.

Signal on alarm

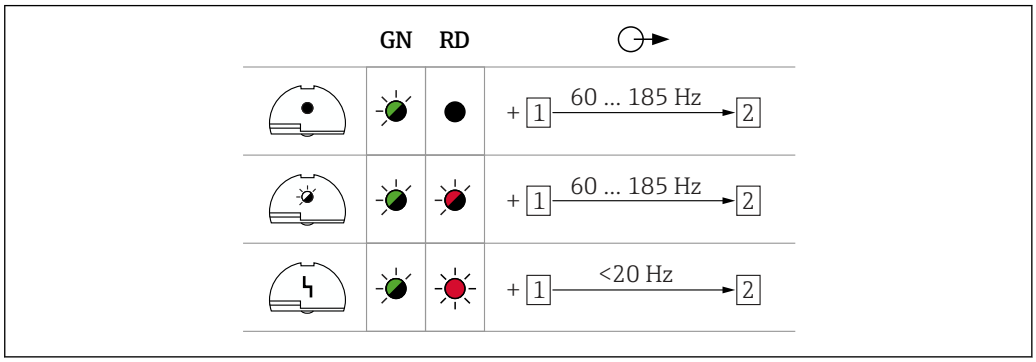

A0042589

Connectable load

- Floating relay contacts in the connected switching unit Nivotester: FTC325 PFM
- For the contact load capacity, refer to the technical data of the switching device.

NAMUR electronic insert FEI58

Power supply

- Power consumption:
  - < 6 mW at I < 1 mA
  - < 38 mW at I = 2.2 to 4 mA
- Interface connection data: IEC 60947-5-6

Electrical connection

In the case of Ex-d operation, the additional function can only be used if the housing is not exposed to an explosive atmosphere.

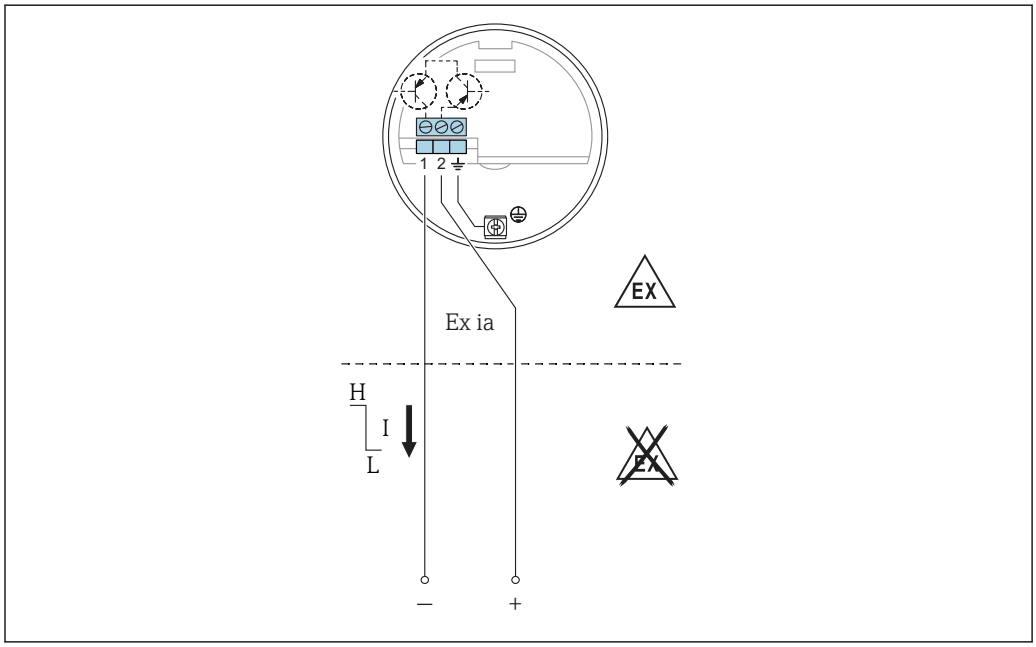

25 *Terminals must be connected to isolating amplifier (NAMUR) IEC 60947-5-6*

For connecting to isolating amplifiers as per NAMUR (IEC 60947-5-6), e.g. Nivotester FTL325N from Endress+Hauser. Change in output signal from high to low current in event of point level detection.

Additional function:
Test key on the electronic insert. Pressing the key interrupts the connection to the isolating amplifier.

Connection to Multiplexer:
Set 3 s as the cycle time at least.

Output signal

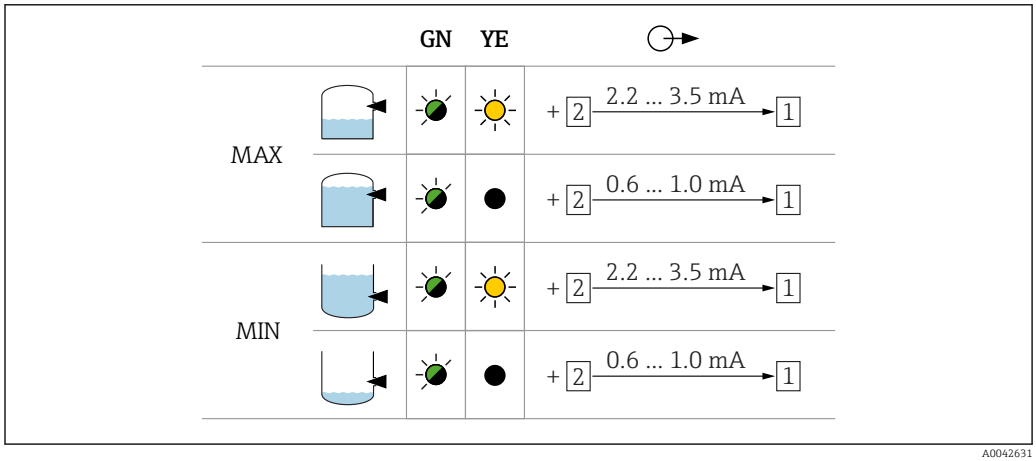

Signal on alarm

Output signal in the event of damage to the sensor: < 1.0 mA

Connectable load

- The technical data of the connected isolating amplifier as per IEC 60947-5-6 (NAMUR).
- Connection also to isolating amplifiers which have special safety circuits I > 3.0 mA.

Certificates and approvals

Current certificates and approvals for the product are available at www.endress.com on the relevant product page:

1. Select the product using the filters and search field.
2. Open the product page.
3. Select **Downloads**.

Other certificates and approvals for the product are available under https://www.endress.com-> Downloads.

Ordering information

Detailed ordering information is available from your nearest sales organization www.addresses.endress.com or in the Product Configurator at www.endress.com:

1. Select the product using the filters and search field.
2. Open the product page.
3. Select **Configuration**.

Product Configurator - the tool for individual product configuration
- Up-to-the-minute configuration data
- Depending on the device: direct input of information specific to the measuring point, such as the measuring range or operating language
- Automatic verification of exclusion criteria
- Automatic creation of the order code and its breakdown in PDF or Excel output format
- Ability to order directly in the Endress+Hauser Online Shop

Accessories

Shortening kit for FTI52

Order number: 942901-0001

Protective cover

Protective cover for F13, F17 and F27 housing (without display)
order number: 71040497

Protective cover for F16 housing
order number: 71127760

Surge arresters

HAW562

- For supply lines: BA00302K.
- For signal lines: BA00303K.

HAW569

- For signal lines in field housing: BA00304K.
- For signal or supply lines in field housing: BA00305K.

Weld-in adapter

All available weld-in adapters are described in the document TI00426F.

The documentation is available in the Download section on Endress+Hauser web site:
www.endress.com

Documentation

For an overview of the scope of the associated Technical Documentation, refer to the following:
- *Device Viewer* (www.endress.com/deviceviewer): Enter the serial number from the nameplate
- *Endress+Hauser Operations app*: Enter serial number from nameplate or scan matrix code on nameplate.

Document function

The following documentation may be available depending on the version ordered:

Document type	Purpose and content of the document
Technical Information (TI)	**Planning aid for your device** The document contains all the technical data on the device and provides an overview of the accessories and other products that can be ordered for the device.
Brief Operating Instructions (KA)	**Guide that takes you quickly to the 1st measured value** The Brief Operating Instructions contain all the essential information from incoming acceptance to initial commissioning.
Operating Instructions (BA)	**Your reference document** The Operating Instructions contain all the information that is required in the various phases of the life cycle of the device: from product identification, incoming acceptance and storage, to mounting, connection, operation and commissioning through to troubleshooting, maintenance and disposal.
Description of Device Parameters (GP)	**Reference for your parameters** The document provides a detailed explanation of each individual parameter. The description is aimed at those who work with the device over the entire life cycle and perform specific configurations.
Safety Instructions (XA)	Depending on the approval, safety instructions for electrical equipment in hazardous areas are also supplied with the device. The Safety Instructions are an integral part of the Operating Instructions. Information on the Safety Instructions (XA) relevant to the device is provided on the nameplate.
Supplementary device-dependent documentation (SD/FY)	Always comply strictly with the instructions in the relevant supplementary documentation. The supplementary documentation is an integral part of the device documentation.



www.addresses.endress.com

Endress+Hauser

People for Process Automation