Level Pressure Flow Temperature Liquid Analysis Registration Systems Components Services Solutions

Operating instructions

iTEMP® RTD TMT127
iTEMP® TC TMT128

Temperature DIN rail transmitter

RTD TC

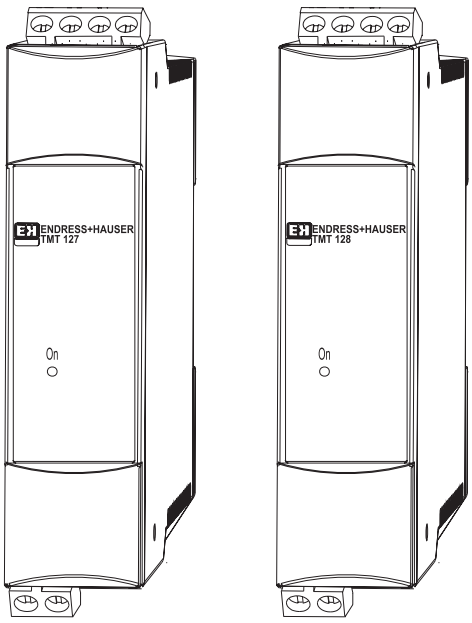

TMT127 TMT128

BA157R/24/ae/08.06

Endress+Hauser

People for Process Automation

Safety message

Instructions and procedures in the operating instructions may require special precau-tions to ensure the safety of the personnel performing the operations. Information that potentially raises safety issues is indicated by safety pictograms and symbols. Please refer to the safety messages before performing an operation preceded by pictograms and symbols, see chapter 1.5.
Though the information provided herein is believed to be accurate, be advised that the information contained herein is NOT a guarantee of satisfactory results. Specifically, this information is neither a warranty nor guarantee, expressed or implied, regarding performance; merchantability, fitness, or other matter with respect to the products; and recommendation for the use of the product / process information in conflict with any patent. Please note that the manufacturer reserves the right to change and / or improve the product design and specifications without notice.



Warning!
Failure to follow these installation guidelines could result in death or serious injury.
– Make sure only qualified personnel perform the installation.

Explosions could result in death or serious injury.

– Do not remove the connection head cover in explosive atmospheres when the circuit is live.
– Verify that the operating atmosphere of the transmitter is consistent with the appro-priate hazardous locations certifications.
– All connection head covers must be fully engaged to meet explosion-proof require-ments.

Process leaks could result in death or serious injury.

– Do not remove the thermowell while in operation.
– Install and tighten thermowells and sensors before applying pressure.

Electrical shock could cause death or serious injury.

– Use extreme caution when making contact with the leads and terminals.

Brief overview

Using the following short form instructions you can commission your system easily and swiftly:

Safety notes	Page 4
▼	
Installation	Page 7
▼	
Wiring	Page 9

Table of contents

1 Safety notes 4

1.1 Designated use 4
1.2 Installation, commissioning and operation 4
1.3 Operational safety 5
1.4 Returns 5
1.5 Safety pictograms and symbols 5

2 Identification 6

2.1 Unit identification 6

3 Installation 7

3.1 Installation conditions 7
3.2 Installation 8

4 Wiring 10

4.1 Overview 10
4.2 Measurement unit connection 10
4.3 Ground the Transmitter 10

5 Operation 11

6 Commissioning. 11

6.1 Installation and function check 11
6.2 Switch on the device 11

7 Maintenance. 11

8 Trouble-shooting 12

8.1 Trouble-shooting instructions 12
8.2 Application errors for RTD connection 12
8.3 Application errors for TC connection 12
8.4 Returns 13
8.5 Disposal 13

9 Technical Data 14

9.1 Function and system design 14
9.2 Input 14
9.3 Output 15
9.4 Power supply 16
9.5 Performance characteristics 16
9.6 Installation conditions 17
9.7 Environmental conditions 17
9.8 Mechanical construction 18
9.9 Human interface 18
9.10 Certificates and approvals 18

Index 20

1 Safety notes

Safe and secure operation of the DIN rail transmitter can only be guaranteed if the operating instructions and all safety notes are read, understood and followed.

1.1 Designated use

- The units are fixed range transmitters for specific sensors (TMT127 for Pt100 and TMT128 for thermocouples B, E, J, K, N, R, S, T, C, D, L, U). The unit is constructed for mounting on a DIN rail.
- The manufacturer cannot be held responsible for damage caused by misuse of the unit.
- Separate Ex documentation is part of this operating manual, for measurement systems in hazardous areas. The installation conditions and connection values indicated in these instructions must be followed!

1.2 Installation, commissioning and operation

The unit is constructed using the most up-to-date production equipment and complies with the safety requirements of the local guidelines. The temperature transmitter is fully factory tested according to the specifications indicated on the order. However, if it is installed incorrectly or is misused, certain application dangers can occur. Installation and wiring of the unit must only be done by trained, skilled personnel who are authorized to do so by the plant operator. This skilled staff must have read and understood these instructions and must follow them to the letter. The plant operator must make sure that the measurement system has been correctly wired to the connection schematics.

Electrical temperature sensors such as RTD's or thermocouples produce low-level signals proportional to their sensed temperature. The temperature transmitter converts the low-level sensor signal to a standard 4 to 20 mA DC signal that is relatively insensitive to lead length and electrical noise. This current signal is then transmitted to the control room via two wires.

The transmitter needs to be commissioned before installation in a hazardous area. Make sure the instruments in the loop are installed in accordance with intrinsically safe or non-incendive field wiring practices before connecting in an explosive atmosphere.

The transmitter electronics module is permanently sealed within the housing, resisting moisture and corrosive damage. Verify that the operating atmosphere of the transmitter is consistent with the appropriate hazardous locations certifications.



Warning!
Electrical shock could cause death or serious injury. If the sensor is installed in a high voltage environment and a fault or installation error occurs, high voltage may be present on the transmitter leads and terminals.

1.3 Operational safety

Hazardous areas
When installing the unit in a hazardous area, the national safety requirements must be met. Make sure that all personnel are trained in these areas. Strict compliance with installation instructions and ratings as stated in this documentation is mandatory.
The measuring device complies with the general safety requirements in accordance with IEC61010, the EMC requirements of IEC61326 and NAMUR recommendation NE21 and NE43.

Technical advancement
The manufacturer reserves the right to modify technical data without prior notice. Your distributor can supply you with current information and updates to these Operating Instructions.

1.4 Returns

Please follow the Return Authorization Policy which is attached with this manual. Due to its construction, the transmitter cannot be repaired. When disposing of the transmitter, please take note of the local disposal regulations.

1.5 Safety pictograms and symbols

Safe and reliable operation of this unit can only be guaranteed if the safety notes and warnings in these operating instructions are followed. The safety notes in these instructions are highlighted using the following symbols.



Note!
This icon indicates activities and actions that, if not followed correctly, could have an indirect influence on the unit operation or could lead to an unforeseen unit reaction.



Caution!
This icon indicates activities and actions that, if not followed correctly, could lead to faulty device operation or even damage to the unit.



Warning!
This icon indicates activities and actions that, if not followed correctly, could lead to personal injury, a safety risk or even total damage to the unit.





Explosion protected, type examined operating equipment!
If one of these icons is on the device's nameplate, the device can be used in hazardous areas.



Hazardous area!
This symbol identifies the hazardous area in the diagrams in these Operating Instructions.

– Devices that are used in hazardous areas or cables for such devices must have the corresponding type of protection.



Safe area (non-hazardous areas)!
This symbol identifies the non-hazardous area in the diagrams in these Operating Instructions.

– Devices in non-hazardous areas must also be certified if connection cables run through a hazardous area.

2 Identification

2.1 Unit identification

2.1.1 Legend plate

Compare the legend plates on the DIN rail transmitter with the following figures:

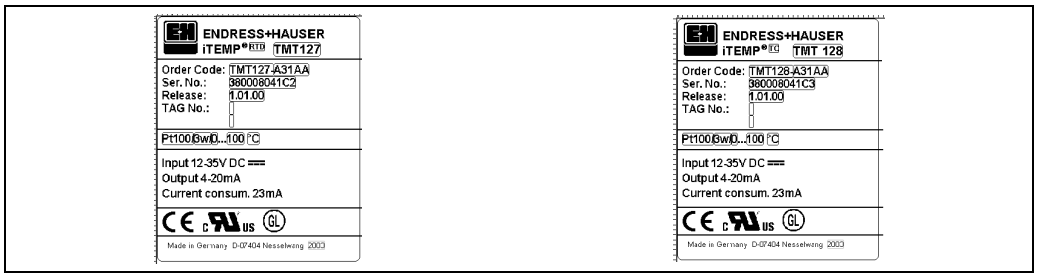

Fig. 1: Example: DIN rail transmitter legend plate

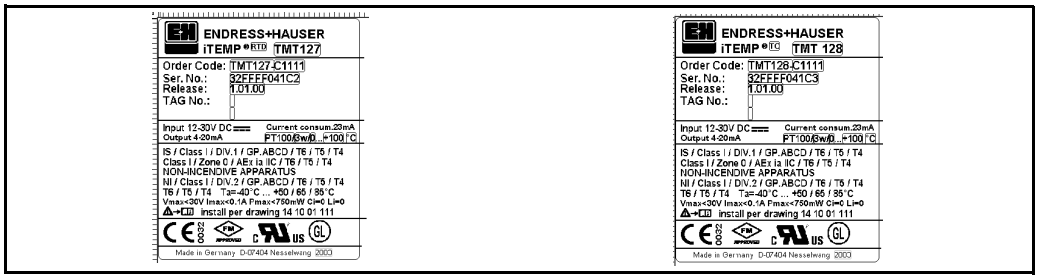

Fig. 2: Identification for hazardous area use (example, only on FM certified units)

CE Mark, declaration of conformity CE

The devices are designed to meet state-of-the-art safety requirements, have been tested, and left the factory in a condition in which they are safe to operate. The devices comply with the applicable standards and regulations in accordance with IEC 61010 "Protection Measures for Electrical Equipment for Measurement, Control, Regulation and Laboratory Procedures" and with the EMC requirements of IEC 61326.The measuring system described in these Operating Instructions thus complies with the statutory requirements of the EC Directives. The manufacturer confirms successful testing of the device by affixing to it the CE mark.

UL recognized component to UL 3111-1 c UL us

CSA GP approved

GL German Lloyd marine approval GL

GL Type Approval for temperature measurements in hazardous locations on GL Classed Vessels, Marine and Offshore Installations.

3 Installation

3.1 Installation conditions

Caution!
The unit must only be powered by a power supply that operates using an IEC 61010-1 compliant energy limited circuit: 'SELV or Class 2 circuit'.

- When installing and operating the unit, please take note of the allowable ambient temperature (see chapter 9 "Technical Data").
- When using the unit in a hazardous area, the limits indicated in the certification must be adhered to (see control drawing).

3.1.1 Dimensions

The DIN rail transmitter dimensions can be found in chapter "Technical data".

3.1.2 Installation point

Installation on DIN rail according to IEC 60715, e.g. in control panel.

3.1.3 Installation angle

There are no limits as to the angle of installation.

3.2 Installation

3.2.1 Typical North American installation

For installation, proceed as follows:

- Attach the TMT127/128 transmitter to a suitable rail or panel.
- Attach thermowell (1) to pipe or process container wall. Install and tighten the thermowell before applying process pressure.
- Attach necessary extension nipples and adapters (3) to the thermowell (1). Seal the nipple and adapter threads with silicone tape.
- Screw the sensor (2) into the thermowell (1). Install drain seals if required for harsh environments or to satisfy code requirements.
- Screw the connection head (4) to the sensor assembly.
- Attach the sensor lead wires to the connection head terminals.
- Connect sensor wires from the terminals inside the head to the TMT127/128 transmitter (5).

Install and tighten the connection head cover. Enclosure covers must be completely engaged to meet explosion-proof area requirements.

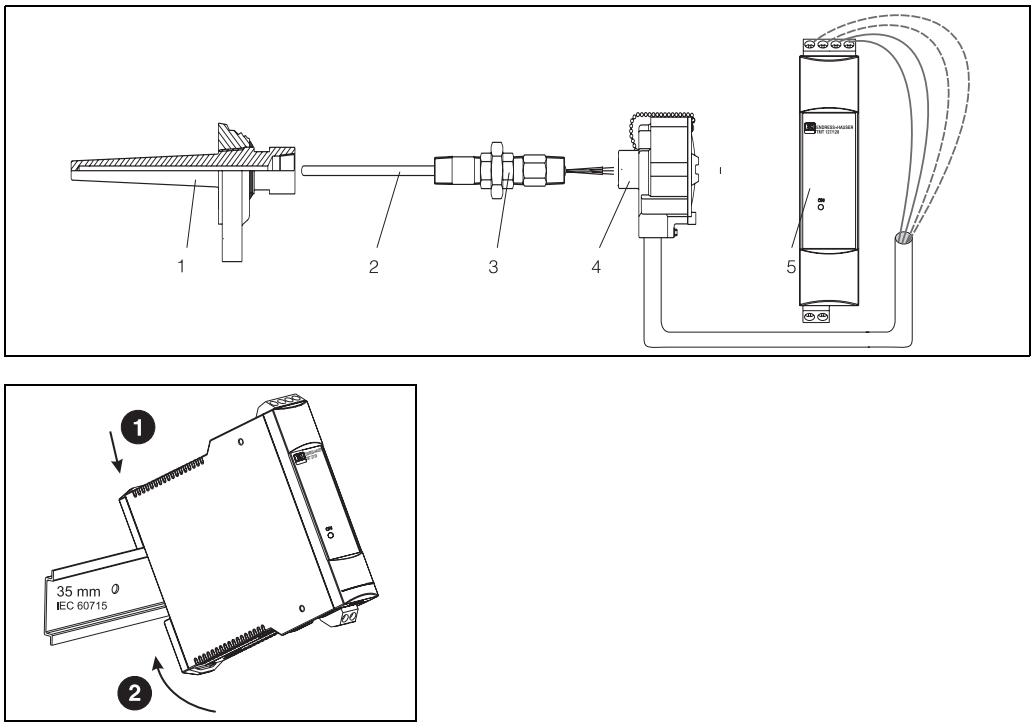

Fig. 3: Installation of DIN rail TMT127/128 transmitter.

1 Thermowell
2 Sensor
3 Extension nipples and adapters
4 Connection head
5 Temperature transmitter

3.2.2 Typical European installation

For installation, proceed as follows:

- Attach the TMT127/128 transmitter to a suitable rail or panel.
- Attach thermowell to pipe or process container wall. Install and tighten the thermowell before applying any pressure.
- Attach and connect appropriate lengths of sensor lead wire from the connection head to the sensor terminal block.
- Tighten the connection head cover. Enclosure covers must be completely engaged in order to meet explosion-proof area requirements.
- Run the sensor lead wires from the sensor assembly to the TMT127/128 transmitter.
- Attach the sensor wires to the TMT127/128 transmitter.

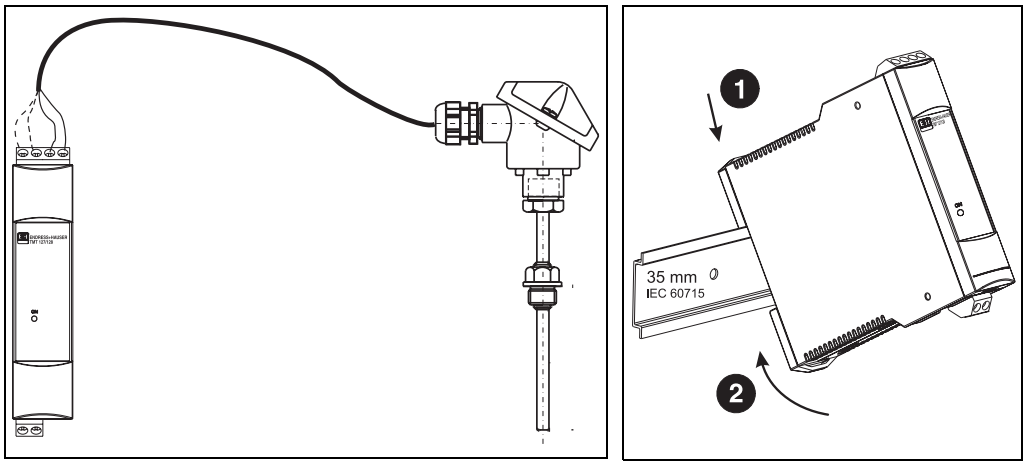

Fig. 4: Installing the TMT127/128 DIN rail transmitter

4 Wiring

4.1 Overview

Terminal layout

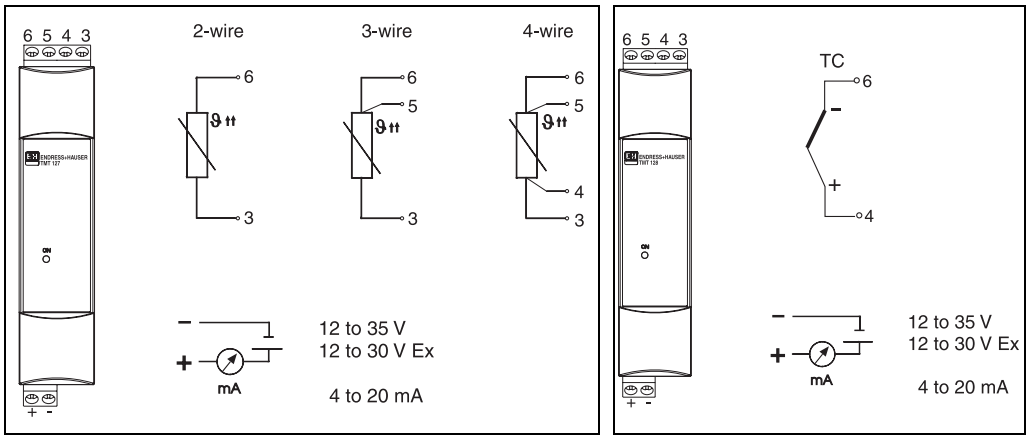

Fig. 5: DIN rail transmitter wiring

Left hand side: TMT127 – right hand side: TMT128

4.2 Measurement unit connection

Caution!

- Switch off power supply before opening the housing cover. Do not install or connect the unit to power supply. If this is not followed, parts of the electronic circuit will be damaged.
- If the device has not been grounded as a result of the housing being installed, we recommend grounding it via one of the ground screws.
- **Sensors:**
  Connect the sensor cables to the respective DIN rail transmitter terminals (Terminals 3 to 6) by following the wiring diagram .
- **Output signal and power supply:**
  Connect the cable wires from the power supply to terminal 1 and 2 according to the wiring diagram. For convenient installation, the connection is designed as a removable plug, so the connection can be made on the terminals, then plug in the connection socket to the transmitter housing.

Note!
The screws on the terminals must be screwed in tightly.

4.3 Ground the Transmitter

The transmitter will operate with the current signal loop either floating or grounded. However, the extra noise in floating systems affects many types of readout devices. If the signal appears noisy or erratic, grounding the current signal loop at a single point may solve the problem. The best place to ground the loop is at the negative terminal of the power supply. Do not ground the current signal loop at more than one point. The transmitter is galvanically isolated to 2 kV AC (from the sensor input to the output), so the input circuit may also be grounded at any single point. When using a grounded thermocouple, the grounded junction serves as this point.

5 Operation

The DIN rail transmitter does not need any configuration. They are ready to install: fixed range transmitters.

6 Commissioning

6.1 Installation and function check

Installation check
Monitor all connections making sure they are tight. In order to guarantee fault-free operation, the terminal screws must be screwed tightly onto the connection cables.

Function check
Measuring the analog 4 to 20 mA output signal or following failure signals:

Measurement range undercut	linear fall to 3.8 mA
Measurement range excess	linear rise to 20.5 mA
Sensor break; sensor short circuit[1)]	≤ 3.6 mA or ≥ 21.0 mA

1) not for thermocouples

6.2 Switch on the device

Once the power supply has been connected, the DIN rail transmitter is operational.

7 Maintenance

The temperature DIN rail transmitter has no moving parts and requires minimal scheduled maintenance.

Sensor Checkout
To determine whether the sensor is at fault, replace it with another sensor or connect a test sensor locally at the transmitter to test remote sensor wiring. Select any standard, off-the-shelf sensor for use with a temperature DIN rail transmitter, or consult the factory for a replacement special sensor or transmitter combination.

8 Trouble-shooting

8.1 Trouble-shooting instructions

If faults occur after commissioning or during measurement, always start any fault finding sequence using the following checklists. The user is guided to the possible fault cause and its removal by question and answer.

8.2 Application errors for RTD connection

Pt100

Error	Cause	Action/cure
Fault current (≤ 3.6 mA or ≥ 21 mA)	Defective sensor	Check sensor
	Incorrect connection of RTD	Connect cables correctly to terminal schematic
	Incorrect connection of the 2-wire cable	Connect cables correctly to terminal schematic (polarity)
	No power supply on the 2-wire connection	Check current loop; the supply should be > 12 V
	Defective device	Replace device

Error	Cause	Action/cure
Measured value incorrect/ inaccurate	Faulty sensor installation	Install sensor correctly
	Heat conducted by sensor	Take note of sensor installation point
	Sensor connection (2-wire)	Check sensor connection

8.3 Application errors for TC connection

Error	Cause	Action/cure
Fault current (≤ 3.6 mA or ≥ 21 mA)	Incorrect connection of sensor	Connect cables correctly to terminal schematic (polarity)
	Defective sensor	Check sensor
	Incorrect 2-wire connection (current loop)	Connect the cables correctly (see connection diagram)
	No power supply on the 2-wire connection	Check current loop; the supply should be > 12 V
	Defective device	Replace device

Error	Cause	Action/cure
Measured value incorrect/ inaccurate	Faulty sensor installation	Install sensor correctly
	Heat conducted by sensor	Take note of sensor installation point
	Fault due to the thermo wire welded to the well (interference voltages incurred)	Please use a sensor in which the thermo wire is not welded

8.4 Returns

Please follow the Return Authorization Policy which is attached with this manual.

8.5 Disposal

Due to its construction, the DIN rail transmitter cannot be repaired. When disposing of the DIN rail transmitter please take note of the local disposal regulations.

9 Technical Data

9.1 Function and system design

9.1.1 Measuring principle

Electronic monitoring and conversion of input signals in industrial temperature measurement.

9.1.2 Measuring system

The iTEMP® RTD TMT127 DIN rail temperature transmitter is a 2-wire transmitter with an analog output, measuring input for Pt100 in 2, 3, or 4-wire connection.
The iTEMP® TC TMT128 DIN rail temperature transmitter is a 2-wire transmitter with analog output. It has measurement input for thermocouples (TC).

9.2 Input

9.2.1 Measured variable

Temperature

9.2.2 Measuring range

Depending on the application, different measuring ranges can be ordered (see 'Type of input').

9.2.3 Type of input

Input	Designation	Measuring range limits	Min. span
TMT127 Resistance thermometer (RTD)	Pt100 as per IEC 60751	-328 to 1562 °F (-200 to 850 °C)	18 °F (10 °C)
	■ Connection type: 2-, 3- or 4-wire connection ■ Sensor cable resistance max. 40 Ω per cable ■ Sensor current: ≤ 0.6 mA		
TMT128 Thermocouples (TC)	Type B (PtRh30-PtRh6)[1]	32 to 3308 °F (0 to +1820 °C)	900 °F (500 °C)
to NIST Monograph 175, IEC 584	Type E (NiCr-CuNi)	-454 to 1832 °F (-270 to +1000 °C)	90 °F (50 °C)
	Type J (Fe-CuNi)	-346 to 2192 °F (-210 to +1200 °C)	90 °F (50 °C)
	Type K (NiCr-Ni)	-454 to 2501 °F (-270 to +1372 °C)	90 °F (50 °C)
	Type N (NiCrSi-NiSi)	-454 to 2372 °F (-270 to +1300 °C)	90 °F (50 °C)
	Type R (PtRh13-Pt)	-58 to 3214 °F (-50 to +1768 °C)	900 °F (500 °C)
	Type S (PtRh10-Pt)	-58 to 3214 °F (-50 to +1768 °C)	900 °F (500 °C)
to ASTM E988	Type T (Cu-CuNi)	-454 to 752 °F (-270 to +400 °C)	90 °F (50 °C)
	Type C (W5Re-W26Re)	32 to 4208 °F (0 to +2320 °C)	900 °F (500 °C)
to DIN 43710	Type D (W3Re-W25Re)	32 to 4523 °F (0 to +2495 °C)	900 °F (500 °C)
	Type L (Fe-CuNi)	-328 to 1652 °F (-200 to +900 °C)	90 °F (50 °C)
	Type U (Cu-CuNi)	-328 to 1112 °F (-200 to +600 °C)	90 °F (50 °C)
	■ Internal cold junction (Pt100) ■ Accuracy of cold junction: ± 1.8 °F (1 °C) ■ Sensor current: 350 nA		

1) High measuring error increase for temperature lower than 572 °F (300 °C)

9.3 Output

9.3.1 Output signal

Analog 4 to 20 mA

9.3.2 Breakdown information

Breakdown information to NAMUR NE43
Breakdown information is created when the measuring information is invalid or not present anymore and gives a complete listing of all errors occuring in the measuring system.

		Signal (mA)
Under ranging	Standard	3.8
Over ranging	Standard	20.5
Sensor break; sensor short circuit	To NAMUR NE43	≥ 21.0

9.3.3 Source impedance

max. ($V_{Power\ supply}$ - 12V) / 0.023 A (current output)
e.g. (24 V - 12V)/0.022 A = 521.74 Ω

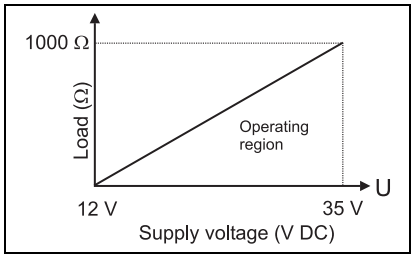

9.3.4 Transmission behavior

Temperature linear

9.3.5 Galvanic isolation

U = 2 kV AC (input/output)

9.3.6 Min. current consumption

≤ 3.5 mA

9.3.7 Current limit

≤ 23 mA

9.3.8 Switch on delay

4 s (during power up I_a = 3.8 mA)

9.3.9 Response time

1 s

9.4 Power supply

9.4.1 Electrical connection

See 'Terminal layout' in Chapter 'Wiring'.

9.4.2 Supply voltage

U_b = 12 to 35 V, reverse polarity protection

9.4.3 Residual ripple

Allowable ripple $U_{ss} \leq 3$ V at $U_b \geq 15$ V, $f_{max.} = 1$ kHz

9.5 Performance characteristics

9.5.1 Reference operating conditions

Calibration temperature: 77 °F ± 9 °F (+25 °C ± 5 °C)

9.5.2 Maximum measured error

	Type	Measurement accuracy[1)]
TMT127 Resistance thermometer RTD	Pt100	0.36 °F (0.2 °C) or 0.08%
TMT128 Thermocouple TC	K, J, T, E, L, U N, C, D S, B, R	typ. 0.9 °F (0.5 °C) or 0.08% typ. 1.8 °F (1.0 °C) or 0.08% typ. 3.6 °F (2.0 °C) or 0.08%

1) % refer to the set span. The highest value is valid.

9.5.3 Influence of supply voltage

- ≤ ±0.01%/V deviation from 24 V
  Percentages refer to the full scale value.

9.5.4 Influence of ambient temperature (Temperature drift)

- TMT127: Resistance thermometer (Pt100):
  T_d= ±(8.3 ppm/°F * (range end value + 328) + 27.8 ppm/°F * preset meas. range) * $\Delta\vartheta$
- TMT128: Thermocouple (TC):
  T_d= ±(27.8 ppm/°F * max. meas. range + 27.8 ppm/°F * preset meas. range) * $\Delta\vartheta$

  $\Delta\vartheta$ = Deviation of the ambient temperature according to the reference operating condition (77 °F ± 9 °F).

9.5.5 Influence of load

- ± 0.02%/100 Ω
  Percentages refer to the full scale value

9.5.6 Long-term stability

- ≤ 0.18 °F/year (0.1 °C/year) or ≤ 0.05%/year
  Values under reference operating conditions. % refer to the set span. The highest value is valid.

9.6 Installation conditions

9.6.1 Installation conditions

Installation angle: no limit

9.7 Environmental conditions

9.7.1 Ambient temperature limits

-40 to 185 °F (-40 to +85 °C) for Ex-area, see Ex-certification or control drawing

9.7.2 Storage temperature

-40 to 212 °F (-40 to +100 °C)

9.7.3 Climate class

as per IEC 60654-1, class C

9.7.4 Condensation

allowed

9.7.5 Degree of protection

NEMA 1 (IP 20)

9.7.6 Shock and vibration resistance

4g / 2 to 150 Hz as per IEC 60 068-2-6

9.7.7 Electromagnetic compatibility (EMC)

CE Electromagnetic Compatibility Compliance
The device meets all requirements listed under IEC 61326 Amendment 1, 1998 and NAMUR NE21

This recommendation is a uniform and practical way of determining whether the devices used in laboratory and process control are immune to interference with an objective to increase its functional safety.

Discharge of static electricity	IEC 61000-4-2	6 kV cont., 8 kV air	
Electromagnetic fields	IEC 61000-4-3	80 to 1000 Hz	10 V/m
Burst (signal)	IEC 61000-4-4	2 kV	
Transient voltage	IEC 61000-4-5	1 kV unsym. / 0.5 kV sym.	
HF coupling	IEC 61000-4-6	0.15 to 80 MHz	10 V

9.8 Mechanical construction

9.8.1 Design, dimensions

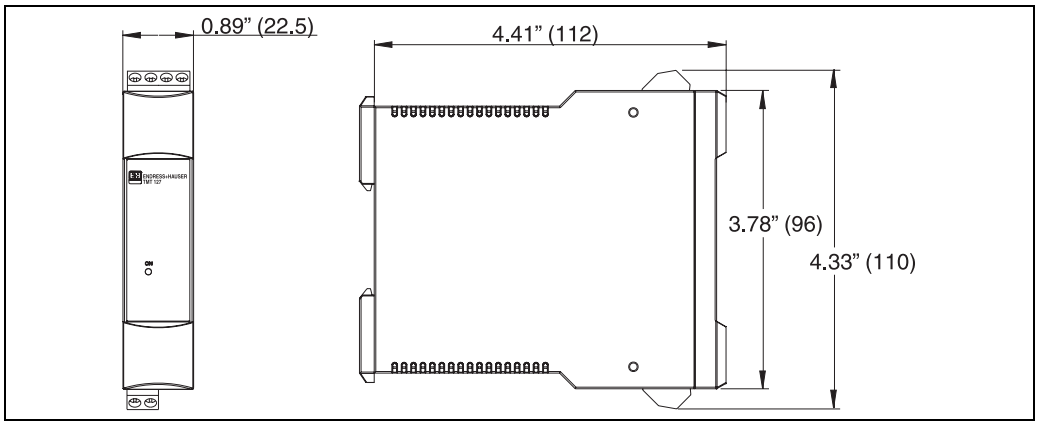

Fig. 6: Dimensions of the DIN rail transmitter in inches (mm)

9.8.2 Weight

approx. 3.2 oz (90 g)

9.8.3 Material

- Housing:
  Plastic PC / ABS, UL 94V0

9.8.4 Terminals

Keyed plug-in screw terminals, core size max. 16 AWG solid, or strands with ferrules

9.9 Human interface

9.9.1 Display elements

Illuminated yellow LED (0.08 in, 2 mm) signals device operation.

9.10 Certificates and approvals

9.10.1 CE-Mark

The measurement system fulfills the requirements demanded by the EU regulations. Endress+Hauser acknowledges successful unit testing by adding the CE mark.

9.10.2 Hazardous area approvals

- FM IS, Class I, Div. 1+2, Group A, B, C, D
- CSA IS, Class I, Div. 1+2, Group A, B, C, D
- ATEX II 2(1)G EEx ia IIC T4/T5/T6
- ATEX II 3G EEx nA IIC T4/T5/T6

9.10.3 UL

Recognized component to UL 3111-1

9.10.4 CSA GP

CSA General Purpose approved

9.10.5 GL

Ship building approval (Germanischer Lloyd)

9.10.6 Other standards and guidelines

- IEC 60529:
  Degrees of protection by housing (IP-Code)
- IEC 61010:
  Safety requirements for electrical measurement, control and laboratory instrumentation
- IEC 61326:
  Electromagnetic compatibility (EMC requirements)
- NAMUR
  Standardization association for measurement and control in chemical and pharmaceutical industries. (www.namur.de)
- NEMA
  Standardization association for the electrical industry

Index

B
Brief overview 2

C
CE mark 6
CSA GP 6

D
Dimensions 7

F
Fault checklists 12
Function check
  Measurement range excess 11
  Measurement range undercut 11
  Sensor short circuit 11

G
GL approval 6

H
Hazardous areas 5

I
Installation angle 7
Installation check 11
Installation point
  Form B Sensor connection head 7

L
Legend plate 6

M
Measurement unit connection
  Output signal and power supply 10
  Sensors 10

R
Returns 13

S
Safety message 2
Sensor Checkout 11

T
Technical advancement 5
Terminal layout 10

U
UL recognized component 6

United States

Endress+Hauser, Inc.
2350 Endress Place
Greenwood, IN 46143
Tel: 317-535-7138
Sales: 888-ENDRESS
Service: 800-642-8737
FAX: 317-535-8498
inquiry@us.endress.com
www.us.endress.com

Canada

Endress+Hauser Canada
1075 Sutton Drive
Burlington, ON L7L 5Z8
Tel: 905-681-9292
800-668-3199
FAX: 905-681-9444
www.ca.endress.com

Mexico

Endress+Hauser (Mexico) S.A. de C.V.
Av. Gustavo Baz No. 43
Fracc. Bosques de Echegaray
Naucalpan de Juárez, C.P. 53310,
Estado de Mexico
Mexico
Tel: (52) 55 5371 1110
FAX: (52) 55 5371 1128
E-mail: eh.mexico@mx.endress.com

Endress+Hauser

People for Process Automation

BA157R/24/ae/08.06
FM+SGML6.0