TI01689F/09/EN/03.26-00
71773404
2026-06-30

Technical Information
FlexView FMA90

Control unit



Control unit with color display and touch control for up to 2 ultrasonic, radar, hydrostatic or universal 4-20 mA/HART® level sensors

Applications

- Level measurement for level linearization and set point monitoring for alarm generation
- Level measurement with various pump control options for up to 8 pumps
- Differential level measurement for control calculations using two sensors
- Flow measurement in open channels or weirs, optionally with backflow detection
- Flow measurement with counting pulse output to external units and flow totalizers
- Flow measurement for storm water overflow tanks
- Digital communication via Ethernet-based fieldbuses (Industrial Ethernet) or HART for data transfer to a control system.

Advantages

- Simple operation and visualization via 3.5" color display and touch control or integrated web server
- Communication via Ethernet or wirelessly via WLAN
- Compatible with every two-wire or four-wire level transmitter with 4-20 mA/ HART interface
- Quick and easy commissioning thanks to guided wizards
- Automatic detection and configuration of the following Endress+Hauser sensors: Micropilot FMR20B, FMR30B, Prosonic FMU20B, FMU30B and Waterpilot FMX21
- International Gas-Ex and Dust-Ex approvals
- Available for universal use as field housing, DIN rail device or panel-mounted device

Endress+Hauser
People for Process Automation

Table of contents

Function and system design 3
Measuring principle 3
Application packages 4
Dependability 10

Input 12
Measured variable and measuring range of the sensor inputs 12
Digital inputs 12

Output 12
Analog output (current output) 12
Relay output 13
Switch output 14
Galvanic isolation 14

Power supply 15
Connection data (AC voltage) 15
Connection data (DC voltage) 15
Terminal assignment 15
Terminals 19
Cable entries 19
Cable specification 20

Performance characteristics 20
Reference operating conditions 20
Maximum measurement error 20
Response time 20
Real-time clock (RTC) 20

Mounting 20
Mounting location 20
Orientation 21
Installation instructions 21
Length of connecting cable 21
Connecting cable 21
Beam angle 21

Environment 21
Ambient temperature range 21
Storage temperature 21
Relative humidity 21
Operating height 21
Degree of protection 21
Electrical safety 22
Mechanical load 22
Cleaning 22
Electromagnetic compatibility (EMC) 22

Mechanical construction 23
Dimensions 23
Weight 24
Materials 25

Operability 25
Onsite operation and display 25
Elements on front of device with touch display 26
Light emitting diodes (LEDs) 26
Operation concept 26
Languages 27
Remote operation 27
System integration 28
Supported operating tools 28

Certificates and approvals 28

Ordering information 28
Scope of delivery 28

Accessories 28
Device-specific accessories 29
Service-specific accessories 30
Online tools 30
System components 30

Documentation 30

Function and system design

The device is designed for the water and wastewater industry for the evaluation of measured values and device status, as well as for the configuration of the following Endress+Hauser sensors:
- Radar time-of-flight method: Micropilot FMR10B [1], FMR20B, FMR30B
- Ultrasonic time-of-flight method: Prosonic FMU20B; FMU30B
- Hydrostatic level measurement: Waterpilot FMX11 [1], FMX21

Universal level sensors can also be connected to the 4 to 20 mA/HART inputs.

Typical measuring tasks
- Level measurement and linearization
- Flow measurement at open flumes and weirs
- Pump control
- Rake control

Measuring principle

The device receives a 4 to 20 mA signal from connected sensors and scales it to a level value.

Connected HART sensors provide a digital value with a unit that is scaled according to the application.

Level measurement using ultrasonic or radar sensor

The level sensor sends an electromagnetic wave or ultrasonic pulses in the direction of the surface of the medium. These are reflected there, and then received again by the level sensor. The sensor measures the time t between the transmission and reception of a pulse. The distance D between the sensor and the surface of the medium is calculated from this. The level L is derived from D. Schematic representation below; for details regarding the measuring principle, see the Operating Instructions of the connected sensor technology.

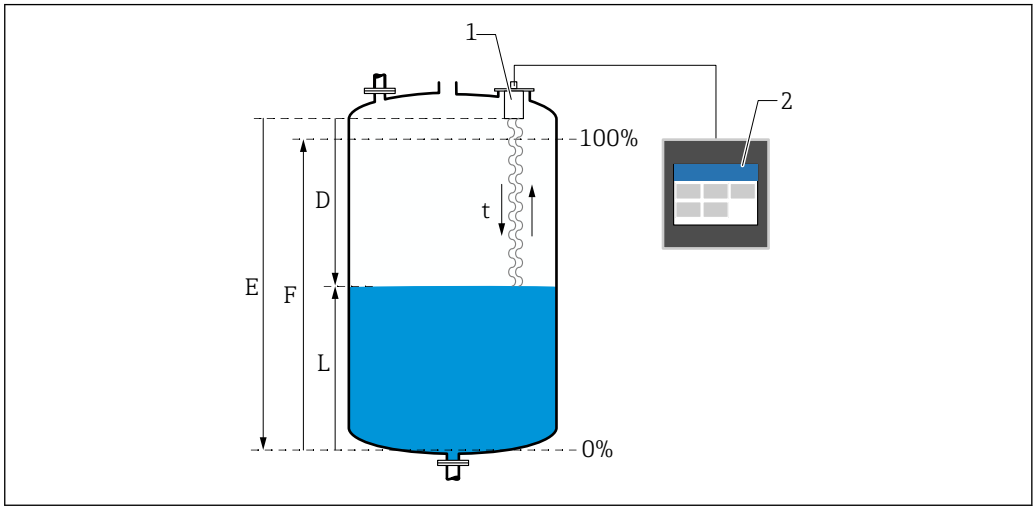

1 Configuration parameters for level measurement using an ultrasonic or radar sensor

1 Level sensor
2 FlexView FMA90
D Distance between sensor (reference point) and surface of medium
E Empty calibration (Empty)
F Full calibration (Full)
L Level

1) 4 to 20 mA only, configuration via HART not possible

Level measurement using the hydrostatic sensor

The ceramic measuring cell is a dry measuring cell, i.e. the pressure acts directly on the robust, ceramic process membrane of the Waterpilot. Changes in atmospheric pressure are guided via a pressure compensation tube through the supporting cable to the rear of the ceramic process membrane and are compensated for. A pressure-dependent change in capacitance, caused by the movement of the process membrane, is measured at the electrodes of the ceramic carrier. The sensor electronics will then convert this to a signal that is proportional to the pressure and linear to the level. At the field housing of the FlexView FMA90, the pressure compensation tube can be inserted directly. Pressure compensation relative to the environment is achieved via an integrated membrane.

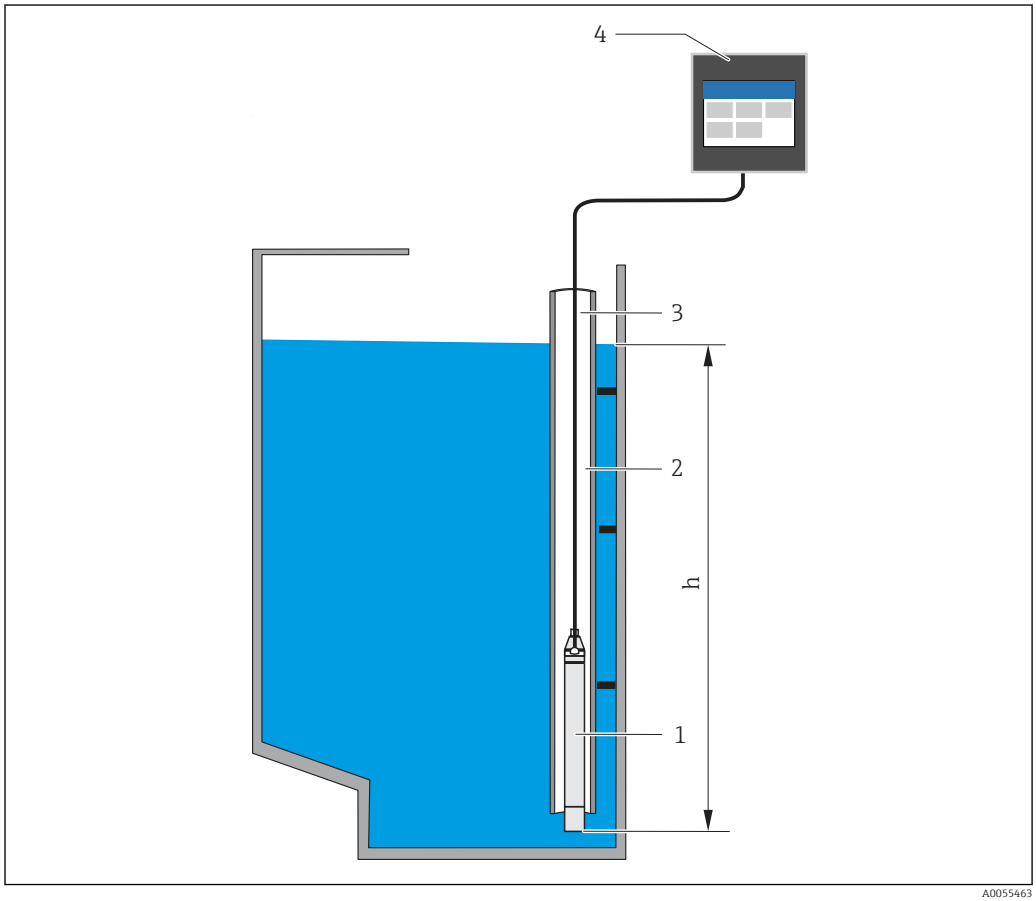

1 Pressure measuring cell (ceramic measuring cell)
2 Guide tube
3 Extension cable with pressure compensation tube
4 FlexView FMA90
h Level height

Application packages

The basic functions of the device are defined with the optional application packages in order code 030 (application package):

1: Universal (level, pump control, flow measurement, rake control)

Functions of the "Universal" application package

Application examples for level measurement

- Level measurement in containers and tanks using stored curves or free tables
- Alarm output
- Offsetting of both channels, e.g. for determining the mean value
- Rake control
- Pump control

Application examples for flow measurement
- Flow measurement in flumes or weirs using stored curves or free tables
- Offsetting of both channels
- Totalizer + pulses
- Backwater detection
- Storm water overflow tank

Application examples for level measurement

Level measurement and alarm output

The level is recorded with the sensor. Limit values can be used to define minimum and maximum values and switch relays accordingly. Linearization must be set to "on" for the level to be passed on.

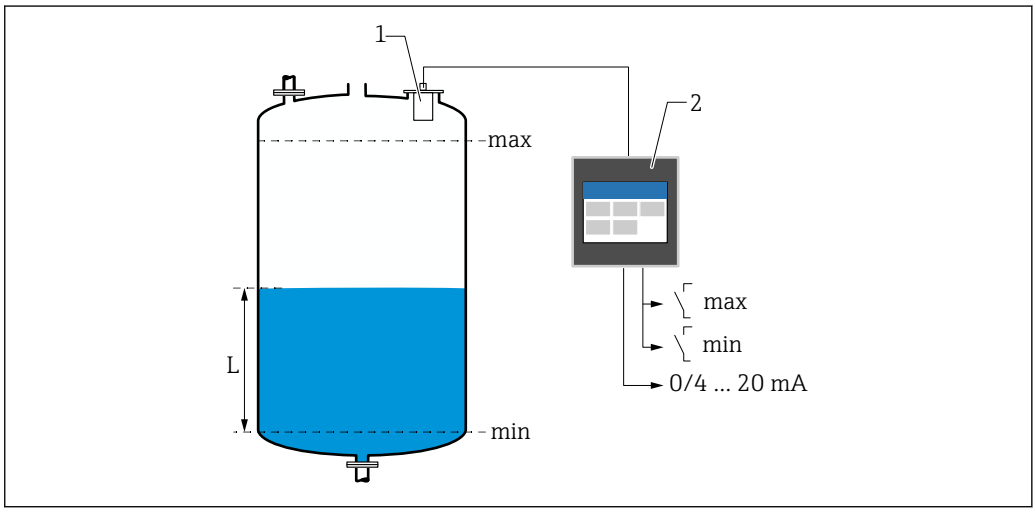

2 *Level measurement and alarm output*

1 Level sensor (e.g. radar or ultrasonic sensor)
2 FlexView FMA90
L Level

Level linearization

Pre-programmed linearization curves

- None (the sensor value is adopted directly)
- "Linear" cylindrical tank
- Horizontal cylindrical tank
- Spherical tank
- Tank with pyramid bottom
- Tank with conical bottom
- Tank with flat angled bottom

Linearization table

- Manual entry
- Up to 32 linearization points "Level - Volume". A linearization table can be created on the device or via the web server using editors. This table can be imported and exported as a CSV file (backup) in the web server.

Rake control (differential measurement)

Two sensors measure the levels before the rake (= upstream water level) and after the rake (= downstream water level). If the rake is dirty, the difference between the levels increases and the relays can be switched accordingly for rake control.

The rake control can operate in two modes: Difference: upstream water level – downstream water level or Ratio downstream water level / upstream water level

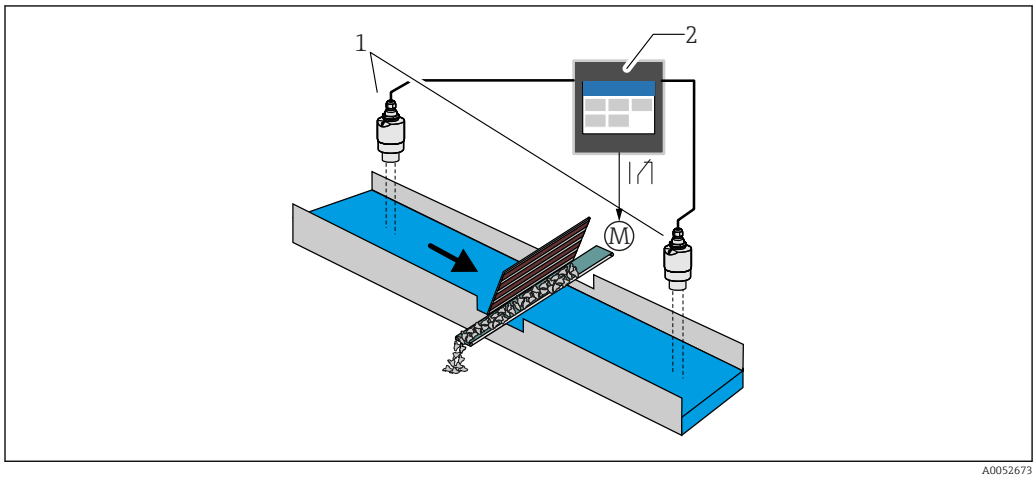

3 Rake control (differential measurement)

1 Level sensors (e.g. Radar or ultrasonic sensor). Left sensor: upstream water level; right sensor: downstream water level
2 FlexView FMA90
M Motor for rake control

Pump control

Via the pump control, up to eight pumps can be controlled individually or in groups based on the level, the status of digital inputs and/or the time. Additional functions for pump control are individually configurable. Each pump control can be operated in 2 modes: limit value control or pump rate control.

On 2-channel devices, two individual pump controls can be activated.

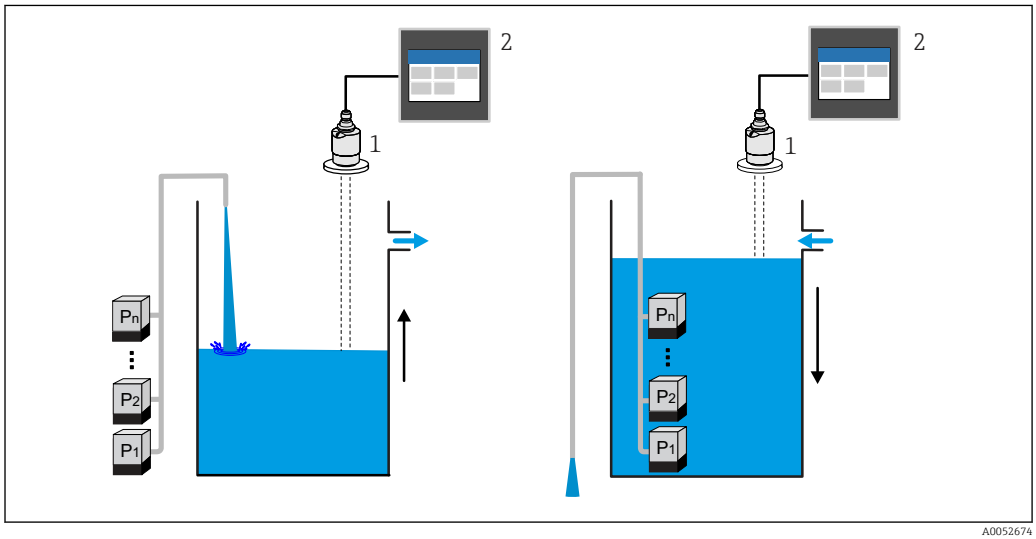

4 Pump control for up to eight pumps. Example on the left: Filling; on the right: Emptying

1 Level sensor (e.g. radar or ultrasonic sensor)
2 FlexView FMA90

Individually configurable for each pump:
- Pump switching delay
  E.g. to prevent overload of the power supply system.
- Pump run-on times and intervals
  E.g. for complete emptying of shafts or channels.
- Reduction of buildup on pump chamber walls by fine adjustment of the switch point
  E.g. variably changing level.

Further functions:
- Alternation in sequence/according to defined load.
  E.g. for protecting individual pumps, or pumps with the same load.
- Limit control
  Individual operation/parallel operation/pump group.
- Pump rate control
  Pumps are switched on automatically one by one until the minimum pump rate or switch-off point is reached.
- Tariff control
  Control of pumps according to electricity tariff.
- Storm function
  The storm function is used to prevent the unnecessary operation of the pumps if the plant is flooded for a short time (e.g. in the event of strong rainfall).
- Flush control
  The flushing function enables a relay to be switched on for a certain number of flush cycles for a specific flushing duration, e.g. to inject water into the container in order to dissolve/prevent sedimentation at the bottom of the container.
- Function test
  Pumps that have been switched off for too long are automatically switched on for a certain amount of time with the function test in order to avoid standing damage.
- Operating data recording
  Display of operating data such as operating hours since the last reset, total operating hours, number of starts since the last reset, starts per operating hour since the last reset, number of run-on starts since the last reset, runtime of the last switch-on (pump is off)/since switch-on (pump running), downtime (last downtime if pump on/since switch-off if pump off).
- Operating hours alarm
  E.g. alarm goes off if the operating hours of a pump are exceeded.
- Pump feedback
  E.g. for indicating the pump status using a digital input.

Application examples for flow measurement

Flow measurement at flumes or weirs

A level sensor measures the level at the inlet of a flume or weir. The corresponding flow is calculated using pre-programmed or freely selectable linearization curves. If a critical value is exceeded or fallen short of, an alarm can be generated or a relay can be switched.

On 2-channel devices, two individual flow measurements can be activated.

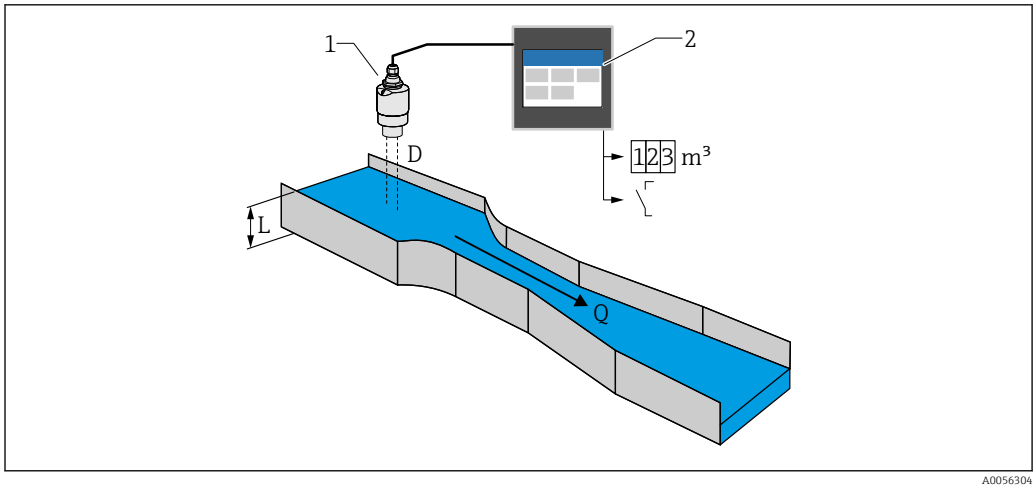

5 Flow measurement at flumes or weirs

1 Level sensor (e.g. radar or ultrasonic sensor)
2 FlexView FMA90
D Distance between sensor membrane (reference point) and surface of liquid
L Level
Q Flow

The level L is derived from D. With linearization, the flow Q is derived from L.

Flow linearization

Pre-programmed linearization curves

Pre-programmed open flumes:
- Khafagi-Venturi flume
- ISO Venturi flume
- Parshall flume
- Palmer-Bowlus flume
- Trapezoidal flume according to ISO 4359:2022
- Rectangular flume according to ISO 4359:2022
- Leopold-Lagco flume
- Cutthroat flume
- U-shaped flume according to ISO 4395:2022
- H-flume

Pre-programmed weirs:
- Trapezoidal weir
- Circular-crested horizontal weir according to ISO 4374:1990
- Broad-crested weir according to ISO 3846:2008
- Thin-walled rectangular weir according to ISO 1438:2017
- Thin-walled triangular weir according to ISO 1438:2017

The pre-programmed linearization curves are stored in the device.

Standard formula for flow measurement

$Q = C\ (h^{\alpha} + \gamma h^{\beta})$

- h: Upstream level
- α, β, γ, C: User-definable parameters

Other supported calculations

- Ratiometric calculation
- Pipe profile (Manning)
- Linearization table with 32 points A linearization table can be created on the device or via the web server using editors. This table can be imported and exported as a CSV file (backup) in the web server.

Backwater detection (differential measurement)

Two level sensors measure the level at the inlet and outlet of a flume or weir. If the "downstream level : upstream level" ratio exceeds a critical value, an alarm is generated.

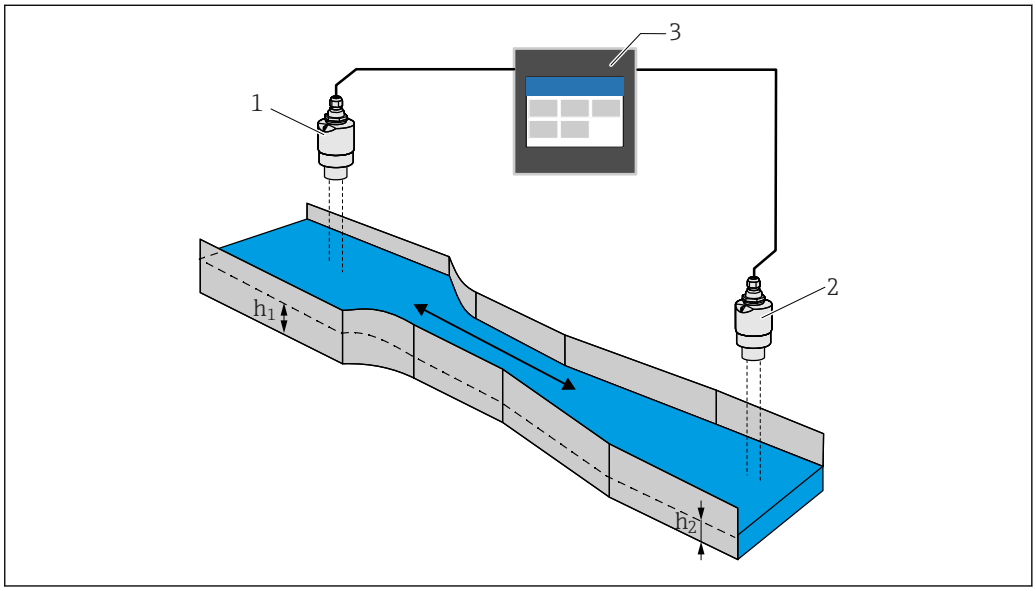

6 *Backwater detection*

1 Upstream sensor (e.g. radar or ultrasonic sensor)
h_1 Upstream level
2 Downstream sensor (e.g. radar or ultrasonic sensor)
h_2 Downstream level
3 FlexView FMA90

Stormwater overflow basin

A level sensor measures the level L. Using the integrated applications for the weirs, the overflow quantity Q can be calculated and stored in a totalizer. If a critical value is exceeded, an alarm can be generated or a relay can be switched.

Low flow cut off can be activated at the device, which sets the output value to 0 when a customer-specific flow value is fallen short of. This prevents downstream totalizers from further integrating the flow.

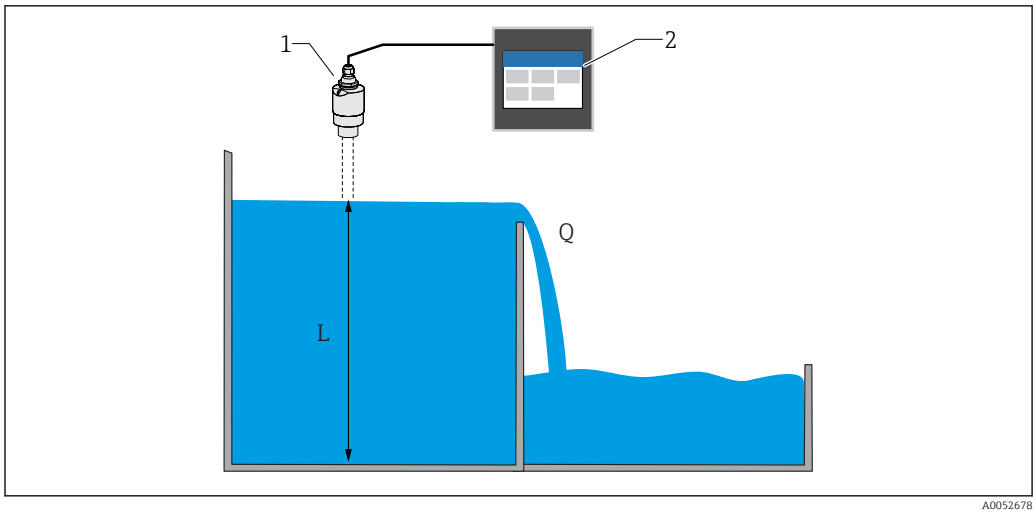

7 *Stormwater overflow basin*

1 Level sensor (e.g. radar or ultrasonic sensor)
2 FlexView FMA90
L Level
Q Overflow quantity

Totalizer + pulses (e.g. for samplers)

A level sensor measures the level at the inlet of a flume or weir. The corresponding flow is calculated using pre-programmed or freely selectable linearization curves. Using a pulse output (relay, open collector), the device can trigger additional systems such as wastewater samplers for example, with the flow-proportional volume signal.

Low flow cut off can be activated at the device, which sets the output value to 0 when a customer-specific flow value is fallen short of. This prevents downstream totalizers from further integrating the flow.

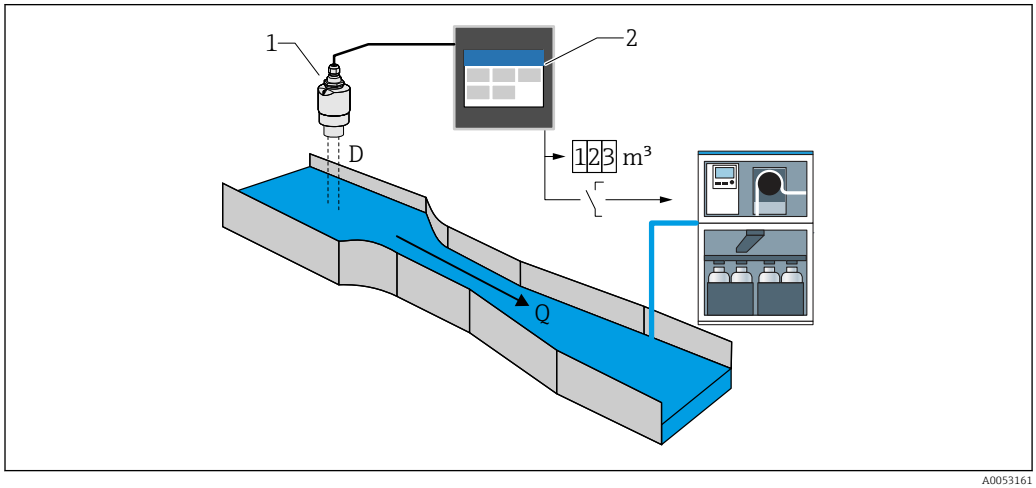

8 *"Totalizer + pulses" function, e.g. for samplers on flumes or weirs*

1 Level sensor (e.g. radar or ultrasonic sensor)
2 FlexView FMA90
D Distance between sensor membrane (reference point) and surface of liquid
Q Flow

Dependability

Safety

The polycarbonate field housing and DIN rail device can be protected against tampering by means of a seal. When installing in a control cabinet, the door must be secured with a lock.

IT security

The manufacturer warranty is valid only if the product is installed and used as described in the Operating Instructions. The product is equipped with security mechanisms to protect it against any inadvertent changes to the settings.

IT security measures, which provide additional protection for the product and associated data transfer, must be implemented by the operators themselves in line with their security standards.

Device-specific IT security

The device was developed in accordance with the requirements of the IEC 62443-4-1 "Secure product development lifecycle management" standard.

Link to the cybersecurity website: https://www.endress.com/cybersecurity

Further information on cybersecurity: see product-specific security manual (SD).

Input

Measured variable and measuring range of the sensor inputs

Number of sensor inputs

To be selected in order code 060 (sensor connection; analog output)

1x 4–20 mA/HART input; 1x 4–20 mA output

2x 4–20 mA/HART input; 2x 4–20 mA output

Connectable sensors

1. Connectable Endress+Hauser sensors with automatic sensor detection:
- Micropilot FMR20B, FMR30B
- Prosonic FMU20B, FMU30B
- Waterpilot FMX21

The most important sensor parameters are transmitted to the device via the HART interface and managed there. This makes it possible, for example, to replace the sensor quickly and easily.

2. Connectable Endress+Hauser 4 to 20 mA sensors:
- Micropilot FMR10B
- Waterpilot FMX11

3. Universal level sensors can also be connected to the 4 to 20 mA/HART inputs.

Sensor supply

Supply voltage (LPS): 14 to 27 V (load-dependent)

Input resistor current measurement: 25 Ω typ.

Internal HART communication resistor: 330 Ω typ.

Measurement accuracy

Basic accuracy: < 0.02 mA

Temperature drift: < 2 µA/K

Long-term drift: < 0.02 mA/year

Digital inputs

Number of digital inputs

4; to be selected in order code 080 (digital input; switch output)

Switching possibilities

External level switch (for safety functions such as overflow or dry-running protection)
- 0: ≤ 5 V
- 1: ≥ 11 V
- Maximum permitted voltage: 30 V

Possible applications

- Pump feedback
- Min/max level detection e.g. using Liquiphant

Output

Analog output (current output)

Quantity

To be selected in order code 060 (sensor connection; analog output)

1x 4–20 mA/HART input; 1x 4–20 mA output

2x 4–20 mA/HART input; 2x 4–20 mA output

Technical data for analog output

- Version: active current output
- Load: Max. 600 Ω
- Basic accuracy: < 0.02 mA
- Temperature drift: < 2 µA/K
- Long-term drift: < 0.02 mA/year

Output signal

Configurable:
- 4 to 20 mA with HART (optional)
- 0 to 20 mA without HART

Optional: The HART signal is superimposed on the first analog output.

The second analog output does not have a HART signal.

Response to errors

- For setting 4 to 20 mA, selectable:
  - MIN: 3.5 mA
  - MAX: Adjustable 21.5 to 22.5 mA
- For setting 0 to 20 mA:
  Adjustable 21.5 to 22.5 mA

Relay output

Quantity

To be selected in order code 070 (relay output)

Selection 1 relay: Version as SPDT [2)]

Selection 5 relay: 2xSPDT [2)], 3xSPST [3)];

Technical data for relay

- Version: Potential-free contact, can be inverted
- Switching capacity (DC voltage): 4 A at 30 V
- Switching capacity (AC voltage): 4 A, 250 V, 1 000 VA (AC1)
- Mechanical switching cycles (without load): > 10^6
- Mechanical switching cycles (under load): > 10^4

Assignable functions

The functions that can be assigned to a switch output or a relay are identical.

- Alarm:
  Switches as soon as "Alarm" type diagnostics are pending
- Switch output:
  Digital inputs
  Limit values
- Pump control application:
  Pumps
  Flush control
  Alarm feedback
  Alarm operating hours
- Rake control application:
  Switching the rake
- Flow measurement application:
  Backwater alarm
- Pulse output:
  Flow 1 or 2
  Calculated flows
- Time pulse output:
  Switching a pulse after an adjustable duration

2) "Single Pole, Double Throw" = relay with changeover contact
3) "Single Pole, Single Throw" = relay with normally-open contact

Switch output

Quantity

To be selected in order code 080 (digital inputs; switch outputs)

1 or 3 open collector outputs (NPN)

Technical data for switch output

- Max. switching current: 120 mA
- Max. voltage: 30 V
- Max. rate: 1000 pulses/second (at a load resistance ≤ 10 kΩ); adjustable pulse length
- Voltage drop when switched on (live): < 3 V

Assignable functions

The functions that can be assigned to a switch output or a relay are identical.

- Alarm:
  Switches as soon as "Alarm" type diagnostics are pending
- Switch output:
  Digital inputs
  Limit values
- Pump control application:
  Pumps
  Flush control
  Alarm feedback
  Alarm operating hours
- Rake control application:
  Switching the rake
- Flow measurement application:
  Backwater alarm
- Pulse output:
  Flow 1 or 2
  Calculated flows
- Time pulse output:
  Switching a pulse after an adjustable duration

Galvanic isolation

The following connections are galvanically isolated from one another:
- Power supply
- Sensor inputs
- Analog outputs
- Relay outputs
- Digital inputs (isolated from other connections but not from each other)
- Open collector outputs

Power supply

Connection data (AC voltage)

Device version

Order code 020 (power supply); option 1 (100-230 V AC)

- Supply voltage: 85 to 253 V_{AC} (50/60 Hz)
- Power consumption: Max. 20 VA

Connection data (DC voltage)

Device version

Order code 020 (power supply); option 2 (10.5-32 V DC)

- Supply voltage: 10.5 to 32 V_{DC}
- Power consumption: Max. 15 VA

⚠ CAUTION

- ▶ The device must be powered only by a power unit that operates using a limited-energy circuit in accordance with UL/EN/IEC 61010-1, Section 9.4 and the requirements in Table 18.
- ▶ Apart from the relays and the AC supply voltage, only energy-limited circuits according to IEC/EN 61010-1 may be connected.

Terminal assignment

Terminal areas of DIN rail device

Device version

Order code 040 (housing); option A (DIN rail mounting)

The DIN rail device is designed for installation in the optional aluminum field housing.

The DIN rail device is available with or without a display unit (optional). The electrical connection is the same.

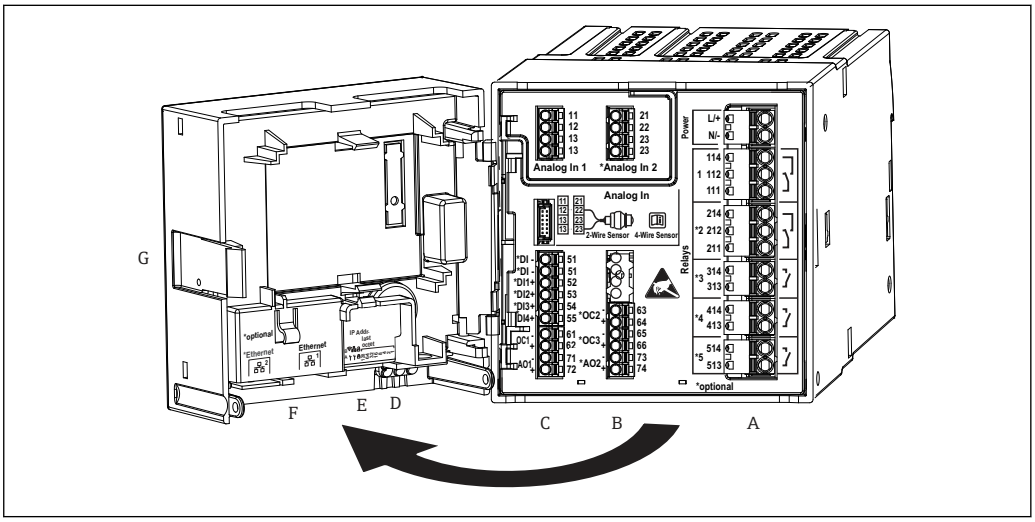

A0049209

9 *Terminals for DIN rail device; terminal design: attachable push-in terminals*

A Power unit with relay 1 (changeover contact). Optional: Relay 2 to 5
B I/O option card with analog input 2 (incl. loop power supply), analog output 2, open collector 2, 3
C Standard I/O card with analog input 1 (incl. loop power supply), analog output 1, open collector 1, optional: digital inputs 1 to 4
D 3 LEDs (only for version without display): DS (device status), NS (network status), WLAN
E DIP switch
F Ethernet connection 1 (standard), Ethernet connection 2 (optional)
G Unlocking device

The switching positions of the relays shown on the terminal area refer to the de-energized (current-free) state.

Terminal areas of panel-mounted device

Device version

Order code 040 (housing); option B (panel mounting)

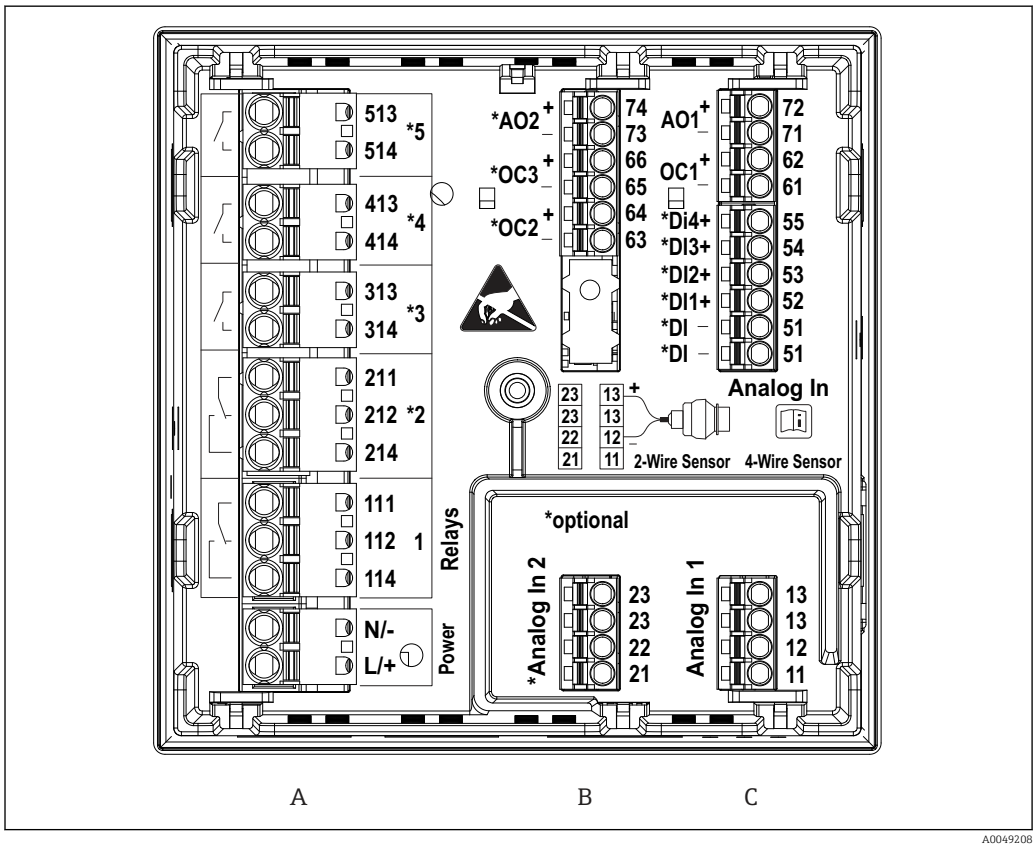

10 *Terminals for panel-mounted device (rear of device); terminal design: attachable push-in terminals*

A Power unit with relay 1 (changeover contact). Optional: Relay 2 to 5
B I/O option card with analog input 2 (incl. loop power supply), analog output 2, open collector 2, 3
C Standard I/O card with analog input 1 (incl. loop power supply), analog output 1, open collector 1, optional: digital inputs 1 to 4

The switching positions of the relays shown on the terminal area refer to the de-energized (current-free) state.

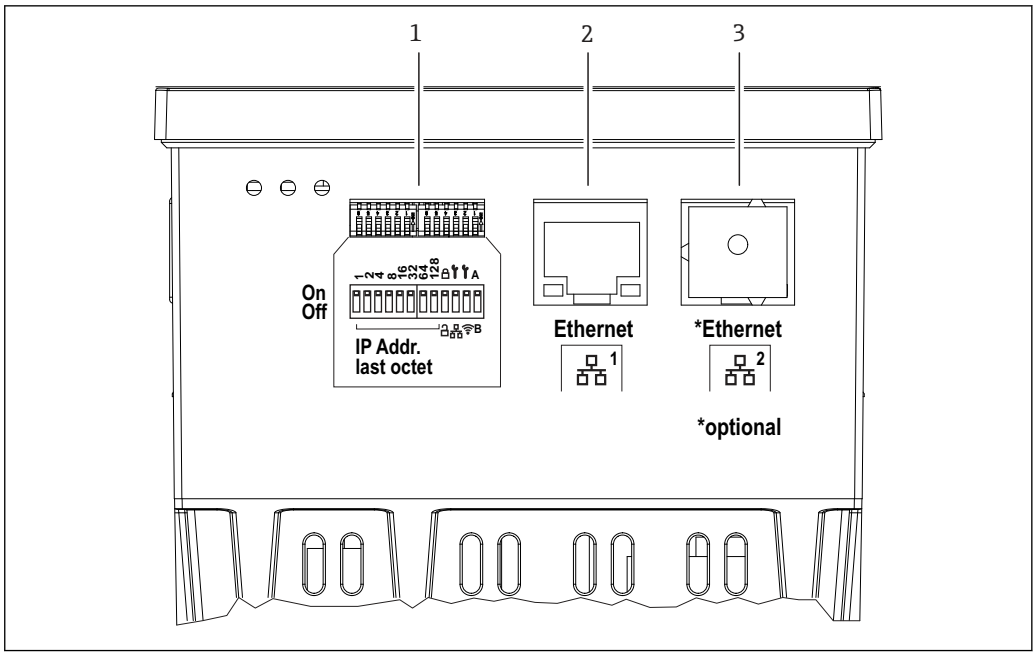

11 *Connections for panel-mounted device (underside of devices)*

1 DIP switch
2 Ethernet connection 1 (standard)
3 Ethernet connection 2 (optional)

Terminal areas of polycarbonate field housing

Device version

Order code 040 (housing); option C (field mounting, polycarbonate)

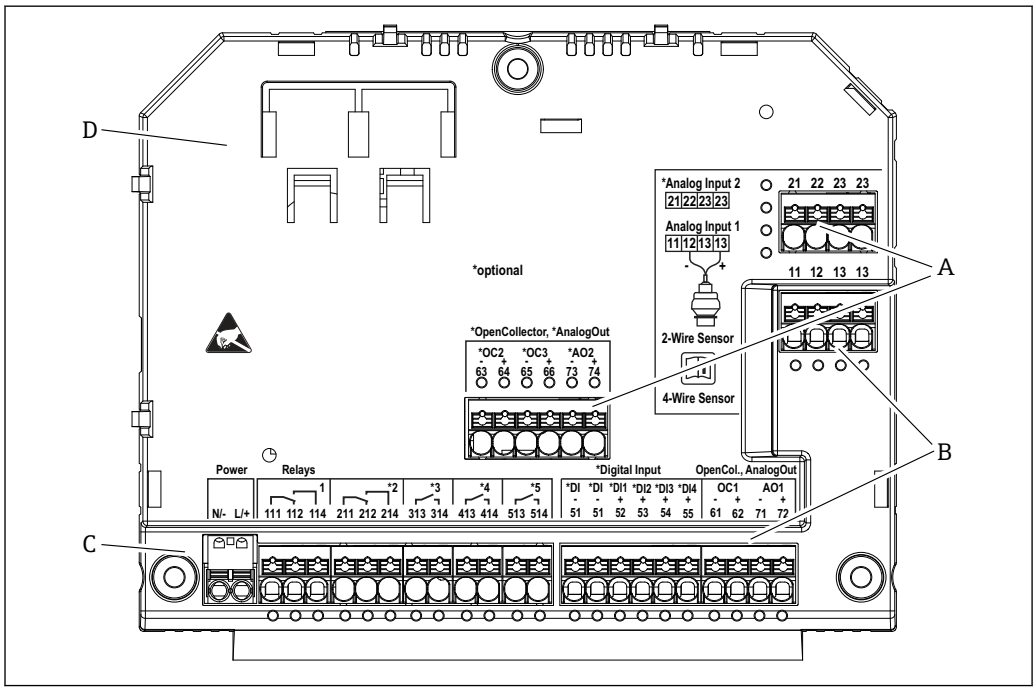

12 Terminals in terminal compartment of polycarbonate field housing; terminal design: push-in terminals

A Terminal area for analog input 2 (incl. loop power supply), analog output 2, open collector 2, 3
B Terminal area for analog input 1 (incl. loop power supply), analog output 1, open collector 1, optional: Digital inputs 1 to 4
C Terminal area for power supply and relay 1 (changeover contact). Optional: Relay 2 to 5
D Holder for commercially available shunting clamps

The switching positions of the relays shown on the terminal area refer to the de-energized (current-free) state.

Terminal areas on rear side of display for the polycarbonate field housing

Device version

Order code 040 (housing); option C (field mounting, polycarbonate)

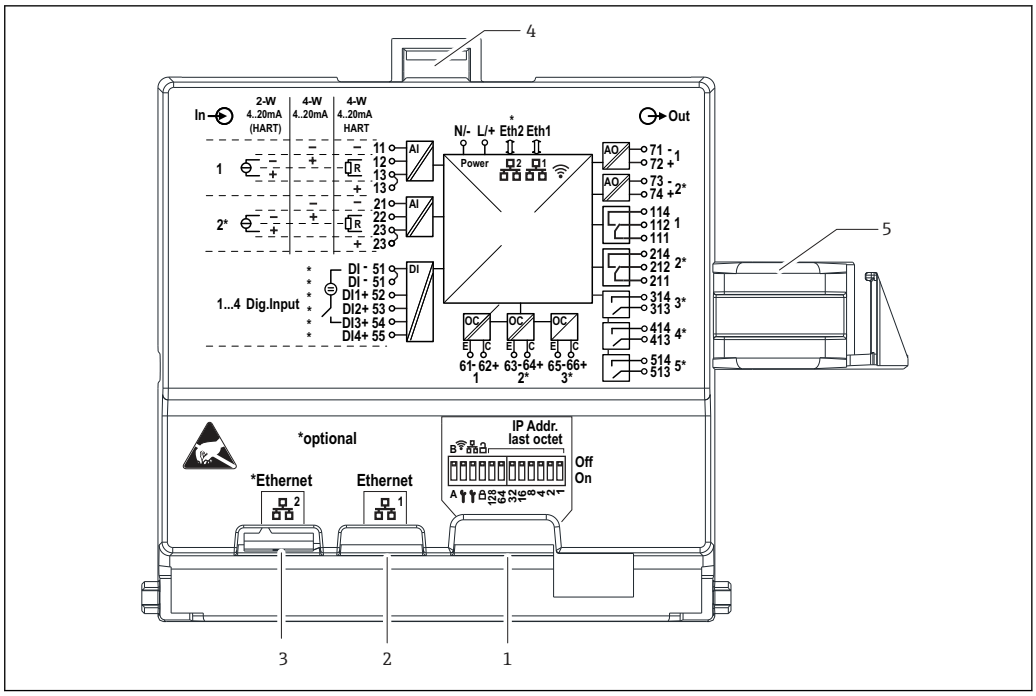

A0052157

13 *Connections on the rear side of display for the polycarbonate field housing*

1 *DIP switch*
2 *Ethernet connection 1 (standard)*
3 *Ethernet connection 2 (optional)*
4 *Locking device*
5 *Connecting cable to the main board*

Adapters for RJ45 to M12 connectors are available as an option for the field housing (see "Accessories" section in Operating Instructions). The adapters connect the RJ45 Ethernet interfaces with the M12 connectors mounted in the cable entries. Therefore the connection to the Ethernet interface can be established via an M12 connector without opening the device.

Terminals

The device is fitted with push-in terminals. Rigid conductors or flexible conductors with ferrules can be inserted directly into the terminal without using the lever, and create a contact automatically.

Cable entries

Cable entries of polycarbonate field housing

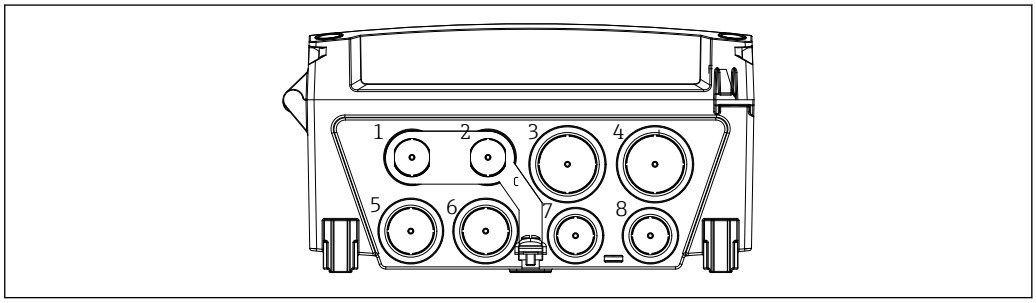

A0061447

14 *Precut openings on the bottom of the housing for the following cable entries (example):*

1 *M16x1.5 for Ethernet 2 when using M12 connection or digital I/O*
2 *M16x1.5 for Ethernet 1 when using M12 connection or digital I/O*
3 *M25x1.5 for Ethernet 2 when using a patch cable, digital I/O, or analog I/O*
4 *M25x1.5 for Ethernet 1 when using a patch cable, digital I/O, or analog I/O*
5 *M20x1.5 for power supply*
6 *M20x1.5 for digital I/O*
7 *M16x1.5 for analog I/O*
8 *M16x1.5 for analog I/O*

Cable entries for aluminum field housing

There are eight M20x1.5 openings with dummy covers for cable entries on the bottom of the field housing.

Cable specification

CAUTION

Unsuitable connection cables may cause overheating and fire hazards, insulation damage, electric shock, power loss, and reduced operating life.

- ▶ Only use connection cables that comply with the specifications below.

Minimum requirement: Cable temperature range ≥ ambient temperature +20 K

For all connections on the field device and for power and relay connections in the case of the panel-mounted and DIN rail device:

- **Conductor cross-section**: 0.2 to 2.5 mm² (26 to 14 AWG)
- **Cross-section with wire end ferrule**: 0.25 to 2.5 mm² (24 to 14 AWG)
- **Stripping length**: 10 mm (0.39 in)

For digital input, open collector and analog input/output connections in the case of panel-mounted and DIN rail device:

- **Conductor cross-section**: 0.2 to 1.5 mm² (26 to 16 AWG)
- **Cross-section with wire end ferrule (excluding collar/including collar)**: 0.25 to 1 mm² (24 to 16 AWG)/ 0.25 to 0.75 mm² (24 to 16 AWG)
- **Stripping length**: 10 mm (0.39 in)

Performance characteristics

Only the performance characteristics of the device are mentioned at this point.

Sensor-specific performance characteristics: See the technical data for the relevant sensor.

Reference operating conditions

- Temperature: +25 °C (+77 °F) ±5 °C (±9 °F)
- Pressure: 960 mbar (14 psi) ±100 mbar (±1.45 psi)
- Humidity: 20 to 60 % r.F.

Maximum measurement error

See the "Sensor inputs" and "Analog output" sections

Response time

The response time is defined from a physical input up to the response at a physical output.

- Response time without HART: < 500 ms
- Response time with HART: < 2 s
- Response time for open circuit: < 5 s

Real-time clock (RTC)

- Automatic or manual summer time changeover.
- Battery buffer. Operating life > 5 years if the device is not supplied with energy, > 10 years if the device is supplied with energy.
- Drift: < 15 min./year
- Time synchronization possible via NTP.

Mounting

Ensure compliance with the permitted ambient conditions during installation and operation. The device must be protected against the effects of heat (see the "Environment" section).

Mounting location

Panel mounting, installation on a DIN rail or installation in the field housing possible. The mounting location must be free from vibrations. A suitable electrical, fire-proof and mechanical enclosure must be provided.

Panel mounting and DIN rail version:
- In the control cabinet outside potentially explosive atmospheres
- At a sufficient distance from high-voltage cables or motor cables as well as contactors or frequency converters
- Minimum distance to the left: Panel-mounted device: 10 mm (0.4 in); DIN rail device: 20 mm (0.8 in)

Field housing:
- Protected from direct sunlight. Use a weather protection cover if necessary (see "Accessories")
- If mounting outdoors: Use overvoltage protection (see "Accessories")
- Minimum clearance to the left: 55 mm (2.17 in); the housing cover cannot be opened otherwise.

Orientation

Vertical

Installation instructions

Special mounting instructions

An optional assembly board is available to mount the field housing, see "Accessories".

Sensor selection and arrangement

Please note the respective Operating Instructions when it comes to installing and mounting the sensor.

Length of connecting cable

See technical data of the respective sensor.

Connecting cable

See technical data of the respective sensor.

Beam angle

See technical data of the respective sensor.

Environment

Ambient temperature range

−40 to +60 °C (−40 to +140 °F) (Type tested)

−35 to +60 °C (−31 to +140 °F) (approved by CSA)

- The functionality of the LCD display becomes limited at T_A < −20 °C (−4 °F).
- If operating outdoors in strong sunlight: Use a weather protection cover.

Storage temperature

−40 to +80 °C (−40 to +176 °F)

Relative humidity

Maximum 95%

Non-condensing in the case of panel-mounted and DIN rail device.

Operating height

Non-ex version:
Maximum 3 000 m (9 842 ft) above standard elevation zero

Ex version:
Maximum 2 000 m (6 562 ft) above standard elevation zero

Degree of protection

Degree of protection of polycarbonate field housing

IP65/NEMA Type 4x

Degree of protection of aluminum field housing

IP65/NEMA Type 4x

Degree of protection of DIN rail housing

IP20

Degree of protection of panel housing

- IP65/NEMA Type 4 (at front, if mounted in cabinet door)
- IP20 (at rear, if mounted in cabinet door)

Electrical safety

- Electrical safety according to IEC 61010-1:2010/AMD1:2016/COR1:2019
- Class:
  230 V_{AC} version: Class II equipment
  24 V_{DC} version: Class III equipment
- Overvoltage category II
- Pollution level 2
- Upstream overcurrent protection device ≤ 10 A

Mechanical load

Vibration resistance

Field housing: Sinusoidal vibrations according to IEC 60068-2-6
* 2 to 8.4 Hz with 3.5 mm (0.14 in) amplitude (peak)
* 8.4 to 500 Hz with 1g acceleration (peak)

For all housing variants: Noise-induced vibrations according to IEC 60068-2-64
* 10 to 200 Hz with 0.003 g^2/Hz
* 200 to 2 000 Hz with 0.001 g^2/Hz

Shock resistance

Field housing: Half-sine vibrations according to IEC 60068-2-27 (30G, 6 ms)

Note: Deviations from normal operation may occur during the test (e.g. switching of relays).

Impact resistance

Impact resistance and drop test according to IEC 61010-1:2010/AMD1:2016-/COR1:2019

Cleaning

A clean, dry cloth can be used to clean the device.

Electromagnetic compatibility (EMC)

Electromagnetic compatibility in accordance with all the relevant requirements outlined in the EN 61326 series and NAMUR Recommendation EMC (NE 21). For details, refer to the Declaration of Conformity.

Under the influence of interference, the measurement error may be 1% of the full scale value (0.5% for sensor inputs in 4 to 20 mA operation).

Interference immunity according to IEC/EN 61326 series, industrial requirements.

With regard to interference emission, the device meets the requirements of Class A, and is only designed for use in an "industrial environment".

Interference emission according to IEC/EN 61326 series (CISPR 11) Group 1 Class A

This device is not intended for use in living areas. Appropriate protection of the radio reception cannot be ensured in such environments.

Mechanical construction

Dimensions

Polycarbonate field housing

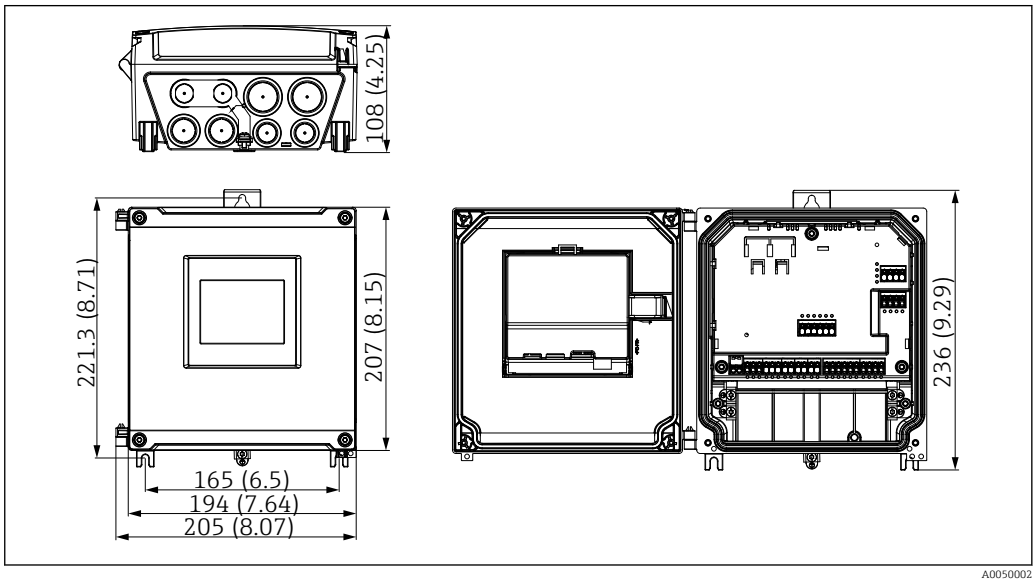

15 Polycarbonate field housing. Unit of measurement mm (in)

Aluminum field housing

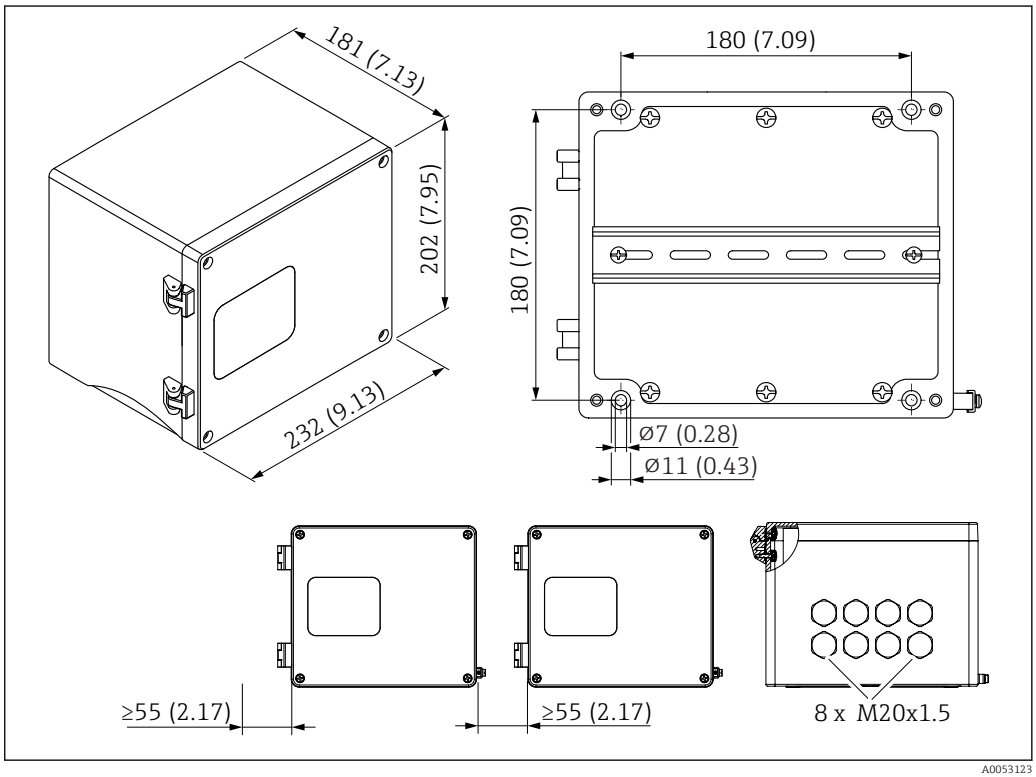

16 Aluminum field housing (for installing the DIN rail device). The cable entries are located on the bottom. Unit of measurement mm (in)

DIN rail device

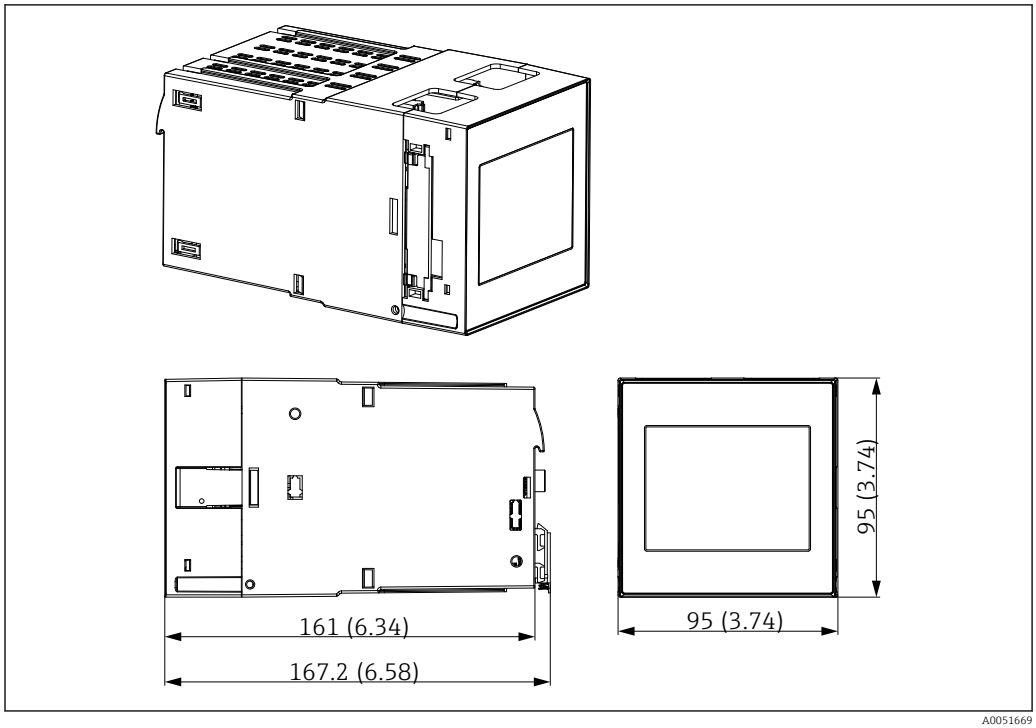

17 *DIN rail housing. Unit of measurement mm (in)*

Panel-mounted device

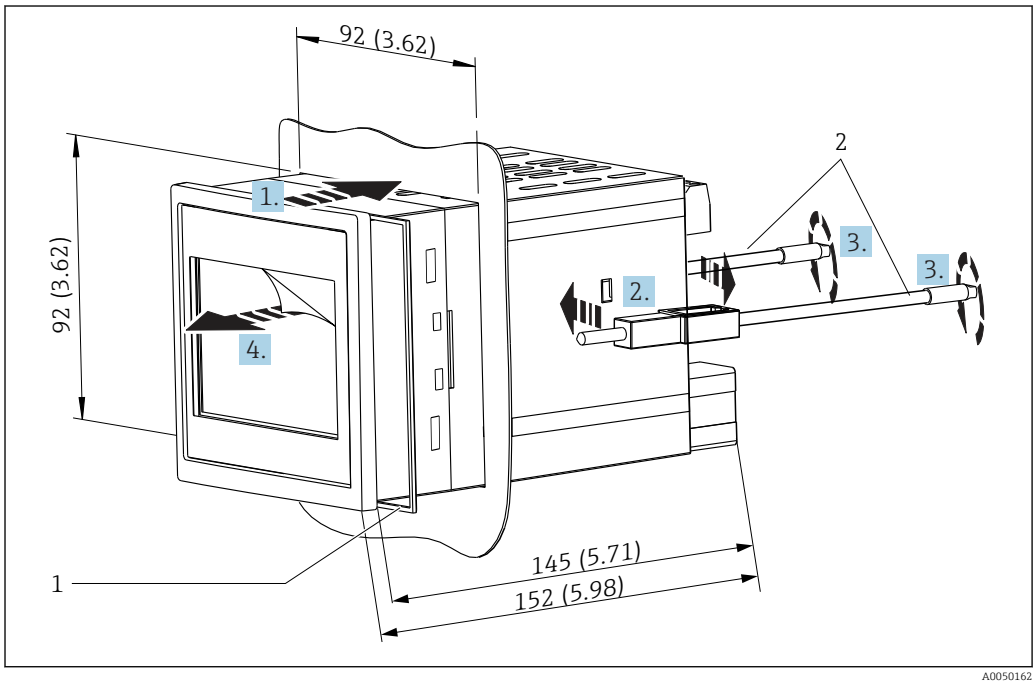

18 *Panel housing (panel cutout 92 mm (3.62 in) x 92 mm (3.62 in)). Unit of measurement mm (in)*

1 *Sealing ring (included in the delivery)*
2 *Fastening clips (2x included in the delivery)*

Weight

Polycarbonate field housing

Approx. 1.6 to 1.8 kg (3.53 to 3.97 lb) depending on device version

Aluminum field housing

Approx. 1.6 to 1.8 kg (3.53 to 3.97 lb) depending on device version

DIN rail device

Approx. 0.7 kg (1.54 lb) depending on device version

Panel-mounted device

Approx. 0.5 kg (1.10 lb)

Materials

Polycarbonate field housing

- Assembly board for pipe mounting: Stainless steel 316L
- Field housing: PC-FR
- Seal: VMQ
- Nameplate: Polyester
- Screws: A4 (1.4578)

Aluminum field housing

- Field housing: Aluminum
- Seal: PUR soft foam
- Nameplate: Polyester
- Screws: A4 (1.4578)

Panel-mounted and DIN rail device

- Housing: PC
- Seal for panel housing: EPDM
- Nameplate: Lasered on

Operability

The device's display and operating options are defined in order code 050 (display, operation)

- 1: None; RJ45 Ethernet
- 2: None; RJ45 Ethernet + WLAN
- 3: 3.5" TFT touch display; RJ45 Ethernet
- 4: 3.5" TFT touch display; RJ45 Ethernet + WLAN

Onsite operation and display

The device is optionally equipped with a 3.5" TFT touch display for onsite operation.

Size (diagonal screen measurement)

90 mm (3.5 ")

Resolution

QVGA, 76,800 pixels (320 x 240)

Backlight

50,000 h half-life (= half brightness)

Number of colors

24 bit color depth; 16.7 million displayable colors

Maximum character size; number of digits

Digit height max. 50 pixels or 13 mm with max. seven digits

Viewing angle

Max. viewing angle range: 85 ° in all directions from the display central axis

Screen displays

- Users can choose between black and white for the background color.
- Active channels can be assigned to up to six groups. For unique identification, each group can be given a descriptive name.
- Linear scaling
- Horizontal curve display, bar graph display or digital display

Elements on front of device with touch display

The device version without display features 3 LEDs: DS (device status), NS (network status) and WLAN status at the bottom left instead of the display

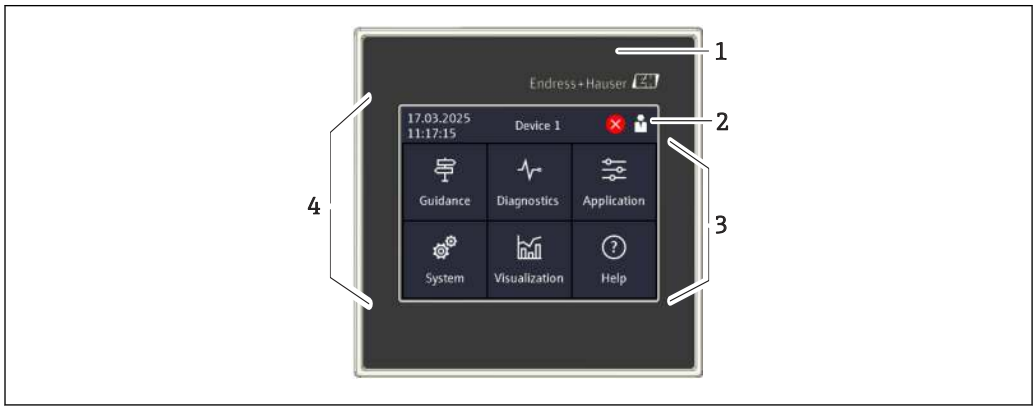

1 *Front of device*
2 *Header: date/time, tag name, diagnostic information, quick access menu (logging in/log out, language)*
3 *Function tiles for display and touch operation*
4 *Touch display*

Light emitting diodes (LEDs)

The LEDs are only visible with the DIN rail version without touch display.

DS (device status): LED for operating status

- **Lit green**
  Normal operation; no faults detected.
- **Flashes red**
  Warning is pending. Details are saved in the diagnostic list.
- **Lit red**
  Alarm is pending. Details are saved in the diagnostic list.
- **Off**
  No supply voltage.

NS (network status): LED for Ethernet fieldbus

- **Lit red**
  Communication active
- **Lit green**
  Connection established, no active communication
- **Off**
  No connection

WLAN: LED for communication

- **Flashing blue**
  Searching for WLAN access point
- **Lit blue**
  Connection established
- **Off**
  No connection

Operation concept

The device can be operated directly on site (option of 3.5" TFT touch display), or through remote configuration via interfaces and operating tools (web server).

Integrated Operating Instructions

Thanks to the device's simple operating concept, it is possible to commission the device for many applications without a hard copy of the Operating Instructions. The device has an integrated help function and displays operating instructions directly on the monitor.

Dynamic operating menu

Only function groups that are relevant for the device version and installation environment are displayed in the menu. The integrated wizard guides the user intuitively through the entire commissioning process.

Locking operation

- Via the lock switch in the terminal compartment
- Via touch display on the operating module
- Automatic operating lock after a set time (configurable)

Languages

The following languages can be selected in order code 500 (operating language display):

English, German, French, Spanish, Italian, Dutch, Portuguese, Polish, Russian, Turkish, Chinese (simplified), Japanese, Korean, Indonesian, Czech, Swedish

Remote operation

The device can be operated independently of the optional touch display using the following operating tools:

Operation options

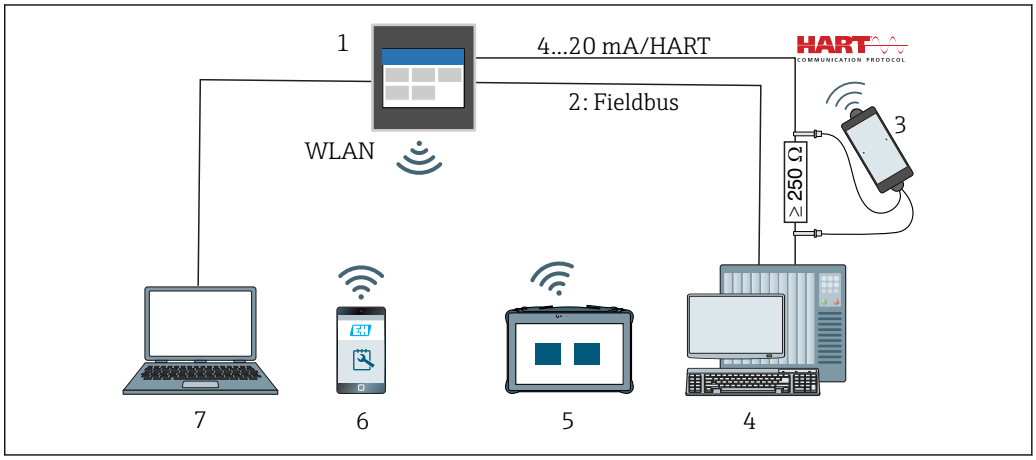

19 *System integration*

1 *FlexView FMA90*
2 *Fieldbus: communication via Ethernet fieldbus to PLC (optional)*
3 *Optional: HART modem with connecting cable, e.g. Commubox FXA195 or VIATOR Bluetooth (restricted operation)*
4 *Optional: PLC via HART protocol (FDI package, restricted operation)*
5 *Field Xpert SMT70 via WLAN and web server*
6 *Operation and configuration via WLAN and web server*
7 *Operation and configuration via Ethernet and web server*

Device access via WLAN

The device is optionally equipped with WLAN. In addition to Ethernet TCP/IP, device access is therefore also possible via WLAN.

Operation options via web server

A web server is integrated into the device. The web server offers the following functionality:
- Easy configuration without additional installed software
- Instantaneous value display and diagnostics information
- Display of current measured value curves

- Display of events and logbook entries
- Device firmware update
- Device configuration indicated as PDF

System integration

Communication	Driver technology	Configuration possible	Systems (examples)
HART	EDD	No	EDD hosts (e.g. Emerson AMS, Yokogawa PRM)
HART	EDD (Siemens)	No	Siemens PDM
Modbus TCP		No	Control systems, e.g. Siemens, Emerson

HART slave communication and Modbus TCP server communication are order options. For further details on system connection, see the associated Operating Instructions.

Supported operating tools

Device configuration and measured value retrieval can also be done via interfaces. The following operating tools are available for this purpose:

Operating tool	Functions	Communication
Web server (integrated into the device; access via browser)	▪ Easy configuration without additional installed software ▪ Display of data and measured value curves via the web browser ▪ Remote access to device and diagnostic information	Ethernet, WLAN

Certificates and approvals

Current certificates and approvals for the product are available at www.endress.com on the relevant product page:

1. Select the product using the filters and search field.
2. Open the product page.
3. Select **Downloads**.

Ordering information

Detailed ordering information is available from your nearest sales organization www.addresses.endress.com or in the Product Configurator at www.endress.com:

1. Select the product using the filters and search field.
2. Open the product page.
3. Select **Configuration**.

Scope of delivery

The scope of delivery of the device comprises:
- Device (with terminals, according to order)
- Panel-mounted device: Two screw fastening clips, sealing rubber towards the panel wall
- Delivery note
- Hard copy of Brief Operating Instructions
- Hard copy of Ex Safety Instructions (optional)

Accessories

The accessories currently available for the product can be selected at www.endress.com:

1. Select the product using the filters and search field.
2. Open the product page.

3. Select **Spare parts & Accessories**.

Device-specific accessories

Type
Stainless steel 316Ti (1.4571) weather protection cover for polycarbonate field housing

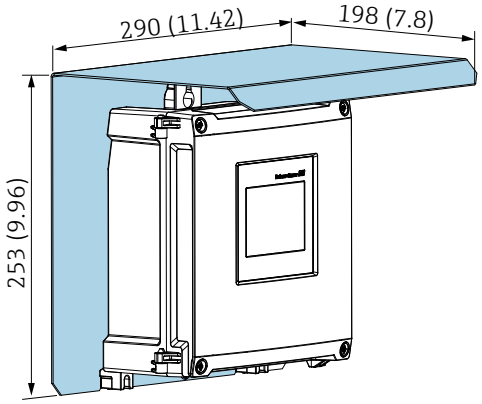

20 *Weather protection cover for direct wall mounting or using assembly board for pipe mounting. Unit of measurement mm (in)*

Assembly board for pipe mounting for polycarbonate field housing

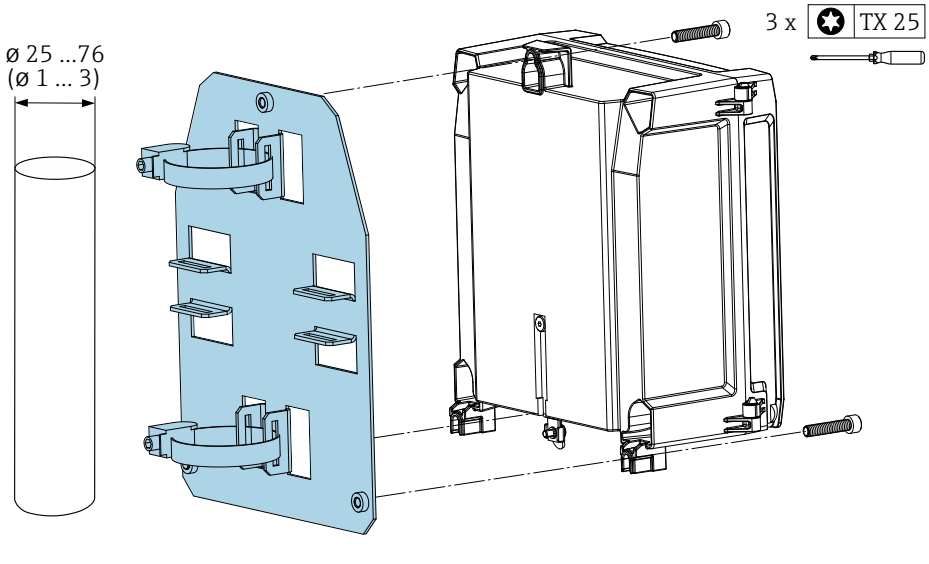

21 *Mounting plate for pipe mounting of polycarbonate field housing. Unit of measurement mm (in)*

- Pipe diameter: 25 to 76 mm (1 to 3 in)
- Dimensions: 210 x 110 mm (8.27 x 4.33 in)
- Material: Stainless steel 316L
- Mounting accessories: Fastening clips, screws and nuts are supplied.

Cable glands 4x M16x1.5/2x M20x1.5/2x M25x1.5

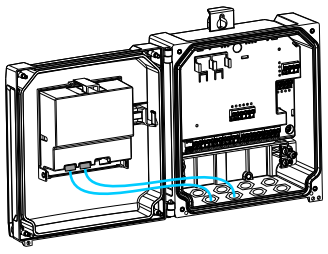

Cable with M12 to RJ45 connector, 345 mm (13.58 in)

Service-specific accessories

Software

Netilion
With the Netilion IIoT ecosystem, Endress+Hauser enables the optimization of plant performance, digitization of workflows, sharing of knowledge and improved collaboration. Drawing upon decades of experience in process automation, Endress+Hauser offers the process industry an IIoT ecosystem designed to effortlessly extract insights from data. These insights allow process optimization, leading to increased plant availability, efficiency, reliability and ultimately a more profitable plant.

www.netilion.endress.com

Field Xpert SMT50
Universal, high-performance tablet PC for device configuration.

www.endress.com/smt50

Online tools

Product information about the entire life cycle of the device is available at:
www.endress.com/onlinetools

System components

Surge arrester modules from the HAW product family

Surge arrester modules for DIN rail and field device mounting, for the protection of plants and measuring instruments with power supply and signal/communication lines.

More detailed information: www.endress.com

Documentation

The following document types are available in the Downloads area of the Endress+Hauser website (www.endress.com/downloads), depending on the product configuration:

Document type	Purpose and content of the document
Technical Information (TI)	**Planning aid** This document contains all the technical data on the product and provides an overview of everything that can be ordered with the product.
Brief Operating Instructions (KA)	**Quick guide to obtaining the first measured value** The Operating Instructions contain all the essential information about the product from incoming acceptance to initial commissioning.
Operating Instructions (BA)	**Reference** The Operating Instructions contain the information that is required in the various phases of the life cycle of the product: From product identification, incoming acceptance and storage, to mounting, connection, operation and commissioning through to troubleshooting, maintenance and disposal.
Description of Device Parameters (GP)	**Reference for parameters** The document contains detailed explanations of readable or configurable parameters in the product. The description is aimed at those who work with the product over its entire life cycle and perform specific configurations.
Safety Instructions (XA)	Safety Instructions for electrical equipment in hazardous areas are supplied with the product depending on the approval. These are an integral part of the Operating Instructions. The nameplate indicates the Safety Instructions (XA) that are relevant to the product.
Supplementary device-dependent documentation (SD/FY)	Always comply strictly with the instructions in the relevant supplementary documentation. The supplementary documentation is an integral part of the product documentation.



www.addresses.endress.com

Endress+Hauser

People for Process Automation