TI01793T/09/EN/02.25-00
71711896
2025-05-12

Technical Information
iTHERM ModuLine TM112

Industrial modular thermometer



Imperial RTD/TC thermometer for a wide range of industrial applications

Application

- For universal use
- Measuring range: −200 to +1 100 °C (−328 to +2 012 °F)
- Pressure range: up to 75 bar (1 088 psi)

Your benefits

- User-friendly and reliable from product selection to maintenance
- iTHERM inserts: full traceability and consistently high product quality for reliable measured values
- iTHERM QuickSens: fastest response times of 1.5 s for optimum process control
- iTHERM StrongSens: unsurpassed vibration resistance (60g) for ultimate plant safety
- International certification: e.g. Explosion protection in accordance with ATEX, IECEx, CSA and INMETRO; functional safety (SIL)
- iTEMP temperature transmitter with all common communication protocols and optional Bluetooth® connectivity

Endress+Hauser
People for Process Automation

Table of contents

Function and system design 3
iTHERM ModuLine 3
Measuring principle 4
Measuring system 4
Modular design 5

Input 7
Measured variable 7
Measuring range 7

Output 7
Output signal 7
Family of temperature transmitters 7

Power supply 8
Terminal assignment 8
Terminals 12
Cable entries 12
Overvoltage protection 18

Performance characteristics 18
Reference operating conditions 18
Maximum measurement error 19
Ambient temperature effect 20
Self-heating 20
Response time 20
Calibration 21
Insulation resistance 22

Installation 22
Orientation 22
Installation instructions 22

Environment 23
Ambient temperature range 23
Storage temperature 23
Humidity 23
Climate class 23
Degree of protection 24
Shock and vibration resistance 24
Electromagnetic compatibility (EMC) 24

Process 24
Process temperature range 24
Process pressure range 24

Mechanical construction 25
Design, dimensions 25
Weight 27
Materials 27
Process connections 28
Inserts 29
Surface roughness 29
Terminal heads 29

Certificates and approvals 37

Ordering information 37

Accessories 37
Service-specific accessories 37
Online tools 38
System components 38

Documentation 38

Function and system design

iTHERM ModuLine This thermometer is part of the product line of modular thermometers for industrial applications.

Differentiating factors when selecting a suitable thermometer:

Thermowell	Direct contact - without thermowell	Thermowell from barstock material
Device type	Imperial	
Thermometer	TM112 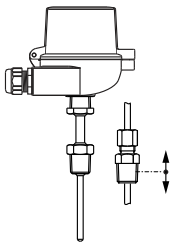 A0055122	TM152 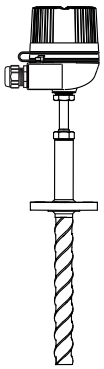 A0052360
FLEX segment	**E**	**E**
Properties	iTHERM StrongSens and iTHERM QuickSens inserts	▪ iTHERM StrongSens and iTHERM QuickSens inserts ▪ iTHERM QuickNeck ▪ iTHERM TwistWell ▪ Fast response times ▪ Dual-seal technology ▪ Dual-compartment housing
Hazardous area	EX	EX

Measuring principle

Resistance thermometers (RTD)

These resistance thermometers use a Pt100 temperature sensor according to IEC 60751. The temperature sensor is a temperature-sensitive platinum resistor with a resistance of 100 Ω at 0 °C (32 °F) and a temperature coefficient $\alpha = 0.003851\ °C^{-1}$.

There are generally two different kinds of platinum resistance thermometers:

- **Wire-wound (WW):WW** In these thermometers, a double coil of fine, high-purity platinum wire is accommodated in a ceramic support. This support is then sealed top and bottom with a ceramic protective layer. Such resistance thermometers not only facilitate very reproducible measurements but also offer good long-term stability of the resistance/temperature characteristic within temperature ranges up to 600 °C (1 112 °F). This type of sensor is relatively large in size and is comparatively sensitive to vibrations.
- **Thin-film platinum resistance thermometers(TF):** A very thin, ultrapure platinum layer, approx. 1 µm thick, is vaporized in a vacuum on a ceramic substrate and then structured photolithographically. The platinum conductor paths formed in this way create the measuring resistance. Additional covering and passivation layers are applied and reliably protect the thin platinum layer from contamination and oxidation, even at high temperatures.

The primary advantages of thin-film temperature sensors over wire wound versions are their smaller sizes and better vibration resistance. It should be noted that, due to the operating principle of TF sensors, they frequently exhibit a relatively slight deviation in their resistance/temperature characteristic from the standard characteristic defined in IEC 60751 at higher temperatures. As a result, the tight limit values of tolerance class A as per IEC 60751 can only be observed with TF sensors at temperatures up to approx. 300 °C (572 °F).

Thermocouples (TC)

Thermocouples are comparatively simple, robust temperature sensors which use the Seebeck effect for temperature measurement: if two electrical conductors made of different materials are connected at a point, a weak electrical voltage can be measured between the two open conductor ends if the conductors are subjected to a thermal gradient. This voltage is called thermoelectric voltage or electromotive force (emf). Its magnitude depends on the type of conducting materials and the temperature difference between the "measuring point" (the junction of the two conductors) and the "cold junction" (the open conductor ends). Accordingly, thermocouples primarily only measure differences in temperature. The absolute temperature at the measuring point can be determined from these if the associated temperature at the cold junction is known or is measured separately and compensated for. The material combinations and associated thermoelectric voltage/temperature characteristics of the most common types of thermocouple are standardized in the IEC 60584 and ASTM E230/ANSI MC96.1 standards.

Measuring system

Endress+Hauser offers a complete portfolio of optimized components for the temperature measuring point – everything needed for the seamless integration of the measuring point into the overall facility. These include:

- Power supply unit/barrier
- Display units
- Overvoltage protection

For more information, see the brochure "System Components - Solutions for a Complete Measuring Point" (FA00016K)

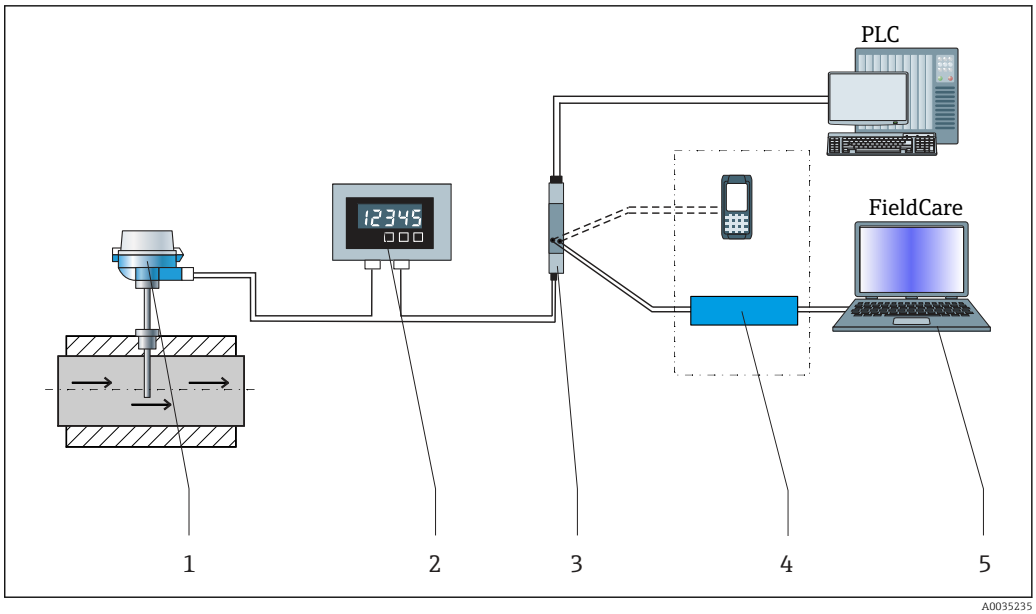

1 *Example of application, measuring point layout with additional Endress+Hauser components*

1 *Installed iTHERM thermometer with HART® communication protocol*
2 *Process indicator from the RIA product family. The process indicator is integrated into the current loop and displays the measuring signal or HART® process variables in digital form. The process indicator does not require an external power supply. It is powered directly from the current loop.*
3 *RN Series active barrier - The active barrier (17.5 V_{DC}, 20 mA) has a galvanically isolated output for supplying voltage to loop-powered transmitters. The universal power supply works with an input supply voltage of 24 to 230 V AC/DC, 0/50/60 Hz, which means that it can be used in all international power grids.*
4 *Communication examples: HART® Communicator (handheld terminal), FieldXpert, Commubox FXA195 for intrinsically safe HART® communication with FieldCare via USB interface*
5 *FieldCare is a FDT-based plant asset management tool from Endress+Hauser, for details see section "accessories".*

Modular design

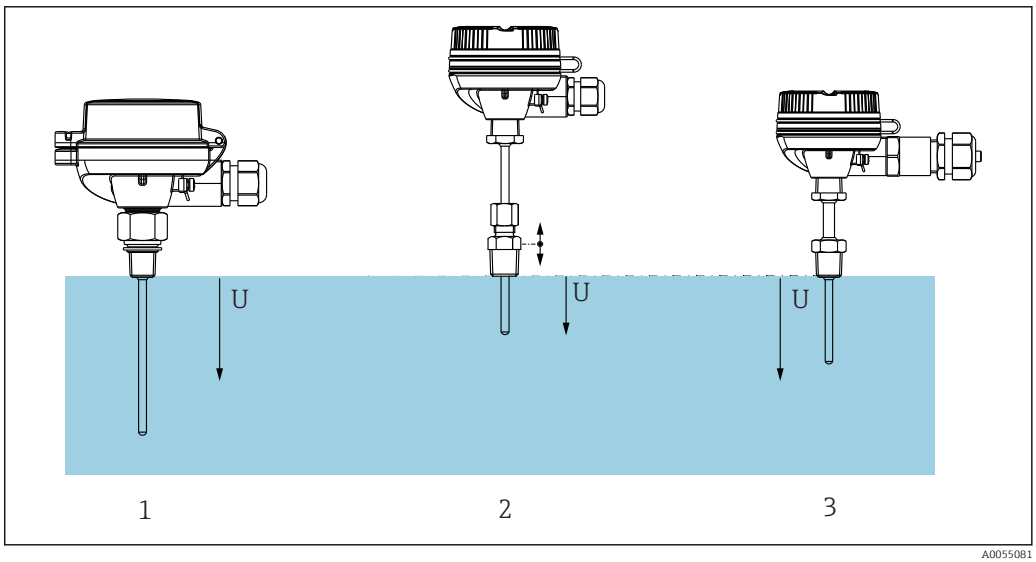

2 *The thermometer is suitable for direct process installation.*

1 *Threaded process connection with short lagging*
2 *Version with compression fitting*
3 *With lagging and threaded process connection*

Design		Options

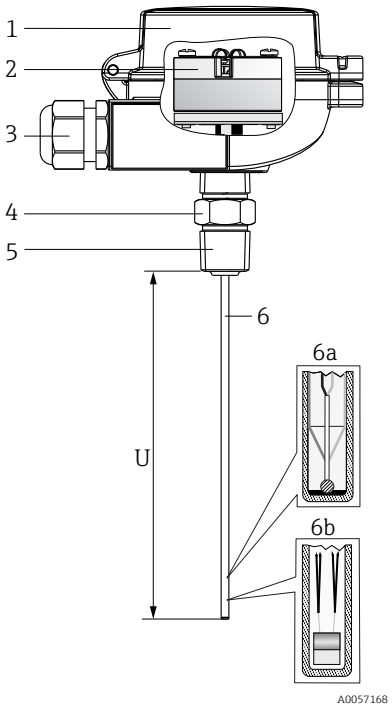	1: Terminal head	Variety of terminal heads made of aluminum, polyamide or stainless steel
		Your benefits:
		▪ Optimum terminal access thanks to low housing edge of bottom section:
		  ▪ Easier to use
		  ▪ Lower installation and maintenance costs
		▪ Optional display: local process indicator for added reliability

	2: Wiring, electrical connection, output signal	▪ Ceramic terminal block ▪ Flying leads ▪ Head transmitter (4 to 20 mA, HART®, PROFINET® with Ethernet-APL, IO-Link®, PROFIBUS® PA, FOUNDATION™ Fieldbus), single-channel or dual-channel) ▪ Plug-on display
	3: Plug or cable gland	▪ PROFIBUS® PA/FOUNDATION™ Fieldbus/PROFINET®/IO-Link® plug, 4-pin ▪ 8-pin plug ▪ Polyamide, aluminum cable glands
	4: Lagging	Different options are available for the lagging ▪ Without extension (versions without fixed process connection) ▪ Defined extension (minimum available extension for fixed process connections) ▪ Extension welded in place (selectable lengths)
	5: Process connection	External threads and compression fittings as process connections

	6: Insert
	6a: iTHERM QuickSens
	6b: iTHERM StrongSens
		The sheath of the insert is in direct contact with the process medium and does not have to be inserted into a thermowell. The process connection is welded to the insert. The insert is not replaceable and not spring-loaded. However, if a compression fitting is used as the process connection, the insert can be replaced. Sensor models: RTD - wire wound (WW), thin film sensor (TF) or thermocouples type K, J or N. Insert diameter Ø3.175 mm (⅛ in) or Ø6.35 mm (¼ in), depending on thermowell tip or selected thermometer
		Your benefits:
		▪ **iTHERM QuickSens** - insert with the world's fastest response time:
		  ▪ Fast, highly accurate measurements, delivering maximum process safety and control
		  ▪ Quality and cost optimization
		  ▪ Minimization of necessary immersion length: better product protection thanks to improved process flow
		▪ **iTHERM StrongSens** - insert with unbeatable durability:
		  ▪ Vibration resistance 60g: lower life cycle costs thanks to longer operating life and high plant availability
		  ▪ Automated, traceable production: top quality and maximum process safety
		  ▪ High long-term stability: reliable measured values and high level of system safety

Input

Measured variable

Temperature (temperature-linear transmission behavior)

Measuring range

Depends on the type of sensor used

Sensor type	Measuring range
Pt100 thin film (TF), basic	−50 to +200 °C (−58 to +392 °F)
Pt100 thin film (TF), iTHERM QuickSens	−50 to +200 °C (−58 to +392 °F)
Pt100 thin film (TF), standard	−50 to +400 °C (−58 to +752 °F)
Pt100 thin film (TF), iTHERM StrongSens, vibration-resistant > 60 g	−50 to +500 °C (−58 to +932 °F)
Pt100 wire wound (WW), extended measuring range	−200 to +600 °C (−328 to +1 112 °F)
Thermocouple TC, type J	−40 to +750 °C (−40 to +1 382 °F)
Thermocouple TC, type K	−40 to +1 100 °C (−40 to +2 012 °F)
Thermocouple TC, type N	

Output

Output signal

The measured values can be transmitted in two ways:

- Via directly-wired sensors: sensor measured values are forwarded without an iTEMP transmitter.
- By selecting the appropriate iTEMP transmitter via all common protocols.

All iTEMP transmitters are mounted directly in the terminal head and wired with the sensory mechanism.

Family of temperature transmitters

Thermometers fitted with iTEMP transmitters are an installation-ready complete solution to improve temperature measurement by significantly increasing measurement accuracy and reliability, when compared to direct wired sensors, as well as reducing both wiring and maintenance costs.

4 to 20 mA head transmitters
They offer a high degree of flexibility, thereby supporting universal application with low inventory storage. The iTEMP transmitters can be configured quickly and easily at a PC. Endress+Hauser offers free configuration software which can be downloaded from the Endress+Hauser Website.

HART® head transmitters
The iTEMP transmitter is a 2-wire device with one or two measuring inputs and one analog output. The device not only transfers converted signals from resistance thermometers and thermocouples, it also transfers resistance and voltage signals using HART® communication. Swift and easy operation, visualization and maintenance using universal configuration software like FieldCare, DeviceCare or FieldCommunicator 375/475. Integrated Bluetooth® interface for the wireless display of measured values and configuration via Endress +Hauser SmartBlue (app), optional.

PROFIBUS® PA head transmitters
Universally programmable iTEMP transmitter with PROFIBUS® PA communication. Conversion of various input signals into digital output signals. High measurement accuracy over the complete ambient temperature range. PROFIBUS PA functions and device-specific parameters are configured via fieldbus communication.

FOUNDATION Fieldbus™ head transmitter
Universally programmable iTEMP transmitter with FOUNDATION Fieldbus™ communication. Conversion of various input signals into digital output signals. High measurement accuracy over the complete ambient temperature range. All iTEMP are approved for use in all the main process control systems. The integration tests are performed in Endress+Hauser's 'System World'.

Head transmitter with PROFINET® and Ethernet-APL™
The iTEMP transmitter is a 2-wire device with two measuring inputs. The device not only transfers converted signals from resistance thermometers and thermocouples, it also transfers resistance and voltage signals using the PROFINET® protocol. Power is supplied via the 2-wire Ethernet connection according to IEEE 802.3cg 10Base-T1. The iTEMP can be installed as an intrinsically safe electrical apparatus in Zone 1 hazardous areas. The device can be used for instrumentation purposes in the terminal head form B (flat face) according to DIN EN 50446.

Head transmitter with IO-Link®
The iTEMP transmitter is an IO-Link® device with a measurement input and an IO-Link® interface. It offers a configurable, simple and cost-effective solution thanks to digital communication via IO-Link®. The device is mounted in a terminal head form B (flat face) as per DIN EN 5044.

Advantages of the iTEMP transmitters:
- Double or single sensor input (optionally for certain transmitters)
- Attachable display (optionally for certain transmitters)
- Unsurpassed reliability, accuracy and long-term stability in critical processes
- Mathematical functions
- Monitoring of the thermometer drift, sensor backup functionality, sensor diagnostic functions
- Sensor-transmitter-matching based on the Callendar van Dusen coefficients (CvD).

Field transmitter
Field transmitter with HART®, FOUNDATION Fieldbus™ or PROFIBUS® PA communication and backlighting. Can be read easily from a distance, in sunlight and at night. Large measurement value format, bar graphs and faults are displayed. The benefits are: dual sensor input, highest reliability in harsh industrial environments, mathematical functions, thermometer drift monitoring and sensor back-up functionality, corrosion detection.

Power supply

The sensor connection wires are equipped with terminal lugs. The nominal diameter of the lug is 1.3 mm (0.05 in).

Terminal assignment

RTD sensor connection type

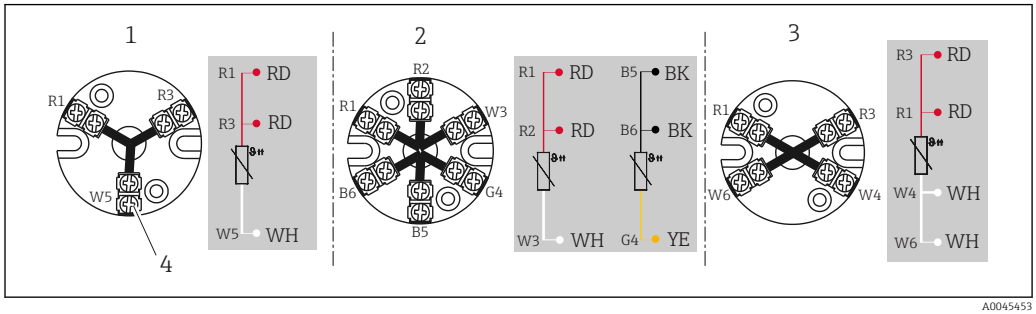

3 *Mounted ceramic terminal block*

1 3-wire
2 2x3-wire
3 4-wire
4 Outside screw

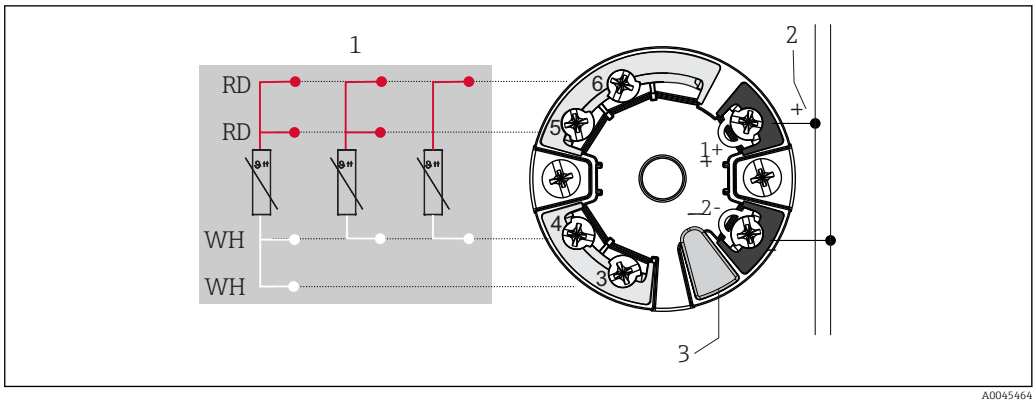

4 *Head-mounted iTEMP TMT7x transmitter or iTEMP TMT31 (single sensor input)*

1 Sensor input, RTD, 4-, 3- and 2-wire
2 Power supply/bus connection
3 Display connection/CDI interface

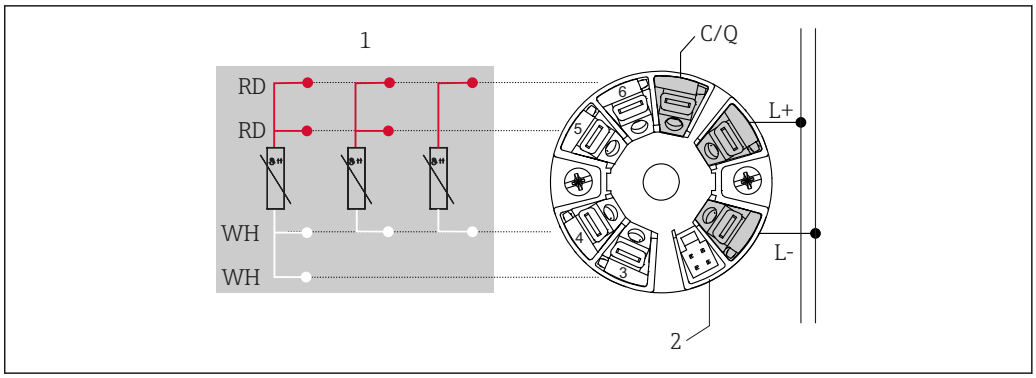

5 *Head-mounted iTEMP TMT36 transmitter (single sensor input)*

1 RTD sensor input: 4-, 3- and 2-wire
2 Display connection
L+ 18 to 30 V_{DC} power supply
L- 0 V_{DC} power supply
C/Q IO-Link or switch output

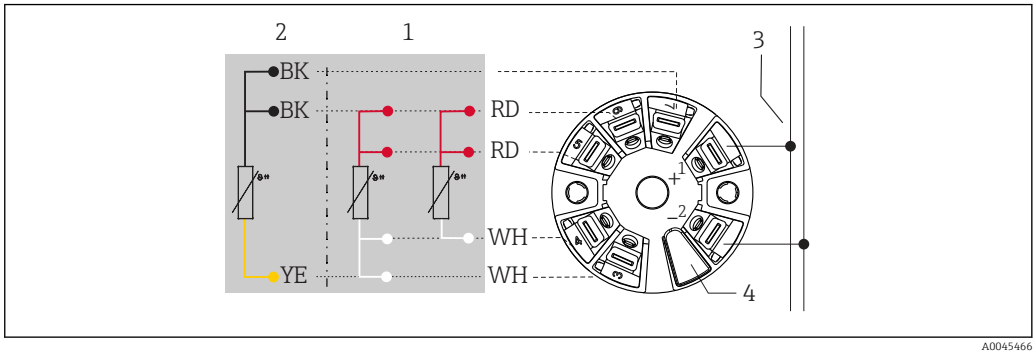

6 *Head-mounted iTEMP TMT8x transmitter (dual sensor input)*

1 Sensor input 1, RTD, 4- and 3-wire
2 Sensor input 2, RTD, 3-wire
3 Fieldbus connection and power supply
4 Display connection

Mounted field transmitter: Fitted with screw terminals

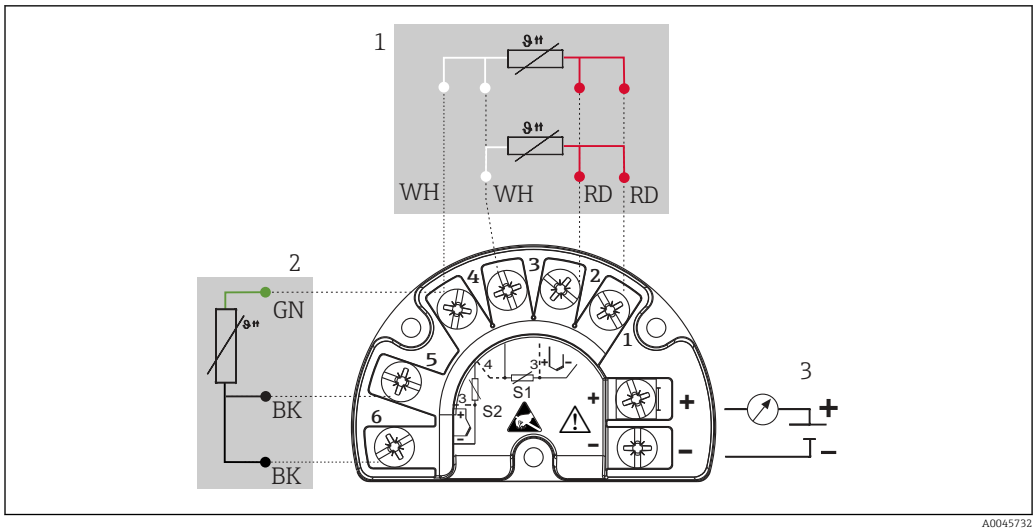

7 iTEMP TMT162 (dual input)

1 Sensor input 1, RTD: 3- and 4-wire
2 Sensor input 2, RTD: 3-wire
3 Power supply field transmitter and analog output 4 to 20 mA or fieldbus connection

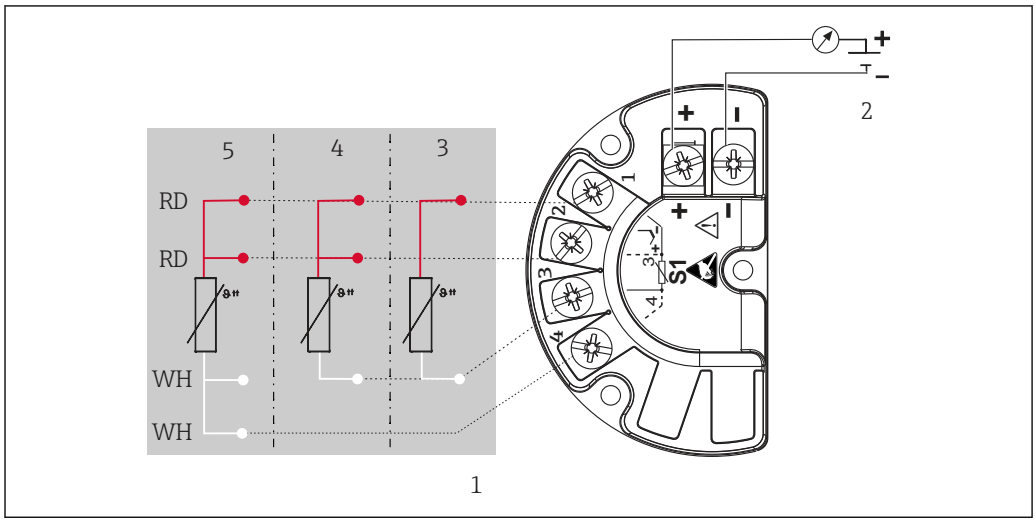

8 iTEMP TMT142B (single input)

1 Sensor input RTD
2 Power supply field transmitter and analog output 4 to 20 mA, HART® signal
3 2-wire
4 3-wire
5 4-wire

Thermocouple (TC) sensor connection type

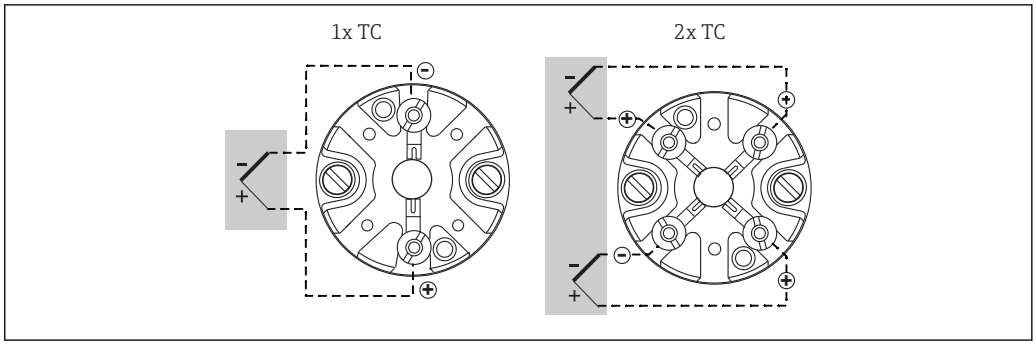

9 *Installed ceramic terminal block for thermocouples.*

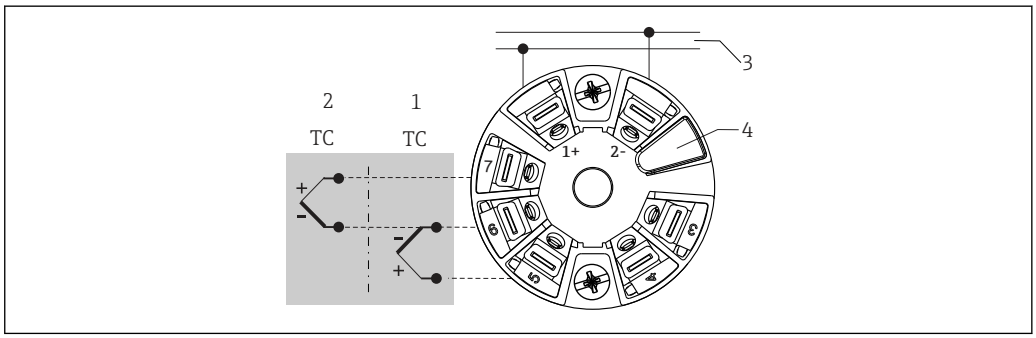

10 *Head-mounted iTEMP TMT8x transmitter (dual sensor input)*

1 *Sensor input 1*
2 *Sensor input 2*
3 *Fieldbus connection and power supply*
4 *Display connection*

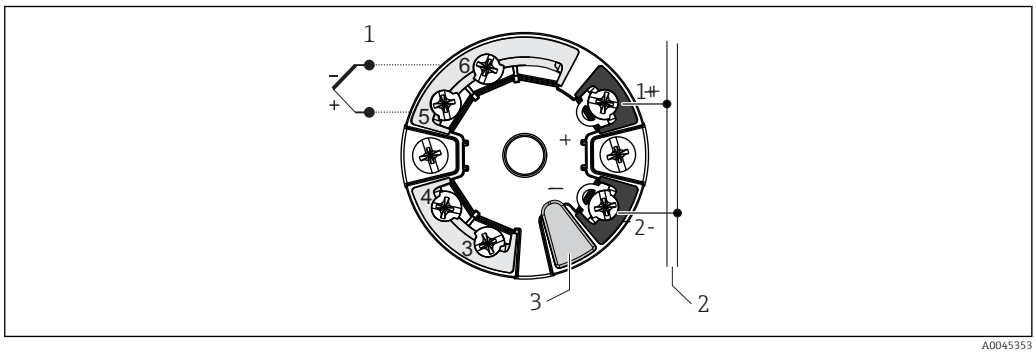

11 *Head-mounted iTEMP TMT7x transmitter or iTEMP TMT31 (single sensor input)*

1 *Sensor input*
2 *Power supply and bus connection*
3 *Display connection and CDI interface*

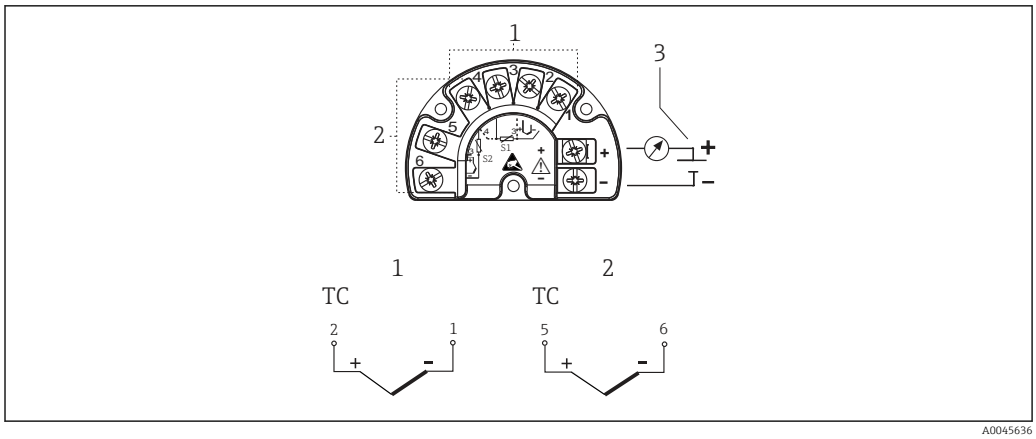

12 *Mounted field transmitter iTEMP TMT162 or TMT142B iTEMP*

1 *Sensor input 1*
2 *Sensor input 2 (not iTEMP TMT142B)*
3 *Supply voltage for field transmitter and analog output 4 to 20 mA or fieldbus communication*

Thermocouple wire colors

As per IEC 60584	As per ASTM E230
▪ Type J: black (+), white (-) ▪ Type K: green (+), white (-) ▪ Type N: pink (+), white (-)	▪ Type J: white (+), red (-) ▪ Type K: yellow (+), red (-) ▪ Type N: orange (+), red (-)

Terminals

iTEMP head transmitters fitted with push-in terminals unless screw terminals are explicitly selected or a double sensor is installed.

Terminal design	Cable design	Cable cross-section
Screw terminals	Rigid or flexible	≤ 1.5 mm² (16 AWG)
Push-in terminals (cable version, stripping length = min. 10 mm (0.39 in)	Rigid or flexible	0.2 to 1.5 mm² (24 to 16 AWG)
	Flexible with ferrules (with or without plastic ferrule)	0.25 to 1.5 mm² (24 to 16 AWG)

Ferrules must be used with push-in terminals and when using flexible cables with a cable cross-section of ≤ 0.3 mm². Otherwise, the use of ferrules when connecting flexible cables to push-in terminals is not recommended.

Cable entries

The cable entries must be selected during configuration of the device. Different terminal heads offer different options in terms of the thread and number of available cable entries.

Device plug

The manufacturer offers a wide variety of device plugs for the simple and fast integration of the thermometer into a process control system. The following tables show the PIN assignments of the various plug connector combinations.

The manufacturer advises against connecting thermocouples directly to connectors. The direct connection to the pins of the plug might generate a new "thermocouple" which influences the accuracy of the measurement. The thermocouples are connected in combination with a iTEMP transmitter.

Abbreviations

#1	Order: first transmitter/insert	#2	Order: second transmitter/insert
i	Insulated. Wires marked 'i' are not connected and are insulated with heat shrink tubes.	YE	Yellow

GND	Grounded. Wires marked 'GND' are connected to the internal grounding screw in the terminal head.	RD	Red
BN	Brown	WH	White
GNYE	Green-yellow	PK	Pink
BU	Blue	GN	Green
GY	Gray	BK	Black

Terminal head with a cable entry [1)]

Plug	**1x PROFIBUS® PA**								**1x FOUNDATION™ Fieldbus (FF)**				**1x PROFINET® and Ethernet-APL™**			
Plug thread	M12				7/8"				7/8"				M12			
PIN number	1	2	3	4	1	2	3	4	1	2	3	4	1	2	3	4
Electrical connection (terminal head)																
Flying leads and TC	Not connected (not insulated)															
3-wire terminal block (1x Pt100)	RD	RD	WH		RD	RD	WH		RD	RD	WH		RD	RD	WH	
4-wire terminal block (1x Pt100)			WH	WH			WH	WH			WH	WH			WH	WH
6-wire terminal block (2x Pt100)	RD (#1) [2)]	RD (#1)	WH (#1)		RD (#1)	RD (#1)	WH (#1)		RD (#1)	RD (#1)	WH (#1)				WH (#1)	
1x TMT 4 to 20 mA or HART®	+	i	-	i	+	i	-	i	+	i	-	i	Cannot be combined			
2x TMT 4 to 20 mA or HART® in the terminal head with a high cover	+(#1)	+(#2)	-(#1)	-(#2)	+(#1)	+(#2)	-(#1)	-(#2)	+(#1)	+(#2)	-(#1)	-(#2)	Cannot be combined			
1x TMT PROFIBUS® PA	+	i	-	GND [3)]	+	i	-	GND [3)]	Cannot be combined							
2x TMT PROFIBUS® PA	+(#1)		-(#1)		+		-									
1x TMT FF	Cannot be combined				Cannot be combined				-	+	GND	i	Cannot be combined			
2x TMT FF									-(#1)	+(#1)						
1x TMT PROFINET®									Cannot be combined				Ethernet-APL signal -	Ethernet-APL signal +	GND	-
2x TMT PROFINET®													Ethernet-APL signal - (#1)	Ethernet-APL signal + (#1)		
PIN position and color code	 1 BN 2 GNYE 3 BU 4 GY A0018929				 1 BN 2 GNYE 3 BU 4 GY A0018930				 1 BU 2 BN 3 GY 4 GNYE A0018931				 1 RD 2 GN A0052119			

1) Options depend on product and configuration
2) Second Pt100 is not connected
3) If a head is used without grounding screw, e.g. plastic housing TA30S or TA30P, insulated 'i' instead of grounded GND

Terminal head with a cable entry [1)]

Plug	4-pin/8-pin							
Plug thread	M12							
PIN number	1	2	3	4	5	6	7	8
Electrical connection (terminal head)								
Flying leads and TC	Not connected (not insulated)							
3-wire terminal block (1x Pt100)	RD	RD	WH		i			
4-wire terminal block (1x Pt100)			WH	WH				
6-wire terminal block (2x Pt100)			WH		BK	BK	YE	
1x TMT 4 to 20 mA or HART®	+(#1)	i	-(#1)	i	i			
2x TMT 4 to 20 mA or HART® in the terminal head with a high cover					+(#2)	i	-(#2)	i
1x TMT PROFIBUS® PA	Cannot be combined							
2x TMT PROFIBUS® PA								
1x TMT FF	Cannot be combined							
2x TMT FF								
1x TMT PROFINET®	Cannot be combined							
2x TMT PROFINET®	Cannot be combined							
PIN position and color code	 1 BN 2 GNYE 3 BU 4 GY A0018929				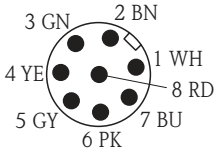 A0018927			

1) Options depend on product and configuration

Terminal head with one cable entry

Plug	1x IO-Link®, 4-pin			
Plug thread	M12			
PIN number	1	2	3	4
Electrical connection (terminal head)				
Flying leads	Not connected (not insulated)			
3-wire terminal block (1x Pt100)	RD	i	RD	WH
4-wire terminal block (1x Pt100)	Cannot be combined			
6-wire terminal block (2x Pt100)				
1x TMT 4 to 20 mA or HART®	Cannot be combined			
2x TMT 4 to 20 mA or HART® in the terminal head with a high cover				
1x TMT PROFIBUS® PA	Cannot be combined			
2x TMT PROFIBUS® PA				
1x TMT FF	Cannot be combined			
2x TMT FF				
1x TMT PROFINET®	Cannot be combined			
2x TMT PROFINET®				
1x TMT IO-Link®	L+	-	L-	C/Q

Plug	1x IO-Link®, 4-pin			
2x TMT IO-Link®	L+ (#1)	-	L- (#1)	C/Q
PIN position and color code	 1 BN 3 BU 4 BK A0055383			

Terminal head with two cable entries [1)]

Plug	2x PROFIBUS® PA								2x FOUNDATION™ Fieldbus (FF)				2x PROFINET® and Ethernet-APL™			
Plug thread 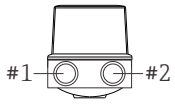 A0021706	M12(#1) / M12(#2)				7/8"(#1)/7/8"(#2)				7/8"(#1)/7/8"(#2)				M12 (#1)/M12 (#2)			
PIN number	1	2	3	4	1	2	3	4	1	2	3	4	1	2	3	4
Electrical connection (terminal head)																
Flying leads and TC	Not connected (not insulated)															
3-wire terminal block (1x Pt100)	RD/i	RD/i	WH/i		RD/i	RD/i	WH/i		RD/i	RD/i	WH/i		RD/i	RD/i	WH/i	
4-wire terminal block (1x Pt100)			WH/i	WH/i			WH/i	WH/i			WH/i	WH/i			WH/i	WH/i
6-wire terminal block (2x Pt100)	RD/BK	RD/BK	WH/YE		RD/BK	RD/BK	WH/YE		RD/BK	RD/BK	WH/YE		RD/BK	RD/BK	WH/YE	
1x TMT 4 to 20 mA or HART®	+/i	i/i	-/i	i/i	+/i	i/i	-/i	i/i	+/i	i/i	-/i	i/i	+/i	i/i	-/i	i/i
2x TMT 4 to 20 mA or HART® in the terminal head with a high cover	+ (#1)/ + (#2)		- (#1)/ -(#2)		+ (#1)/ + (#2)		- (#1)/ -(#2)		+ (#1)/ + (#2)		- (#1)/ -(#2)		+ (#1)/ +(#2)		- (#1)/ -(#2)	
1x TMT PROFIBUS® PA	+/i		-/i	GND/ GND	+/i		-/i	GND/ GND	Cannot be combined							
2x TMT PROFIBUS® PA	+ (#1)/ + (#2)		- (#1)/ -(#2)		+ (#1)/ + (#2)		- (#1)/ -(#2)									
1x TMT FF	Cannot be combined				Cannot be combined				-/i	+/i	i/i	GND/ GND	Cannot be combined			
2x TMT FF									- (#1)/ -(#2)	+ (#1)/ + (#2)						
1x TMT PROFINET®	Cannot be combined				Cannot be combined				Cannot be combined				Ethernet-APL signal -	Ethernet-APL signal +	GND	i

Plug	2x PROFIBUS® PA		2x FOUNDATION™ Fieldbus (FF)	2x PROFINET® and Ethernet-APL™			
2x TMT PROFINET®	Cannot be combined	Cannot be combined	Cannot be combined	Ethernet-APL signal - (#1) and (#2)	Ethernet-APL signal + (#1) and (#2)		
PIN position and color code	 1 BN 2 GNYE 3 BU 4 GY A0018929	 1 BN 2 GNYE 3 BU 4 GY A0018930	 1 BU 2 BN 3 GY 4 GNYE A0018931	 1 RD 2 GN A0052119			

1) Options depend on product and configuration

Terminal head with two cable entries [1)]

Plug	4-pin/8-pin							
Plug thread  A0021706	M12 (#1)/M12 (#2)							
PIN number	1	2	3	4	5	6	7	8

Electrical connection (terminal head)					
Flying leads and TC	Not connected (not insulated)				
3-wire terminal block (1x Pt100)	RD/i	RD/i	WH/i		i/i
4-wire terminal block (1x Pt100)			WH/i	WH/i	
6-wire terminal block (2x Pt100)	RD/BK	RD/BK	WH/YE		
1x TMT 4 to 20 mA or HART®	+/i	i/i	-/i	i/i	
2x TMT 4 to 20 mA or HART® in the terminal head with a high cover	+(#1)/ +(#2)		-(#1)/-(#2)		
1x TMT PROFIBUS® PA	Cannot be combined				
2x TMT PROFIBUS® PA					
1x TMT FF	Cannot be combined				
2x TMT FF					
1x TMT PROFINET®	Cannot be combined				
2x TMT PROFINET®	Cannot be combined				
PIN position and color code	 1 BN 2 GNYE 3 BU 4 GY A0018929				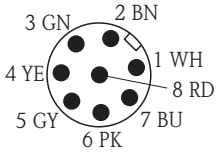 A0018927

1) Options depend on product and configuration

Terminal head with two cable entries

Plug	2x IO-Link®, 4-pin			
Plug thread	M12(#1)/M12 (#2)			
PIN number	1	2	3	4
Electrical connection (terminal head)				
Flying leads	Not connected (not insulated)			
3-wire terminal block (1x Pt100)	RD	i	RD	WH
4-wire terminal block (1x Pt100)	Cannot be combined			
6-wire terminal block (2x Pt100)	RD/BK	i	RD/BK	WH/YE
1x TMT 4 to 20 mA or HART®	Cannot be combined			
2x TMT 4 to 20 mA or HART® in the terminal head with a high cover				
1x TMT PROFIBUS® PA	Cannot be combined			
2x TMT PROFIBUS® PA				
1x TMT FF	Cannot be combined			
2x TMT FF				
1x TMT PROFINET®	Cannot be combined			
2x TMT PROFINET®				
1x TMT IO-Link®	L+	-	L-	C/Q
2x TMT IO-Link®	L+ (#1) and (#2)	-	L- (#1) and (#2)	C/Q
PIN position and color code	 1 BN 3 BU 4 BK A0055383			

Connection combination: insert - transmitter [1)]

Insert	Transmitter connection [2)]			
	iTEMP TMT31/iTEMP TMT7x		iTEMP TMT8x	
	1x 1-channel	2x 1-channel	1x 2-channel	2x 2-channel
1x sensor (Pt100 or TC), flying leads	Sensor (#1) : transmitter (#1)	Sensor (#1) : transmitter (#1) (Transmitter (#2) not connected)	Sensor (#1) : transmitter (#1)	Sensor (#1) : transmitter (#1) Transmitter (#2) not connected
2x sensor (2x Pt100 or 2x TC), flying leads	Sensor (#1) : transmitter (#1) Sensor (#2) insulated	Sensor (#1) : transmitter (#1) Sensor (#2): transmitter (#2)	Sensor (#1) : transmitter (#1) Sensor (#2): transmitter (#1)	Sensor (#1) : transmitter (#1) Sensor (#2): transmitter (#1) (Transmitter (#2) not connected)
1x sensor (Pt100 or TC),with terminal block [3)]	Sensor (#1) : transmitter in cover	Cannot be combined	Sensor (#1) : transmitter in cover	Cannot be combined

Insert	Transmitter connection [2]			
	iTEMP TMT31/iTEMP TMT7x		iTEMP TMT8x	
	1x 1-channel	2x 1-channel	1x 2-channel	2x 2-channel
2x sensor (2x Pt100 or 2x TC) with terminal block	Sensor (#1) : transmitter in cover Sensor (#2) not connected		Sensor (#1) : transmitter in cover Sensor (#2): transmitter in cover	
2x sensors (2x Pt100 or 2x TC) in conjunction with feature 600, option MG [4]	Cannot be combined	Sensor (#1) : transmitter (#1) Sensor (#2): transmitter (#2)	Cannot be combined	Sensor (#1): transmitter (#1) - channel 1 Sensor (#2): transmitter (#2) - channel 1

1) Options depend on product and configuration
2) If 2 transmitters are selected in a terminal head, transmitter (#1) is installed directly on the insert. Transmitter (#2) is installed in the high cover. A TAG cannot be ordered for the second transmitter as standard. The bus address is set to the default value and, if necessary, must be changed manually before commissioning.
3) Only in the terminal head with a high cover, only 1 transmitter possible. A ceramic terminal block is automatically fitted on the insert.
4) Individual sensors each connected to channel 1 of a transmitter

Overvoltage protection

To protect against overvoltages in the supply and signal/communication lines for the thermometer electronics, Endress+Hauser offers surge arresters from the HAW product family.

For further information, see the technical information for the respective surge arrester.

Performance characteristics

Reference operating conditions

This data is relevant for determining the measurement accuracy of the iTEMP transmitters used. See technical documentation of the specific iTEMP transmitter.

Maximum measurement error

RTD resistance thermometer corresponding to IEC 60751

Class	Max. tolerances (°C)	Characteristics
RTD maximum sensor error		
Cl. A	± (0.15 + 0.002 · |t| [1])	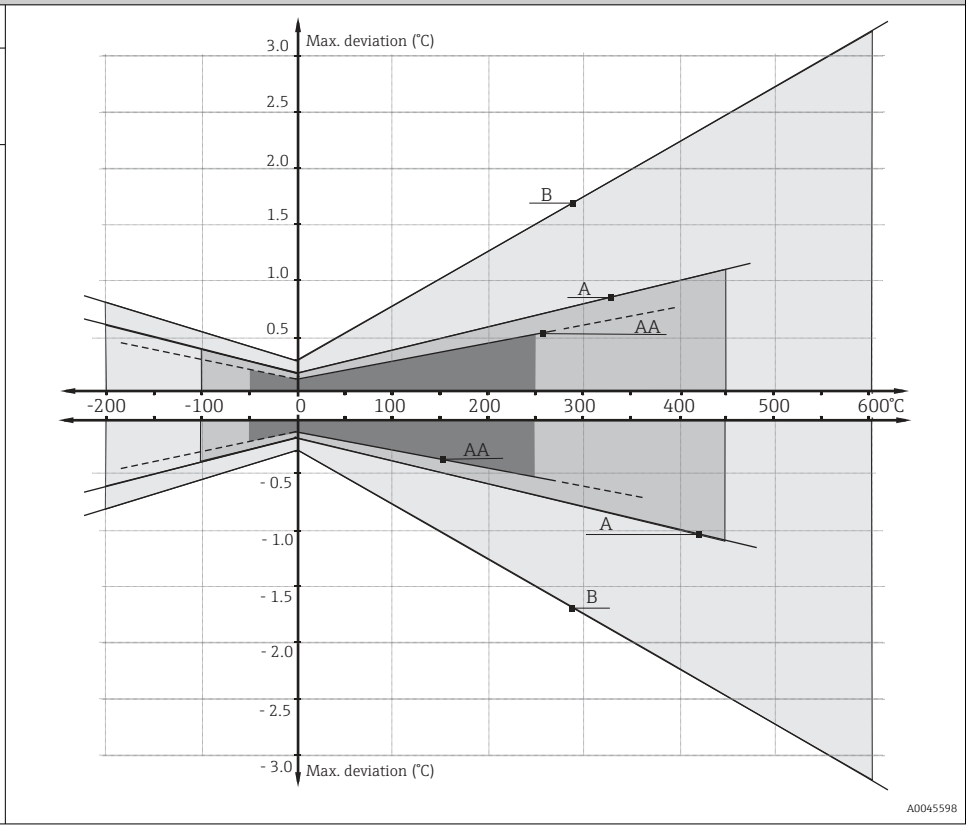
Cl. AA, previously 1/3 Cl. B	± (0.1 + 0.0017 · |t|) [1]	
Cl. B	± (0.3 + 0.005 · |t| [1])	

1) |t| = Temperature absolute value in °C

To get the maximum tolerances in °F, multiply the results in °C by a factor of 1.8.

Temperature ranges

Sensor type [1]	Operating temperature range	Class B	Class A	Class AA
Pt100 (WW)	−200 to +600 °C (−328 to +1 112 °F)	−200 to +600 °C (−328 to +1 112 °F)	−100 to +450 °C (−148 to +842 °F)	−50 to +250 °C (−58 to +482 °F)
Pt100 (TF) Basic	−50 to +200 °C (−58 to +392 °F)	−50 to +200 °C (−58 to +392 °F)	−30 to +200 °C (−22 to +392 °F)	-
Pt100 (TF) Standard	−50 to +400 °C (−58 to +752 °F)	−50 to +400 °C (−58 to +752 °F)	−30 to +250 °C (−22 to +482 °F)	0 to +150 °C (+32 to +302 °F)
Pt100 (TF) iTHERM QuickSens	−50 to +200 °C (−58 to +392 °F)	−50 to +200 °C (−58 to +392 °F)	−30 to +200 °C (−22 to +392 °F)	0 to +150 °C (+32 to +302 °F)
Pt100 (TF) iTHERM StrongSens	−50 to +500 °C (−58 to +932 °F)	−50 to +500 °C (−58 to +932 °F)	−30 to +300 °C (−22 to +572 °F)	0 to +150 °C (+32 to +302 °F)

1) Options depend on product and configuration

Permissible deviation limits of thermoelectric voltages from the standard characteristic for thermocouples as per IEC 60584 or ASTM E230/ANSI MC96.1:

Standard	Type	Standard tolerance		Special tolerance	
IEC 60584		Class	Deviation	Class	Deviation
	J (Fe-CuNi)	2	±2.5 °C (−40 to +333 °C) ±0.0075 |t| [1] (333 to 750 °C)	1	±1.5 °C (−40 to +375 °C) ±0.004 |t| [1] (375 to 750 °C)
	K (NiCr-NiAl) N (NiCrSi-NiSi)	2	±0.0075 |t| [1] (333 to 1200 °C) ±2.5 °C (−40 to +333 °C) ±0.0075 |t| [1] (333 to 1200 °C)	1	±1.5 °C (−40 to +375 °C) ±0.004 |t| [1] (375 to 1000 °C)

1) |t| = absolute value in °C

Thermocouples made of base metals are generally supplied so that they comply with the manufacturing tolerances specified in the tables for temperatures > −40 °C (−40 °F). These materials are generally not suitable for temperatures < −40 °C (−40 °F). The tolerances of Class 3 cannot be met. A separate material must be selected for this temperature range. This cannot be handled via the standard product.

Standard	Type	Tolerance class: Standard	Tolerance class: Special
ASTM E230/ANSI MC96.1		Deviation; the larger value applies in each case	
	J (Fe-CuNi)	±2.2 K or ±0.0075 |t| [1] (0 to 760 °C)	±1.1 K or ±0.004 |t| [1] (0 to 760 °C)
	K (NiCr-NiAl) N (NiCrSi-NiSi)	±2.2 K or ±0.02 |t| [1] (−200 to 0 °C) ±2.2 K or ±0.0075 |t| [1] (0 to 1260 °C)	±1.1 K or ±0.004 |t| [1] (0 to 1260 °C)

1) |t| = absolute value in °C

The materials for thermocouples are generally supplied in such a way that they comply with the tolerances specified in the table for temperatures > 0 °C (32 °F). These materials are generally not suitable for temperatures < 0 °C (32 °F). The specified tolerances cannot be satisfied. A separate material must be selected for this temperature range. This cannot be handled via the standard product.

Ambient temperature effect

Depends on the head transmitter used. For details, see the respective Technical Information.

Self-heating

RTD elements are passive resistors that are measured using an external current. This measurement current causes a self-heating effect in the RTD element itself, which in turn creates an additional measurement error. In addition to the measurement current, the size of the measurement error is also affected by the temperature conductivity and flow velocity of the process. This self-heating error is negligible when an Endress+Hauser iTEMP transmitter (very small measurement current) is used.

Response time

Tests have been performed in water at 0.4 m/s (according to IEC 60751) and with a 10 K temperature change.

Standard Pt100, typical values	t_{50}	t_{90}
Direct contact: TF, WW Diameter: 3.18 mm (⅛ in) or 6.35 mm (¼ in)	5 s	11 s
iTHERM QuickSens	0.5 s	1.5 s

Type J, K, N (TC), typical values	t_{50}	t_{90}
Direct contact Diameter: 3.18 mm (⅛ in) or 6.35 mm (¼ in)	2.5 s	7 s

Calibration

Calibration of thermometers

Calibration refers to the comparison between the display of a piece of measuring equipment and the true value of a variable provided by the calibration standard under defined conditions. The aim is to determine the deviation or measurement errors of the UUT from the true value of the measured variable. For thermometers, calibration is usually only performed on the inserts. This checks only the deviation of the sensor element caused by the insert design. However, in most applications, the deviations caused by the design of the measuring point, integration into the process, the influence of ambient conditions, and other factors are significantly greater than the deviations related to the insert. Calibration of inserts is generally carried out using two methods:

- Calibration at fixed points, e.g. at the freezing point of water at 0 °C,
- Calibration compared against a precise reference thermometer.

The thermometer to be calibrated must display either the fixed point temperature or the temperature of the reference thermometer as accurately as possible. Temperature-controlled calibration baths with very homogeneous thermal values, or special calibration furnaces are typically used for thermometer calibrations. The measurement uncertainty may increase due to heat conduction errors and short immersion lengths. The existing measurement uncertainty is recorded on the individual calibration certificate. For accredited calibrations in accordance with ISO 17025, a measurement uncertainty that is twice as high as the accredited measurement uncertainty is not permitted. If this limit is exceeded, only a factory calibration is possible.

Sensor-transmitter-matching

The resistance/temperature curve of platinum resistance thermometers is standardized but in practice it is rarely possible to keep to the values precisely over the entire operating temperature range. For this reason, platinum resistance sensors are divided into tolerance classes, such as Class A, AA or B as per IEC 60751. These tolerance classes describe the maximum permissible deviation of the specific sensor characteristic curve from the standard curve, i.e. the maximum temperature-dependent characteristic error that is permitted. The conversion of measured sensor resistance values to temperatures in temperature transmitters or other meter electronics is often susceptible to considerable errors as the conversion is generally based on the standard characteristic curve.

When Endress+Hauser iTEMP temperature transmitters are used, this conversion error can be reduced significantly by sensor-transmitter-matching:

- Calibration at three temperatures at least and determination of the actual temperature sensor characteristic curve,
- Adjustment of the sensor-specific polynomial function using Calendar-van Dusen (CvD) coefficients
- Configuration of the temperature transmitter with the sensor-specific CvD coefficients for resistance/temperature conversion, and
- another calibration of the reconfigured temperature transmitter with connected resistance thermometer.

Endress+Hauser offers its customers this kind of sensor-transmitter matching as a separate service. Furthermore, the sensor-specific polynomial coefficients of platinum resistance thermometers are always provided on every Endress+Hauser calibration certificate where possible, e.g. at least three calibration points, so that users themselves can also appropriately configure suitable temperature transmitters.

For the device, Endress+Hauser offers standard calibrations at a reference temperature of −80 to +600 °C (−112 to +1 112 °F) based on the ITS90 (International Temperature Scale). Calibrations in other temperature ranges are available from an Endress+Hauser sales center on request. Calibrations are traceable to national and international standards. The calibration certificate is referenced to the serial number of the device. Only the insert is calibrated.

Minimum immersion length (IL) for inserts required to perform a correct calibration

Due to the limitations of furnace geometries, the minimum immersion lengths must be observed at high temperatures to enable a calibration to be performed with an acceptable degree of measurement uncertainty. The same applies when using a head transmitter. Due to heat conduction, minimum lengths must be observed in order to guarantee the functionality of the transmitter −40 to +85 °C (−40 to +185 °F).

Calibration temperature	Minimum immersion length IL in mm without head transmitter
−196 °C (−320.8 °F)	120 mm (4.72 in) [1]
−80 to +250 °C (−112 to +482 °F)	No minimum immersion length required [2]

Calibration temperature	Minimum immersion length IL in mm without head transmitter
+251 to +550 °C (+483.8 to +1 022 °F)	300 mm (11.81 in)
+551 to +600 °C (+1 023.8 to +1 112 °F)	400 mm (15.75 in)

1) With iTEMP head transmitter min. 150 mm (5.91 in) is required
2) at a temperature of +80 to +250 °C (+176 to +482 °F), the iTEMP head transmitter requires min. 50 mm (1.97 in)

Insulation resistance

- RTD:
  Insulation resistance between the terminals and the extension neck, as per IEC 60751 > 100 MΩ at +25 °C, measured with a minimum testing voltage of 100 V_{DC}.
- TC:
  Insulation resistance as per IEC 61515 between terminals and sheath material for a test voltage of 500 V_{DC}:
  - > 1 GΩ at +20 °C
  - > 5 MΩ at +500 °C

Installation

Orientation

No restrictions. However, self-draining in the process should be guaranteed depending on the application.

Installation instructions

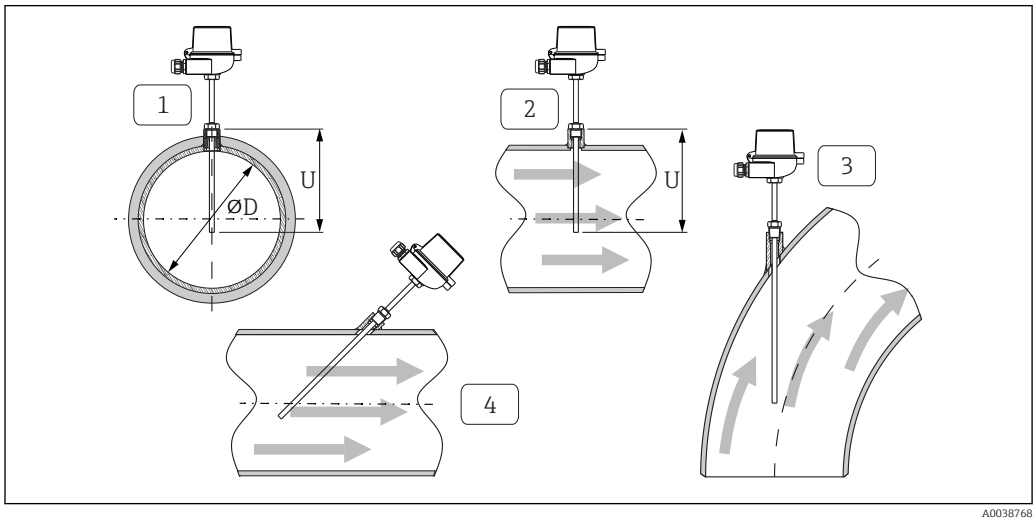

13 Installation examples

1 - 2 In pipes with a small cross-section, the sensor tip should reach or extend slightly past the center axis of the pipe (=U).
3 - 4 Slanted orientation.

The immersion length of the thermometer influences the measurement accuracy. If the immersion length is too small, measurement errors are caused by heat conduction via the process connection and the container wall. If installing into a pipe then the immersion length should be at least half of the pipe diameter. Installation at an angle (see item 3 and 4) could be another solution. When determining the immersion length, all the parameters of the thermometer and of the process to be measured must be taken into account (e.g. flow velocity, process pressure).

The counterparts for process connections and seals are not supplied with the thermometer and must be ordered separately if needed.

Possible bending radius

Sensor type [1]	Diameter ID	Bending radius R	Non-bendable length (tip) NL [2]
Pt100 (TF) standard	Ø6 mm (0.24 in)	Non-bendable	Non-bendable
Pt100 (TF) iTHERM StrongSens	Ø6 mm (0.24 in)	R ≥ 3 x ID	30 mm (1.18 in)
Pt100 (TF) iTHERM QuickSens	Ø3 mm (0.12 in)	Non-bendable	Non-bendable
	Ø6 mm (0.24 in)	R ≥ 3 x ID	30 mm (1.18 in)
Pt100 (WW)	Ø3 mm (0.12 in)	R ≥ 3 x ID	30 mm (1.18 in)
	Ø6 mm (0.24 in)		
	Ø6.35 mm (¼ in)		
Pt100 (TF) basic	Ø6 mm (0.24 in)	Non-bendable	Non-bendable
	Ø6.35 mm (¼ in)		
Thermocouple types J, K, N	Ø3 mm (0.12 in)	R ≥ 3 x ID	30 mm (1.18 in)
	Ø6 mm (0.24 in)		
	Ø6.35 mm (¼ in)		

1) Options depend on product and configuration
2) If a sleeve is overlapped, NL increases to 80 mm.

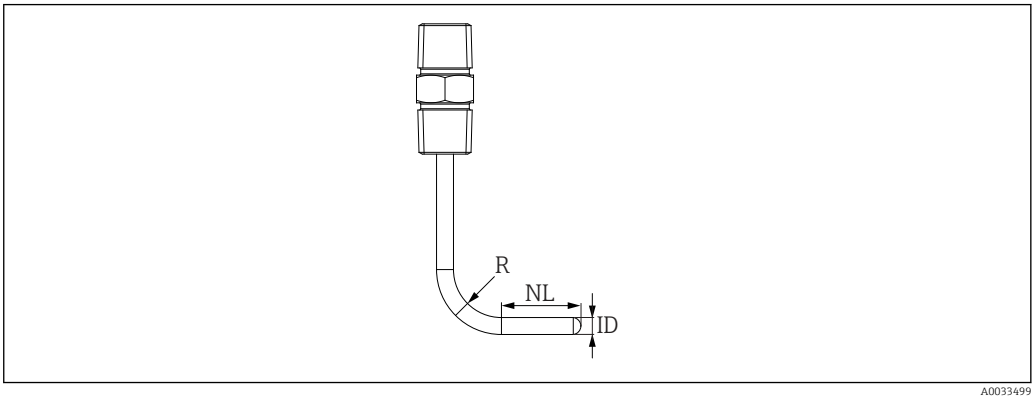

A0033499

Environment

Ambient temperature range

Terminal head	Temperature in °C (°F)
Without mounted head transmitter	Depends on the terminal head used and the cable gland or fieldbus connector; see "Terminal heads" section.
With mounted iTEMP head transmitter	−40 to +85 °C (−40 to +185 °F)
With mounted iTEMP head transmitter and display	−30 to +85 °C (−22 to 185 °F)

Storage temperature

−40 to +85 °C (−40 to +185 °F).

Humidity

Depends on the iTEMP transmitter used. When using iTEMP head transmitters:
- Condensation permitted as per IEC 60068-2-33
- Max. relative humidity: 95% in accordance with IEC 60068-2-30

Climate class

As per EN 60654-1, Class C

Degree of protection

Max. IP 66 (NEMA Type 4x encl.)	Depending on the design (terminal head, connector, etc.)
Partly IP 68	Tested in 1.83 m (6 ft) over 24 h

Shock and vibration resistance

The Endress+Hauser inserts exceed the requirements of IEC 60751 with regard to shock and vibration resistance of 3g in a range of 10 to 500 Hz. The vibration resistance of the measuring point depends on sensor type and design:

Sensor type [1]	Vibration resistance for the sensor tip
Pt100 (WW)	≤ 30 m/s² (≤ 3g)
Pt100 (TF) Basic	
Pt100 (TF) Standard	≤ 40 m/s² (≤ 4g)
Pt100 (TF) iTHERM StrongSens	600 m/s² (60g)
Pt100 (TF) iTHERM QuickSens, version: ø6 mm (0.24 in)	600 m/s² (60g)
Pt100 (TF) iTHERM QuickSens, version: ø3 mm (0.12 in)	≤ 30 m/s² (≤ 3g)
Thermocouple TC, type J, K, N	≤ 30 m/s² (≤ 3g)

1) Options depend on product and configuration

Electromagnetic compatibility (EMC)

Electromagnetic compatibility in accordance with all the relevant requirements of the IEC/EN 61326 series and NAMUR Recommendation EMC (NE21). For details refer to the EU Declaration of Conformity.

Maximum measurement error < 1% of the measuring range.

Interference immunity as per IEC/EN 61326 series, industrial requirements

Interference emission as per IEC/EN 61326 series, Class B equipment

Process

Process temperature range

Depends on the type of sensor and the material used, max. −200 to +1 100 °C (−328 to +2 012 °F)..

Process pressure range

Pressure range:
- Max. 75 bar (1 088 psi) to +200 °C (+392 °F) for standard thin film and iTHERM QuickSens Pt100 sensors.
- Max. 50 bar (725 psi) to +400 °C (+752 °F) for all other sensor types.

The maximum possible process pressure depends on various influencing factors, such as design, process connection and process temperature. For information on the maximum possible process pressures for the individual process connections, see the "Process connection" section.

It is possible to calculate the permitted flow rate according to DIN 43772 for thermometers with a thermowell. A calculation is not standardized and not usual for thermometers without a thermowell. If there are any concerns regarding the mechanical loading capacity of the device, the use of a thermometer with a thermowell is recommended.

Mechanical construction

Design, dimensions

All dimensions in mm (in). The design of the thermometer depends on the general design version used.

Various dimensions, such as the immersion length U for example, are variable values and are therefore indicated as items in the following dimensional drawings.

Variable dimensions:

Item	Description
IL	Insertion length of insert
T	Length of lagging: variable or pre-defined, depends on thermowell version (see also the individual table data)
U	Immersion length: variable, depending on the configuration
ØD	Lagging diameter: 9.525 mm (⅜ in) or 12.7 mm (½ in)
ØID	Insert diameter: ▪ 3.175 mm (⅛ in) ▪ 6.35 mm (¼ in) ▪ 9.525 mm (⅜ in) ▪ 9.525 mm (⅜ in), reduced to 4.7625 mm (³⁄₁₆ in) ▪ 3 mm (0.12 in) ▪ 6 mm (0.24 in)

Thermometer without fixed process connection

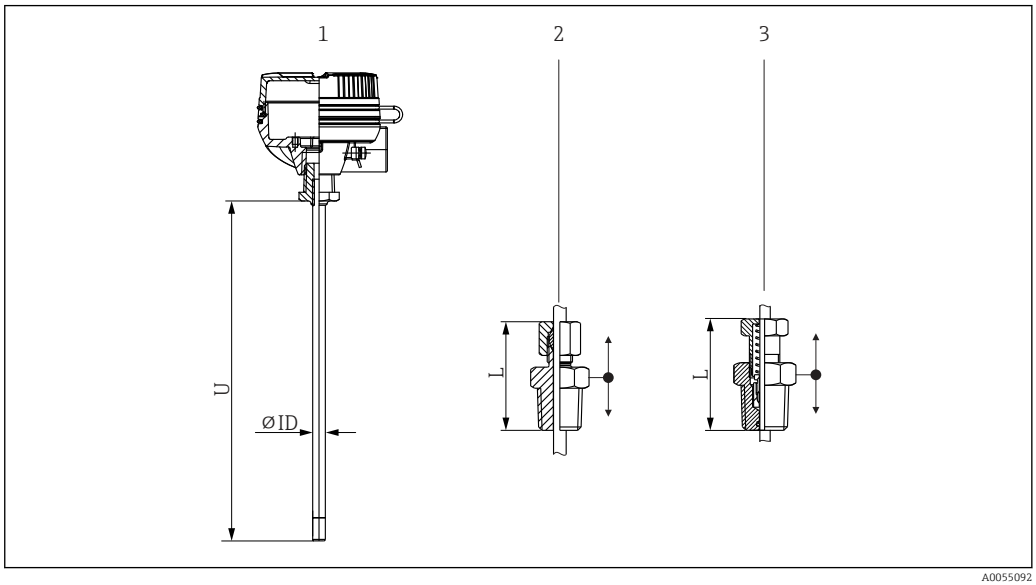

1 Without process connection
2 With compression fitting, NPT thread
3 With spring-loaded compression fitting, NPT thread

Type of compression fitting	L	U_{min} (with use of compression fitting)
NPT thread, not spring loaded	52 mm (2.05 in)	≥ 70 mm (2.76 in)
NPT thread, spring-loaded	60 mm (2.36 in)	

Thermometer with fixed process connection

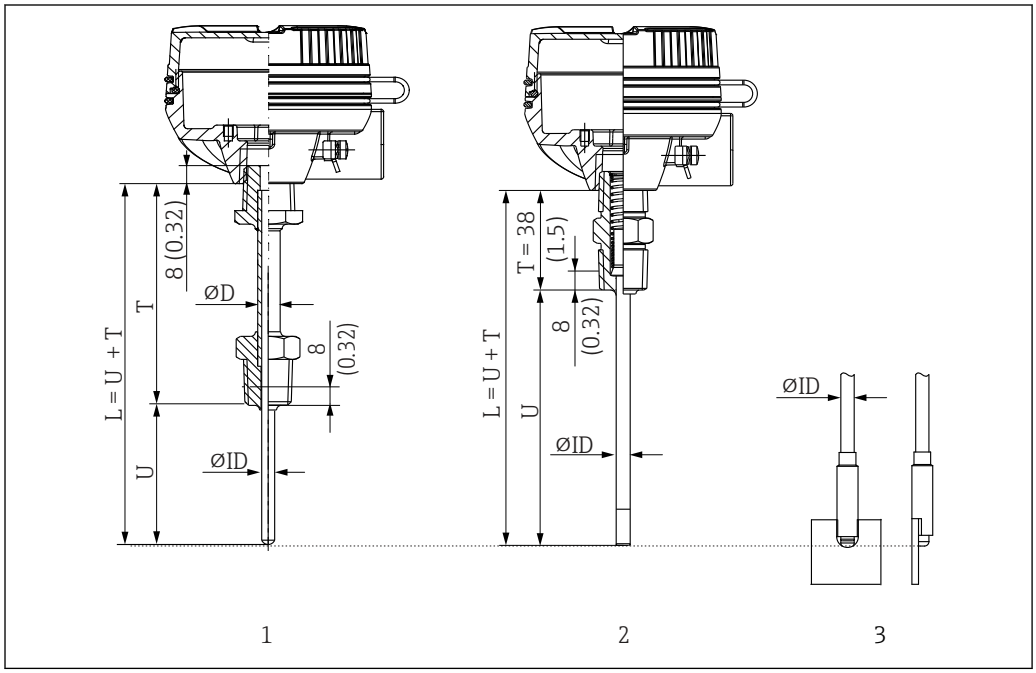

1 With lagging, NPT thread version
2 Without lagging, terminal head process connection, NPT thread version
3 Weld pad, only in version with ØID = 6.35 mm (¼ in)

The weld pad is used to mount the insert tip on pipes or containers. Material: 316L or Alloy 600. Selectable dimensions:
- 19.1 mm (0.75 in) x 19.1 mm (0.75 in) x 3.175 mm (0.125 in)
- 25.4 mm (1 in) x 25.4 mm (1 in) x 3.175 mm (0.125 in)

The versions do not have a replaceable insert.

Minimum length definition

Thermometer version	U	T
1	▪ ≥ 50 mm (1.97 in) for sensor type iTHERM QuickSens ▪ ≥ 40 mm (1.57 in) for all other sensor types	≥ 88.9 mm (3.5 in)
2		38 mm (1.5 in)

As illustrated in the following figure, the lagging length may influence the temperature in the terminal head. This temperature must remain within the limit values defined in the "Operating conditions" section.

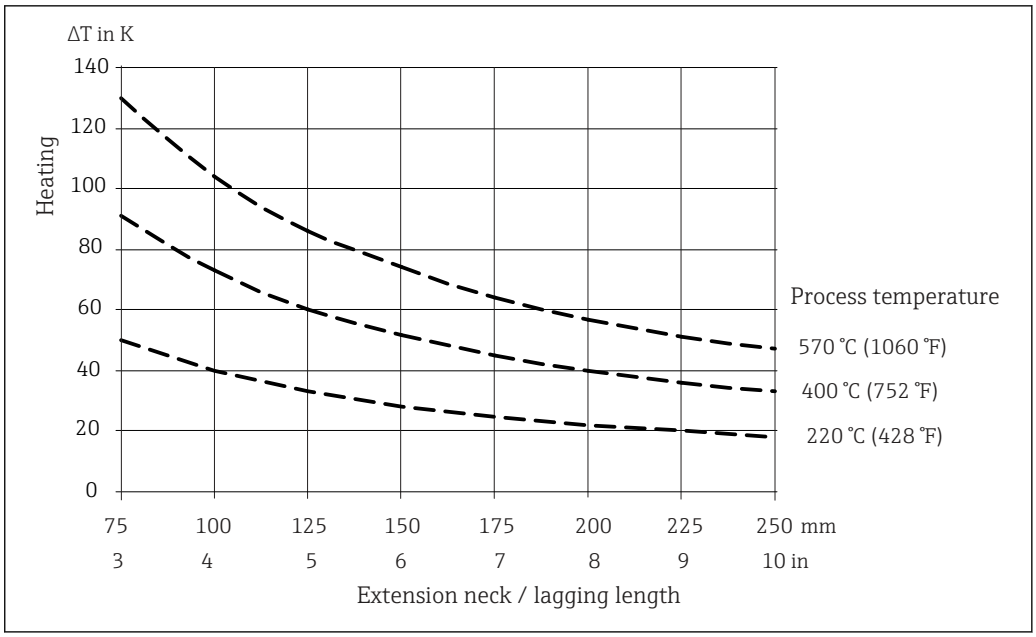

14 *Heating of the terminal head as a function of the process temperature. Temperature in terminal head = ambient temperature 20 °C (68 °F)+ ΔT*

The diagram can be used to calculate the transmitter temperature.

Example: At a process temperature of 220 °C (428 °F) and with a total lagging and extension neck length (T+ E) of 100 mm (3.94 in), the heat conduction is 40 K (72 °F). The determined transmitter temperature is less than 85 °C(maximum ambient temperature for iTEMP temperature transmitter).

Result: The temperature of the iTEMP transmitter is OK, the length of the lagging is sufficient.

Weight

0.5 to 2.5 kg (1 to 5.5 lbs) for standard versions.

Materials

The temperatures for continuous operation specified in the following table are only intended as reference values for use of the various materials in air and without any significant compressive load. The maximum operating temperatures can be reduced considerably in cases where abnormal conditions such as high mechanical load occur or in aggressive media.

Please note that the maximum temperature always also depends on the temperature sensor used.

Material name	Short form	Recommended max. temperature for continuous use in air	Properties
AISI 316/1.4401	X5CrNiMo 17-12-2	650 °C (1 202 °F) [1]	▪ Austenitic stainless steel ▪ High corrosion resistance in general ▪ Particularly high corrosion resistance in chlorinated and acidic, non-oxidizing atmospheres through the addition of molybdenum (e.g. phosphoric and sulfuric acids, acetic and tartaric acids with a low concentration)
Alloy 600/2.4816	NiCr15Fe	1 100 °C (2 012 °F)	▪ A nickel/chromium alloy with very good resistance to aggressive, oxidizing and reducing atmospheres, even at high temperatures ▪ Resistance to corrosion caused by chlorine gases and chlorinated media as well as many oxidizing mineral and organic acids, sea water etc. ▪ Corrosion from ultrapure water ▪ Not to be used in sulfur-containing atmospheres

1) Can be used to a limited extent up to 800 °C (1472 °F) for low mechanical loads and in non-corrosive media. Contact the manufacturer's sales department for further information.

Process connections

Threaded process connection

Type	Type of fitting	Dimensions		Technical properties
		Thread length TL in mm (in)	Width across flats AF	
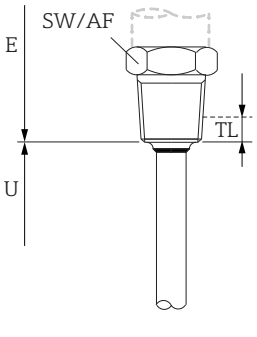 15 *Conical version*	½" NPT ¾" NPT	8 mm (0.32 in) 8.5 mm (0.33 in)	22 27	▪ $P_{max.}$ = 75 bar (1 088 psi) to +200 °C (+392 °F) for standard thin film and iTHERM QuickSens Pt100 sensors. ▪ $P_{max.}$ = 50 bar (725 psi) to +400 °C (+752 °F) for all other sensor types. [1]

1) The insert type is the deciding factor here and not the process connection thread.

The 316L compression fittings can only be used once due to deformation. This applies to all the components of the compression fittings! A replacement compression fitting must be secured at another point (grooves in thermowell). PEEK compression fittings must never be used at a temperature that is lower than the temperature present when the compression fitting is secured. This is because the fitting would no longer be leak-tight as a result of heat contraction of the PEEK material.

SWAGELOCK or similar fittings are strongly recommended for higher requirements.

Compression fitting	Type of fitting	Dimensions		Technical properties
		Ø di	Width across flats	
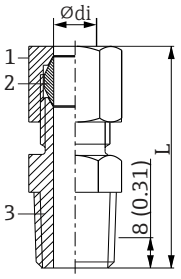 *1 Nut* *2 Ferrule* *3 Process connection*	NPT ½", NPT ¾" L = approx. 52 mm (2.05 in) Ferrule material PEEK or 316L Tightening torque: ▪ 10 Nm (PEEK) ▪ 25 Nm (316L)	3.175 mm (⅛ in) 6.35 mm (¼ in) 3 mm (0.12 in)	NPT ½" : 22 mm (0.87 in) NPT ¾" : 27 mm (1.06 in)	▪ $P_{max.}$ = 5 bar (72.5 psi), at T = +180 °C (+356 °F) for PEEK material ▪ $P_{max.}$ = 40 bar (104 psi) at T = +200 °C (+392 °F) for 316L material ▪ $P_{max.}$ = 25 bar (77 psi) at T = +400 °C (+752 °F) for 316L material
Spring-loaded version				
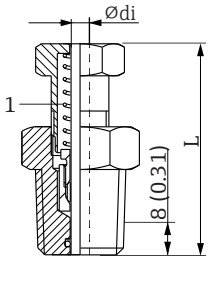 *1 Spring*	NPT ½", NPT ¾", spring-loaded L = approx. 60 mm (2.36 in)	3.175 mm (⅛ in) 6.35 mm (¼ in) 3 mm (0.12 in)	NPT ½" : 22 mm (0.87 in) NPT ¾" : 27 mm (1.06 in)	It is not pressure tight. Only to be used in combination with thermowell or in medium air. Tightening torque: ▪ NPT ½": 55 Nm ▪ NPT ¾": 55 Nm

Inserts

Sensor type RTD [1]	Pt100 (TF), basic thin film	Pt100 (TF), standard thin film	Pt100 (TF), iTHERM StrongSens	Pt100 (TF), iTHERM QuickSens [2]	Pt100 (WW), wire-wound	
Sensor design; connection method	1x Pt100, 3- or 4-wire	1x Pt100, 3- or 4-wire, mineral-insulated	1x Pt100, 3- or 4-wire, mineral-insulated	1x Pt100, 3- or 4-wire ▪ ø6 mm (0.24 in), mineral-insulated ▪ ø3 mm (0.12 in), Teflon-insulated	1x Pt100, 3- or 4-wire, mineral-insulated	2x Pt100, 3-wire, mineral-insulated
Vibration resistance of the insert tip	≤ 3g	≤ 4g	Increased vibration resistance 60 g	▪ ø3 mm (0.12 in) ≤ 3g ▪ ø6 mm (0.24 in) ≤ 60g	≤ 3g	
Measuring range; accuracy class	−50 to +200 °C (−58 to +392 °F), Class A or AA	−50 to +400 °C (−58 to +752 °F), Class A or AA	−50 to +500 °C (−58 to +932 °F), Class A or AA	−50 to +200 °C (−58 to +392 °F), Class A or AA	−200 to +600 °C (−328 to +1 112 °F), Class A or AA	

1) Options depend on product and configuration
2) Recommended for immersion lengths U < 70 mm (2.76 in)

Sensor type TC [1]	Type K	Type J	Type N
Sensor design	Mineral-insulated, with Alloy600 sheathed cable	Mineral-insulated, stainless steel sheathed cable	Mineral-insulated, with Alloy600 sheathed cable
Vibration resistance of the insert tip	≤ 3g		
Measuring range	−40 to +1 100 °C (−40 to +2 012 °F)	−40 to +750 °C (−40 to +1 382 °F)	−40 to +1 100 °C (−40 to +2 012 °F)
Connection type	Grounded or ungrounded		
Temperature-sensitive length	Insert length		

1) Options depend on product and configuration

Product spare parts that are currently available can be found online at:
http://www.products.endress.com/spareparts_consumables.
- Select the appropriate product root.
- Always quote the serial number of the device when ordering spare parts.

The insertion length IL is automatically calculated using the serial number.

Surface roughness

Values for wetted surfaces:

Standard surface	R_a ≤ 1.6 µm (0.06 µin)

Terminal heads

All terminal heads have an internal shape and size in accordance with DIN EN 50446, flat face, and a thermometer connection with a M24x1.5 or ½" NPT thread. All dimensions in mm (in). The sample cable glands in the diagrams correspond to M20x1.5 connections with non-Ex polyamide cable glands. Specifications without head transmitter installed. For ambient temperatures with head transmitter installed, see the "Environment" section.

As a special feature, Endress+Hauser offers terminal heads with optimized terminal accessibility for easy installation and maintenance.

TA20AB	Specification
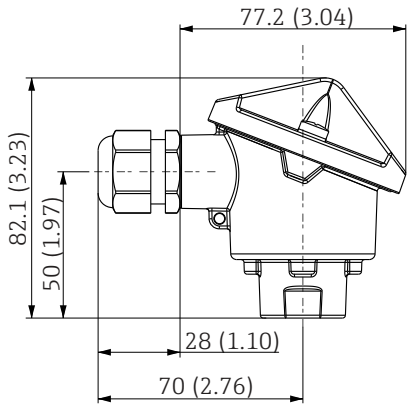	▪ Protection class: IP 66/68, NEMA 4x ▪ Temperature: −40 to +100 °C (−40 to +212 °F), polyamide cable gland ▪ Material: aluminum; polyester powder coated Seals: silicone ▪ Threaded cable entry: NPT ½" and M20x1.5 ▪ Color: blue, RAL 5012 ▪ Weight: approx. 300 g (10.6 oz)

TA30A	Specification
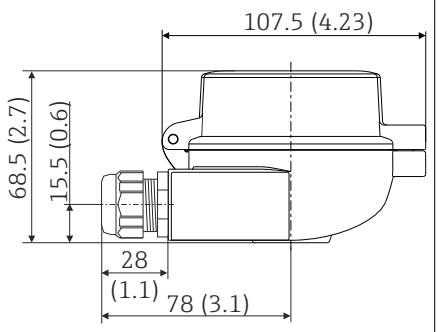	▪ Protection degree: ▪ IP66/68 (NEMA Type 4x encl.) ▪ For ATEX: IP66/67 ▪ Temperature: −50 to +150 °C (−58 to +302 °F) without cable gland ▪ Material: aluminum, polyester powder coated Seals: silicone ▪ Threaded cable entry: G ½", NPT ½" and M20x1.5; ▪ Head color: blue, RAL 5012 ▪ Cap color: gray, RAL 7035 ▪ Weight: 330 g (11.64 oz) ▪ Ground terminal, internal and external ▪ Available with sensors with 3-A® symbol

TA30A with display window in cover	Specification
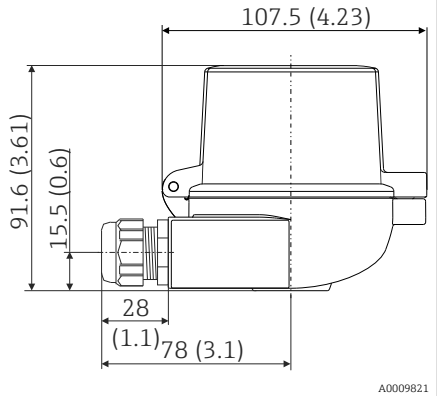	▪ Protection degree: ▪ IP66/68 (NEMA Type 4x encl.) ▪ For ATEX: IP66/67 ▪ Temperature: −50 to +150 °C (−58 to +302 °F) without cable gland ▪ Material: aluminum, polyester powder coated Seals: silicone ▪ Threaded cable entry: G ½", NPT ½" and M20x1.5 ▪ Head color: blue, RAL 5012 Cap color: gray, RAL 7035 ▪ Weight: 420 g (14.81 oz) ▪ Display window: single-pane safety glass according to DIN 8902 ▪ Display window in cover for head transmitter with TID10 display ▪ Ground terminal, internal and external ▪ Available with sensors with 3-A® symbol

TA30D	Specification
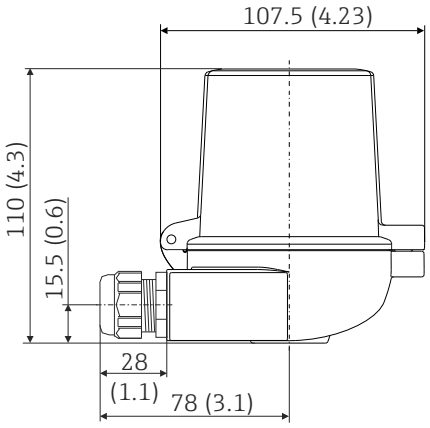	▪ Protection degree: ▪ IP66/68 (NEMA Type 4x encl.) ▪ For ATEX: IP66/67 ▪ Temperature: −50 to +150 °C (−58 to +302 °F) without cable gland ▪ Material: aluminum, polyester powder coated Seals: silicone ▪ Threaded cable entry: G ½", NPT ½" and M20x1.5 ▪ Two head transmitters can be mounted. In the standard configuration one transmitter is mounted in the terminal head cover and an additional terminal block is installed directly on the insert. ▪ Head color: blue, RAL 5012 ▪ Cap color: gray, RAL 7035 ▪ Weight: 390 g (13.75 oz) ▪ Ground terminal, internal and external ▪ Available with sensors with 3-A® symbol

TA30P	Specification
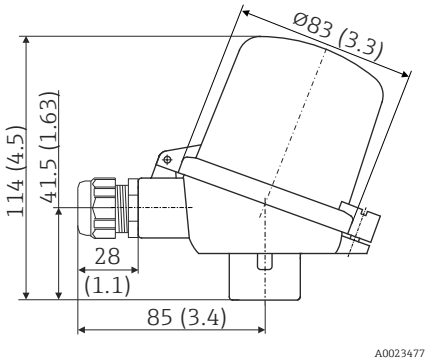	▪ Degree of protection: IP65 ▪ Max. temperature: −40 to +120 °C (−40 to +248 °F) ▪ Material: polyamide (PA12), antistatic Seals: silicone ▪ Threaded cable entry: M20x1.5 ▪ Two head transmitters can be mounted. In the standard version, one transmitter is mounted in the terminal head cover and an additional terminal block is installed directly on the insert. ▪ Head and cap color: black ▪ Weight: 135 g (4.8 oz) ▪ Type of protection: intrinsic safety (G Ex ia) ▪ Ground terminal: only internal via auxiliary clamp ▪ Available with sensors with 3-A® symbol

TA30R (optionally with display window in cover)	Specification
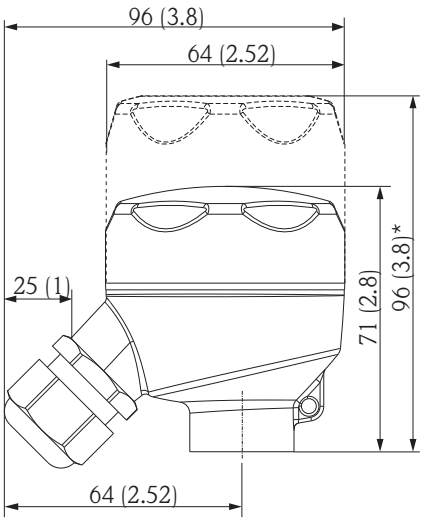 * Dimensions of version with display window in cover	▪ Degree of protection - standard version: IP69K (NEMA Type 4x encl.) Degree of protection - version with display window: IP66/68 (NEMA Type 4x encl.) ▪ Temperature: −50 to +130 °C (−58 to +266 °F) without cable gland ▪ Material: stainless steel 316L, abrasive-blasted or polished Seals: silicone, optional EPDM for applications free from paint-wetting impairment substances Display window: polycarbonate (PC) ▪ Cable entry thread NPT ½" and M20x1.5 ▪ Weight ▪ Standard version: 360 g (12.7 oz) ▪ Version with display window: 460 g (16.23 oz) ▪ Display window in cover optionally for head transmitter with display TID10 ▪ Ground terminal: internal as standard ▪ Available with sensors with 3-A® symbol ▪ Not allowed for Class II and III applications

TA30S	Specification
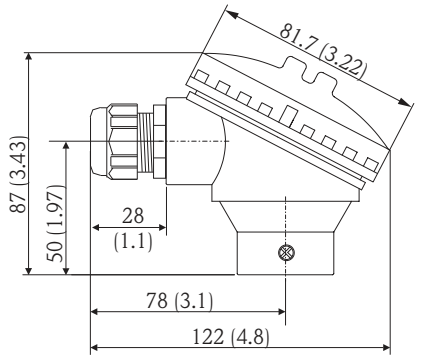	▪ Degree of protection: IP65 (NEMA Type 4x encl.) ▪ Temperature: −40 to +85 °C (−40 to +185 °F) without cable gland ▪ Material: polypropylene (PP), FDA-compliant, seals: O-ring EPDM ▪ Cable entry thread: ¾" NPT (with adapter for ½" NPT), M20x1.5 ▪ Protective assembly connection: ½" NPT ▪ Color: white ▪ Weight: approx. 100 g (3.5 oz) ▪ Ground terminal: only internal via auxiliary terminal ▪ Not allowed for Class II and III applications ▪ Available with 3-A marked sensors

TA30R (high version for two transmitters)	Specification
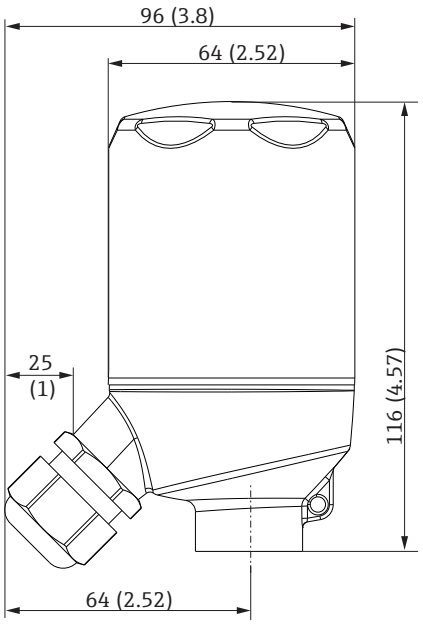	▪ Degree of protection: IP69K (NEMA Type 4x encl.) ▪ Temperature: −50 to +130 °C (−58 to +266 °F) without cable gland ▪ Material: stainless steel 316L, abrasive-blasted or polished Seals: EPDM ▪ Cable entry thread NPT ½" and M20x1.5 ▪ Weight: 460 g (16.23 oz) ▪ For two head transmitters ▪ Ground terminal: internal as standard ▪ Not allowed for Class II and III applications ▪ Available with 3-A marked sensors

TA30H with display window in cover	Specification
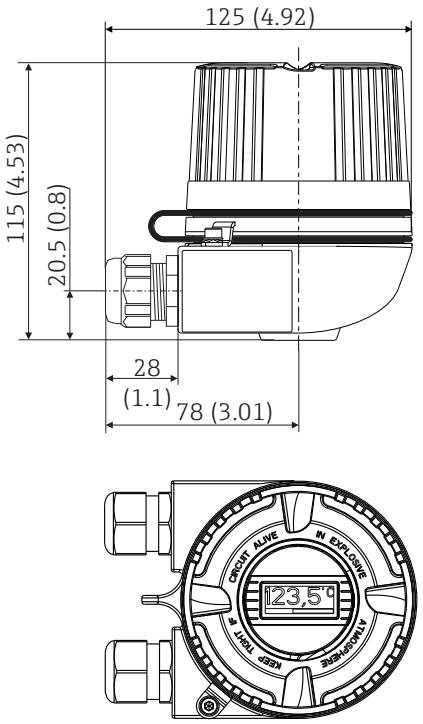	▪ Flameproof (XP) version, explosion-protected, captive screw cap, available with one or two cable entries ▪ Degree of protection: IP 66/68, NEMA Type 4x Encl. Ex-version: IP 66/67 ▪ Temperature: −50 to +150 °C (−58 to +302 °F) for rubber seal without cable gland (observe max. permitted temperature of cable gland!) ▪ Material: ▪ Aluminum; polyester powder coated ▪ Stainless steel 316L without coating ▪ Dry lubricant Klüber Syntheso Glep 1 ▪ Display window: single-pane safety glass according to DIN 8902 ▪ Thread: NPT ½", NPT ¾", M20x1.5, G½" ▪ Color of aluminum head: blue, RAL 5012 ▪ Color of aluminum cap: gray, RAL 7035 ▪ Weight: ▪ Aluminium approx. 860 g (30.33 oz) ▪ Stainless steel approx. 2 900 g (102.3 oz) ▪ Head transmitter optionally available with TID10 display When the housing cover is unscrewed: Before fastening, clean the threads in the cover and on the lower part of the housing and lubricate if necessary (recommended lubricant: Klüber Syntheso Glep 1)

TA30H	Specification
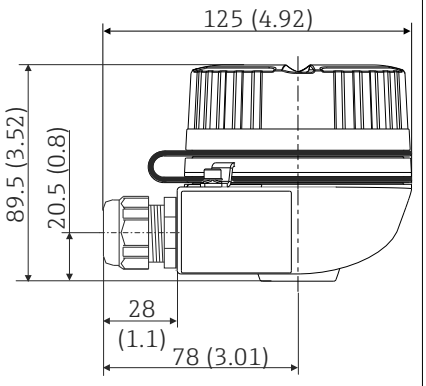	▪ Flameproof (XP) version, explosion-protected, captive screw cap, available with one or two cable entries ▪ Degree of protection: IP 66/68, NEMA Type 4x Encl. Ex-version: IP 66/67 ▪ Temperature: −50 to +150 °C (−58 to +302 °F) for rubber seal without cable gland (observe max. permitted temperature of cable gland!) ▪ Material: ▪ Aluminum, with polyester powder coating ▪ Stainless steel 316L without coating ▪ Dry lubricant Klüber Syntheso Glep 1 ▪ Thread: NPT ½", NPT ¾", M20x1.5, G½" ▪ Color of aluminum head: blue, RAL 5012 ▪ Color of aluminum cap: gray, RAL 7035 ▪ Weight: ▪ Aluminum: approx. 640 g (22.6 oz) ▪ Stainless steel: approx. 2 400 g (84.7 oz) When the housing cover is unscrewed: Before fastening, clean the threads in the cover and on the lower part of the housing and lubricate if necessary (recommended lubricant: Klüber Syntheso Glep 1)

TA30EB	Specification
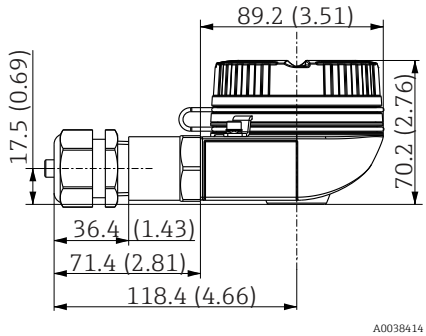	▪ Screw cap ▪ Degree of protection: IP 66/68, NEMA 4x ▪ Temperature: −50 to +150 °C (−58 to +302 °F) ▪ Material: aluminum; polyester powder coating; Klüber Syntheso Glep 1 dry-film lubricant ▪ Thread: M20x1.5 ▪ Head color: blue, RAL 5012 ▪ Cap color: gray, RAL 7035 ▪ Weight: approx. 400 g (14.11 oz) ▪ Ground terminal: internal and external When the housing cover is unscrewed: Before fastening, clean the threads in the cover and on the lower part of the housing and lubricate if necessary (recommended lubricant: Klüber Syntheso Glep 1)

TA30EB with display window in cover	Specification
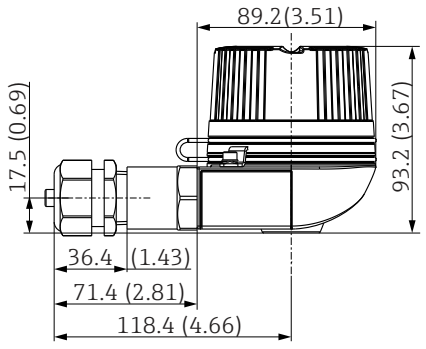	▪ Screw cap ▪ Degree of protection: IP 66/68, NEMA 4x Ex-version: IP 66/68 ▪ Temperature: −50 to +150 °C (−58 to +302 °F) for rubber seal without cable gland (observe max. permitted temperature of cable gland!) ▪ Material: aluminum; polyester powder coating; Klüber Syntheso Glep 1 dry-film lubricant ▪ Display window: single-pane safety glass according to DIN 8902 ▪ Thread: NPT ½", NPT ¾", M20x1.5, G½" ▪ Head color: blue, RAL 5012 ▪ Cap color: gray, RAL 7035 ▪ Weight: approx. 400 g (14.11 oz) When the housing cover is unscrewed: Before fastening, clean the threads in the cover and on the lower part of the housing and lubricate if necessary (recommended lubricant: Klüber Syntheso Glep 1)

Temperature field transmitter iTEMP TMT162	Specification
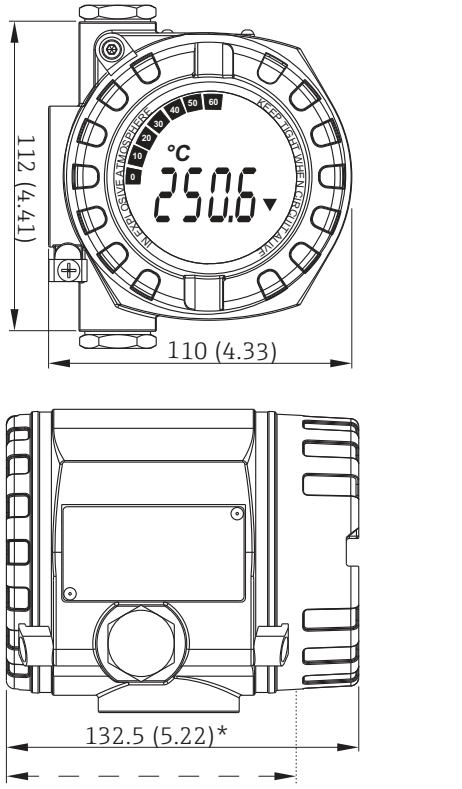 * Dimensions without display = 112 mm (4.41 in)	▪ Separate electronics compartment and connection compartment ▪ Protection class: IP66, 67, NEMA Type 4x ▪ Material: Die-cast aluminum housing AlSi10Mg with powder coating on polyester base or stainless steel 316L ▪ Display rotatable in 90° increments ▪ Cable entry: NPT ½" ▪ Bright backlit display with ease of visibility in bright sunshine or pitch darkness ▪ Gold plated terminals to avoid corrosion and additional measurement errors ▪ SIL certification as per IEC 61508:2010 (HART-protocol) ▪ Integrated overvoltage protection for the prevention of damage from overvoltage, optional The iTEMP TMT162 is installed as a terminal head in a vertical orientation, as shown in the picture opposite (thermometer facing downwards, cable connection facing upwards).

Temperature field transmitter iTEMP TMT142B	Specification
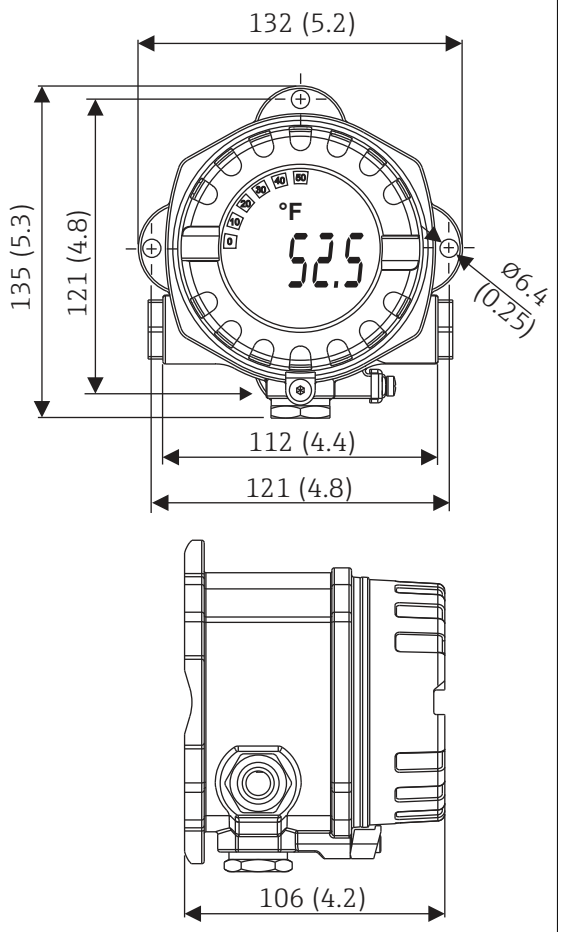	▪ Protection class: IP66/67, NEMA type 4x ▪ Material: Die-cast aluminum housing AlSi10Mg with powder coating on polyester base or stainless steel 316L ▪ Display rotatable in 90° increments ▪ Integrated Bluetooth® interface for wireless measured value display and parameter configuration, optional ▪ Bright backlit display with ease of visibility in bright sunshine or pitch darkness ▪ Gold plated terminals to avoid corrosion and additional measurement errors ▪ Integrated overvoltage protection for the prevention of damage from overvoltage, optional The iTEMP TMT142B is installed as a terminal head in a horizontal orientation as shown in the picture opposite (thermometer facing downwards, cable connection facing upwards).

Cable glands and connectors

Type	Suitable for cable entry	Degree of protection	Temperature range	Suitable cable diameter
Cable gland, polyamide	½" NPT, ¾" NPT, M20x1.5 (optionally 2x cable entry)	IP68	−40 to +100 °C (−40 to +212 °F)	5 to 9 mm (0.19 to 0.35 in)
	½" NPT, M20x1.5 (optionally 2x cable entry)	IP69K	−20 to +95 °C (−4 to +203 °F)	
Cable gland for dust ignition-proof area, polyamide	½" NPT, M20x1.5	IP68	−20 to +95 °C (−4 to +203 °F)	
Fieldbus connector (M12x1 PA, 7/8" PA, FF)	½" NPT, M20x1.5	IP67, NEMA Type 6	−40 to +105 °C (−40 to +221 °F)	-
Fieldbus connector (M12, 8-pin)	M20x1.5	IP67	−30 to +90 °C (−22 to +194 °F)	-
M12 plug, 4-pin, 316 (PROFIBUS® PA, Ethernet-APL™, IO-Link®	½" NPT, M20x1.5	IP67	−40 to +105 °C (−40 to +221 °F)	-

Certificates and approvals

Current certificates and approvals for the product are available at www.endress.com on the relevant product page:

1. Select the product using the filters and search field.
2. Open the product page.
3. Select **Downloads**.

Ordering information

Detailed ordering information is available from your nearest sales organization www.addresses.endress.com or in the Product Configurator at www.endress.com:

1. Select the product using the filters and search field.
2. Open the product page.
3. Select **Configuration**.

Product Configurator - the tool for individual product configuration

- Up-to-the-minute configuration data
- Depending on the device: direct input of information specific to the measuring point, such as the measuring range or operating language
- Automatic verification of exclusion criteria
- Automatic creation of the order code and its breakdown in PDF or Excel output format
- Ability to order directly in the Endress+Hauser Online Shop

Accessories

The accessories currently available for the product can be selected at www.endress.com:

1. Select the product using the filters and search field.
2. Open the product page.
3. Select **Spare parts & Accessories**.

Service-specific accessories

DeviceCare SFE100
DeviceCare is an Endress+Hauser configuration tool for field devices using the following communication protocols: HART, PROFIBUS DP/PA, FOUNDATION Fieldbus, IO/Link, Modbus, CDI and Endress+Hauser Common Data Interfaces.

Technical Information TI01134S

www.endress.com/sfe100

FieldCare SFE500
FieldCare is a configuration tool for Endress+Hauser and third-party field devices based on DTM technology.
The following communication protocols are supported: HART, WirelessHART, PROFIBUS, FOUNDATION Fieldbus, Modbus, IO-Link, EtherNet/IP, PROFINET and PROFINET APL.

Technical Information TI00028S

www.endress.com/sfe500

Netilion
With the Netilion IIoT ecosystem, Endress+Hauser enables the optimization of plant performance, digitization of workflows, sharing of knowledge and improved collaboration. Drawing upon decades of experience in process automation, Endress+Hauser offers the process industry an IIoT ecosystem designed to effortlessly extract insights from data. These insights allow process optimization, leading to increased plant availability, efficiency, reliability and ultimately a more profitable plant.

www.netilion.endress.com

SmartBlue app
SmartBlue from Endress+Hauser allows easy wireless field device configuration via Bluetooth® or WLAN. By providing mobile access to diagnostic and process information, SmartBlue saves time, even in hazardous and difficult-to-access environments.



16 *QR code for free Endress+Hauser SmartBlue app*

Online tools

Product information over the entire life cycle of the device: www.endress.com/onlinetools

System components

Surge arrester modules from the HAW product family

Surge arrester modules for DIN rail and field device mounting, for the protection of plants and measuring instruments with power supply and signal/communication lines.

More detailed information: www.endress.com

Process indicators from the RIA product family

Easily readable process indicators with various functions: loop-powered indicators for displaying 4 to 20 mAvalues, display of up to four HART variables, process indicators with control units, limit value monitoring, sensor power supply, and galvanic isolation.

Universal application thanks to international hazardous area approvals, suitable for panel mounting or field installation..

For more information, please refer to: www.endress.com

RN series active barrier

Single- or two-channel active barrier for safe separation of 0/4 to 20 mA standard signal circuits with bidirectional HART transmission. In the signal duplicator option, the input signal is transmitted to two galvanically isolated outputs. The device has one active and one passive current input; the outputs can be operated actively or passively.

For more information, please refer to: www.endress.com

Documentation

The following types of documentation are available on the product pages and in the Download Area of the Endress+Hauser website (www.endress.com/downloads) (depending on the selected device version):

Document	Purpose and content of the document
Technical Information (TI)	**Planning aid for your device** The document contains all the technical data on the device and provides an overview of the accessories and other products that can be ordered for the device.
Brief Operating Instructions (KA)	**Guide that takes you quickly to the 1st measured value** The Brief Operating Instructions contain all the essential information from incoming acceptance to initial commissioning.

Document	Purpose and content of the document
Operating Instructions (BA)	**Your reference document** The Operating Instructions contain all the information that is required in various phases of the life cycle of the device: from product identification, incoming acceptance and storage, to mounting, connection, operation and commissioning through to troubleshooting, maintenance and disposal.
Safety instructions (XA)	Safety Instructions (XA) are supplied with the device, depending on the approval. These are an integral part of the Operating Instructions. The nameplate indicates which Safety Instructions (XA) apply to the device.



www.addresses.endress.com

Endress+Hauser

People for Process Automation