TI01882D/06/EN/01.26-00
71769370
2026-09-01

Technical Information
Teqwave H

Ultrasonic concentration meter



Measuring instrument with first-rate hygienic design – plug and play for food and beverage processes

Field of application

- The acoustic waveguide measures precisely and reliably; even the smallest changes are detected
- Continuous quality testing of beverages and in cleaning processes

Device properties

- DN 25 to 100 (1" to 4") or tank installation
- Hygienic sensor, stainless steel (3-A, EHEDG)
- Robust measurement – no interference from bubbles/ particles
- Installation via DIN rail, pipe or wall mounting
- 3.5" TFT color touchscreen
- 4–20 mA, Modbus TCP

Your benefits

- High accuracy + repeatability – enables the creation of product-specific recipes
- Fulfilling hygienic requirements – easy-to-clean design suitable for in-process cleaning (CIP/SIP)
- Full transparency – constant monitoring of product quality without sampling
- Highest process safety – reliable measurement with a robust, maintenance-free sensor
- Local data backup – integrated measured value memory
- Simplified process control – user-friendly operation and clear status visualization

Endress+Hauser
People for Process Automation

Table of contents

About this document 3
Electrical symbols 3
Symbols for certain types of information 3
Symbols in graphics 3

Function and system design 4
Measuring principle 4
Measuring system 5
IT security 7

Input 7
Measured variables 7
Measuring ranges 8
Input signal 10

Output 10
Output signal 10
Failure signal 11
Galvanic isolation 13
Protocol-specific data 13

Power supply 13
Terminal assignment 13
Supply voltage 13
Power consumption 13
Current consumption 13
Power supply failure 13
Electrical connection 14
Potential equalization 17
Terminals 17
Cable entries 17
Cable specifications 17

Performance characteristics 18
Reference operating conditions 18
Maximum measurement error 18
Repeatability 18
Accuracy 18
Temperature measurement response time 19
Influence of variations in the medium temperature 19
Influence of vibrations 19
Influence of ambient temperature 19
Influence of gas bubbles 19

Installation 19
Installation location 19
Orientation 21
Process connections 21
Inlet and outlet runs 22
Mounting the transmitter housing 22
Special installation instructions 23

Environment 23
Ambient temperature range 23
Storage temperature 23
Degree of protection 23
Relative humidity 23
Operating altitude 23
Electromagnetic compatibility (EMC) 23

Process 23
Medium temperature range 23
Temperature increase 24
Nominal pressure 24
Internal cleaning 24
Flow velocity 24

Mechanical construction 24
Dimensions in SI units 24
Dimensions in US units 31
Weight 37
Materials 38
Process connections 39
Surface roughness 39

Operability 39
Local operation 39
Supported operating tools 39
Reliable operation 39
Languages 39

Certificates and approvals 40
CE mark 40
UKCA marking 40
Pressure Equipment Directive 40
Sanitary compatibility 40
Other certificates 41
External standards and guidelines 41

Ordering information 41

Accessories 41
Device-specific accessories 41
Service-specific accessories 43

Documentation 43
Standard documentation 43
Supplementary device-dependent documentation 43

Registered trademarks 44

About this document

Electrical symbols

Symbol	Meaning
	Direct current
	Alternating current
	Direct current and alternating current
	**Ground connection** A grounded terminal which, as far as the operator is concerned, is grounded via a grounding system.
	**Protective earth (PE)** Ground terminals that must be connected to ground prior to establishing any other connections. The ground terminals are located on the interior and exterior of the device: ▪ Interior ground terminal: protective earth is connected to the mains supply. ▪ Exterior ground terminal: device is connected to the plant grounding system.

Symbols for certain types of information

Symbol	Meaning
	**Permitted** Procedures, processes or actions that are permitted.
	**Preferred** Procedures, processes or actions that are preferred.
	**Forbidden** Procedures, processes or actions that are forbidden.
	**Tip** Indicates additional information.
	Reference to documentation
	Reference to page
	Reference to graphic
	Visual inspection

Symbols in graphics

Symbol	Meaning
1, 2, 3, ...	Item numbers
1., 2., 3., ...	Series of steps
A, B, C, ...	Views
A-A, B-B, C-C, ...	Sections
	Hazardous area
	Safe area (non-hazardous area)
	Flow direction

Function and system design

Measuring principle

Mode of operation

The measuring instrument is based on a patented ultrasonic technology that enables the precise and rapid measurement of concentrations of liquids.

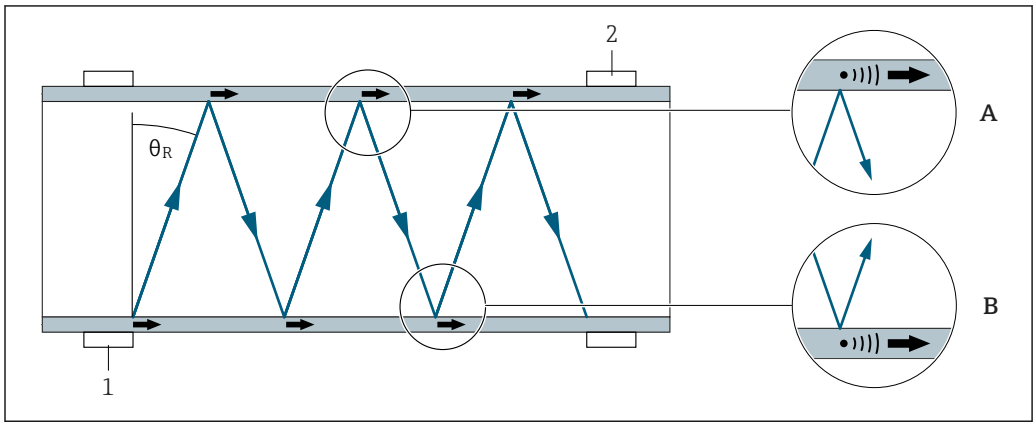

A piezoelectric signal transducer (1) continuously stimulates high-frequency sound waves, which then propagate in the wall of the sensor (A and B). A second piezoelectric signal transducer (2) acts as the receiver. During the measurement process, the two signal transducers operate alternately as the transmitter and receiver.

If the sound waves come into contact with liquid, the waves disperse into the liquid. The angle of dispersion of the sound wave (Θ_R) depends on the relationship between the speed of sound, the type of sound wave and the liquid.

The double transducer arrangement with one signal transducer acting as a transmitter and another as a receiver enables the extremely accurate analysis of the transmission times and amplitudes of the sound waves.

During this process, the measuring instrument also determines the acoustic impedance and the acoustic density of the liquid, in addition to the speed of sound. Another integrated sensor also measures the temperature.

Determination of the measured variables

Speed of sound

The measuring instrument determines the speed of sound using the propagation of the sound waves in the wave guide.

Temperature

A temperature sensor measures the temperature of the liquid. Due to its position and the good thermal conduction, the sensor also reliably detects fast changes in temperature. The measuring instrument displays the temperature as a separate measured variable. This measured variable is also used for concentration measurement.

Dispersion

The dispersion measurement is used as a quality indicator for the concentration measurement. The dispersion is displayed as a standardized factor that makes disturbances in the liquid such as gas bubbles or solid particles visible. A dispersion value < 1 indicates that the influences caused by the process by the process are sufficiently low and that reliable and accurate concentration is ensured. To determine the factor, the group and phase speed of sound of the liquid is measured.

Delta cF H2O (deviation of the speed of sound in relation to the speed of sound of water)

The measuring instrument displays the deviation of the speed of sound measured in the liquid compared to the speed of sound of water at an identical temperature in m/s. The speed of sound of water is saved as a reference (source: Marczak).

This analysis parameter can be used for early detection of impurities or leaks in water as well as for monitoring the reflushing phase in the context of CIP cleaning. A critical threshold can be defined.

Density (acoustic density)

The measuring instrument calculates the acoustic density of the liquid via the speed of sound and the acoustic impedance. In aqueous and undisturbed media, the acoustic density corresponds to the physical density. However, the measured value can be affected by the effects of viscosity and gas bubbles or particles.

Concentration and other analysis parameters

From the measured speed of sound and the temperature, the measuring instrument calculates the concentration as well as other analysis parameters, e.g. the ratio of concentrations in liquid mixtures.

Measuring system

The measuring instrument consists of a sensor and a transmitter. The sensor transmits the measured signals to the transmitter, which has an integrated measured value display. The transmitter transmits the measured values to the "Teqwave Viewer" operating tool via an Ethernet interface and the operating tool visualizes the measured values. In addition, an automation system can read out the measured values via Modbus TCP or an analog output.

To measure the concentration, the measuring instrument uses fluid profiles, which are individually tailored to the measurement task. The fluid profiles can be ordered individually or grouped into applications.

Transmitter

Several transmitter versions are available.

Transmitter with aluminum housing 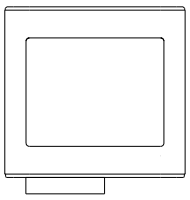 A0035712	Order code for "Transmitter housing", option A "Aluminum, anodized" Materials: ▪ Housing: Aluminum, anodized ▪ Window: Glass Display/operation: Touchscreen Degree of protection: IP40 Fastening: DIN rail DIN EN 60715 TH 35
Transmitter with stainless steel housing 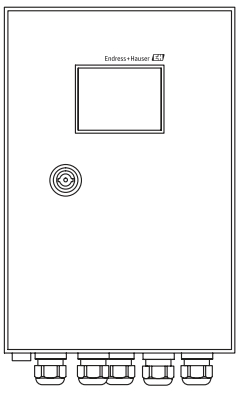 A0043171	Order code for "Transmitter housing", option B, "Stainless" Materials: ▪ Housing: Stainless steel 1.4301 (304) ▪ Window: Polycarbonate Display/operation: Touchscreen (can be operated once the housing cover is opened) Degree of protection: IP66 Fastening: Wall or post mounting

Sensor

Several sensor versions are available.

"Teqwave H" inline sensor 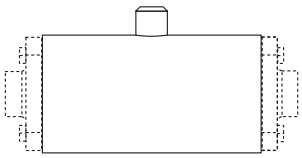 A0043235	Nominal diameters: ▪ DN25 (DIN) ▪ 1" (ANSI) Materials: ▪ Sensor: stainless steel, 1.4404 (316L) ▪ Process connections: stainless steel, 1.4404 (316L) ▪ Seals: EPDM, FKM or silicone Process connections: ▪ Welding nipple:EN 10357 series A, ASME BPE, ISO 2037 ▪ Clamp: DIN 32676 series A, Tri-Clamp ASME BPE, ISO 2852 ▪ Coupling: DIN 11851, DIN 11864-1A, SMS 1145 ▪ Flange: DIN 11864-2A Degree of protection: IP66/IP67 with cable connected
"Teqwave H" insertion sensor 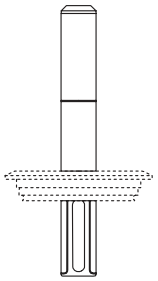 A0061920	Device versions: ▪ Insertion DN50 ▪ Insertion DN65–100 ▪ Tank 220 mm Materials: ▪ Sensor: stainless steel, 1.4404 (316L) ▪ Process connections: stainless steel, 1.4404 (316L) Process connections: ▪ Varivent N ▪ 2" Tri-Clamp ▪ External thread ISO 228, 1" ▪ DN50 DIN 11851 conical coupling union nut (dairy connection) Degree of protection: IP66/IP67 with cable connected

Fluid profiles

Endress+Hauser makes individually configured fluid profiles available for each fluid. A fluid profile contains the characteristics of the speed of sound in a defined temperature range. These values are needed to calculate the concentration of a liquid. Each fluid profile is uniquely identified by a five-digit number (#MA-xxxxx).

The data sheet belonging to a fluid profile contains information on the medium, analysis parameters, permitted measuring ranges, compensation values and accuracy of the concentration measurement.

When individual fluid profiles are ordered, they are pre-installed on the transmitter and can be used immediately. When ordering an application, only common fluid profiles are initially installed on the transmitter. All the ordered fluid profiles are always available via *Netilion*.

The order options available for fluid profiles and analysis parameters are listed in the "Application options" section (→ 🖹 7). More information, e.g. about measuring ranges, is available in the *Applicator*(→ 🖹 43) or from your *Endress+Hauser* sales organization.

Apart from the preconfigured fluid profiles which are available by default, Endress+Hauser also creates individual fluid profiles specifically for your application.

Your Endress+Hauser sales organization can provide detailed information on this service.

Application options

The measuring instrument offers application-specific options for selecting and ordering appropriate measured variables and fluid profiles.

Available options for the order code for "Application"

Order option	Description
Option **C** "Spirits; alcohol %vol	Select the C, D, E or F option to receive a package of several fluid profiles belonging to an application area. These packages combine fluid profiles for typical branches of industry (e.g. distilleries or soft drink manufacturers) and therefore facilitate the measurement of different analysis parameters. Fluid profiles and measuring ranges contained in the packages → 🖹 8.
Option **D** "Soft drinks; sugar °Brix"	
Option **E** "CIP cleaning; disinfection"	
Option **F** "Beer; extract °Plato"	
Option **H** "Speed of sound, temperature, dispersion (without concentration calculation)"	Select this option if only the actual measured values are required. These measured values allow users to determine the correlations of concentrations and measured values themselves.
Option **G** "Application as per medium-specific fluid profile number"	Select this option if an application-specific analysis parameter is required. The Applicator lists the available analysis parameters with the corresponding fluid profile numbers on → 🖹 43.

Operating tool

The "Teqwave Viewer" operating tool included in the delivery supports the following functions:
- Real-time display and graphic visualization of measured variables
- Saving graphs
- Management of fluid profiles and recipes on the transmitter
- Managing device configurations
- Switch between multiple transmitters
- Performing a self-test
- Reading out saved measured values
- Offline analysis with graphic visualization of measured values
- Logging and exporting measured data

IT security

The manufacturer warranty is valid only if the product is installed and used as described in the Operating Instructions. The product is equipped with security mechanisms to protect it against any inadvertent changes to the settings.

IT security measures, which provide additional protection for the product and associated data transfer, must be implemented by the operators themselves in line with their security standards.

Input

Measured variables

Measured variables

- Speed of sound
- Temperature
- Dispersion (relative indicator for disturbance)
- Delta cF H2O (deviation of the speed of sound compared to the speed of sound of demineralized water) (hidden by default)
- Density (acoustic density) (hidden by default)

Analysis parameters available for order

- Concentration
- Concentration ratio (ratio between two concentrations)

Measuring ranges

Speed of sound	600 to 2 000 m/s
Temperature	0 to 120 °C (32 to 248 °F)
Delta cF H2O	−450 to +450 m/s (−1 476 to +1 476 ft/s)
Acoustic density	0.7 to 1.5 g/cm³
Analysis parameter	According to the data sheet of the fluid profile

Order code for "Application", option C "Spirits; alcohol% vol"

Fluid profile name [1].	Analysis parameters	Measuring range	Temperature range
Pure alcohol	Alcohol concentration	36 to 99 % vol	2 to 35 °C (36 to 95 °F)
Pure alcohol	Alcohol concentration	36 to 99 % vol	30 to 60 °C (86 to 140 °F)
Liquor automatic invert sugar compensation [2]	Alcohol concentration	35 to 62 % vol	2 to 35 °C (36 to 95 °F)
Liquor automatic invert sugar compensation [2]	Alcohol concentration	35 to 62 % vol	30 to 60 °C (86 to 140 °F)
Liquor automatic invert sugar compensation [2]	Alcohol concentration	53 to 95 % vol	2 to 35 °C (36 to 95 °F)
Liquor automatic invert sugar compensation [2]	Alcohol concentration	53 to 95 % vol	30 to 60 °C (86 to 140 °F)
Liquor automatic sugar compensation	Alcohol concentration	35 to 62 % vol	2 to 35 °C (36 to 95 °F)
Liquor automatic sugar compensation	Alcohol concentration	35 to 62 % vol	30 to 60 °C (86 to 140 °F)
Liquor automatic sugar compensation	Alcohol concentration	53 to 95 % vol	2 to 35 °C (36 to 95 °F)
Liquor automatic sugar compensation	Alcohol concentration	53 to 95 % vol	30 to 60 °C (86 to 140 °F)

1) The name is on the data sheet and is shown on the local display and in the Viewer
2) The fluid profile is not installed by default. If necessary, it can be downloaded via Netilion and transferred to the transmitter with the "Teqwave Viewer" operating tool.

Order code for "Application", option D "Soft drinks; sugar Brix"

Fluid profile name [1].	Analysis parameters	Measuring range	Temperature range	Compensation values
Fruit Juice	°Brix as per ICUMSA SPS-4 (Table 5)	0 to 25 °Brix	2 to 35 °C (36 to 95 °F)	Acid (std. value 0)
Fruit Juice (Hot Filling), 0-25°Brix, 40-90°C	°Brix as per ICUMSA SPS-4 (Table 5)	0 to 25 °Brix	40 to 90 °C (104 to 194 °F)	Acid (std. value 0)
Fruit Juice Concentrate	°Brix as per ICUMSA SPS-4 (Table 5)	20 to 70 °Brix	2 to 35 °C (36 to 95 °F)	Acid (std. value 0)
Fruit Juice Concentrate (Hot Filling), 20-70°Brix, 40-90°C	°Brix as per ICUMSA SPS-4 (Table 5)	20 to 70 °Brix	40 to 90 °C (104 to 194 °F)	Acid (std. value 0)
Softdrink Light (Sucrose)	Sugar concentration	0 to 1.5 °Brix	2 to 35 °C (36 to 95 °F)	Acid, CO_2 (std. value 0)
Softdrink (Sucrose Syrup)	°Brix as per ICUMSA SPS-4 (Table 5)	0 to 25 % mas	2 to 35 °C (36 to 95 °F)	Acid, CO_2 (std. value 0)

Fluid profile name [1].	Analysis parameters	Measuring range	Temperature range	Compensation values
Softdrink (Invert Sugar Syrup)	°Brix as per ICUMSA SPS-4 (Table 5)	0 to 25 % mas	2 to 35 °C (36 to 95 °F)	Acid, CO_2 (std. value 0)
Syrup (Sucrose)	°Brix as per ICUMSA SPS-4 (Table 5)	20 to 70 % mas	2 to 35 °C (36 to 95 °F)	Acid (std. value 0)
Syrup (Invert Sugar)	°Brix as per ICUMSA SPS-4 (Table 5)	20 to 70 % mas	2 to 35 °C (36 to 95 °F)	Acid (std. value 0)
Invert Sugar [2]	%mas invert sugar as per ICUMSA SPS-4 (Table 8)	0 to 25 % mas	2 to 35 °C (36 to 95 °F)	Acid, CO_2 (std. value 0)
Invert Sugar (Hot Filling) [2]	%mas invert sugar as per ICUMSA SPS-4 (Table 8)	0 to 25 % mas	40 to 90 °C (104 to 194 °F)	Acid (std. value 0)
Invert Sugar Syrup/ Concentrate [2]	%mas invert sugar as per ICUMSA SPS-4 (Table 8)	20 to 70 °Brix	2 to 35 °C (36 to 95 °F)	Acid (std. value 0)
Invert Sugar Syrup/ Concentrate (Hot Filling) [2]	%mas invert sugar as per ICUMSA SPS-4 (Table 8)	20 to 70 °Brix	40 to 90 °C (104 to 194 °F)	Acid (std. value 0)
Softdrink (HFCS55)	°Brix Corn syrup HFCS55	0 to 25 % mas	2 to 35 °C (36 to 95 °F)	Acid, CO_2 (std. value 0)
Syrup (HFCS55)	°Brix Corn syrup HFCS55	20 to 70 % mas	2 to 35 °C (36 to 95 °F)	Acid (std. value 0)
Softdrink (HFCS55, Hot Filling)	°Brix Corn syrup HFCS55	0 to 25 % mas	40 to 90 °C (104 to 194 °F)	Acid (std. value 0)
Syrup (HFCS42)	°Brix Corn syrup HFCS42	20 to 70 % mas	2 to 35 °C (36 to 95 °F)	Acid (std. value 0)
Softdrink (HFCS55) [2]	%mas corn syrup HFCS55	0 to 25 % mas	2 to 35 °C (36 to 95 °F)	Acid, CO_2 (std. value 0)
Syrup (HFCS55) [2]	%mas corn syrup HFCS55	20 to 70 % mas	2 to 35 °C (36 to 95 °F)	Acid (std. value 0)
(HFCS55, Hot Filling) [2]	%mas corn syrup HFCS55	0 to 25 % mas	40 to 90 °C (104 to 194 °F)	Acid (std. value 0)
Syrup (HFCS42) [2]	%mas corn syrup HFCS42	20 to 70 % mas	2 to 35 °C (36 to 95 °F)	Acid (std. value 0)

1) The name is on the data sheet and is shown on the local display and in the Viewer
2) The fluid profile is not installed by default. If necessary, it can be downloaded via Netilion and transferred to the transmitter with the "Teqwave Viewer" operating tool.

Order code for "Application", option E "CIP cleaning; disinfection"

Fluid profile name	Analysis parameters	Measuring range	Temperature range
Sodium hydroxide	NaOH	0 to 4.5 % mas	15 to 89 °C (59 to 192 °F)
Potassium hydroxide	KOH	0 to 4.5 % mas	15 to 85 °C (59 to 185 °F)
Phosphoric acid	H3PO4	0 to 4.5 % mas	20 to 78 °C (68 to 172 °F)

Fluid profile name	Analysis parameters	Measuring range	Temperature range
Nitric acid	HNO3	0 to 3 % mas	20 to 80 °C (68 to 176 °F)
Sulfuric acid	H2SO4	0 to 3 % mas	10 to 45 °C (50 to 113 °F)
Hydrogen peroxide	H2O2	20 to 40 % mas	5 to 40 °C (41 to 104 °F)

Order code for "Application", option F "Beer; extract Plato"

Fluid profile name	Analysis parameters	Measuring range	Temperature range
Extract	Extract	0 to 30 °Plato	65 to 95 °C (149 to 203 °F)
Extract	Extract	0 to 30 °Plato	2 to 25 °C (36 to 77 °F)

Input signal

Digital input

Function	Select analog channel 1 to 4; The digital inputs "0" and "1" may only be connected to the signal ground.
Version	Open and ground digital input Do not connect external voltage to these terminals.

External measured values

To increase the measurement accuracy, the automation system can write a variety of compensation values to the measuring instrument:
- CO_2 concentration
- Acid content

The datasheet of the fluid profile and the Applicator contain detailed information about compensation options.

If it is not possible to read measured values into the measuring instrument using external sensors, the values can be saved as constant measured values.

Digital communication

The measured values are written by the automation system via Modbus TCP.

Output

Output signal

Ethernet (Modbus protocol)

Physical interface	RJ-45 (8P8C)

Current output 4 to 20 mA/voltage output 0 to 10 V

Function	Can be configured as a current output or voltage output, as required
Version	Galvanically isolated, protection class III as per IEC 61140
Open-circuit voltage	DC 15.5 V

Assignable functions	▪ Analysis parameter 1…n ▪ Speed of sound ▪ Temperature ▪ Dispersion ▪ Delta cF H2O (optional) ▪ Density (optional) ▪ Suspend measurement ▪ Deactivate analog output
Current output	4 to 20 mA
Maximum output value	20 mA
Load	0 to 500 Ω
Resolution	1.5 µA
Voltage output	0 to 10 V
Maximum output value	10 V
Load	> 750 Ω
Resolution	1 mV
Maximum cable length	30 m (90 ft)

Switch output

Function	Switch output
Version	Relay output, galvanically isolated
Maximum switching capacity	Ambient temperature 0 to 55 °C: 50 V_{DC} or 30 V_{AC}, 1 A Ambient temperature > 55 °C: 50 V_{DC} or 30 V_{AC}, 0.8 A
Switching behavior	▪ NC contact ▪ NO contact
Assignable functions	Limit value (can be configured as a range or threshold, as required): ▪ Analysis parameter 1…n ▪ Speed of sound ▪ Temperature ▪ Dispersion ▪ Delta cF H2O (optional) ▪ Density (optional)
Maximum cable length	30 m (90 ft)

Failure signal

Ethernet (Modbus protocol)

Status bit	Diagnostics information via status bits

Current output 4 to 20 mA / voltage output 0 to 10 V

Failure mode	The breakdown information to be displayed in the event of a breach of the measuring or calibration range (over-range/under-range) can be configured in the **Output settings** parameter: ▪ Failure value for measured variable if the "0 V/2 mA exceeding limits" option is selected:2 mA or 0 V ▪ Limit value for measured variable if the "Min/Max exceeding limits" option is selected: 4 to 20 mA or 0 to 10 V
	▪ The breakdown information to be displayed in the event of a breach of the calibration range (over-range/under-range) can be configured in the **Output settings** parameter: ▪ Failure value for measured variable if the "0 V/2 mA exceeding limits" option is selected: 2 mA or 0 V ▪ If the measuring instrument exceeds or drops below the calibration range for the temperature, a failure value is also displayed for the concentration or analysis parameter if this is active ▪ No failure value and normal output of the current measured value according to the set limits if the "Min/Max exceeding limits" option is selected ▪ The breakdown information to be displayed in the event of a breach of the calibration range (over-range/under-range) can be configured in the **View filter** parameter: Behavior according to the previously described setting in the **Output settings** parameter for the measured variable if "Calibration limits" is selected
	The breakdown information to be displayed in the event of a non-stationary process (stationarity) can be configured in the **View filter** parameter: Failure value for the concentration or analysis parameter if the **Enable stationarity** option is selected: 2 mA or 0 V
	The breakdown information to be displayed if the rate of change exceeds the limit value can be configured in the **Change in [measured variable]** parameter. If the function is enabled: Failure value for concentration or analysis parameter: 2 mA or 0 V
	In the event of process disturbances (dispersion) above the limit value: Failure value for concentration or analysis parameter: 2 mA or 0 V
	If there is not enough liquid or the sensor is faulty: Failure value for all measured variables: 2 mA or 0 V

Switch output

Failure mode	If the temperature measuring range is exceeded or undershot: For the concentration or analysis parameter: The current status is held.
	If the temperature calibration range is exceeded or undershot: For the concentration or analysis parameter: The current status is held.
	The breakdown information to be displayed in the event of a non-stationary process (stationarity) can be configured in the **View filter parameter**. If the "Enable stationarity" option is selected: For the concentration or analysis parameter: The current status is held.
	The breakdown information to be displayed if the rate of change exceeds the limit value can be configured in the **Change in [measured variable]** parameter. If the function is enabled: For the concentration or analysis parameter: The current status is held.
	In the event of process disturbances (dispersion) above the limit value: For the concentration or analysis parameter: The current status is held.
	If there is not enough liquid: Measured value for all measured variables with the exception of temperature: 0 switch status as per the setting for the switching threshold or switch point ("Operating Instructions" document, "Configuring the relay output" section).
	If the sensor is faulty: Measured value for all measured variables: 0 switch status as per the setting for the switching threshold or switch point ("Operating Instructions" document, "Configuring the relay output" section).

Local display

Color encoding	Color field indicates measurement and device error ("Operating Instructions" document, "Diagnostics information on local display and in operating tool" section)
Plain text display	Display alternates between information on the cause and the measured value display

"Teqwave Viewer" operating tool

Color encoding	Color field indicates measurement and device error ("Operating Instructions" document, "Diagnostics information on local display and in operating tool" section)
Plain text display	Information on the cause

Galvanic isolation

The current and relay outputs are galvanically isolated from the rest of the system.

Protocol-specific data

Protocol	Modbus Applications Protocol Specification V1.1
Response times	Typical 10 to 50 ms
Device type	Slave
Function codes	▪ 0x04: Read Input Registers ▪ 0x10: Write Multiple Registers
Modbus data transmission	Big-endian
Data access	Each measured variable can be accessed via Modbus TCP.

Power supply

Terminal assignment

Terminal	Assignment	Description
V+	**V_{in}** DC 24 V	Supply voltage
V-		
+	**out** 0 to 10 V; 4 to 20 mA	Analog output
-		
0	**output** selection	Digital input
1		
⊥		Digital input ground
—/—	**alarm** Max. 50 VDC/30 VAC, 1 A	Switch output
—/—		

Supply voltage

Transmitter	DC 19.2 to 28.8 V

The power unit must be tested to ensure it meets safety requirements (PELV).

Power consumption

Transmitter	4 W

Current consumption

Transmitter Maximum switch-on current	6 A

Power supply failure

The configuration and recorded data are retained in the device memory.

Electrical connection

Connections and connecting cable: Transmitter with aluminum housing

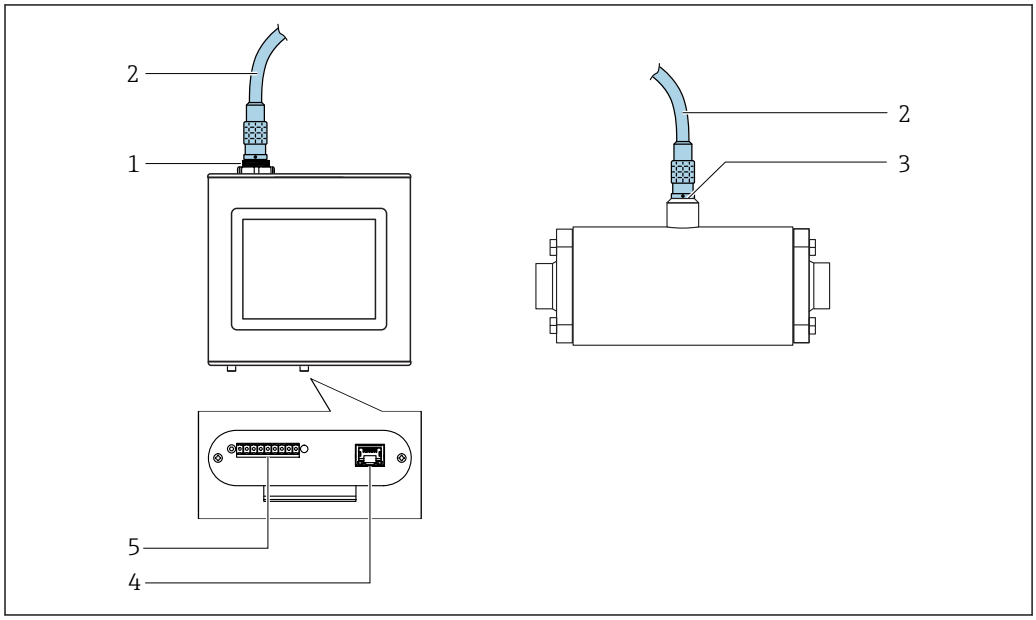

1 Connections and connecting cable: Transmitter with aluminum housing

1 *Push-pull connection, transmitter*
2 *Connecting cable*
3 *Push-pull or M12 connection, sensor*
4 *Ethernet interface for digital signal transmission ("Teqwave Viewer" operating tool and Modbus protocol)*
5 *Terminal strip with supply voltage, analog output, switch output and digital input, terminal assignment* → *13*

The connecting cable is available in the following lengths: 2 m (6 ft), 5 m (15 ft) and 10 m (30 ft).

Connections and connecting cable: Transmitter with stainless steel housing

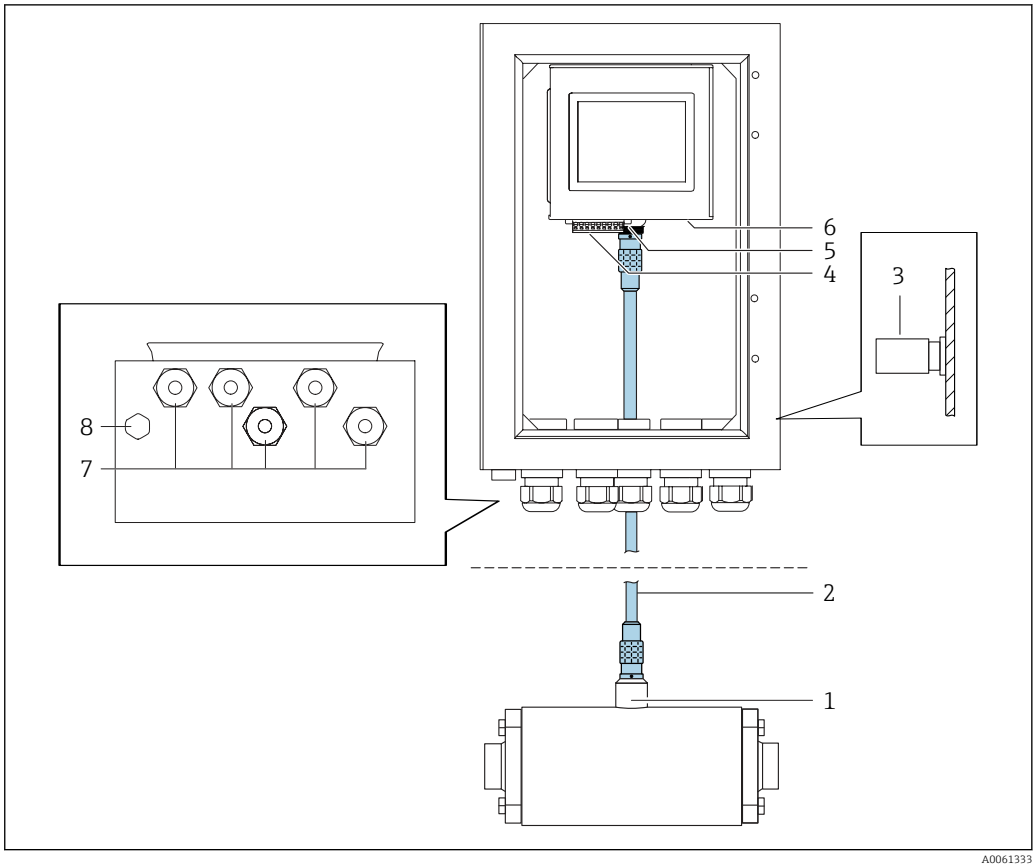

2 *Connections and connecting cable: Transmitter with stainless steel housing*

1 *Push-pull connection for sensor*
2 *Connecting cable*
3 *M6 bolt for protective ground connection*
4 *Terminal strip with supply voltage, analog output, switch output and digital input, terminal assignment* → 13
5 *Push-pull connection for transmitter*
6 *Ethernet interface for digital signal transmission ("Teqwave Viewer" operating tool and Modbus protocol)*
7 *M20 cable entries for terminal strip connection, push-pull connection for the transmitter and RJ45 Ethernet interface and protective grounding cable*
8 *Membrane for moisture compensation*

The connecting cable is available in the following lengths: 2 m (6 ft), 5 m (15 ft) and 10 m (30 ft).

Connection examples

Current output 4 to 20 mA (without HART)

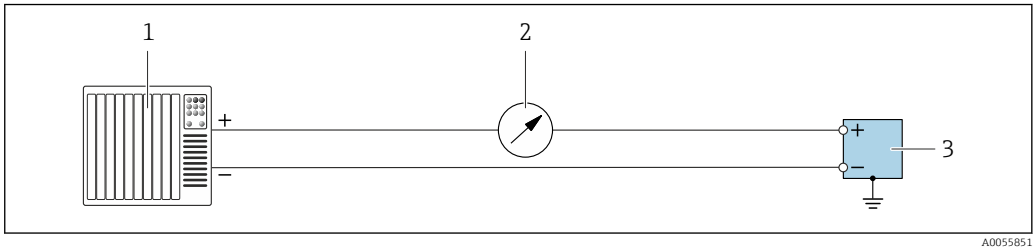

3 *Connection example for 4 to 20 mA current output (active)*

1 *Automation system with current input (e.g. PLC)*
2 *Optional additional display unit: Observe maximum load*
3 *Transmitter with current output (active)*

Voltage output 0 to 10 V

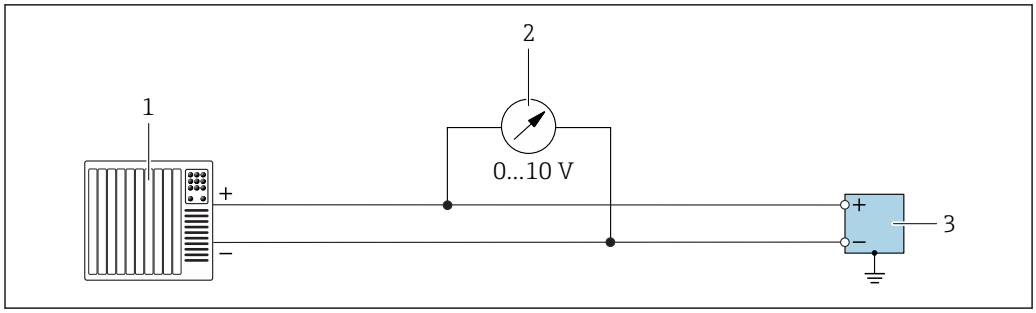

4 *Connection example for voltage output, active, 0 to 10 V*

1 *Automation system with voltage input (e.g. PLC)*
2 *Analog display unit for voltage: Observe minimum load*
3 *Transmitter with voltage output*

Relay output

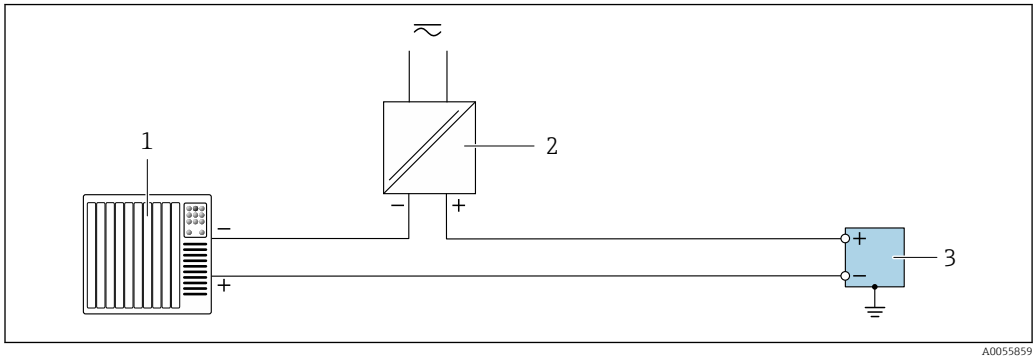

5 *Connection example for relay output*

1 *Automation system with switch input (e.g. PLC)*
2 *Power supply*
3 *Transmitter with relay output*

Digital input (elective inputs)

The digital input controls which measured variable is active at the analog output. A total of up to four measured variables can be configured.

Configuration options:

Active analog output	Digital input "0"	Digital input "1"
Channel 1	Open	Open
Channel 2	Ground (digital input ⊥)	Open
Channel 3	Open	Ground (digital input ⊥)
Channel 4	Ground (digital input ⊥)	Ground (digital input ⊥)

NOTICE

Interference at the digital input

If the measuring instrument is connected incorrectly, this can impact the functional integrity of the device.

► Switch the digital input only against the digital input ground (⊥).

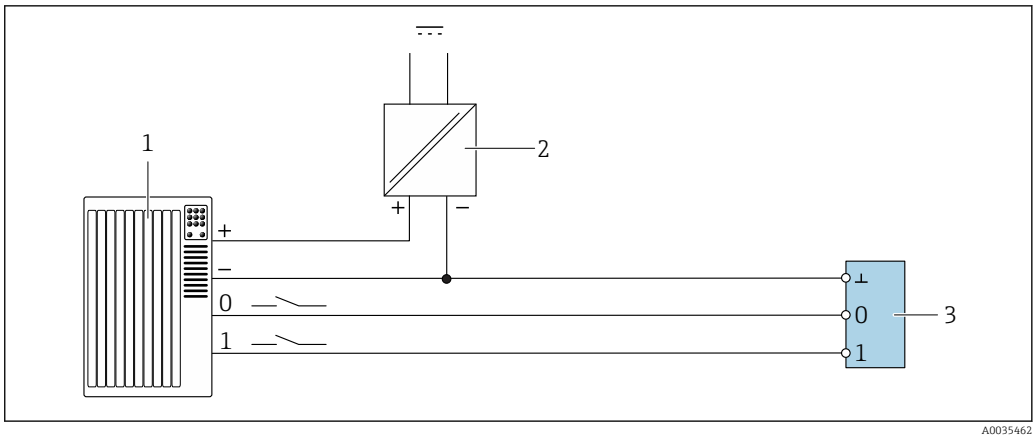

6 *Connection example for the digital input*

1 Automation system with switch output (e.g. PLC)
2 Power supply
3 Transmitter

If the transmitter is connected as illustrated in the example, the outputs are no longer galvanically isolated.

Potential equalization

The measuring instrument must be included in the potential equalization. The transmitter and sensor are connected to the same potential via the connecting cable. This potential must be current-free. Terminal assignment → 13.

In addition to the sensor housing, the terminal V- must also be grounded.

Terminals

Terminal type	Screw terminals
Conductor cross-section	0.129 to 1.31 mm² (16 to 26 AWG)

Cable entries

Transmitter with stainless steel housing	Cable glands ▪ M20 × 1.5 for cable dia 4 to 6.5 mm (0.16 to 0.25 in) ▪ M20 × 1.5 for cable dia 7 to 10 mm (0.28 to 0.39 in)

Cable specifications

Permitted temperature range

- The installation guidelines that apply in the country of installation must be observed.
- The cables must be suitable for the minimum and maximum temperatures to be expected.
- A temperature increase of up to +20K above the ambient temperature must be expected in stainless steel housings.

Sensor/transmitter connecting cable

Only use the cable supplied.

Protective ground for protective ground terminal

Transmitter with aluminum housing

Conductor cross-section	0.129 to 1.31 mm² (16 to 26 AWG)
Grounding impedance	< 2 Ω

Transmitter with stainless steel housing

Connection type	Via cable lug, suitable for M6 bolts
Grounding impedance	< 2 Ω
Cable diameter	4 to 6.5 mm (0.16 to 0.25 in)

Modbus Ethernet cable

Cable type	100 Base-TX
Cable category	Min. CAT5
Plug type	RJ-45 (8P8C)
Shielding	S/FTP, F/FTP, SF/FTP, S/UTP, F/UTP or SF/UTP
Cable length	Max. 30 m (98 ft)
Cable diameter	4 to 6.5 mm (0.16 to 0.25 in)

Power supply and signal cables

Cable type	Strand or solid wire
Conductor cross-section	0.129 to 1.31 mm^2 (16 to 26 AWG)
Cable length	Max. 30 m (98 ft)
Cable diameter	7 to 10 mm (0.28 to 0.39 in)
Power supply cable	Standard installation cable is sufficient.
Analog output	Standard installation cable is sufficient.
Digital input	Standard installation cable is sufficient.
Switch output (alarm)	Standard installation cable is sufficient.

Performance characteristics

Reference operating conditions

- Distilled water, degassed (demineralized water) constantly in the range of +15 to +30 °C (+59 to +86 °F)
- Atmospheric atmospheric pressure constantly in the range of 860 to 1060 mbar (12.47 to 15.37 psi)
- Data as indicated in the calibration certificate

Maximum measurement error

Under reference operating conditions:

Speed of sound	±0.3 m/s (±3.3 ft/s)
Temperature	±0.1 K
Density	±0.01 g/cm^3

Repeatability

Under reference operating conditions:

	Inline measuring instrument	Insertion measuring instrument
Speed of sound	±0.03 m/s (0.10 ft/s)	±0.02 m/s (0.07 ft/s)
Temperature	±0.065 K	±0.01 K
Density	±0.001 g/cm^3	±0.001 g/cm^3

Accuracy

Concentration measurement accuracy

The accuracy depends on the fluid profile. The data sheet for this and the Applicator (→ 43) contain detailed accuracy information.

Compensation of cross-interference
Depending on the fluid profile, various compensation values can be entered or read into the measuring instrument to compensate for known cross-interference. → 10.

Temperature measurement response time

T90 < 5 s

Influence of medium temperature
The response time of the temperature/concentration measurement depends on the transfer of heat from the fluid to the steel. The activation of the Kalman filter can lead to a shorter response time in the event of fast and large temperature changes.

Influence of variations in the medium temperature

If the medium temperature changes quickly (>1.5 °C/min (2.7 °F/min)), the measured error can be greater than specified in the "Maximum measured error" section.

Influence of vibrations

The measured error can be greater than specified in the "Maximum measured error" section as a result of mechanical, acoustic or electrical vibrations in the 0.8 to 2.0 MHz range. We recommend using a dedicated power unit and not the mains power supply.

Influence of ambient temperature

Current/voltage output

Temperature coefficient	100 µV/°C (µV/°F) or ±1 µA/°C (µA/°F)

Influence of gas bubbles

Gas bubbles and particles are disturbance factors when measuring with ultrasonic waves The recommended installation positions and the "Dispersion" diagnostic information largely prevent incorrect measurement results caused by gas bubbles or particles.

In the case of media with a high CO_2 content, there is the danger of CO_2 outgassing. To prevent outgassing, the process pressure must be set in such a way that the CO_2 saturation limit is not exceeded at the specific process temperature.

Installation

Installation location

- Install the sensor in an area that meets the following conditions:
  - Well-mixed medium
  - Bubble-free medium
  - Constantly heated medium, not close to heating coils
- Support the sensor in the event of severe dynamic load. Maximum lateral loading capacity: 75 Nm (55 lbf ft).
- Allow sufficient space for mounting and electrical connection.

Piping

- Preferably install the sensor in an ascending pipe, and ensure a sufficient distance to the next pipe elbow: h ≥ 5 x DN.
- Do not install the device at the highest point of the pipe.
- Do not install the device upstream from a free pipe outlet in a down pipe.

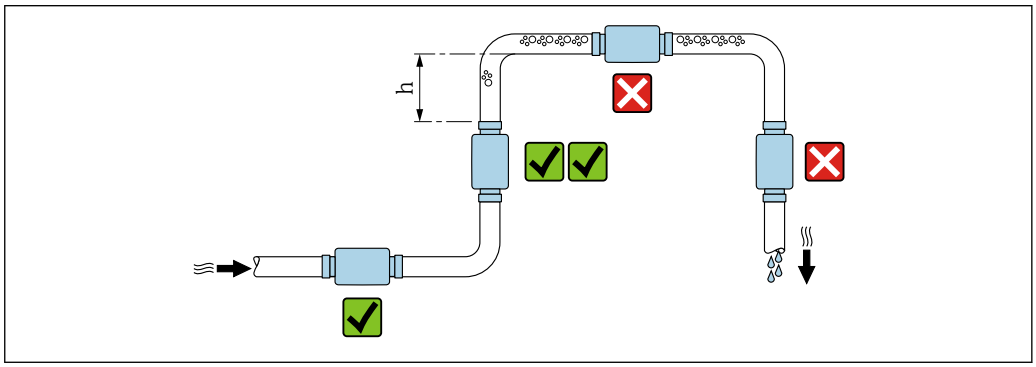

7 *Installation location, inline measuring instrument*

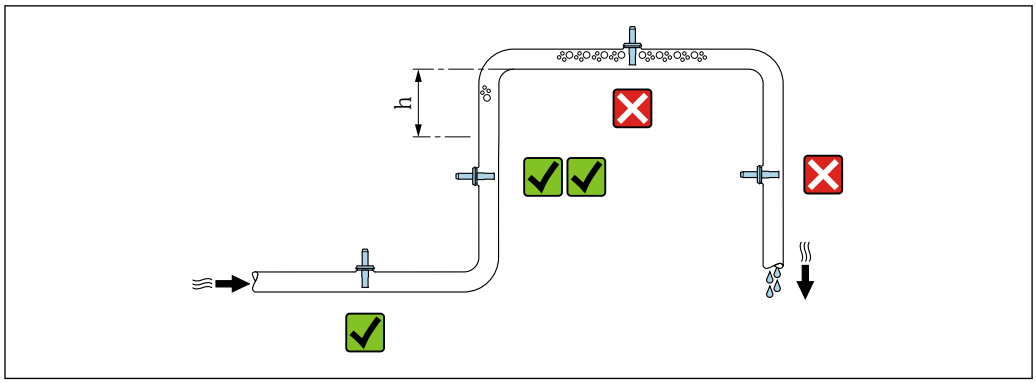

8 Installation location, insertion measuring instrument

Tank

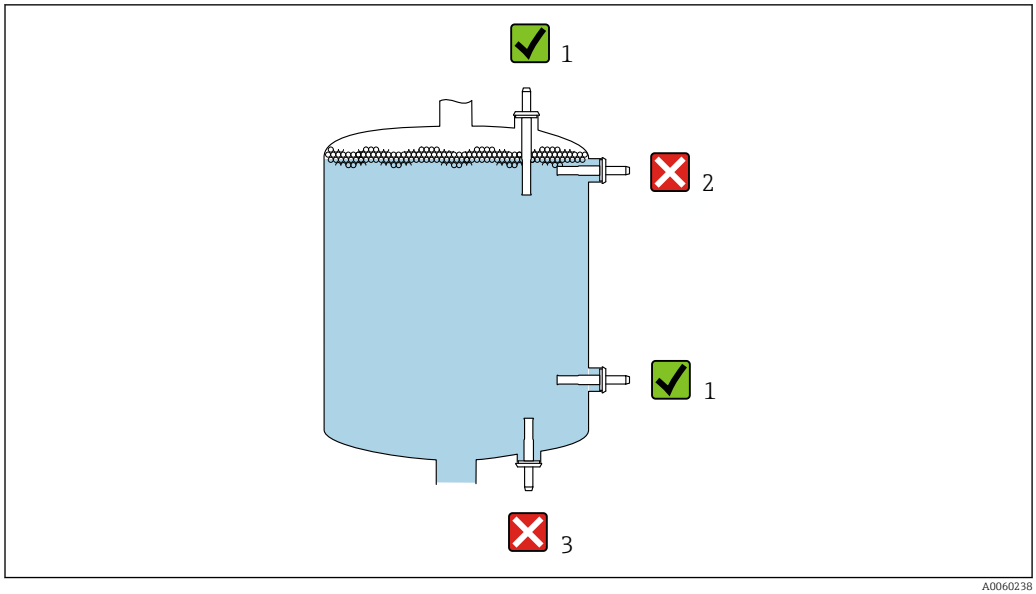

9 Tank installation location, insertion measuring instrument

1 Select the installation location such that the sensor opening is completely immersed in the medium.
2 Avoid the installation location at the filling limit, as this can lead to increased bubble formation.
3 Avoid the installation location at the tank bottom in hygienic applications or if sedimentation is to be expected.

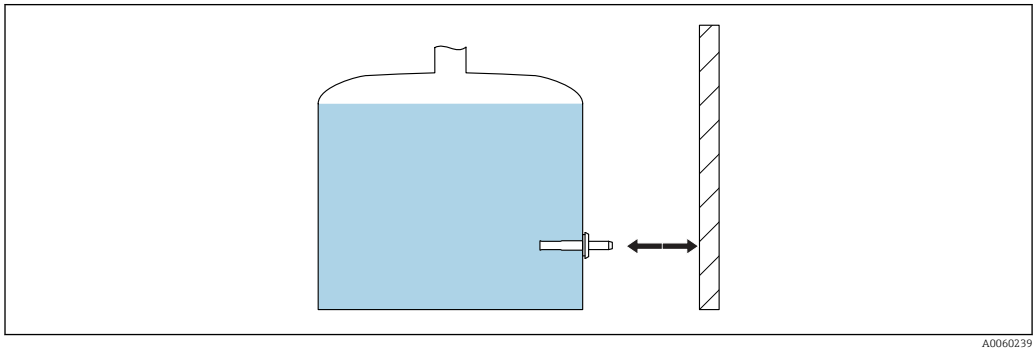

10 Take into consideration the spacing, insertion measuring instrument

Orientation

NOTICE

Self-drainability must be ensured for hygienic applications and applications with sediment formation.

- ▶ Select the installation position and angle so that, during draining, the medium can drain completely by gravity and no residue remains on the sensor.

For the insertion sensor in tanks: To ensure hygienic installation, position the sensor such that all surfaces are directly reachable by spray from a cleaning device.

Orientation			
	Inline sensor	**Insertion sensor, pipe installation**	**Insertion sensor, tank installation**
Vertical orientation	✓✓ 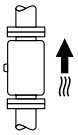 A0060225	✓✓ 1) 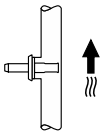 A0060229	✓✓ 1) 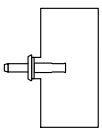 A0060390
Horizontal orientation Push-pull connection at top	✓ 2) 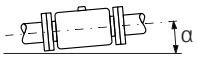 A0060226	✓ 1) 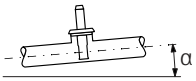 A0060230	✓ 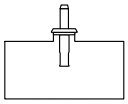 A0060391
Horizontal orientation, Push-pull connection at bottom	✓ 2) 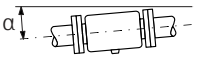 A0060227	✗ 3) 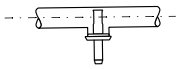 A0060231	✗ 3) 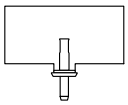 A0060392
Horizontal orientation, Push-pull connection on the side	✓ 2) ✗ 4) 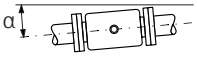 A0060228	✓ 1) ✗ 4) 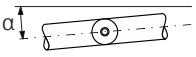 A0060232	–

1) In hygienic applications and media that tend to cause buildup, install the insertion sensor with an inclination angle of ≥ 3°, so that no dead legs can form in which the medium can remain. Ensure that the medium can drain completely and that no residue remains on the sensor, weld-in adapter or T-piece.

2) The measuring instrument should be self-draining for hygiene applications. A vertical orientation is recommended for this. If only a horizontal orientation is possible, an angle of inclination α ≥ 3° is recommended.

3) This orientation is not suitable in hygienic applications or media that tend to form buildup. Install the insertion sensor such that no dead space is created in which the medium can remain. Ensure that the medium can drain completely and that no residue remains on the sensor, weld-in adapter or T-piece.

4) This orientation is not suitable for media that tend to form buildup on the bearing surface and can thereby affect the measurement result.

Process connections

Installation conditions for weld-in adapter

- For detailed information, see "Technical Information" TI00426F (weld-in adapters, process adapters and flanges).
- For process connection version G1", there is a weld-in adapter as an accessory, → 42.

Weld in the weld-in adapter in such a way that the leakage hole is pointing downwards. This enables any leaks to be detected more quickly.

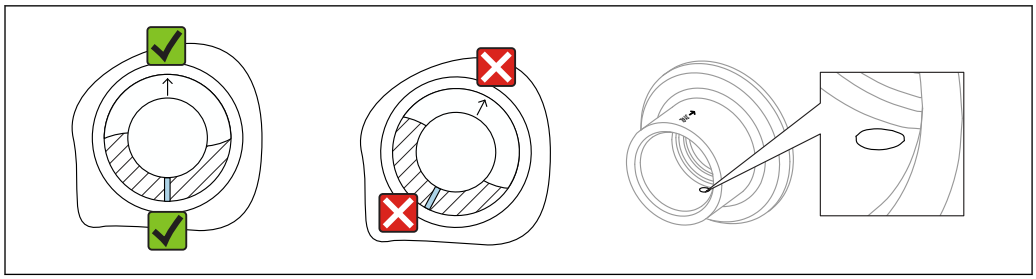

A0060462

Installation conditions for T-piece installation

- The sensor opening must be completely wetted with the medium.
- To ensure hygienic installation the dead end of the T-piece should be minimized. See also the "Certificates and approvals/hygienic compatibility" section → 40.
  The ratio between the depth of the T-piece (L), diameter D of the T-piece and diameter d of the sensor must comply with:
  - For EHEDG: L/(D-d) < 1
  - For 3-A: L/(D-d) < 2
- T-piece length:
  - For pipe installation a T-piece with a length of L = 15 mm must be used.
  - For tank installation a T-piece with a length of L ≤ 25 mm must be used.

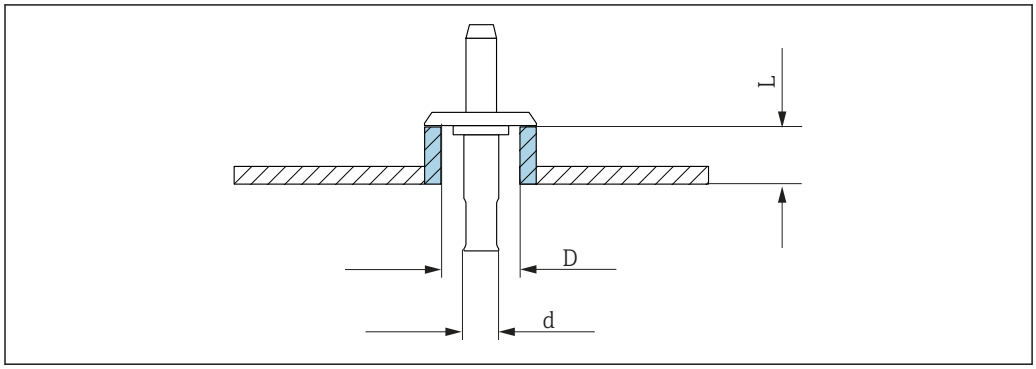

A0060470

Inlet and outlet runs

Observe the following inlet and outlet runs to comply with accuracy specifications:

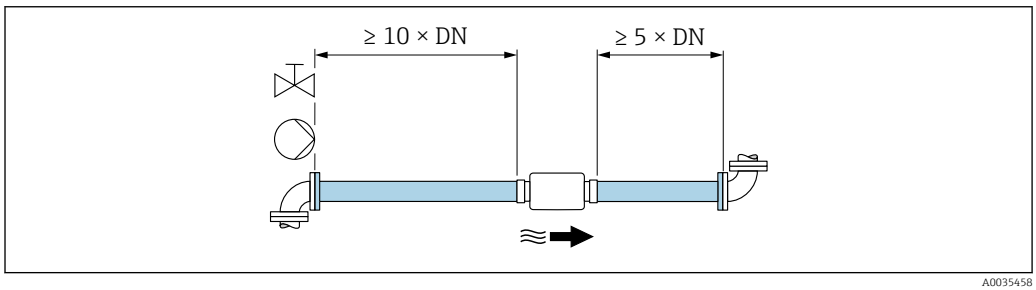

A0035458

11 Inlet and outlet runs

Mounting the transmitter housing

Transmitter with aluminum housing

Mount on the DIN rail DIN EN 60715 TH 35 using the DIN rail holder.

Transmitter with stainless steel housing

The transmitter can be mounted in the following ways:
- Wall mounting: Mounting over the mounting holes
- Post mounting: Mounting with transmitter holder (accessory)

Special installation instructions

Sanitary compatibility

If installing the sensor in hygienic applications:
- Refer to the instructions in the "Certificates and approvals/hygienic compatibility" section → 40.
- Ensure that liquid cannot accumulate on the outside of the measuring instrument.
- If the measuring instrument is installed horizontally, align the connection socket for the connecting cable so it is pointing upward.
- Select the orientation in such that the measuring instrument is self-draining when installed. Installation with an inclination angle of >3° is recommended for this purpose.
- In tanks the sensor must be installed such that all surfaces are directly reachable by spray from a cleaning device.
- Avoid or minimize dead legs .

Environment

Ambient temperature range

Sensor	0 to +60 °C (+32 to +140 °F)
Transmitter with aluminum housing	0 to +60 °C (+32 to +140 °F)
Transmitter with stainless steel housing	0 to +50 °C (+32 to +122 °F)
Connecting cable supplied	Permanently installed: −40 to +80 °C (−40 to +176 °F) Loosely installed: −20 to +80 °C (−4 to +176 °F)

Storage temperature

The storage temperature corresponds to the operating temperature range of the transmitter and the sensor → 23.

Degree of protection

Sensor	IP66/IP67 with cable plugged in, suitable for Pollution degree 4
Transmitter with Aluminum housing	IP40, suitable for Pollution degree 2
Transmitter with Stainless steel housing	IP66, suitable for Pollution degree 2

Relative humidity

Sensor	4 to 95 %
Transmitter with Aluminum housing	4 to 80 %
Transmitter with Stainless steel housing	4 to 95 %

Operating altitude

According to EN 61010-1
≤ 2 000 m (6 562 ft)

Electromagnetic compatibility (EMC)

- As per IEC/EN 61326
- Maximum deviation under the effect of disturbance: < 2%
- For details, refer to the Declaration of Conformity.

The device is not designed for use in living areas and cannot guarantee adequate protection of the radio reception in such environments.

Process

Medium temperature range

Sensor	0 to +120 °C (+32 to +248 °F)

Temperature increase

Sensor	Max. 55 °C/s (99 °F/s)

NOTICE

Large and particularly rapid temperature increases can damage the sensor.

▶ Ensure that the immediate temperature increase of the medium does not exceed 55 °C/s (99 °F/s).

Nominal pressure

Sensor	0 to 16 bar (0 to 232 psi)

Internal cleaning

For more information on cleaning, see the "Maintenance" section of the "Operating Instructions".

Inline sensor	CIP cleaning
Insertion sensor	▪ CIP cleaning ▪ SIP cleaning

Flow velocity

Inline sensor	Max. 10 m/s (32.8 ft/s)
Insertion sensor	Max. 5 m/s (16.4 ft/s)

Mechanical construction

Dimensions in SI units

Sensor

Transmitter with aluminum housing

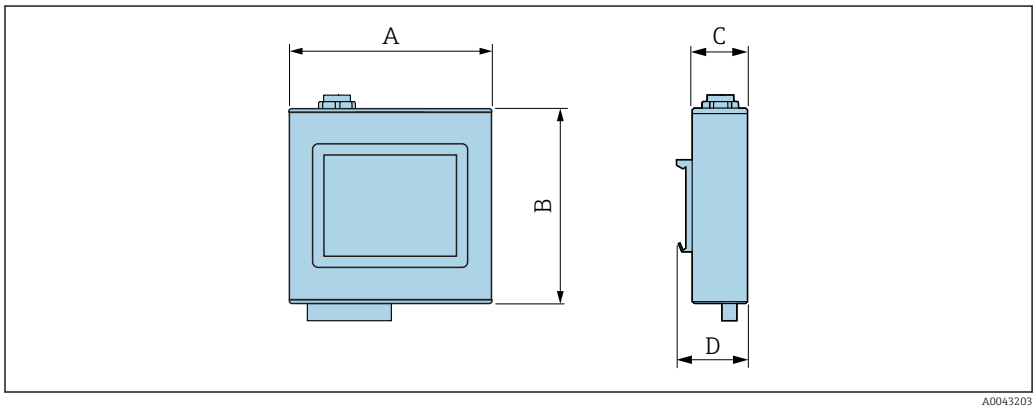

A0043203

Order code for "Transmitter housing", option A "Aluminum, anodized"

A [mm]	B [mm]	C [mm]	D [mm]
110	104	30	38

Transmitter with stainless steel housing

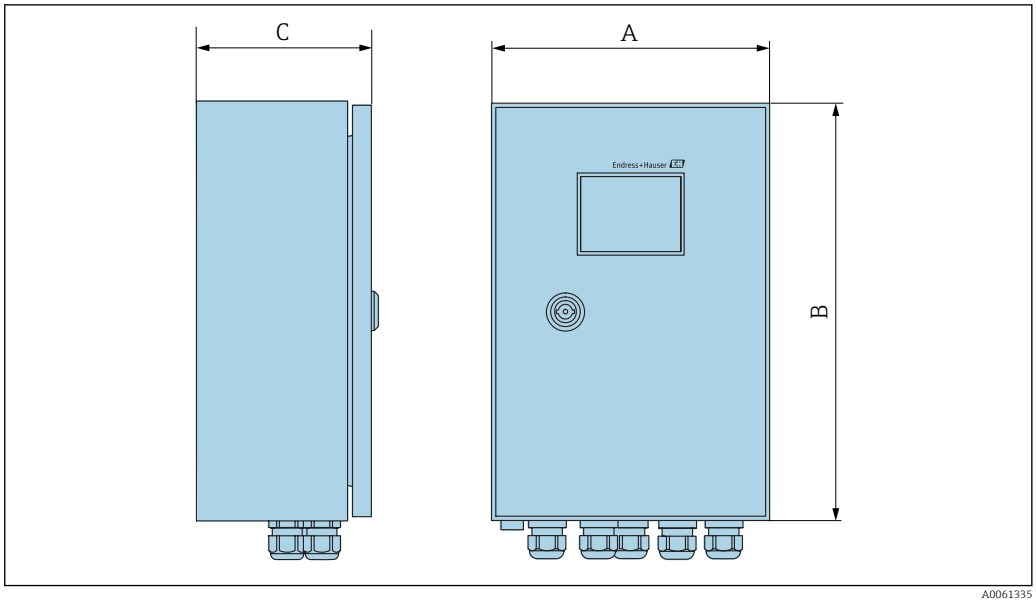

A0061335

Order code for "Transmitter housing", option B, "Stainless"

A [mm]	B [mm]	C [mm]
200	300	125

Transmitter holder for mounting on posts

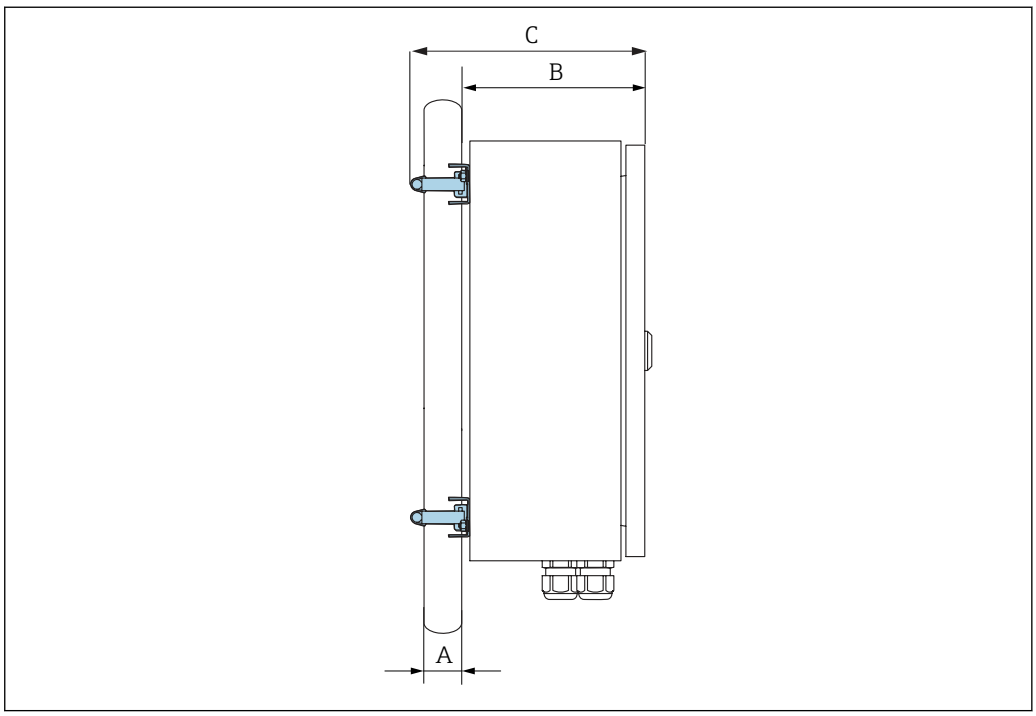

A0061336

Order code for "Accessory enclosed", option PC "Transmitter holder (pipe mounting)" or subsequently with the order number DK9503

A [mm]	B [mm]	C [mm]
ϕ 28 to 65	132	171 to 208

Inline sensors

Sensor

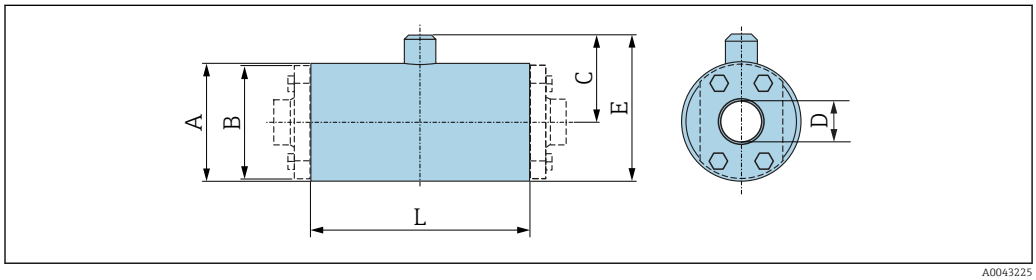

A0043225

DN	A [mm]	B [mm]	C [mm]	D [mm]	E [mm]	L [mm]
25 mm (DIN)	75	72	56.6	26	94	140
1" (ANSI)	75	72	56.6	22.6	94	140

Clamp connections with aseptic gasket seal

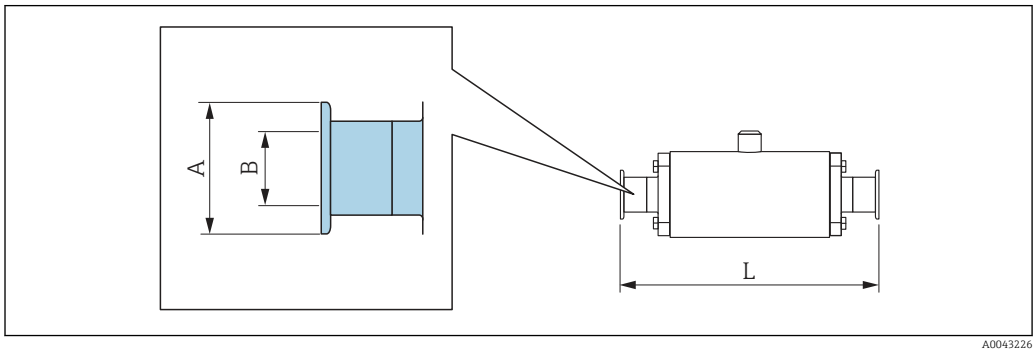

A0043226

Clamp DIN 32676 series A
1.4404 (316L)
Order code for "Process connection", option **DBS**

DN [mm]	Suitable for pipe DIN 11850 [mm]	A [mm]	B [mm]	L [mm]
25	30 × 2 (DN 25)	50.5	26	229

Surface roughness: $R_a \leq 0.76$ µm
Pay attention to the internal diameters of the measuring pipe and process connection (B) when cleaning with pigs.

Tri-Clamp, ASME BPE
1.4404 (316L)
Order code for "Process connection", option **FAS**

DN	Suitable for pipe as per ASME BPE and DIN 11866 series C [mm]	A [mm]	B [mm]	L [mm]
1"	25.4 × 1.65	50.4	22.1	197

Surface roughness: $R_a \leq 0.76$ µm
Pay attention to the internal diameters of the measuring pipe and process connection (B) when cleaning with pigs.

Clamp ISO 2852
1.4404 (316L)
Order code for "Process connection", option **IBS**

DN	Suitable for pipe ISO 2037 [mm]	A [mm]	B [mm]	L [mm]
1"	25.4 × 1.65	50.5	22.6	228.6

Surface roughness: $R_a \leq 0.76$ µm
Pay attention to the internal diameters of the measuring pipe and process connection (B) when cleaning with pigs.

Welding nipple with aseptic gasket seal

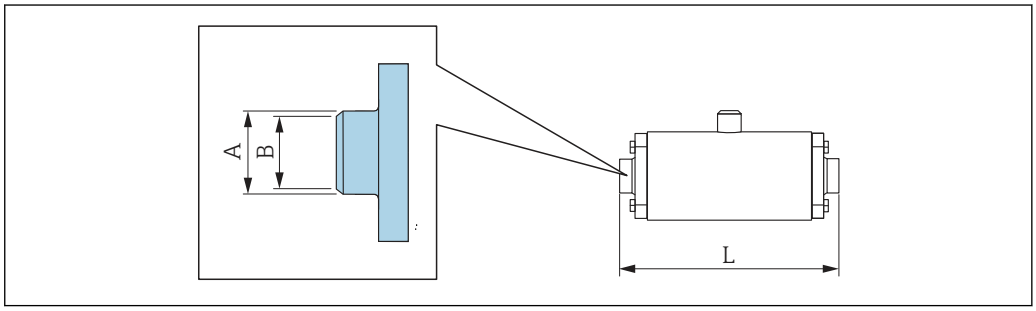

A0043230

Welding nipple EN 10357 series A
1.4404 (316L)
Order code for "Process connection", option **DAS**

DN [mm]	Suitable for pipe EN 10357 series A [mm]	A [mm]	B [mm]	L [mm]
25	29 × 1.5	29	26	186.6

Surface roughness: $R_a \leq 0.76$ µm
Pay attention to the internal diameters of the measuring pipe and process connection (B) when cleaning with pigs.

Welding nipple ISO 2037
1.4404 (316L)
Order code for "Process connection", option **IAS**

DN	Suitable for pipe ISO 2037 [mm]	A [mm]	B [mm]	L [mm]
1"	25.4 × 1.60	25	22.6	172.2

Surface roughness: $R_a \leq 0.76$ µm
Pay attention to the internal diameters of the measuring pipe and process connection (B) when cleaning with pigs.

Welding nipple ASME BPE
1.4404 (316L)
Order code for "Process connection", option **AAS**

DN	Suitable for pipe ASME BPE and DIN 11866 series C [mm]	A [mm]	B [mm]	L [mm]
1"	25.4 × 1.65	25.4	22.1	172.2

Surface roughness: $R_a \leq 0.76$ µm
Pay attention to the internal diameters of the measuring pipe and process connection (B) when cleaning with pigs.

Female with aseptic gasket seal

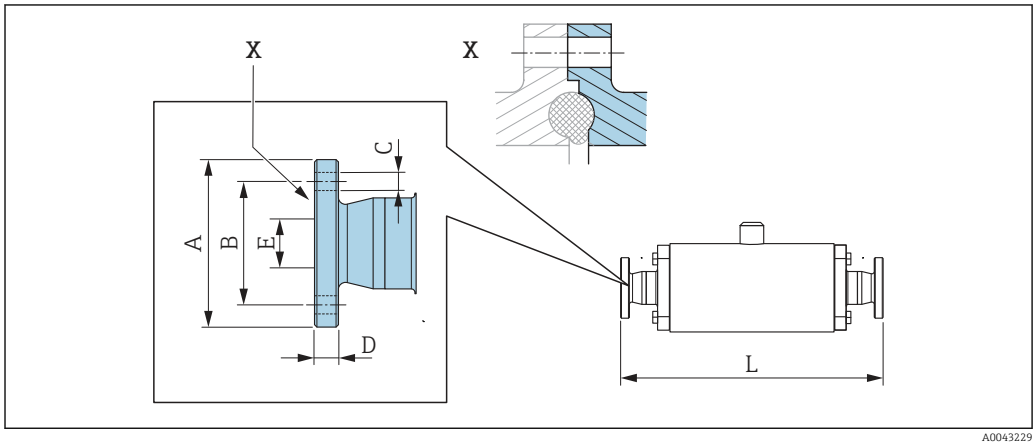

12 *Detail X: Asymmetrical process connection; the part shown in blue is provided by the supplier.*

Aseptic grooved flange, DIN 11864-2A
1.4404 (316L)
Order code for "Process connection", option **DQS**

DN [mm]	Suitable for pipe EN 10357 Form A, grooved flange [mm]	A [mm]	B [mm]	C [mm]	D [mm]	E [mm]	L [mm]
25	29 × 1.5 (DN 25)	70	53	4 × Ø9	10	26	237

Surface roughness: $R_a \leq 0.76$ µm
Please note the internal diameters of the measuring tube and process connection (E) when cleaning with pigs.

Coupling with aseptic gasket seal

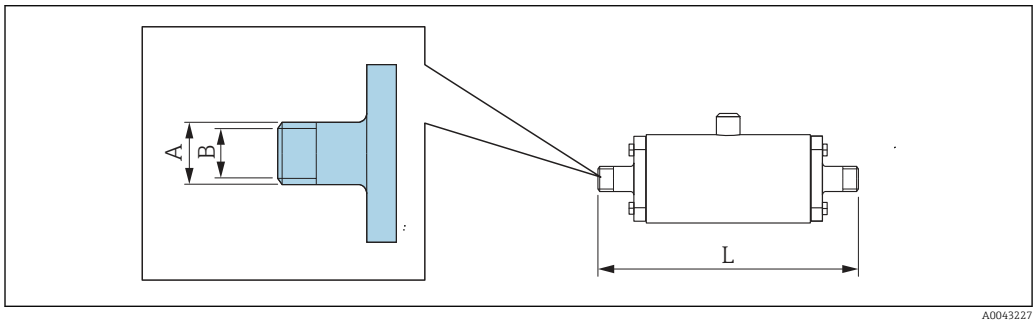

Threaded adapter DIN 11851
1.4404 (316L)
Order code for "Process connection", option **DCS**

DN [mm]	Suitable for pipe EN 10357 series B [mm]	A [mm/in]	B [mm]	L [mm]
25	28 × 1 or 29 × 1.5	Rd 52 × 1/6	26	244

Surface roughness: $R_a \leq 0.76$ µm
Pay attention to the internal diameters of the measuring pipe and process connection (B) when cleaning with pigs.

Aseptic threaded adapter DIN 11864-1 A
1.4404 (316L)
Order code for "Process connection", option **DDS**

DN [mm]	Suitable for pipe EN 10357 Form A [mm]	A [mm/in]	B [mm]	L [mm]
25	29 × 1.5	Rd 52 × 1/6	26	238

Surface roughness: $R_a \leq 0.76$ µm
Pay attention to the internal diameters of the measuring pipe and process connection (B) when cleaning with pigs.

SMS 1145, thread
1.4404 (316L)
Order code for "Process connection", option **SAS**

DN	Suitable for pipe ODT	A [mm/in]	B [mm]	L [mm]
1"	1"	Rd 40 × 1/6	22.6	201.6

Surface roughness: $R_a \leq 0.76$ µm
Pay attention to the internal diameters of the measuring pipe and process connection (B) when cleaning with pigs.

Insertion sensors

External thread ISO 228, 1"

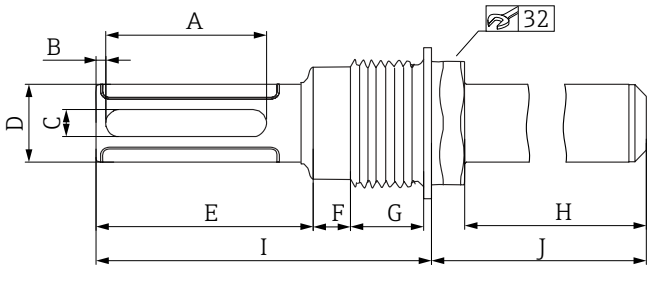

A0061436

External thread ISO 228, 1"
1.4404 (316L)
Order code for "Process connection", option **I2S**

Device version	A [mm]	B [mm]	C [mm]	D [mm]	E [mm]	F [mm]	G [mm]	H [mm]	I [mm]	J [mm]
Insertion DN65–100	41.5	2.5	7	Dia. 20	55	11	18.5	94.5	86.5	103
Insertion tank 220 mm					110			74.5	141.5	83

Options for surface roughness → 39

DN50 DIN 11851 conical coupling incl. union nut (dairy connection)

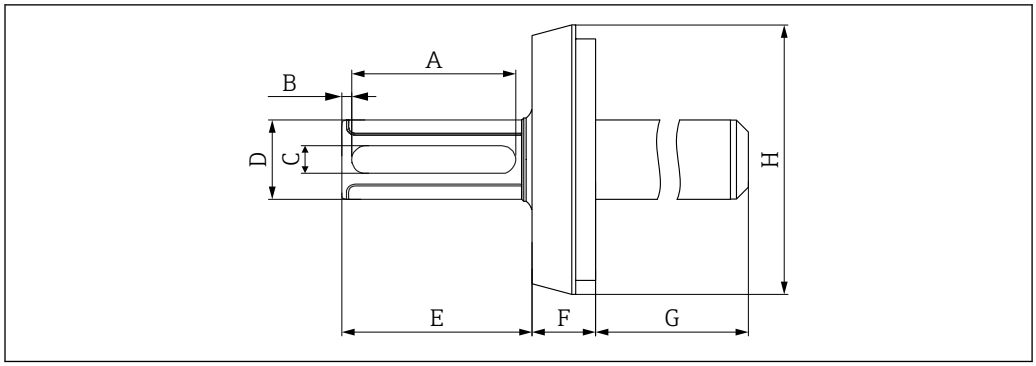

A0061437

DN50 DIN 11851 conical coupling incl. union nut (dairy connection) **1.4404 (316L)** *Order code for "Process connection", option* **KBW**								
Device version	**A** [mm]	**B** [mm]	**C** [mm]	**D** [mm]	**E** [mm]	**F** [mm]	**G** [mm]	**H** [mm]
Insertion DN50	41.5	2.5	7	Dia. 20	55	16	83.5	67.9
Insertion DN65–100								
Options for surface roughness → 🖹 39								

Tri-Clamp 2"

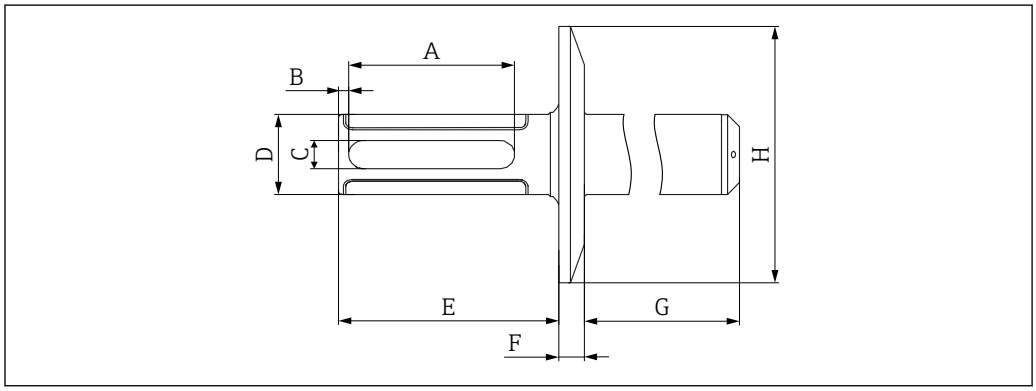

A0061438

Tri-Clamp 2" **1.4404 (316L)** *Order code for "Process connection", option* **FBW**								
Device version	**A** [mm]	**B** [mm]	**C** [mm]	**D** [mm]	**E** [mm]	**F** [mm]	**G** [mm]	**H** [mm]
Insertion DN50	41.5	2.5	7	Dia. 20	55	6.35	93.15	64
Insertion DN65–100					70		78.15	
Insertion tank 220 mm					130		88.15	
Options for surface roughness → 🖹 39								

Varivent N

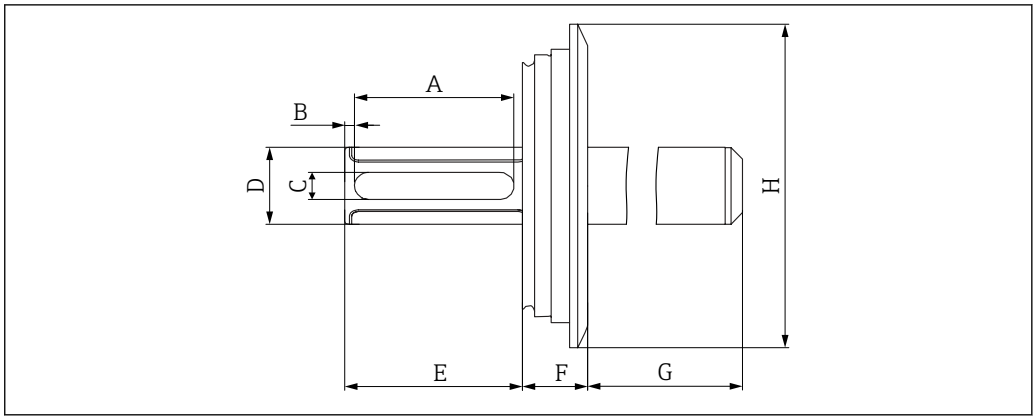

A0061439

Varivent N **1.4404 (316L)** *Order code for "Process connection", option* **VAS**								
Device version	**A** **[mm]**	**B** **[mm]**	**C** **[mm]**	**D** **[mm]**	**E** **[mm]**	**F** **[mm]**	**G** **[mm]**	**H** **[mm]**
Insertion DN50	41.5	2.5	7	Dia. 20	43	17	94.5	84
Insertion DN65–DN100					55		82.5	
Insertion tank 220 mm					130		77.5	
Options for surface roughness → 🖹 39								

Dimensions in US units

Sensor

Transmitter with aluminum housing

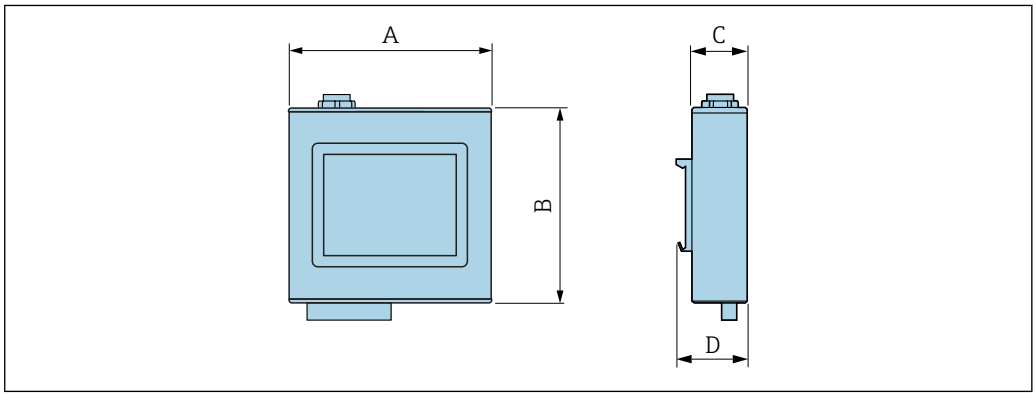

A0043203

Order code for "Transmitter housing", option A "Aluminum, anodized"

A **[in]**	**B** **[in]**	**C** **[in]**	**D** **[in]**
4.33	4.09	1.18	1.50

Transmitter with stainless steel housing

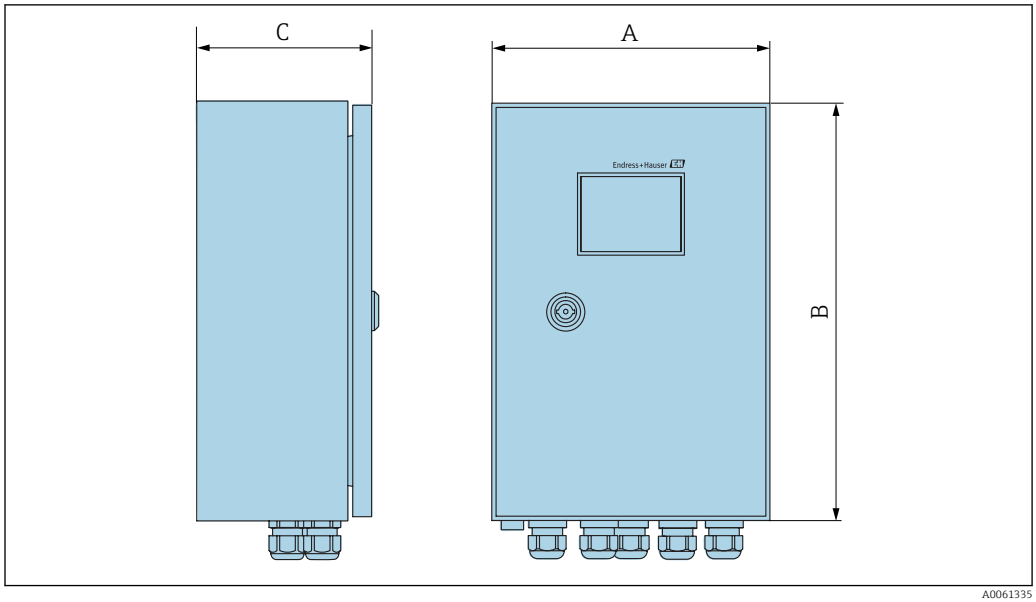

A0061335

Order code for "Transmitter housing", option B, "Stainless"

A [in]	B [in]	C [in]
7.87	11.81	4.92

Transmitter holder for mounting on posts

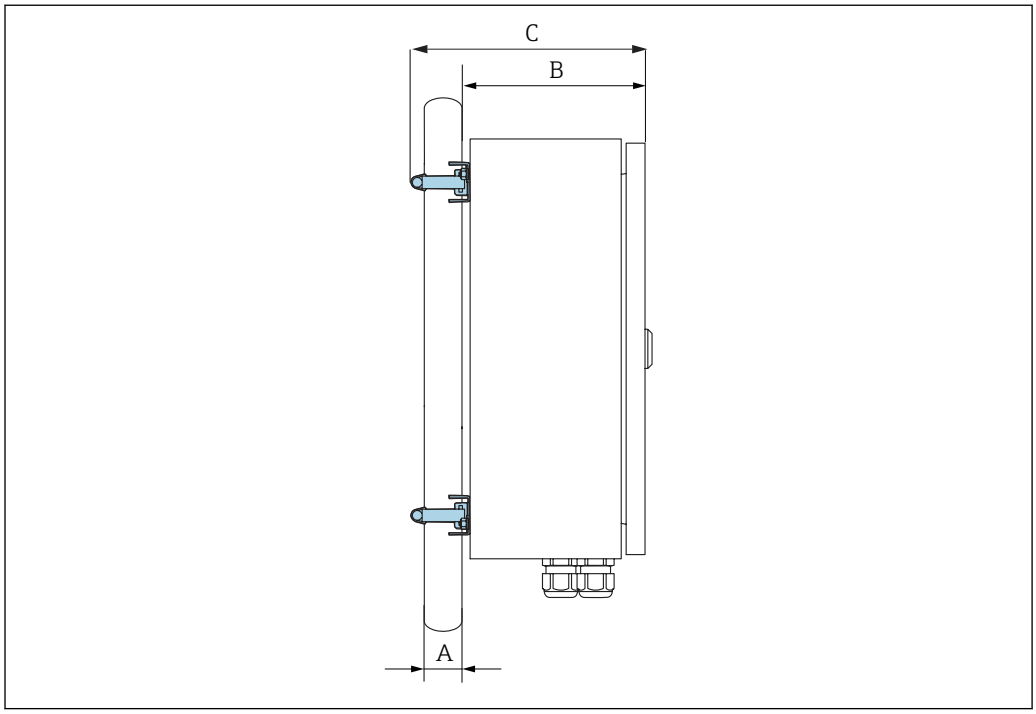

A0061336

Order code for "Accessory enclosed", option PC "Transmitter holder (pipe mounting)" or subsequently with the order number DK9503

A [in]	B [in]	C [in]
ϕ 1.10 to 2.56	5.20	6.73 to 8.19

Inline sensors

Inline sensors

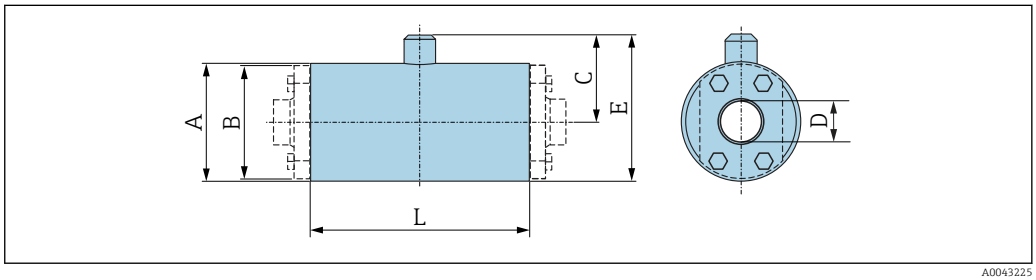

A0043225

DN	A [in]	B [in]	C [in]	D [in]	E [in]	L [in]
25 mm (DIN)	2.95	2.83	2.23	1.02	3.7	5.51
1" (ANSI)	2.95	2.83	2.23	0.89	3.7	5.51

Clamp connections with aseptic gasket seal

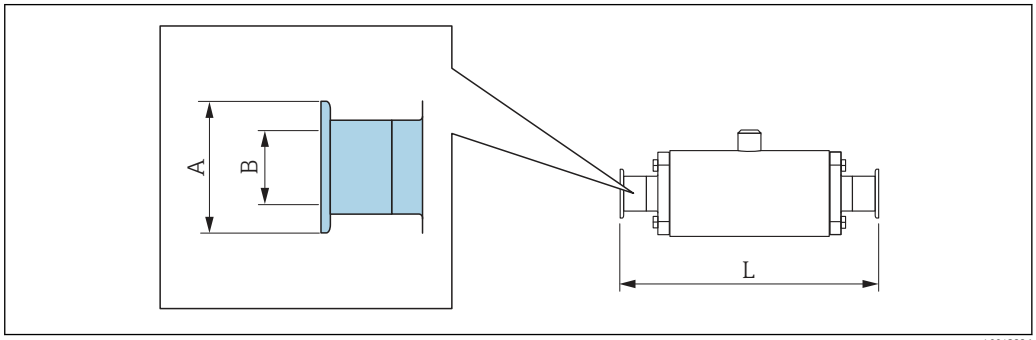

A0043226

Tri-Clamp, ASME BPE
1.4404 (316L)
Order code for "Process connection", option **FAS**

DN	Suitable for pipe as per ASME BPE and DIN 11866 series C	A [in]	B [in]	L [in]
1"	1"	2	0.87	7.76

Surface roughness: $R_a \leq 30$ µin
Pay attention to the internal diameters of the measuring pipe and process connection (B) when cleaning with pigs.

Clamp ISO 2852
1.4404 (316L)
Order code for "Process connection", option **IBS**

DN	Suitable for pipe ISO 2037 [in]	DN Clamp ISO 2852 [in]	A [in]	B [in]	L [in]
1"	1.00 × 0.06	1"	2.00	0.89	9.0

Surface roughness: $R_a \leq 30$ µin
Pay attention to the internal diameters of the measuring pipe and process connection (B) when cleaning with pigs.

Welding nipple with aseptic gasket seal

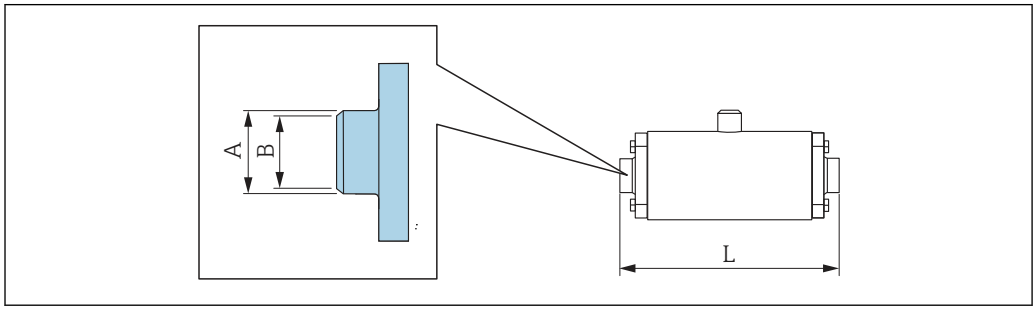

A0043230

Welding nipple ISO 2037
1.4404 (316L)
Order code for "Process connection", option **IAS**

DN	Suitable for pipe ISO 2037 [in]	A [in]	B [in]	L [in]
1"	1.00 × 0.06	0.98	0.89	6.78

Surface roughness: $R_a \leq 30$ µin
Pay attention to the internal diameters of the measuring pipe and process connection (B) when cleaning with pigs.

Welding nipple ASME BPE
1.4404 (316L)
Order code for "Process connection", option **AAS**

DN	Suitable for pipe ASME BPE and DIN 11866 series C [in]	A [in]	B [in]	L [in]
1"	1.00 × 0.06	1.00	0.87	6.78

Surface roughness: $R_a \leq 30$ µin
Pay attention to the internal diameters of the measuring pipe and process connection (B) when cleaning with pigs.

Coupling with aseptic gasket seal

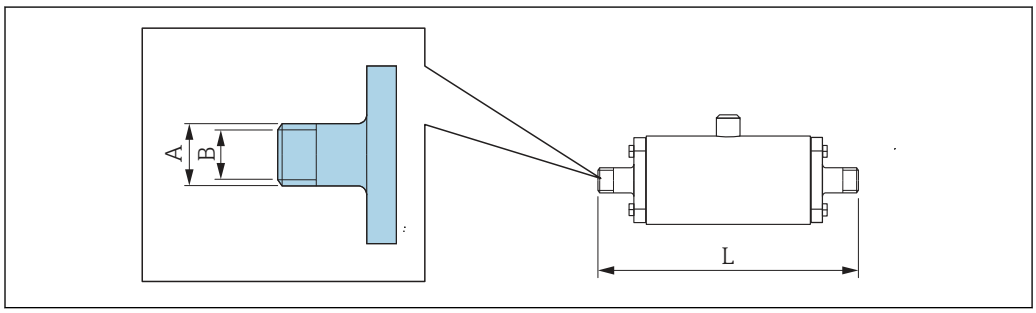

A0043227

Threaded adapter DIN 11851
1.4404 (316L)
Order code for "Process connection", option **DCS**

DN	Suitable for pipe EN 10357 series B [in]	A [in]	B [in]	L [in]
½"	Pipe ODT ¾	Rd 0.05 × 0.13	0.63	9.61

Surface roughness: R_a ≤ 30 µin
Pay attention to the internal diameters of the measuring pipe and process connection (B) when cleaning with pigs.

SMS 1145, thread
1.4404 (316L)
Order code for "Process connection", option **SAS**

DN	Suitable for pipe ODT	A [in]	B [in]	L [in]
1"	1"	Rd1.57 × 0.17	0.89	7.94

Surface roughness: R_a ≤ 30 µin
Pay attention to the internal diameters of the measuring pipe and process connection (B) when cleaning with pigs.

Insertion sensors

External thread ISO 228, 1"

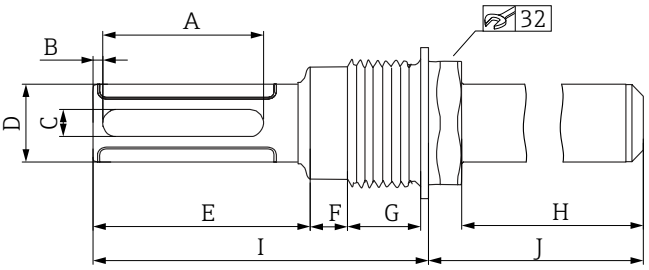

A0061436

External thread ISO 228, 1"
1.4404 (316L)
Order code for "Process connection", option **I2S**

Device version	A [in]	B [in]	C [in]	D [in]	E [in]	F [in]	G [in]	H [in]	I [in]	J [in]
Insertion DN65–100	1.63	0.10	0.28	Dia. 0.79	2.17	0.43	0.73	3.72	3.41	4.06
Insertion tank 220 mm					4.33			2.93	5.57	3.27

Options for surface roughness → 🖹 39

DN50 DIN 11851 conical coupling incl. union nut (dairy connection)

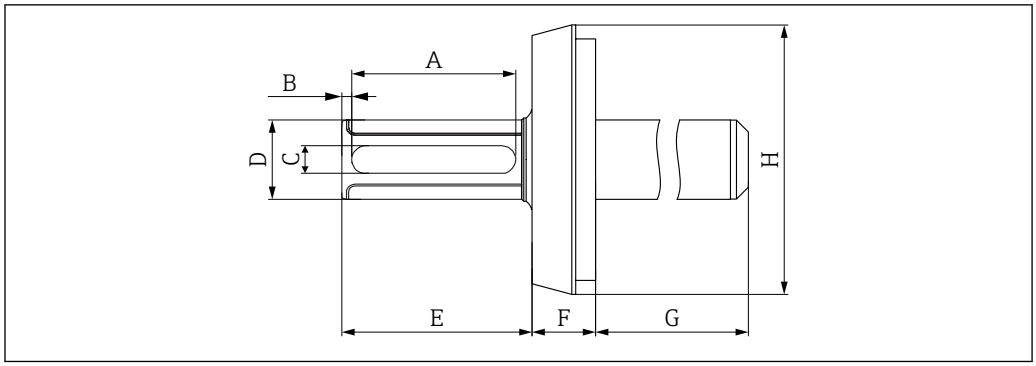

A0061437

DN50 DIN 11851 conical coupling incl. union nut (dairy connection) **1.4404 (316L)** *Order code for "Process connection", option* **KBW**								
Device version	**A** **[in]**	**B** **[in]**	**C** **[in]**	**D** **[in]**	**E** **[in]**	**F** **[in]**	**G** **[in]**	**H** **[in]**
Insertion DN50	1.63	0.10	0.28	Dia. 0.79	2.17	0.63	3.29	2.67
Insertion DN65–100								
Options for surface roughness → 🖹 39								

Tri-Clamp 2"

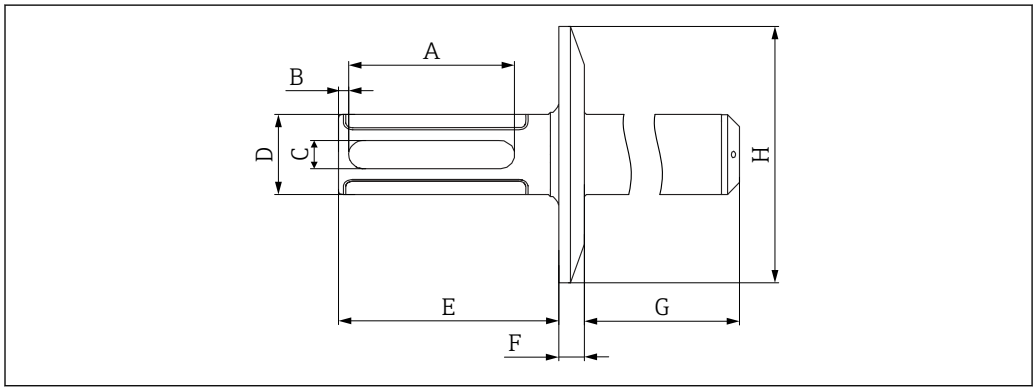

A0061438

Tri-Clamp 2" **1.4404 (316L)** *Order code for "Process connection", option* **FBW**								
Device version	**A** **[in]**	**B** **[in]**	**C** **[in]**	**D** **[in]**	**E** **[in]**	**F** **[in]**	**G** **[in]**	**H** **[in]**
Insertion DN50	1.63	0.10	0.28	Dia. 0.79	2.17	0.25	3.68	2.52
Insertion DN65–100					2.76		3.08	
Insertion tank 220 mm					5.12		3.47	
Options for surface roughness → 🖹 39								

Varivent N

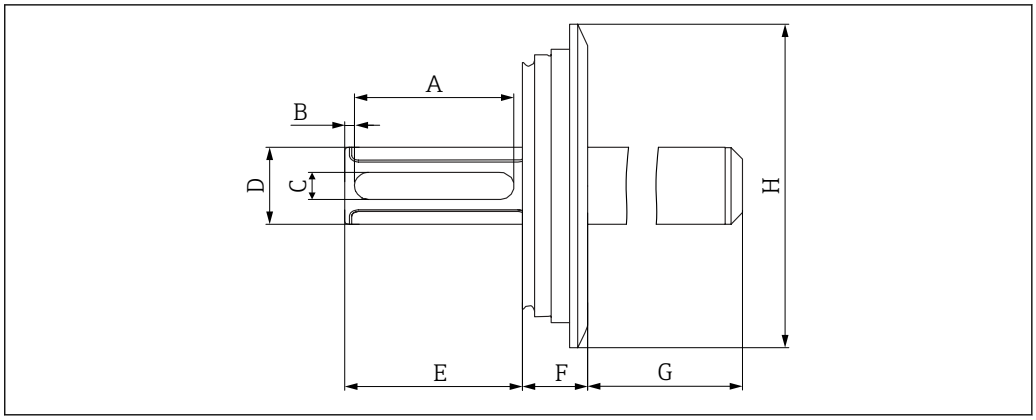

A0061439

Varivent N **1.4404 (316L)** *Order code for "Process connection", option* **VAS**								
Device version	**A [in]**	**B [in]**	**C [in]**	**D [in]**	**E [in]**	**F [in]**	**G [in]**	**H [in]**
Insertion DN50	1.63	0.10	0.28	Dia. 0.79	1.69	0.67	3.72	3.31
Insertion DN65–DN100					2.17		3.25	
Insertion tank 220 mm					5.12		3.05	
Options for surface roughness → 🖹 39								

Weight

Transmitter

Transmitter with Aluminum housing	0.34 kg (0.8 lb)
Transmitter with Stainless steel housing	4.75 kg (10.47 lb)

Inline sensor

DN 25 mm (DIN)	Max. 2.42 kg (5.34 lb)
DN 1" (ANSI)	Max. 2.48 kg (5.47 lb)

The weight refers to the weight of a device with flanges. It can be lower than specified depending on the process connection.

Insertion sensor

Process connection	**Device version weight**		
	Insertion DN50	**Insertion DN65-100**	**Insertion tank 220 mm**
External thread ISO 228, 1"	–	0.37 kg (0.82 lb)	0.41 kg (0.90 lb)
DN50 DIN 11851 conical coupling incl. union nut	0.57 kg (1.26 lb)	0.57 kg (1.26 lb)	–
Tri-Clamp 2"	0.30 kg (0.66 lb)	0.30 kg (0.66 lb)	0.38 kg (0.84 lb)
Varivent N	0.61 kg (1.34 lb)	0.71 kg (1.57 lb)	0.79 kg (1.74 lb)

Materials

Transmitter housing

Aluminum transmitter housing, order code for "Transmitter housing", option A

Housing	Anodized aluminum
Window material	Glass
Terminal connection	Polyamide (PA66)
Ethernet interface	▪ Socket: Ferrite ▪ Contact housing: Thermoplastic ▪ Contacts: 100 % tin with nickel coating, gold-plated
Push-pull connection	▪ Socket: Brass, nickel-plated ▪ Contact housing: Polyetheretherketone (PEEK) ▪ Contacts: Brass, gold-plated

Stainless steel transmitter housing, order code for "Transmitter housing", option B

Housing	Stainless steel 1.4301 (304)
Sealing system	Seamless foamed PU seal
Window material	Polycarbonate
Cable glands	Polyamide (PA)
Terminal connection	Polyamide (PA66)
Ethernet interface	▪ Socket: Ferrite ▪ Contact housing: Thermoplastic ▪ Contacts: 100 % tin with nickel coating, gold-plated
Push-pull connection	▪ Socket: Brass, nickel-plated ▪ Contact housing: Polyetheretherketone (PEEK) ▪ Contacts: Brass, gold-plated

Sensor

Stainless steel, 1.4404 (316L)

Connecting cable

Cable, external material	Polyurethane as per EN 60811-2-1 (oil-resistant, halogen-free)
Push-pull connector (standard)	▪ Socket: Brass, nickel-plated ▪ Contact housing: Polyetheretherketone (PEEK) ▪ Contacts: Brass, nickel , gold

Process connections

Stainless steel, 1.4404 (316L)

Seals of the inline measuring instrument

- EPDM, not resistant to mineral oils
- FKM
- VMQ (silicone)

Process connections

Inline measuring instrument with aseptic gasket seal:

- Welding nipple:
  - ASME BPE
  - ISO 2037)
  - EN 10357 Series A (DIN 11850)
- Clamp:
  - ASME BPE (Tri-Clamp)
  - ISO 2852
  - DIN 32676 Series A
- Glands:
  - DIN 11864-1 A (aseptic threaded hygienic connection)
  - DIN 11851
  - SMS 1145
- Flange:
  DIN 11864-2 A (aseptic grooved flange)

Insertion measuring instrument

- Varivent N
- Tri-Clamp, 2" (ISO 2852/DIN 32676, 53 × 1.5)
- External thread ISO 228, 1"
- Milk thread fitting DN50 (DIN 11851, conical coupling incl. union nut)

Surface roughness

All data relates to metallic parts in contact with medium.

Inline sensor

Ra ≤ 0.76 µm (30 µin), mechanically polished (order code for "Measuring tube mat., wetted surface", option BB)

Insertion sensor

Surface roughness option	Method	Order code option "Measuring tube mat., wetted surface"
Not specified	Not polished, welds in as-welded condition	SA [1]
Ra ≤ 0.76 µm (30 µin)	Electropolished	BD

1) Option: Ra ≤ 0.76 µm (30 µin) with order code for "Additional approval" option LT or LP

Operability

Local operation

Via display module

Order code for "Display, operation", touchscreen

In the case of transmitters with a stainless steel housing, the touchscreen can only be operated when the housing is open.

Supported operating tools

Operation via "Teqwave Viewer" Windows Desktop operating tool.

Reliable operation

If the power supply fails, data saved in the device and device configurations are retained.

Languages

Can be operated in the following languages:
- Via local operation (transmitter with touch screen)
  English, German, French, Spanish, Italian
- Via operating tool
  English, German, French, Spanish, Italian

Certificates and approvals

Current certificates and approvals for the product are available at www.endress.com on the relevant product page:

1. Select the product using the filters and search field.
2. Open the product page.
3. Select **Downloads**.

CE mark

The device meets the legal requirements of the applicable EU Directives. These are listed in the corresponding EU Declaration of Conformity along with the standards applied.

Endress+Hauser confirms successful testing of the device by affixing to it the CE mark.

UKCA marking

The device meets the legal requirements of the applicable UK regulations (Statutory Instruments). These are listed in the UKCA Declaration of Conformity along with the designated standards. By selecting the order option for UKCA marking, Endress+Hauser confirms a successful evaluation and testing of the device by affixing the UKCA mark.

Contact address Endress+Hauser UK:
Endress+Hauser Ltd.
Floats Road
Manchester M23 9NF
United Kingdom
www.uk.endress.com

Pressure Equipment Directive

The devices are designed and manufactured according to good engineering practice. They meet the requirements of
a) Art. 4, Section 3 of the Pressure Equipment Directive 2014/68/EU or
b) Part 1, Section 8 of Statutory Instruments 2016 No. 1105.
The scope of application is indicated
a) in diagrams 6 to 9 in Annex II of the Pressure Equipment Directive 2014/68/EU or
b) in Schedule 3, Section 2 of Statutory Instruments 2016 No. 1105.

Sanitary compatibility

- 3-A SSI 28-06
  - Confirmation by affixing the 3-A logo for measuring instruments with the order code for "Additional approval", option LP "3-A".
  - The 3-A approval refers to the measuring instrument.
  - When installing the measuring instrument, ensure that no liquid can accumulate on the outside of the measuring instrument.
  - Accessories (e.g. weather protection cover, wall holder unit) must be installed in accordance with the 3-A Standard.
    Each accessory can be cleaned. Disassembly may be necessary under certain circumstances.
- EHEDG certified: Type EL Class I
  - The EHEDG approval refers to the sensor.
  - Confirmation by affixing the EHEDG symbol for sensors with the order code for "Additional approval", option LT "EHEDG".
  - CIP must be performed without dismantling the instrument, maintaining a minimum flow velocity of 1.5 m/s (4.9 ft/s) to meet the EHEDG requirements.
  - For inline sensors: To meet the requirements for EHEDG certification, the sensor must be connected with process connections in accordance with the EHEDG position paper entitled "Easy Cleanable Pipe Couplings and Process Connections" (www.ehedg.org).
  - For insertion sensors with process connections Varivent N as well as Tri-Clamp, 2" ISO 2852/ Clamp connection DIN 32676, 53 × 1.5: The device complies with the EHEDG hygienic design criteria and shall be installed according to the EHEDG Position Paper with specific gaskets for tri-clamp connection. To ensure hygienic installation, the generally accepted hygiene measures for the entire production line must be observed. Any dead leg should be compliant with $L/(D-d) \leq 1$.
- Seals of the inline measuring instrument
  - EPDM is not a suitable seal material for media with a fat content > 8 %.
  - FDA-compliant seals: EPDM, FKM, VMQ.
  - EHEDG-compliant seals: EPDM, FKM.
- Food Contact Materials Regulation (EC) 1935/2004
- Food Contact Materials Regulation China GB 4806
- TSE/BSE Certificate of Suitability

Other certificates

Tests and certificates

EN10204-3.1 material certificate, wetted parts (order code for "Test, certificate", option JA)

External standards and guidelines

- EN 60529
  Degrees of protection provided by enclosure (IP code)
- EN 61010-1
  Safety requirements for electrical equipment for measurement, control and laboratory use – general requirements
- IEC/EN 61326-1; IEC/EN 61326-2-3
  Electromagnetic compatibility (EMC requirements)
- IEC 63000
  Restriction of hazardous substances in electric and electronic devices.

Ordering information

Detailed ordering information is available from your nearest sales organization www.addresses.endress.com or in the Product Configurator at www.endress.com:

1. Select the product using the filters and search field.
2. Open the product page.
3. Select **Configuration**.

Accessories

Various accessories, which can be ordered with the device or subsequently from Endress+Hauser, are available for the device. Detailed information on the order code in question is available from your local Endress+Hauser sales center or on the product page of the Endress+Hauser website: www.endress.com.

Device-specific accessories

For the transmitter

Accessories	Description
Transmitter	Transmitter for replacement. The serial number of the current transmitter must be specified when ordering. On the basis of the serial number, device-specific data in the replaced device can also be used in the new transmitter. This also includes the existing analysis parameters. Can be ordered separately: Order number DK9BXX.
Transmitter holder (pipe mounting)	Transmitter holder for stainless steel housing for mounting on a post. ▪ Order code for "Accessory enclosed": Option PC ▪ Can be ordered separately: Order number DK9503.
Sensor/transmitter connecting cable	Connecting cable between sensor and transmitter, available in various lengths. Order code for "Cable, remote version": ▪ Option D: 2 m (6 ft) ▪ Option E: 5 m (15 ft) ▪ Option F: 10 m (30 ft) Can be ordered separately: Order number XPD0047.

For the inline sensor

Accessory	Description
Mounting kit	Mounting kit consisting of: ▪ 2 process connections ▪ 8 screws ▪ Seals (optional) Can be ordered separately: Order number DK9H
Seal set	For regularly replacing seals for the sensor. Seal set consisting of two seals. Can be ordered separately: Order number DK9H

For the insertion sensor

Accessory	Description

Weld-in adapter	Welding socket made of stainless steel 1.4435/316 L for insertion sensor with external thread ISO 228, 1".
	Surface roughness Ra ≤ 0.76 µm (30 µin)
	Enclosed seals:
	▪ 1x silicone O-ring
	▪ 1x EPDM O-ring (EHEDG-compliant)
	Order code for "Accessory enclosed":
	▪ G1", d=53, pipe-mounting:
	  ▪ Option PG "Welding socket, G1", d=53, without inspection certificate"
	  ▪ Option PH "Welding socket, G1", d = 53, with inspection certificate"
	▪ G1G1", d=60, tank-mounting
	  ▪ Option PE "Welding socket, G1", d=60, without inspection certificate"
	  ▪ Option PF "Welding socket, G1", d=60, with inspection certificate"
	Can be ordered separately:
	▪ G1", d=53, pipe-mounting:
	  ▪ Welding socket without inspection certificate, order number: 71258358
	  ▪ Welding socket with inspection certificate, order number: 71093129
	▪ G1", d=60, tank-mounting:
	  ▪ Welding socket without inspection certificate, order number: 52001051
	  ▪ Welding socket with inspection certificate, order number: 52011896
	For detailed information, see "Technical Information" TI00426F (weld-in adapters, process adapters and flanges), available in the Downloads area of the Endress+Hauser website (www.endress.com/downloads).

Replacement seal set	Replacement seal set for insertion sensor with ISO 228, 1" external thread. Can be ordered separately: ▪ O-ring 28.17x3.53 silicone (VMQ,) FDA, 5 pcs, order number: 52014472 ▪ O-ring 28.17x3.53 EPDM, FDA, USP, 3 pcs, order number: 71140668 For detailed information, see "Technical Information" TI00426F (weld-in adapters, process adapters and flanges), available in the Downloads area of the Endress+Hauser website (www.endress.com/downloads).

General

Accessories	Description
Analysis parameters and packages of analysis parameters sorted by application	Fluid profile for the integration of new media. Available fluid profiles and analysis parameters, as well as their measuring ranges, are listed in the Applicator → 🖹 43. If a desired fluid profile is not available in the Applicator, Endress+Hauser requires a sample of the medium to create the fluid profile. Endress+Hauser provides the fluid profile as a file in lmf format. Each transmitter can use a maximum of 25 fluid profiles (or a maximum of 50 fluid profiles and recipes in combination). Fluid profiles are individually adapted to a specific measuring instrument and are intended only for use with that particular measuring instrument. Order number: DK9500

Service-specific accessories

Accessories	Description
Applicator/Product Guide	Software for selecting and sizing Endress+Hauser measuring instruments: ▪ Overview and selection of fluid profiles. ▪ Choice of measuring instruments for industrial requirements. ▪ Calculation of all the necessary data for identifying the optimum measuring instrument: e.g. nominal diameter and measurement accuracy. ▪ Graphic display of the calculation results. ▪ Determine the partial and complete order code, provision of design documents. The Applicator is available via https://portal.endress.com/webapp/applicator. The Applicator will be replaced by the end of 2026. From this point onwards, the relevant information and functions will be available in the new **Product Guide** app. The Product Guide is available via https://www.endress.com/en/field-instruments-overview/product-guide.
Engineering platform	Endress+Hauser's engineering platform enables you to optimize project execution, ensure consistent data processing, and improve collaboration among all stakeholders. Building on decades of experience in process automation and project services, Endress+Hauser offers the process industry a platform that integrates engineering data across the entire life cycle of your plant. This seamless data flow supports efficient project planning, smooth handover and reliable operations, resulting in faster execution, higher quality and reduced costs.
Netilion	IIoT ecosystem: Unlock knowledge With the Netilion IIoT ecosystem, Endress+Hauser allows you to optimize your plant performance, digitize workflows, share knowledge, and enhance collaboration. Drawing upon decades of experience in process automation, Endress+Hauser offers the process industry an IIoT ecosystem that helps you turn data into actionable insights. These insights allow process optimization, leading to increased plant availability, efficiency, and reliability – ultimately resulting in a more profitable plant. www.netilion.endress.com

Documentation

For an overview of the scope of the associated Technical Documentation, refer to the following:
- *Device Viewer* (www.endress.com/deviceviewer): Enter the serial number from the nameplate
- *Endress+Hauser Operations app*: Enter serial number from nameplate or scan matrix code on nameplate.

Standard documentation

Document type	Documentation code
Operating Instructions	BA02574D
Brief Operating Instructions	KA01501D

Supplementary device-dependent documentation

Special Documentation

Contents	Documentation code
Modbus TCP system integration	SD03565D
Downloading Fluid Profiles, Device Viewer Data and Firmware Updates via Netilion	SD03630D

Installation instructions

Contents	Comment
Installation instructions for spare part sets and accessories	The corresponding documentation code is listed with the relevant accessory..

Registered trademarks

Modbus®
Registered trademark of SCHNEIDER AUTOMATION, INC.

TRI-CLAMP®
Registered trademark of Ladish & Co., Inc., Kenosha, USA

VARIVENT®
Registered trademark of GEA Tuchenhagen GmbH, Büchen, Germany

71769370

www.addresses.endress.com

Endress+Hauser
People for Process Automation