SEW EURODRIVE

Assembly and Operating Instructions

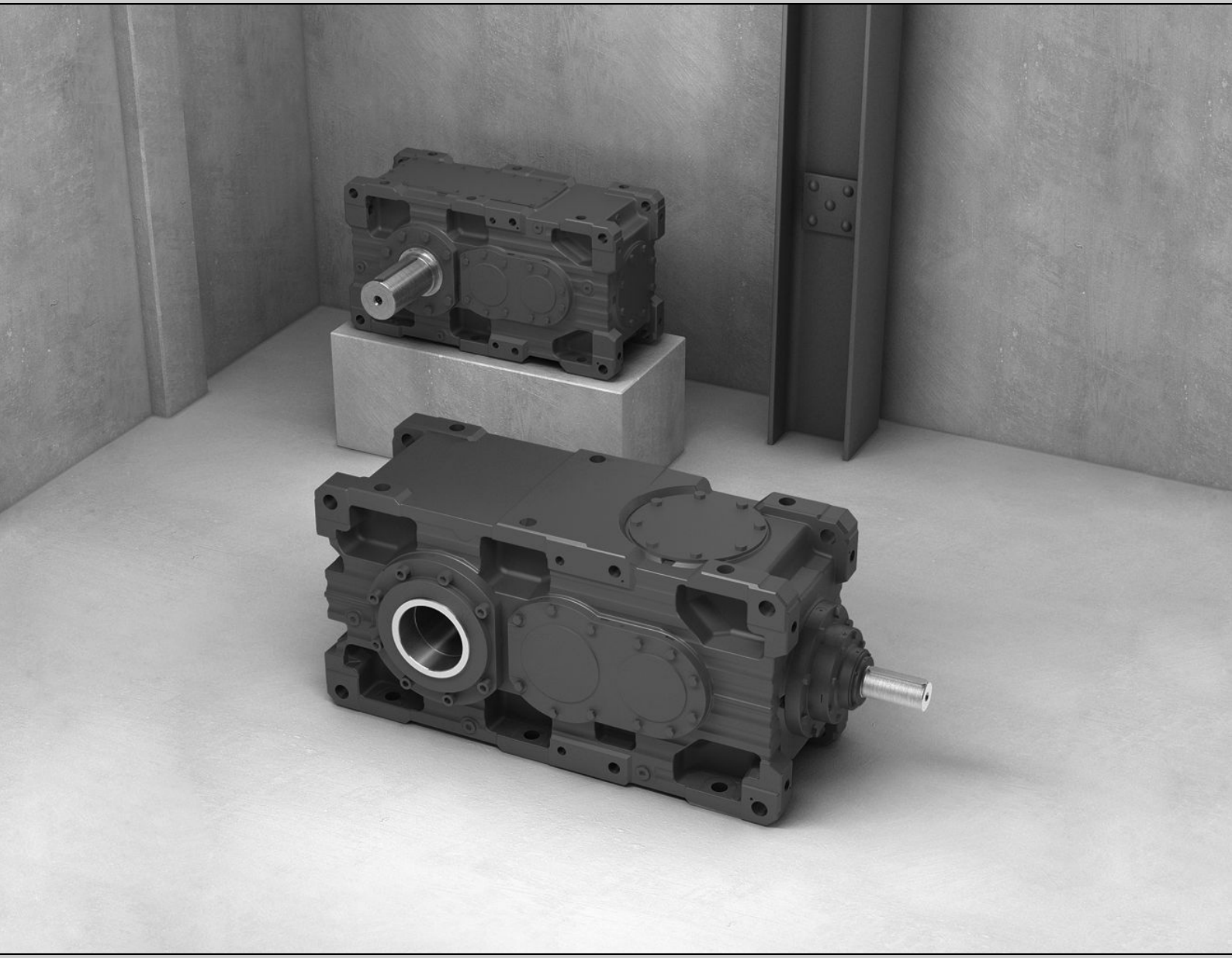

Industrial Gear Units

Helical and Bevel-Helical Gear Units

X.. Series

Torque classes from 6.8 – 475 kNm

Edition 01/2014

20284543 / EN



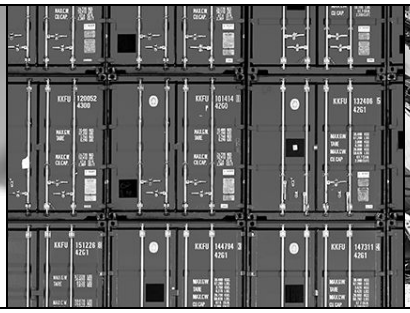




Contents

1 General information 7
1.1 How to use the operating instructions 7
1.2 Structure of the safety notes 7
1.3 Rights to claim under warranty 8
1.4 Exclusion of liability 8
1.5 Copyright notice 8
2 Safety notes 9
2.1 Preliminary remark 9
2.2 General information 9
2.3 Target group 9
2.4 Designated use 10
2.5 Other applicable documentation 10
2.6 Safety symbols on the gear unit 11
2.7 Symbols on the packaging 14
2.8 Transport 15
2.9 Storage and transport conditions 20
3 Structure of the basic gear unit 22
3.1 Nameplate 22
3.2 Type designations 23
3.3 Mounting positions 27
3.4 Mounting surfaces 29
3.5 Shaft positions 30
3.6 Mounting positions and standard mounting surfaces 31
3.7 Fixed and variable pivoted mounting positions 34
3.8 Direction of rotation dependencies 40
3.9 Housing types 43
3.10 Combination overview of housing types and options 46
3.11 Gearing and shafts 48
3.12 Input and output shafts 49
3.13 Sealing systems 53
3.14 Coating and surface protection systems 56
3.15 Lubrication 57
3.16 Accessories 58
4 Design of options and accessories 59
4.1 Oil expansion tank /ET 59
4.2 Shaft end pump /SEP 60
4.3 Motor pump /ONP 62
4.4 Torque arm /T 62
4.5 Flange couplings with cylindrical interference fit /FC 63
4.6 Mounting flange /F 64
4.7 Backstop /BS 65
4.8 Motor adapter /MA 66
4.9 V-belt drives /VBD 67

4.10 Drive packages on a steel frame ... 68
4.11 Cooling types ... 70
4.12 Fan /FAN ... 70
4.13 Water cooling cover /CCV ... 72
4.14 Water cooling cartridge /CCT ... 73
4.15 Oil-water cooler for splash lubrication /OWC ... 75
4.16 Oil-air cooler for splash lubrication /OAC ... 75
4.17 Oil-water cooler for pressure lubrication /OWP ... 75
4.18 Oil-air cooler for pressure lubrication /OAP ... 75
4.19 Oil heater /OH ... 76
4.20 Pressure switch /PS ... 77
4.21 Temperature sensor /PT100 ... 77
4.22 Temperature switch /NTB ... 77
4.23 Temperature switch /TSK ... 77
4.24 Diagnostic unit DUV30A (vibration diagnostics) ... 78
4.25 Diagnostic unit /DUO10A (oil aging) ... 79

5 Assembly / installation ... 80

5.1 Required tools/resources ... 80
5.2 Tolerances ... 80
5.3 Important notes ... 81
5.4 Prerequisite for assembly ... 83
5.5 Installing the gear unit ... 83
5.6 Filling gear units with oil / delivered without oil fill (standard) ... 85
5.7 Gear units delivered with oil fill (option) ... 91
5.8 Gear units with solid shaft ... 92
5.9 Flange couplings with cylindrical interference fit /FC ... 93
5.10 Rigid flange couplings with keyway ... 102
5.11 Output shaft as a hollow shaft with keyed connection /..A ... 108
5.12 Output shaft as a hollow shaft with shrink disk /..H ... 121
5.13 Output shaft as a splined hollow shaft /..V ... 137
5.14 Torque arm /T ... 144
5.15 Mounting flange /F ... 146
5.16 Couplings ... 147
5.17 Motor adapter /MA ... 149
5.18 V-belt drives /VBD ... 156
5.19 Base frame /BF ... 178
5.20 Swing base /SB ... 178
5.21 Motor pump /ONP ... 179
5.22 Fan /FAN ... 179
5.23 Water cooling cover /CCV ... 179
5.24 Water cooling cartridge /CCT ... 181
5.25 Oil-water cooler for splash lubrication /OWC ... 186
5.26 Oil-air cooler for splash lubrication /OAC ... 186
5.27 Oil-water cooler for pressure lubrication /OWP ... 186
5.28 Oil-air cooler for pressure lubrication /OAP ... 186

5.29 Oil heater /OH ... 187
5.30 Pressure switch /PS ... 199
5.31 Temperature sensor /PT100 ... 200
5.32 Temperature switch /NTB ... 201
5.33 Temperature switch /TSK ... 202
5.34 Brake ... 203
6 Startup ... 204
6.1 Important notes ... 204
6.2 Shaft end pump /SEP ... 205
6.3 Motor pump /ONP ... 205
6.4 Water cooling cover /CCV ... 205
6.5 Water cooling cartridge /CCT ... 206
6.6 Oil-water cooler with motor pump for splash lubrication /OWC ... 207
6.7 Oil-air cooler with motor pump for splash lubrication /OAC ... 207
6.8 Oil-water cooler for pressure lubrication /OWP ... 207
6.9 Oil-air cooler with motor pump for pressure lubrication /OAP ... 207
6.10 Oil heater /OH ... 208
6.11 Backstop /BS ... 209
6.12 Starting up the gear unit at low ambient temperatures ... 209
6.13 Gear unit shutdown/conservation ... 210
7 Inspection / maintenance ... 212
7.1 Preliminary work for inspection and maintenance ... 212
7.2 Inspection and maintenance intervals ... 213
7.3 Lubricant change intervals ... 215
7.4 Checking the oil level ... 216
7.5 Checking the oil consistency ... 223
7.6 Changing the oil ... 224
7.7 Checking and cleaning the breather plug ... 229
7.8 Refilling grease ... 229
7.9 Relubricating the bearing for drywell sealing systems ... 230
7.10 Motor pump /ONP ... 231
7.11 Shaft end pump /SEP ... 231
7.12 Fan /FAN ... 231
7.13 Water cooling cover /CCV ... 231
7.14 Water cooling cartridge /CCT ... 233
7.15 Oil-water cooler for splash lubrication /OWC ... 236
7.16 Oil-air cooler for splash lubrication /OAC ... 236
7.17 Oil-water cooler for pressure lubrication /OWP ... 237
7.18 Oil-air cooler for pressure lubrication /OAP ... 237
7.19 Oil heater /OH ... 237
7.20 Split housing ... 238

8 Lubricants 239
8.1 Lubricant selection 239
8.2 Lubricant table 239
8.3 Lubricant fill quantities for horizontal gear units/mounting position M1 ... 241
8.4 Lubricant fill quantities for horizontal gear units/mounting position M3 ... 243
8.5 Lubricant fill quantities for vertical gear units/mounting positions M5 and M6 245
8.6 Lubricant fill quantities for upright gear units/mounting position M2 248
8.7 Lubricant fill quantities for upright gear units/mounting position M4 250
8.8 Sealing greases/bearing greases 252
9 Malfunctions / remedy 253
9.1 Troubleshooting information 253
9.2 Possible malfunctions/remedy 254
9.3 Customer service 255
9.4 Disposal 256
10 Address list 257
Index 269

1 General information

1.1 How to use the operating instructions

Operating instructions are an integral part of the product and contain important information for operation and service. The operating instructions are written for all employees who assemble, install, start up, and service the product.

The operating instructions must be legible and accessible at all times. Make sure that staff responsible for the plant and its operation as well as persons who work independently on the unit, have read the operating instructions carefully and understood them. If you are unclear about any of the information in this documentation, or if you require further information, contact SEW-EURODRIVE.

1.2 Structure of the safety notes

1.2.1 Meaning of signal words

The following table shows the grading and meaning of the signal words for safety notes, warnings regarding potential risks of damage to property, and other notes.

Signal word	Meaning	Consequences if disregarded
⚠ **DANGER**	Imminent danger	Severe or fatal injuries
⚠ **WARNING**	Possible dangerous situation	Severe or fatal injuries
⚠ **CAUTION**	Possible dangerous situation	Minor injuries
NOTICE	Possible damage to property	Damage to the drive system or its environment
INFORMATION	Useful information or tip: Simplifies the handling of the drive system.	

1.2.2 Structure of the section-related safety notes

Section-related safety notes do not apply to a specific action, but to several actions pertaining to one subject. The used symbols indicate either a general or a specific hazard.

This is the formal structure of a section-related safety note:



⚠ SIGNAL WORD

Type and source of danger.

Possible consequence(s) if disregarded.

- Measure(s) to prevent the danger.

1.2.3 Structure of the embedded safety notes

Embedded safety notes are directly integrated in the instructions just before the description of the dangerous action.

This is the formal structure of an embedded safety note:

- ⚠ **SIGNAL WORD** Nature and source of hazard.

  Possible consequence(s) if disregarded.

  – Measure(s) to prevent the danger.

1.3 Rights to claim under warranty

A requirement of fault-free operation and fulfillment of any rights to claim under limited warranty is that you adhere to the information in the operating instructions. Therefore, read the operating instructions before you start working with the unit.

1.4 Exclusion of liability

You must comply with the information contained in these operating instructions to ensure safe operation of the X series gear units and to achieve the specified product characteristics and performance requirements. SEW-EURODRIVE assumes no liability for injury to persons or damage to equipment or property resulting from non-observance of these operating instructions. In such cases, any liability for defects is excluded.

1.5 Copyright notice

© 2014 – SEW-EURODRIVE. All rights reserved.

Unauthorized duplication, modification, distribution, or other utilization of the whole or any part of this documentation is strictly prohibited.

2 Safety notes

The following basic safety notes must be read carefully to prevent injury to persons and damage to property. The operator must ensure that the basic safety notes are read and adhered to. Make sure that persons responsible for the system and its operation, as well as persons who work independently on the unit, have read through the operating instructions carefully and understood them. If you are unclear about any of the information in this documentation, or if you require further information, please contact SEW-EURODRIVE.

2.1 Preliminary remark

The following safety notes are primarily concerned with the use of gear units. If you use gearmotors, also refer to the safety notes for motors in the corresponding operating instructions.

Also observe the supplementary safety notes in the individual sections of these operating instructions.

2.2 General information



⚠ WARNING

During operation, the gear units can have movable or rotating parts and hot surfaces.

Severe or fatal injuries

- All work related to transportation, storage, installation, assembly, connection, startup, maintenance and repair may only be carried out by qualified personnel, in strict observance of:
  - The relevant detailed operating instructions
  - Warning and safety signs on the gear unit
  - All other project planning documents, operating instructions and wiring diagrams related to the drive
  - The specific regulations and requirements for the system
  - National/regional regulations governing safety and the prevention of accidents
- Never install damaged products.
- Submit a complaint to the shipping company immediately in the event of damage.
- Removing covers without authorization, improper use or incorrect installation and operation may result in severe injuries to persons or damage to machinery.

Refer to the documentation for additional information.

2.3 Target group

Any mechanical work may only be performed by adequately qualified personnel. Qualified personnel in this context are persons who are familiar with the setup, mechanical installation, troubleshooting and maintenance for this product. Further, they are qualified as follows:

- Training in mechanical engineering, e.g. as a mechanic or mechatronics technician (final examinations must have been passed).
- They are familiar with these operating instructions.

Any electronic work may only be performed by adequately qualified electricians. Qualified electricians in this context are persons who are familiar with the electronic installation, startup, troubleshooting and maintenance for this product. Further, they are qualified as follows:

- Training in electrical engineering, e.g. as an electrician or mechatronics technician (final examinations must have been passed).
- They are familiar with these operating instructions.

Any work in further areas of transportation, storage, operation and waste disposal may only be carried out by persons who are trained appropriately.

All qualified personnel must wear appropriate protective clothing.

2.4 Designated use

X series industrial gear units are gear units run by motors for industrial and commercial systems. The units may only be run at the speeds and powers shown in the technical data or on the nameplate. Implementing gear unit loads other than the permitted values or operating the gear units in areas of application other than industrial and commercial systems is only permitted after consultation with SEW-EURODRIVE.

Using these products in potentially explosive atmospheres is prohibited, unless specifically designated otherwise.

In compliance with the EC Machinery Directive 2006/42/EC, the industrial gear units are components for installation in machinery and systems. In the scope of the EC directive, you must not take the machinery into operation in the designated fashion until you have established that the end product complies with Machinery Directive 2006/42/EC.

2.5 Other applicable documentation

The following publications and documents have to be observed as well:

- Helical and Bevel-Helical X.. Series Gear Units catalog
- Order documents, such as dimension sheet, order confirmation, etc.
- If required, the "AC Motors" operating instructions
- If required, the operating instructions of the options installed

2.6 Safety symbols on the gear unit



⚠ CAUTION

Safety symbols or signs can become dirty or illegible over time.

Risk of injury due to illegible symbols.

- Always make sure that safety, warning, and operating notes are legible.
- Replace damaged safety symbols and signs.

The safety symbols on the gear unit must be observed. They have the following meaning:

Safety symbols	Meaning
	Indicates the **bleeder screw**.
	Indicates the **oil filling location**. Also serves as proper venting during the oil change.
	Indicates the **oil drain**.
	Indicates the position of the **breather**. Serves to avoid mistaking the oil measuring position for the venting position.
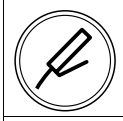	Indicates the positions for **relubrication** and makes it easier to find the locations to be lubricated. Helps avoid bearing damage.
	Indicates the **water supply** and serves to locate the connection option.
	Indicates the **water return** and serves to locate the connection option.
	Indicates the **oil supply** and serves to locate the connection option.
	Indicates the **oil return** and serves to locate the connection option.
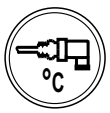	Indicates the position of the **temperature sensor** / **temperature switch.**
	Indicates the **grease drain plug** and serves to locate the grease drain. Helps avoid bearing damage.

Safety symbols	Meaning
	Helps avoid errors caused by lack of understanding. Read the information in the operating instructions.
	For pivoted mounting positions, this symbol on the information sign indicates the mounting position of the gear unit for **checking the oil**.
	Caution: Burns caused by hot surface.
	Caution: Removing the oil dipstick during operation may result in damage to the gear unit.
	Caution: Risk of burns due to hot gear oil.

After startup, you may remove the following labels from the gear unit.

Meaning
The brake is not set at the factory.

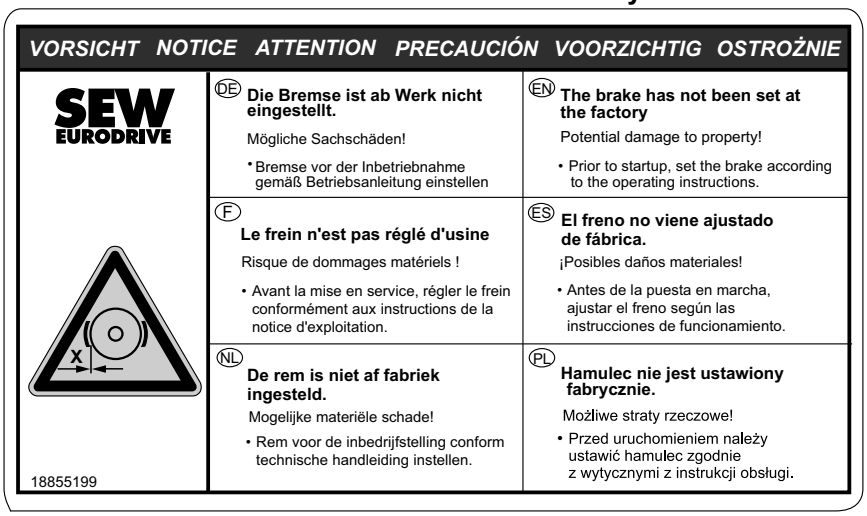

Meaning

The coupling is supplied without grease.

VORSICHT NOTICE ATTENTION PRECAUCIÓN VOORZICHTIG OSTROŻNIE		
SEW EURODRIVE  18977405	(DE) **Kupplung wird ohne Fett geliefert.** Mögliche Sachschäden! • Vor der Inbetriebnahme Kupplung mit Fett befüllen.	(EN) **Coupling delivered without grease** Possible damage to property. • Fill coupling with grease prior to startup.
	(F) **L'accouplement est livré sans graisse.** Risque de dommages matériels ! • Avant la mise en service, remplir l'accouplement de graisse.	(ES) **El acoplamiento se suministra sin grasa.** ¡Posibles daños materiales! • Llenar el acoplamiento con grasa antes de la puesta en marcha.
	(NL) **Koppeling wordt zonder vet geleverd.** Mogelijke materiële schade! • Koppeling vóór de inbedrijfstelling met vet vullen.	(PL) **Sprzęgło dostarczane jest bez smaru.** Możliwe szkody materialne! • Przed uruchomieniem należy wypełnić sprzęgło smarem.

The coupling is supplied without oil.

VORSICHT NOTICE ATTENTION PRECAUCIÓN VOORZICHTIG OSTROŻNIE		
SEW EURODRIVE  18977413	(DE) **Kupplung wird ohne Öl geliefert.** Mögliche Sachschäden! • Vor der Inbetriebnahme Kupplung mit Öl befüllen.	(EN) **Coupling delivered without oil** Possible damage to property. • Fill coupling with oil prior to startup.
	(F) **L'accouplement est livré sans huile.** Risque de dommages matériels ! • Avant la mise en service, remplir l'accouplement d'huile.	(ES) **El acoplamiento se suministra sin aceite.** ¡Posibles daños materiales! • Llenar el acoplamiento con aceite antes de la puesta en marcha.
	(NL) **Koppeling wordt zonder olie geleverd.** Mogelijke materiële schade! • Koppeling vóór de inbedrijfstelling met olie vullen.	(PL) **Sprzęgło dostarczane jest bez oleju.** Możliwe szkody materialne! • Przed uruchomieniem należy wypełnić sprzęgło olejem.

The gear unit is protected against corrosion with VCI.

VORSICHT NOTICE ATTENTION PRECAUCIÓN VOORZICHTIG OSTROŻNIE		
SEW EURODRIVE  18977421	(DE) **Getriebe ist mit VCI rostgeschützt. Nicht öffnen!** Mögliche Sachschäden! • Vor der Inbetriebnahme Vorarbeiten gemäß Betriebsanleitung durchführen. • Keine offene Flamme!	(EN) **Gear unit with VCI corrosion protection. Do not open!** Potential damage to property! • Prior to startup, perform preliminary work according to operating instructions • No open flames!
	(F) **Réducteur protégé contre la corrosion avec VCI. Ne pas ouvrir** Risque de dommages matériels ! • Avant la mise en service, réaliser les travaux préliminaires indiqués dans la notice d'exploitation. • Pas de flammes ouvertes !	(ES) **Reductor está protegido con VCI contra la corrosión. ¡No abrir!** ¡Posibles daños materiales! • Antes de la puesta en marcha, efectuar los trabajos preparatorios según las instrucciones de funcionamiento. • No debe haber fuego abierto.
	(NL) **Tandwielkast is met VCI tegen corrosie beschermd. Niet openen!** Mogelijke materiële schade! • Vóór de inbedrijfstelling voor-bereidingen conform technische handleiding uitvoeren. • Geen open vuur!	(PL) **Przekładnia zabezpieczona jest przed korozją za pomocą środka VCI. Nie otwierać!** Możliwe straty rzeczowe! • Przed uruchomieniem należy przeprowadzić czynności przygoto-wawcze zgodnie z informacjami zawartymi w instrukcji obsługi! • Unikać otwartych płomieni!

Meaning
The gear unit is supplied without oil. 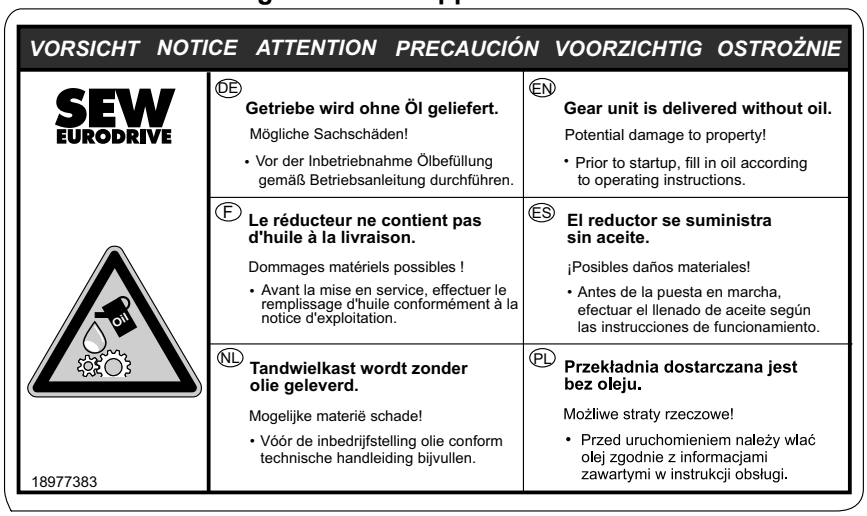

2.7 Symbols on the packaging

The symbols on the packaging must be observed. They have the following meaning:

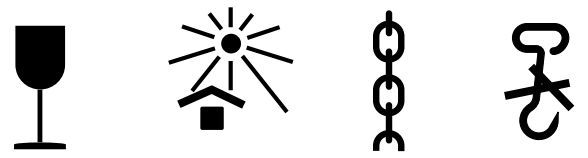



1811486091

2.8 Transport

2.8.1 General information



⚠ WARNING

Suspended loads can fall.

Severe or fatal injuries.

- Do not stand under the suspended load.
- Secure the danger zone.
- Use suitable, sufficiently rated and undamaged handling equipment.
- Consider the gear unit dimensions, the center of gravity and the weight that has to be moved when selecting lifting equipment or crane (see dimension drawing).



⚠ CAUTION

Risk of slipping of unsecured mount-on components, e.g. keys.

Potential risk of crushing due to falling parts.

- Secure the mount-on components.



⚠ CAUTION

Risk of slipping due to lubricant leaking from damaged seals.

Minor injuries.

- Check the gear unit and mount-on components for leaking lubricant.



NOTICE

Improper transport can damage the gear unit.

Possible damage to property.

- Observe the following notes.

- Immediately upon delivery, inspect the shipment for any damage that may have occurred in transit. Inform the shipping company immediately about any damage. It may be necessary to preclude startup.
- The weight of the gear unit (without oil) is indicated on the nameplate or on the dimension sheet. Adhere to the loads and regulations given there.
- If possible, transport the gear unit without oil fill. If this is not possible, note that the weight indicated on the nameplate refers only to the gear unit without oil fill, and replace the breather with a screw plug.
- Transport the gear unit in such a way that the lifting gear is tensioned only vertically.
- The gear unit must be transported in a manner that prevents damage to the gear unit, and mount-on components. For example, impacts against exposed shaft ends can damage the gear unit.

- Use only the prescribed suspension points to transport the gear unit [1] (see order documents). The load suspensions of the motor or mount-on components are provided for stabilization purposes only.

The following figure illustrates how to transport the gear unit.

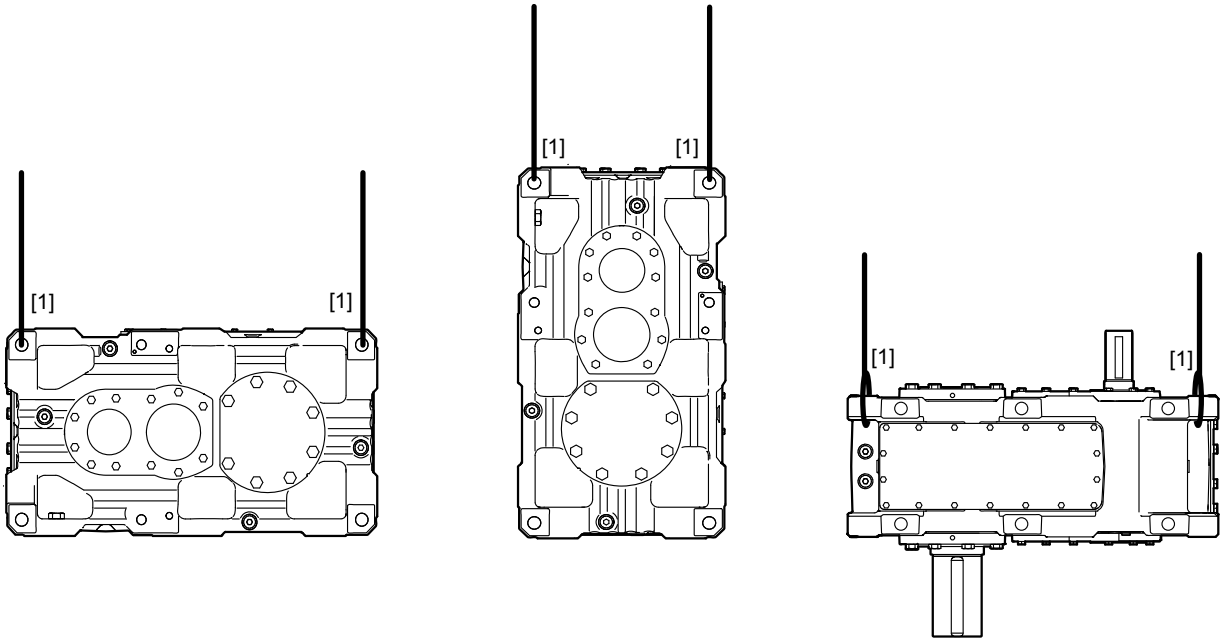

6045845259

2.8.2 Gear units with motor adapter

Gear units with motor adapter may only be transported using lifting cables/chains [2] or lifting straps [1] at an angle from 90° (vertical) up to 70° from the horizontal. The eyebolts on the motor must not be used for transport.

The following figures illustrate how to transport the gear unit.

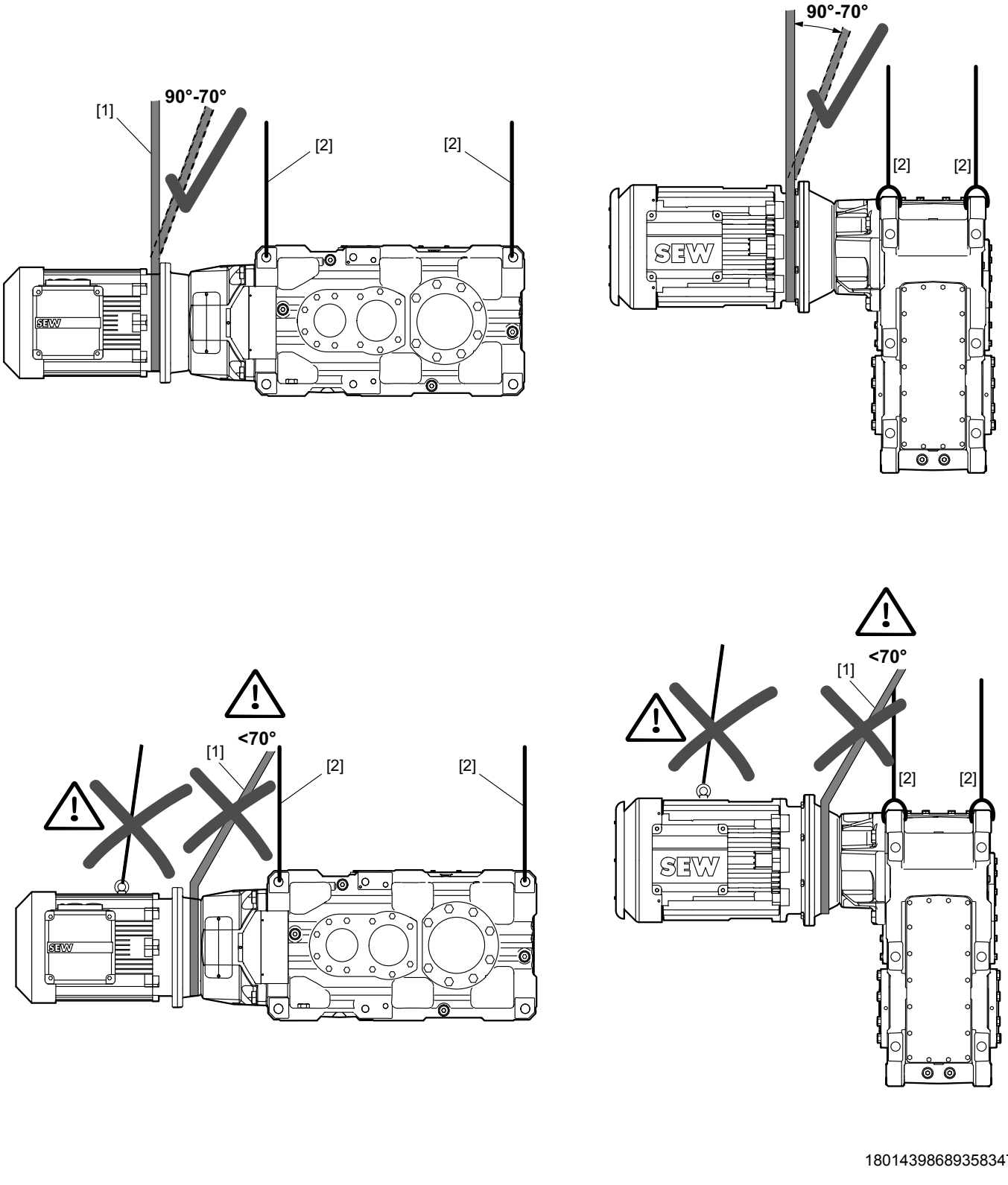

18014398689358347

2.8.3 Gear units on swing base/base plate

Gear units on a swing base/base plate may only be transported using vertically tensioned lifting cables [1] or chains.

The following figures illustrate how to transport the gear unit.

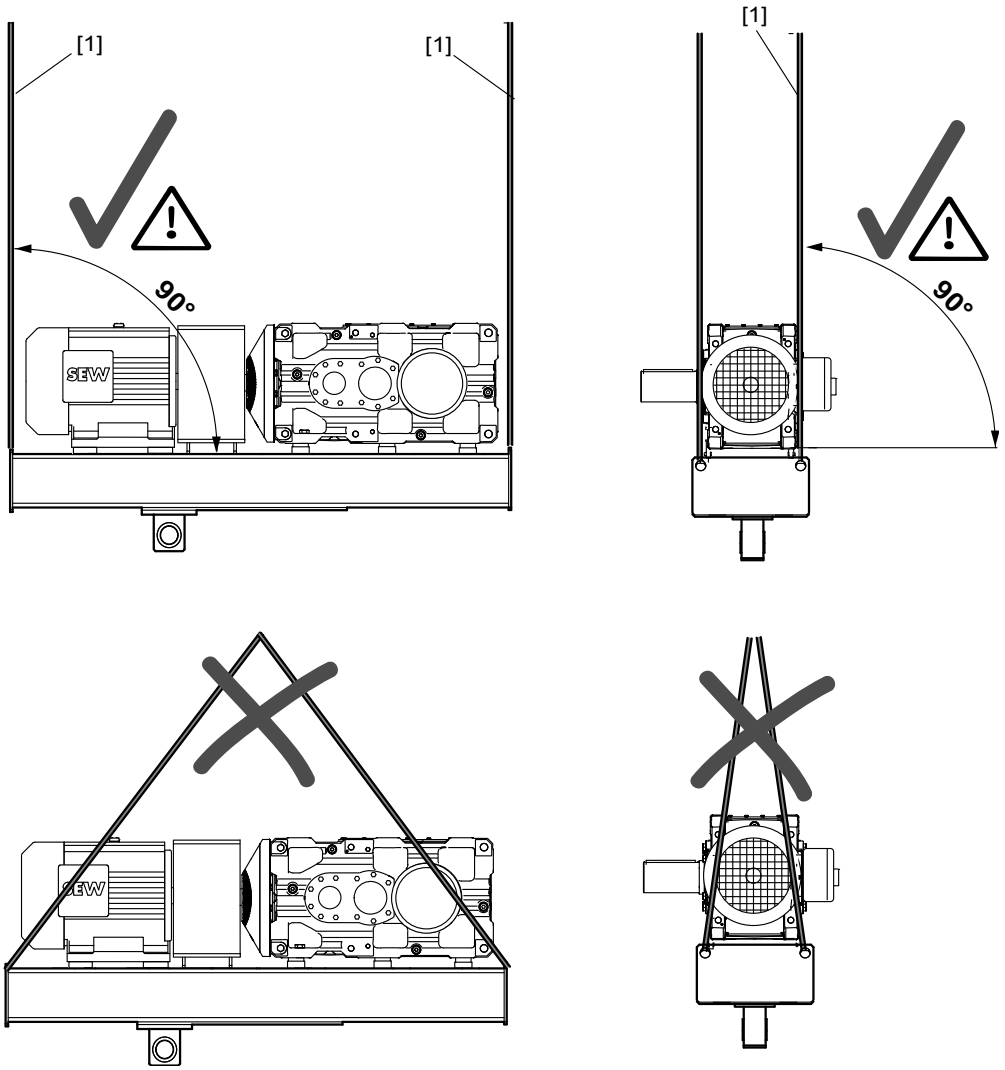

181714571

2.8.4 Gear units with V-belt drive

Gear units with a V-belt drive must only be transported using lifting straps [1] and cables [2] at an angle of 90° (vertical). The eyebolts on the motor must not be used for transport.

The following figures illustrate how to transport the gear unit.

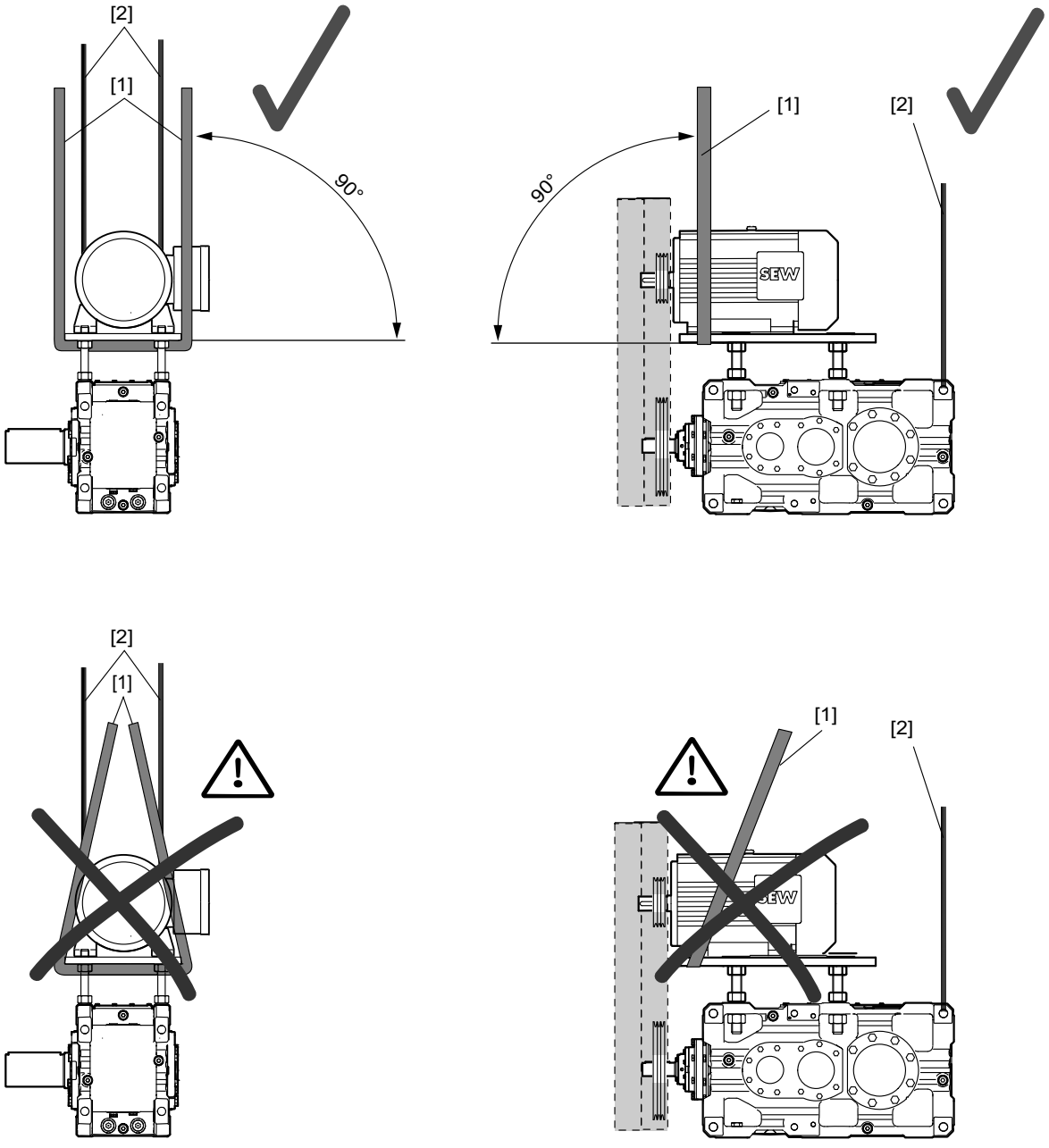

18014399489006731

2.9 Storage and transport conditions

The gear units can be provided with the following protection and packaging types depending on the storage and transport conditions.

2.9.1 Internal conservation

Standard corrosion protection

After the test run, the test oil fill is drained out of the gear unit. The remaining oil film protects the gear unit against corrosion for a limited period of time.

Long-term corrosion protection

After the test run, the test oil fill is drained out of the gear unit and the interior space is filled will a vapor phase inhibitor. The breather filter is replaced by a screw plug and enclosed with the gear unit.

2.9.2 Exterior corrosion protection

The following measures are taken for exterior corrosion protection:

- Anti-corrosion agent is applied to bare, non-painted functional surfaces of shafts, flanges, mounting and foot surfaces of the housing. Remove it only using an appropriate solvent which is not harmful to the oil seal.
- Small spare parts and loose pieces, such as bolts, nuts, etc., are packed in corrosion protection plastic bags (VCI corrosion protection bags).
- Threaded holes and blind holes are covered by plastic plugs.
- If the gear unit is stored longer than 6 months, regularly check the protective coating of unpainted areas as well as the paint coating. Areas in which the protective coating and/or painting has been damaged may have to be repainted.

2.9.3 Packaging

Standard packaging

The gear unit is delivered on a pallet without cover.

Application: Land transport

Long-term packaging

The gear unit is delivered in a wooden box that is also appropriate for sea transport.

Application: Sea transport and/or for long-term storage

2.9.4 Storage conditions



NOTICE

Improper storage may result in damages to the gear unit.

Possible damage to property.

- During storage up to startup, the gear unit must be stored in a shock-free manner to prevent damage to the rolling bearing races.
- The output shaft must be rotated at least one full rotation every 6 months so that the position of the rolling elements in the bearings of the input and output shafts changes.



INFORMATION

The gear units are delivered without oil as standard; different protection systems are required depending on the storage period and storage conditions as shown in the table below.

Corrosion protection + packaging	Storage location	Storage duration
Standard corrosion protection + standard packaging	Under roof and enclosed at constant temperature and atmospheric humidity (5 °C < ϑ < 60 °C, < 50 % relative humidity). No sudden temperature fluctuations. Controlled ventilation with filter (free from dust and dirt). No aggressive vapors, no shocks.	Max. 6 months with intact surface protection.
Long-term corrosion protection + standard packaging	Under roof and enclosed at constant temperature and atmospheric humidity (5 °C < ϑ < 60 °C, < 50 % relative humidity). No sudden temperature fluctuations. Controlled ventilation of the storage location with filter (free from dust and dirt). No aggressive vapors, no shocks.	Max. 3 years with regular inspection and checking for intactness.
Long-term corrosion protection + long-term packaging	With roof, protected against rain and shocks.	Max. 3 years with regular inspection and checking for intactness.



INFORMATION

If stored in tropical zones, provide for sufficient protection against insect damage. Contact SEW-EURODRIVE for differing requirements.

3 Structure of the Basic Gear Unit

INFORMATION

The basic gear unit comprises: Gear unit with mounted options, such as oil heater, water cooling cover, water cooling cartridge, oil expansion tank, etc.

The cooling systems OAC, OAP, OWC, OWP, ONP are not part of the basic gear unit.

3.1 Nameplate

The following example shows the structure of the nameplate. The oil quantity specified on the nameplate refers only to the basic unit.

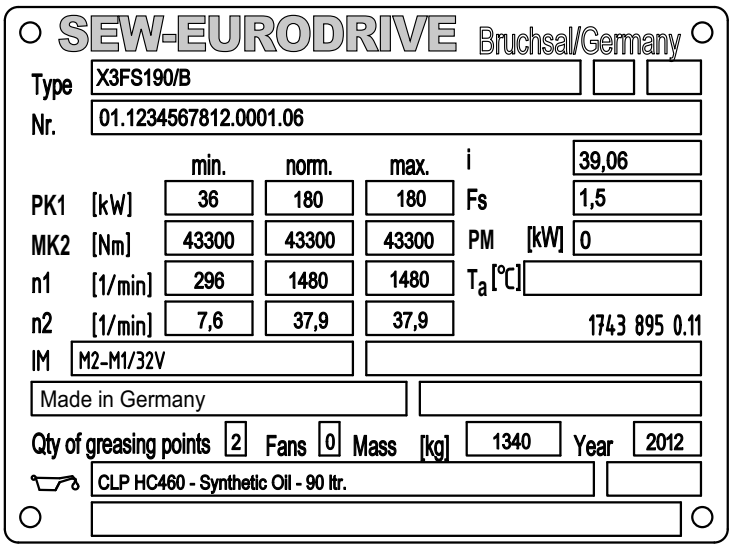

18014398928127499

Type		Type designation
No. 1		Serial number
P_{K1}	[kW]	Operating power on the input shaft (HSS)
M_{K2}	[Nm]	Gear unit output torque
n_1	[rpm]	Input speed (HSS)
n_2	[rpm]	Output speed (LSS)
norm.		Normal operating point
min.		Minimum operating point
max		Maximum operating point
i		Exact gear unit ratio
F_S		Service factor
P_{Mot}	[kW]	Nominal motor power
T_a°C		Deviation from standard temperature range (−20 °C to +40 °C)
Mass	[kg]	Weight of the gear unit
Qty of greasing points		Number of regreasing points
Fans		Number of installed fans
		Oil grade and viscosity class / oil quantity
Year		Year of manufacture
IM		Mounting position and mounting surface

3.2 Type designations

3.2.1 Gear unit

The following example shows the structure of the type designation:

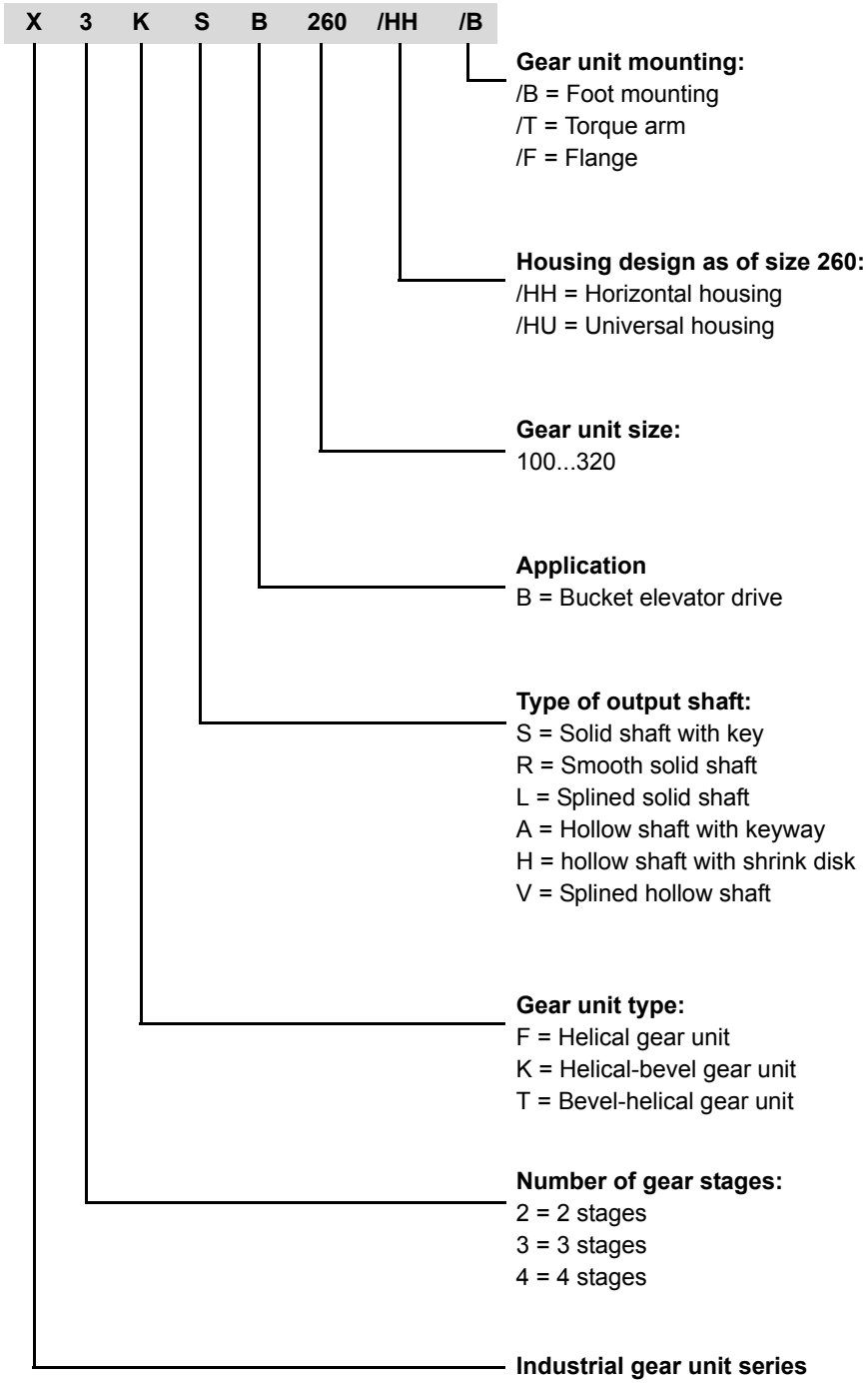

3.2.2 Oil supply systems

The gear unit can be equipped with an oil supply system for cooling and lubrication purposes. The following example shows the structure of the type designation:

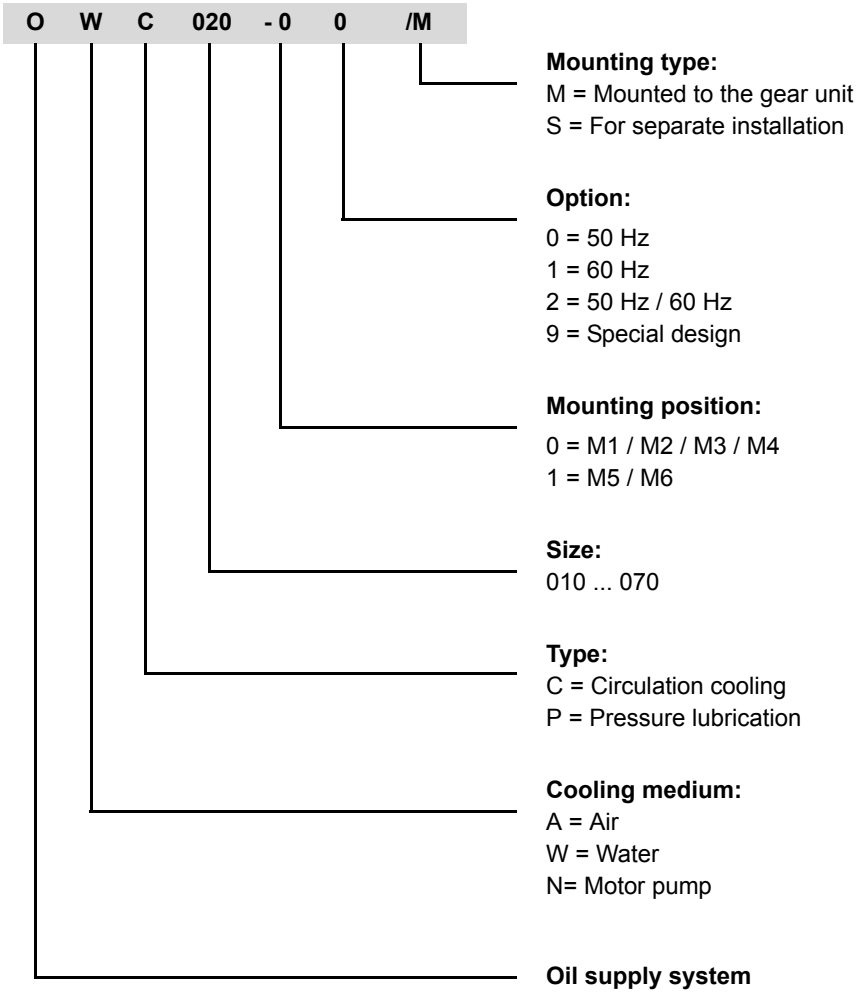

3.2.3 Flange couplings

The following example shows the structure of the type designation:

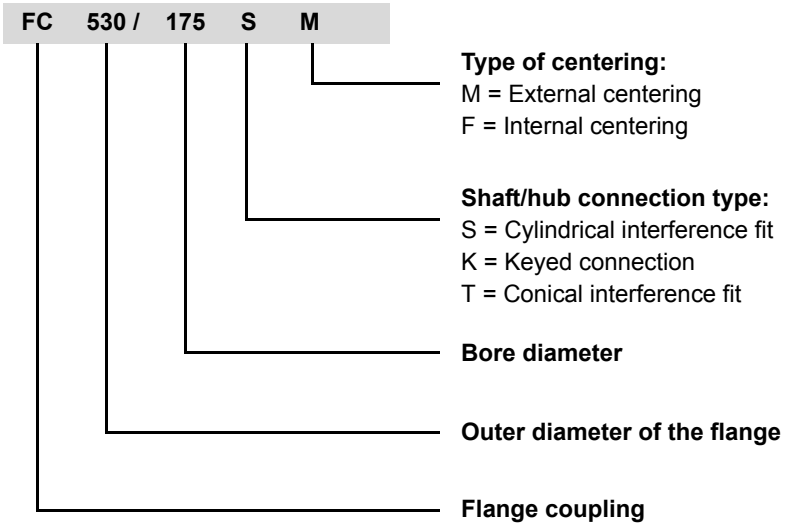

3.2.4 Abbreviations for optional accessories

The table shows the abbreviations used and what they mean.

Abbreviation	Meaning
/BF	Base frame
/BS	Backstop
/BSL	Torque-limited backstop
/CCV	Water cooling cover
/CCT	Water cooling cartridge
/F	Mounting flange
/FC	Flange coupling
/FAN	Fan
/FAN-ADV	Fan, Advanced variant
/ET	Oil expansion tank
/HH	Horizontal housing
/HU	Universal housing
/HSST	Through-going input shaft
/LSST	Through-going output shaft
/MA	Motor adapter
/SB	Swing base
/SEP	Shaft end pump
/T	Torque bracket
/OAC	Circulation cooling oil-air cooler with motor pump
/OWC	Circulation cooling oil-water cooler with motor pump
/OAP	Circulation cooling oil-air cooler with pressure lubrication and motor pump
/OWP	Circulation cooling oil-water cooler with pressure lubrication and motor pump
/ONP	Pressure lubrication and motor pump
/OD	Oil dipstick
/ODV	Oil drain valve
/OLG	Oil level glass
/OH	Oil heater
/VBD	V-belt drives

All options are part of the type designation except for mounting flange, torque arm, horizontal and universal housing.

3.3 Mounting positions

The mounting position defines the spatial orientation of the gear unit housing and is designated **M1...M6**.

The table below shows the mounting positions.

	Standard mounting position (shown in gray in the illustration)	Alternative mounting position
Horizontal gear unit	M1	M3
Vertical gear unit	M5	M6
Upright gear unit	M4	M2

With the alternative mounting positions, there might be limitations regarding certain options. Contact SEW-EURODRIVE in this case.

9007200591789067

X.T..

Applicable for
gear unit sizes X100 to X210

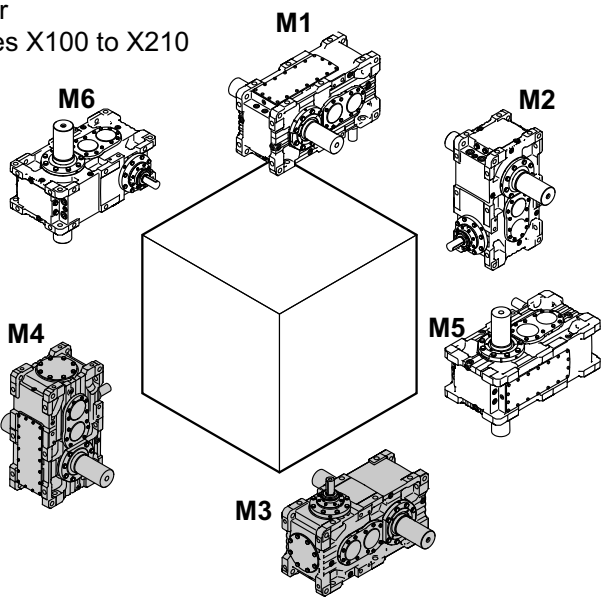

Applicable for
gear unit sizes X220 to X320

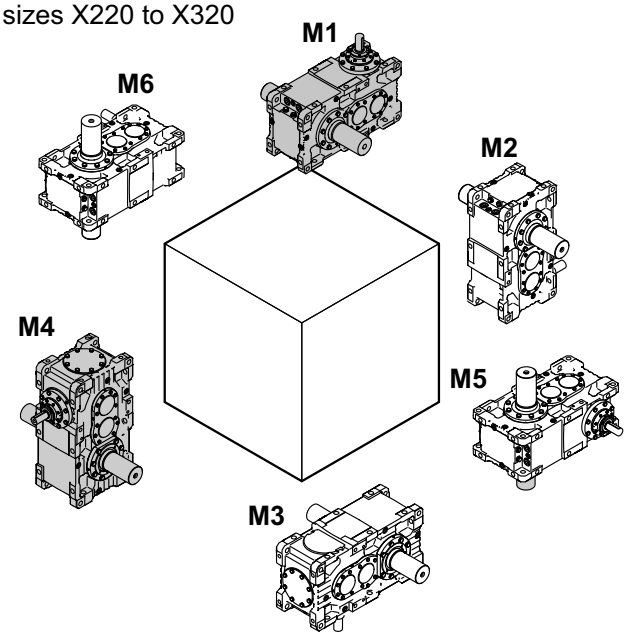

2783125515

3.4 Mounting surfaces

The mounting surface is defined as the surface of a gear unit with

- foot mounting (X.... /B) or
- flange mounting (X.... /F)

on which the gear unit is mounted.

6 different mounting surfaces are defined (designation F1…F6)

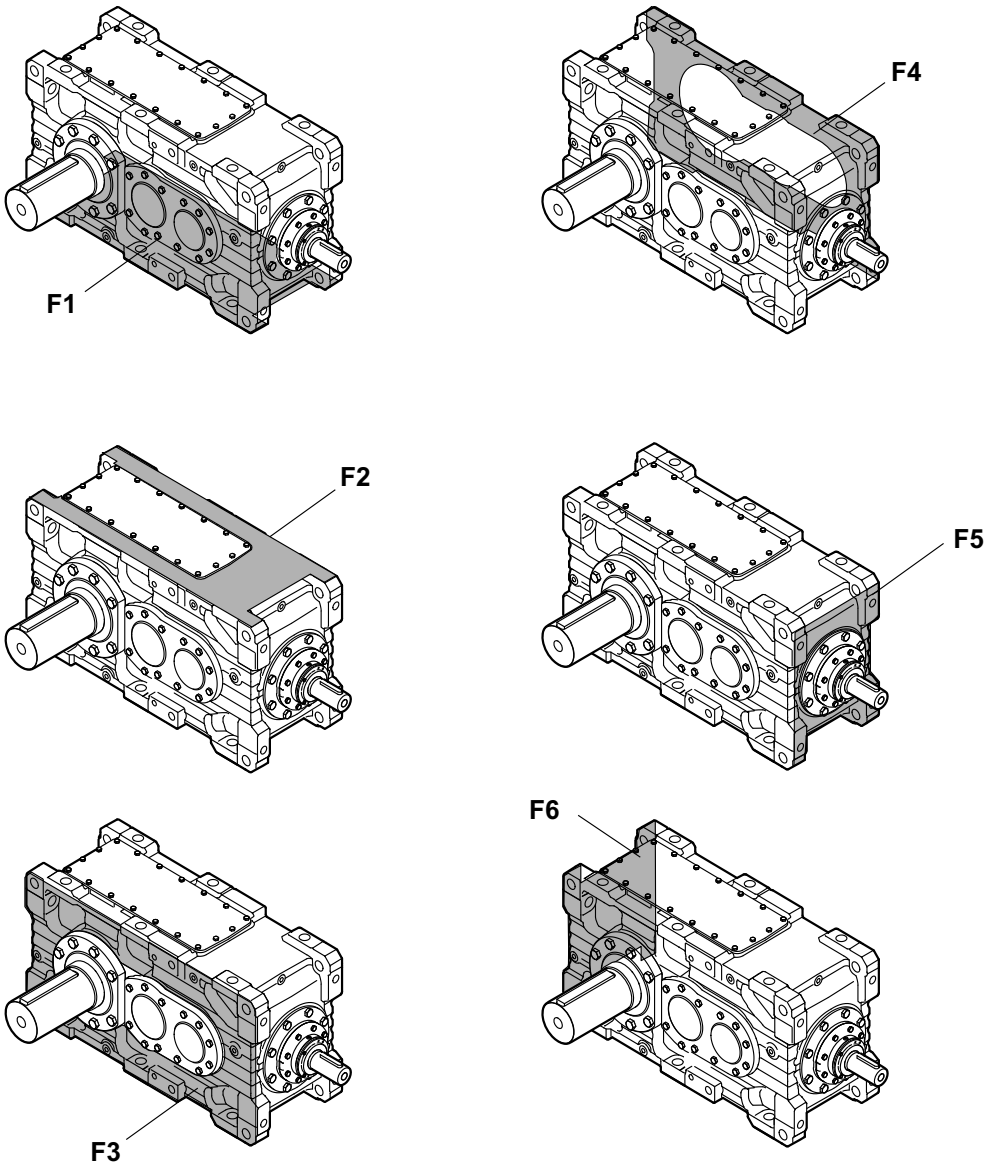

179879691

3.5 Shaft positions

The shaft positions (**0 - 6**) shown in the following figures apply to solid and hollow output shafts. For other shaft positions or gear units with backstop, contact SEW-EURODRIVE.

3.5.1 X.F..

Shaft positions X.FS..	Shaft position X.FH.. / X.FA..
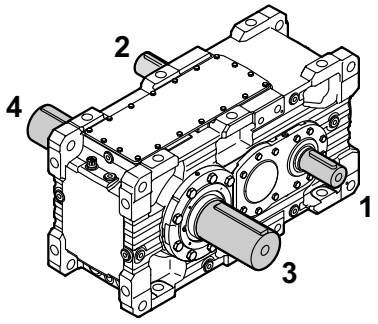 9007199435036427	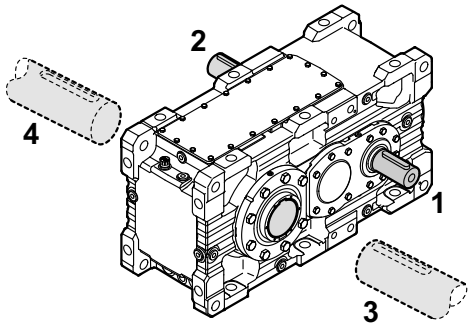 9007199435034763

3.5.2 X.K..

Shaft position X.KS..	Shaft position X.KH.. / X.KA..
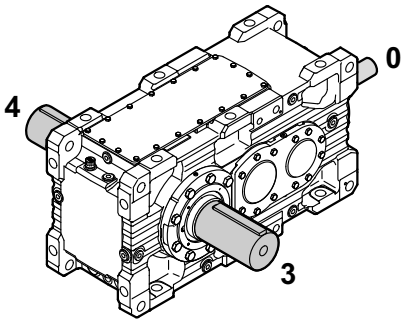 18014398689779083	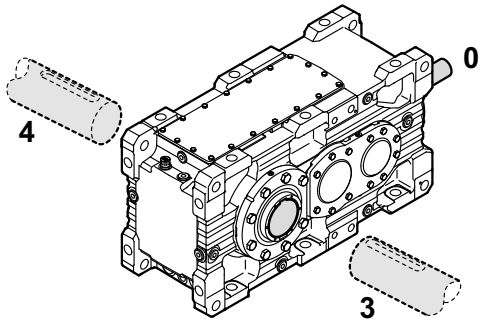 18014398689780747

3.5.3 X.T..

Sizes X100 to X210

Shaft position X.TS..	Shaft position X.TH.. / X.TA..
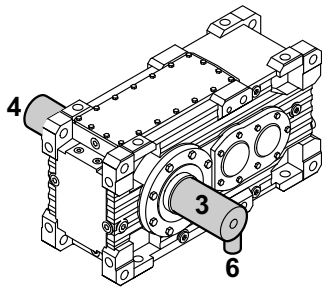 4656409483	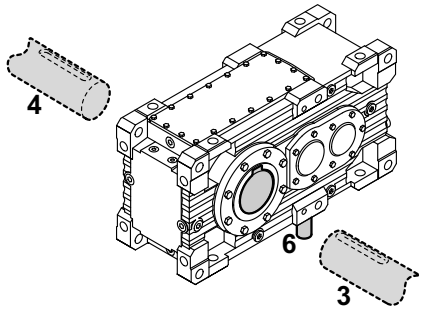 4656407307

Sizes X220 to X320

Shaft position X.TS..	Shaft position X.TH.. / X.TA..
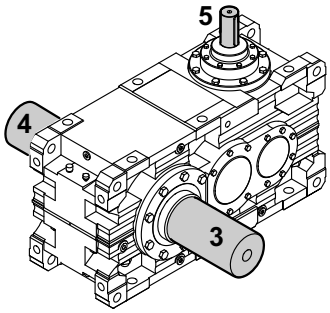 4656456971	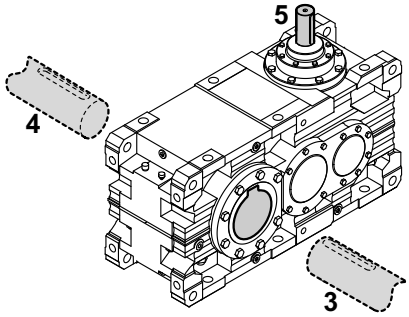 4656459147

3.6 Mounting positions and standard mounting surfaces

A certain standard mounting surface is assigned to each mounting position:

INFORMATION

- The mounting position and/or mounting surface must not differ from the order.
- A deviation of ±1° is permitted.
- Other mounting surfaces are possible in combination with a certain mounting position. Refer to the order-specific drawing.

The following figure provides an overview of mounting positions and standard mounting surfaces.

X.F..

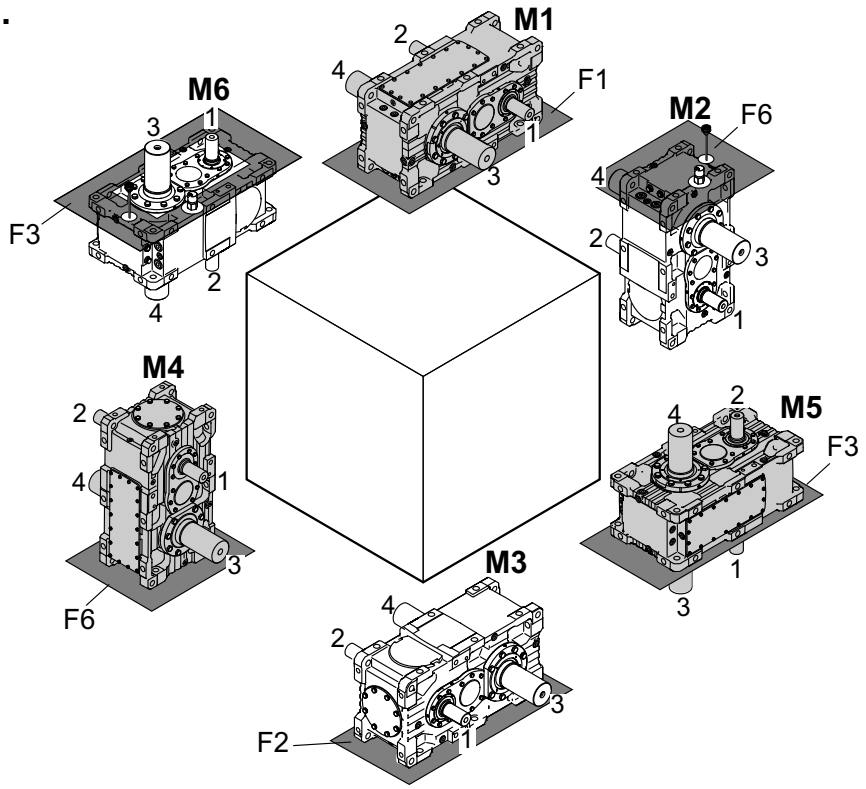

X.K..

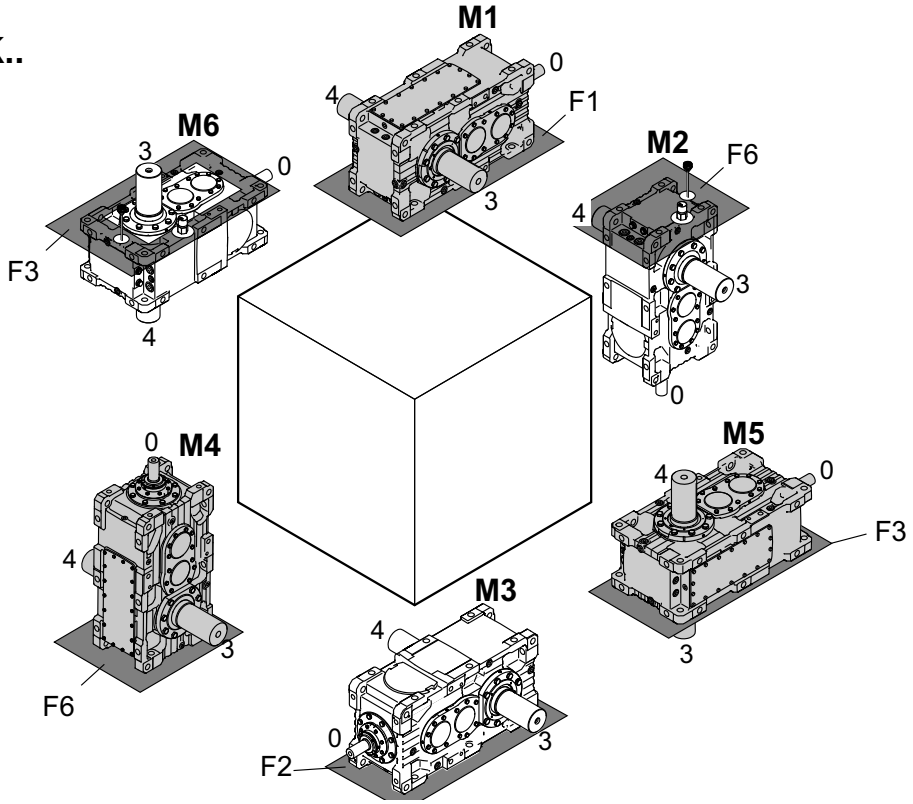

18014399847228555

INFORMATION

If you install the gear unit in mounting position M2, make sure that the customer's mounting structure leaves enough room for the breather valve and the oil dipstick.

Bevel-helical gear units X.T..

Valid for sizes X100 to X210

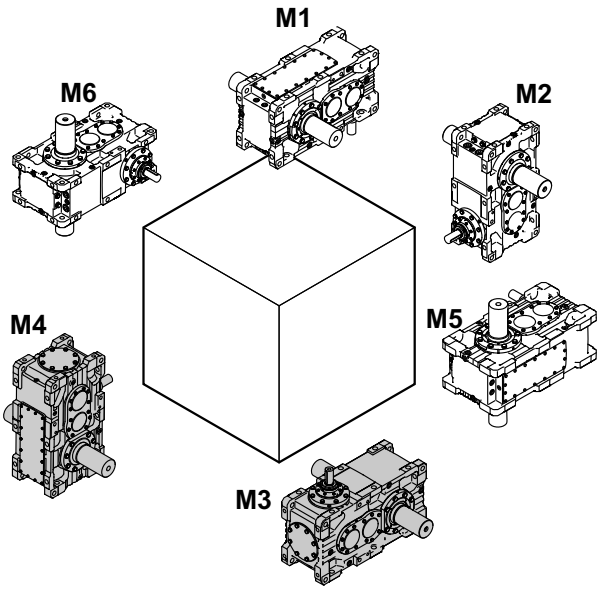

Valid for sizes X220 to X320

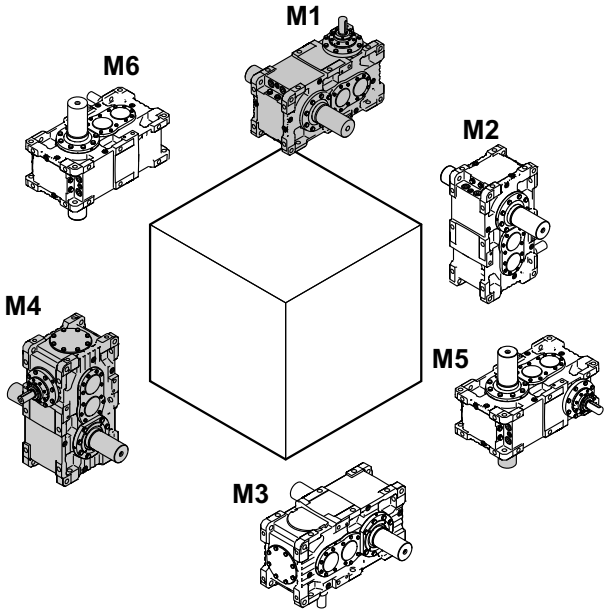

INFORMATION

If you install the gear unit in mounting position M2, make sure that the customer's mounting structure leaves enough room for the breather valve and the oil dipstick.

3.7 Fixed and variable pivoted mounting positions

Mounting positions deviating from the standard are differentiated between **fixed** and **variable** pivoted mounting positions.

INFORMATION

- Fixed and variable pivoted mounting positions are only possible after consultation with SEW-EURODRIVE. Observe the order documents, such as the dimension sheet.
- Fixed and variable pivoted mounting positions might involve restrictions concerning accessories and technical data. Also, delivery times might be longer. Consult SEW-EURODRIVE.

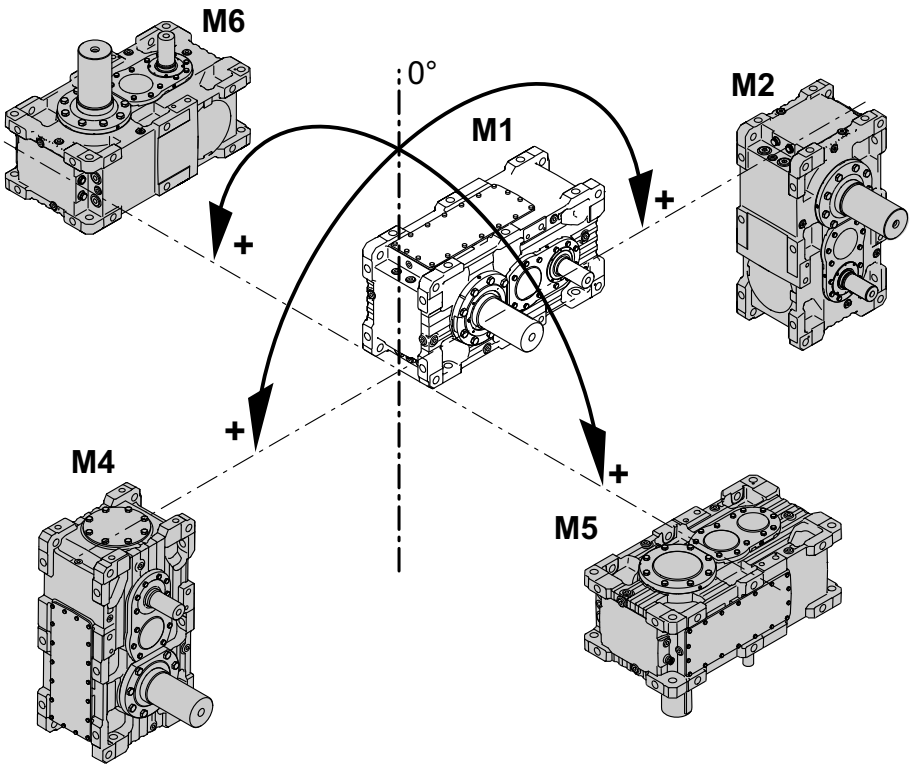

8021651467

3.7.1 Fixed pivoted mounting position

Definition: Gear units with fixed pivoted mounting position have a fixed mounting position that differs from the standard.

This means the gear unit does not change its mounting position during operation.

Example: The type designation is set up as follows:

M1-M4/9°

M1 = Initial mounting position
M4 = Pivoting direction
9° = Fixed pivoting angle

Pivoted from mounting position M1 to M4 by 9°.

This results in the following fixed pivoted mounting position:

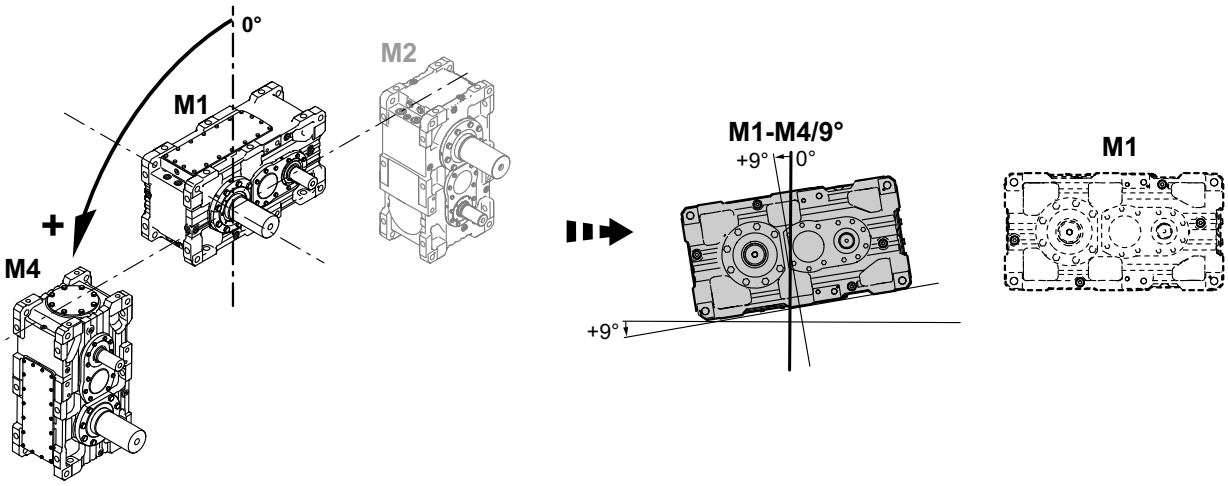

8021656843

The oil level is checked in the selected fixed pivoted mounting position.

The fixed pivoted mounting position is shown on the nameplate as follows:

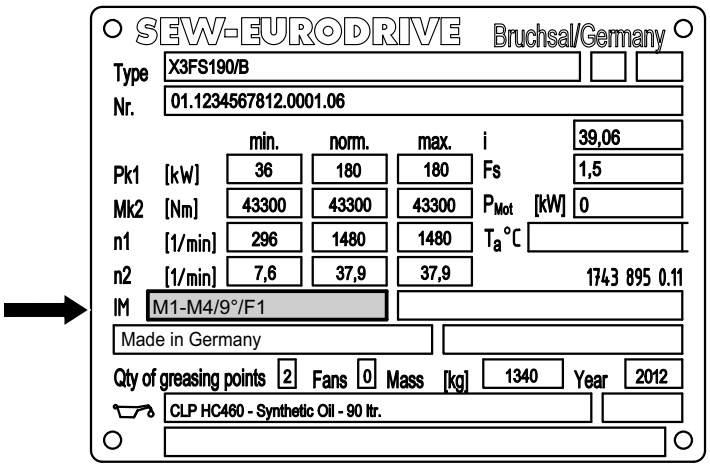

68021658507

3.7.2 Variable pivoted mounting position

Definition

Gear units with variable mounting position can change the mounting position **variably** during operation within the specified max./min. range.

Example

The gear unit is operated in variable pivoted mounting position M1 to M6 = 9° and M1 to M5 = 12°.

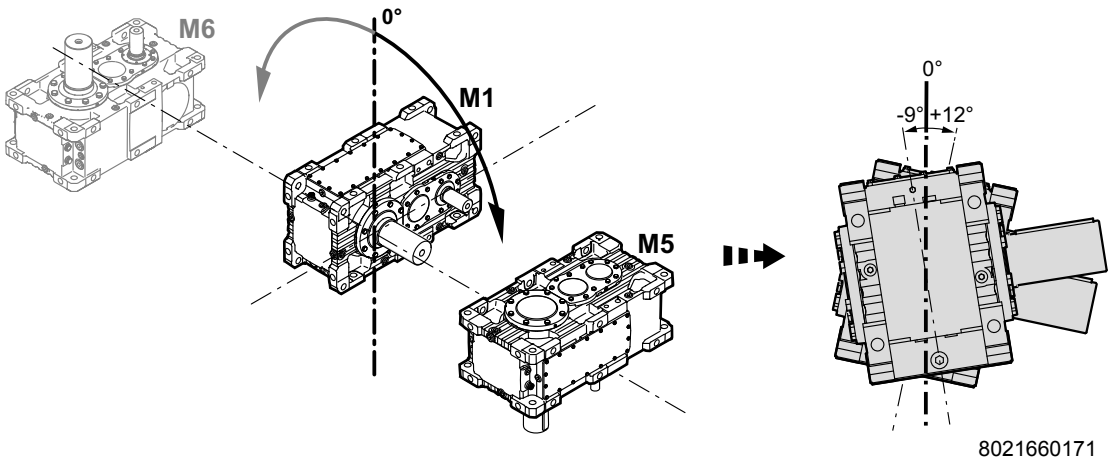

Step 1:

The largest pivoting angle determines the positive pivoting direction (12° > 9°). In this example, this is 12° towards M5.

12° → from M1 to M5, pivoted by +12°

9° → from M1 to M5, pivoted by –9°

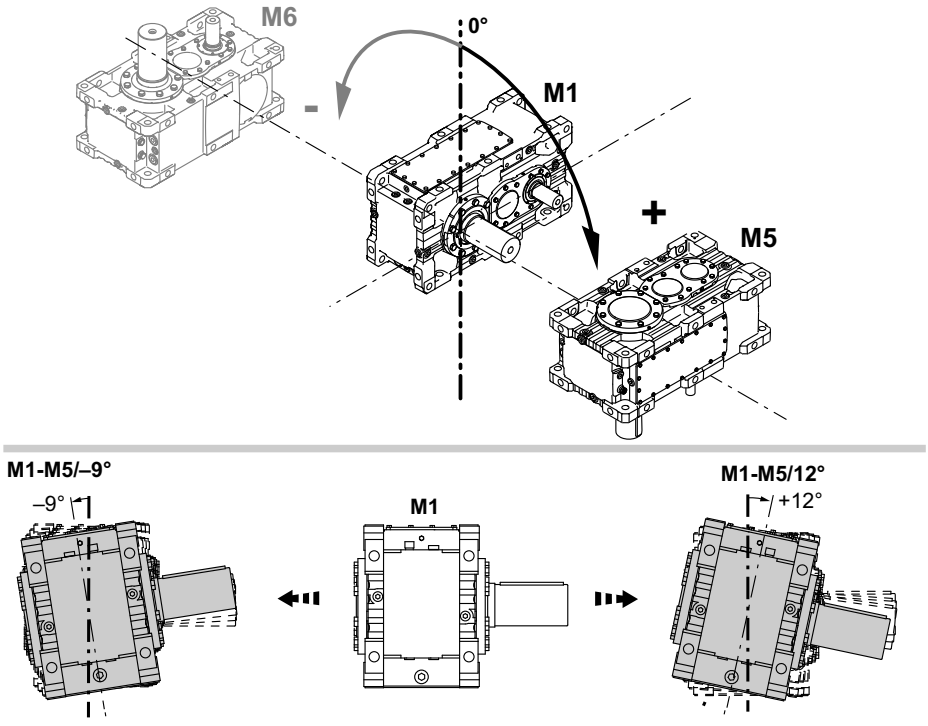

The type designation for this example is:

M1-M5/–9°...12°

M1 = initial mounting position
M5 = pivoting direction
12° = pivoted from M1 to M5 by 12°
-9° = pivoted from M1 to M5 by –9° (= pivoted from M1 to M6 by 9°)

The variable pivoted mounting position is shown on the nameplate as follows:

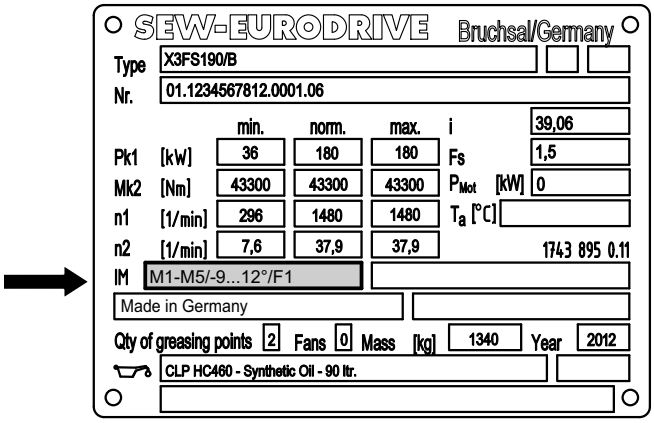

8021668875

Step 2:

For variable pivoted mounting positions, the customer must determine the pivoting angle in which the oil level is checked.

An additional nameplate is used to clearly indicate the oil check angle. This nameplate lists the mounting position for the oil level check.

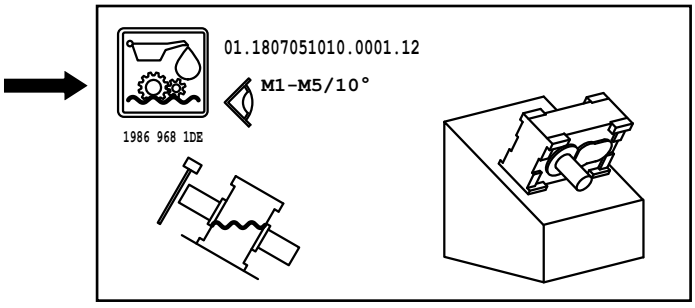

8021670539

3.7.3 Combination of variable and fixed pivoted mounting positions

Fixed and variable pivoted mounting positions can be combined.

Example:

The following example shows a combination of fixed and variable pivoted mounting position.

The type designation is set up as follows:

M1-M4/9° (fixed pivoted mounting position)
M1 = initial mounting position
M4 = pivoting direction
9 ° = fixed pivoting angle

M1-M5/–9°...12° (variable pivoted mounting position)
M1 = initial mounting position
M5 = pivoting direction
12 ° = 12 ° from M1 to M5
–9 ° = –9 ° from M1 to M5 (= 9 ° from M1 to M6)

The variable and fixed pivoted mounting position is shown on the nameplate as follows:

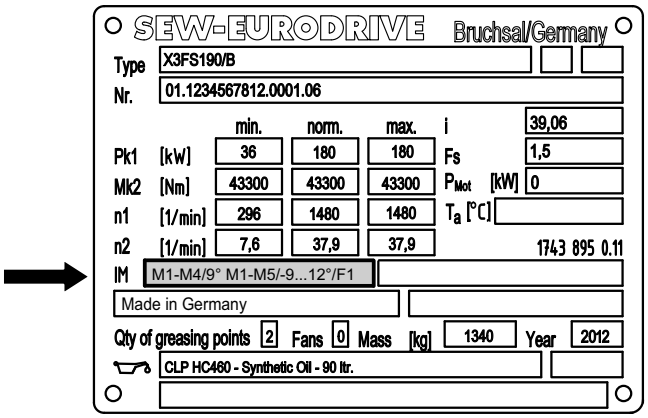

8021676939

When combining fixed and variable pivoted mounting position, the customer must determine the variable pivoting angle in which the oil level is checked. The fixed angle for the oil level check is already defined.

The gear unit has an additional nameplate to ensure correct oil level checks. This nameplate lists the mounting position for the oil level check.

In this example, the operator checks the oil level at M1-M4/9° M1-M5/10°.

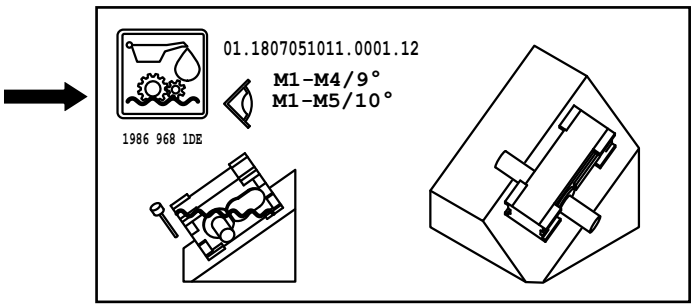

8021678603

3.8 Direction of rotation dependencies

INFORMATION

The gear unit can be operated in both directions of rotation. An exception are gear units with backstop.

The following tables show the direction of rotation dependencies between input and output shafts. The gear units as well as the position of the backstop are schematically shown as the solid shaft version.

3.8.1 X.F..

Shaft position	14	23	13 [1]	24 [1]
End gear position	3	4	3	4
X2F...	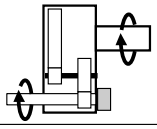	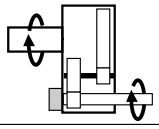	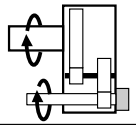	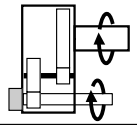
X3F...	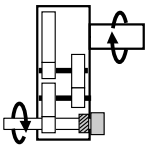	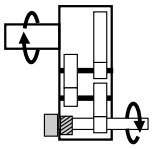	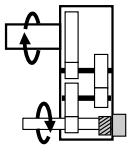	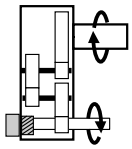
X4F...	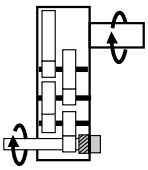	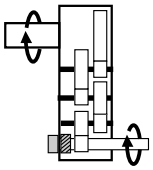	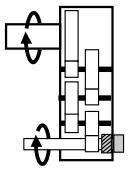	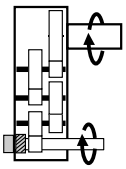

Shaft position	134 [1]	243 [1]	213 *	124 *	1234 * [1]
End gear position	3	4	4	3	3
X2F...	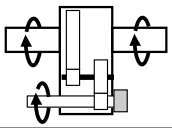	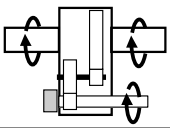	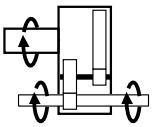	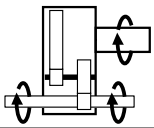	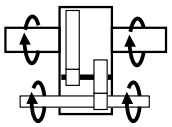
X3F...	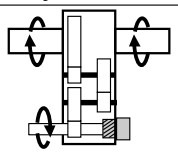	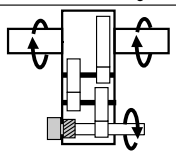	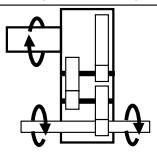	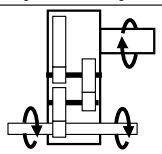	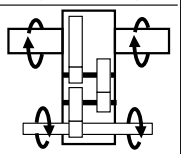
X4F...	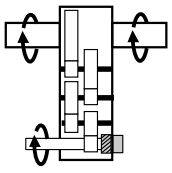	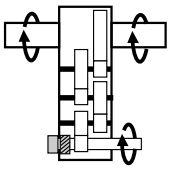	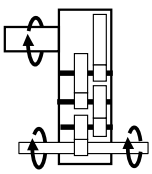	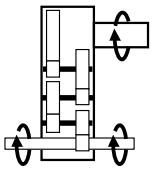	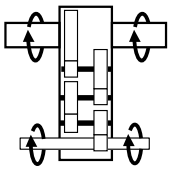

= Position of the backstop

= Alternative backstop position (depending on size and gear ratio)

* = Consult SEW-EURODRIVE when using a backstop

1) Note the restrictions regarding external forces on the LSS

3.8.2 X.K...

Standard

Shaft position	03	04	034 [1]	043 [1]
End gear pos.	4	3	3	4
X2K...	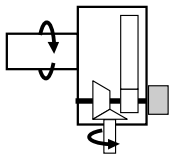	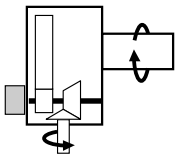	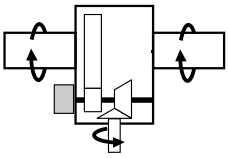	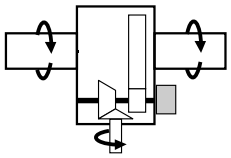
X3K...	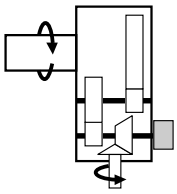	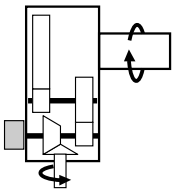	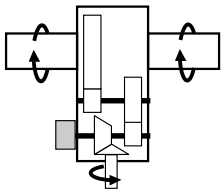	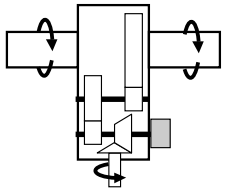
X4K...	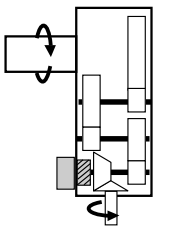	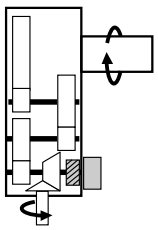	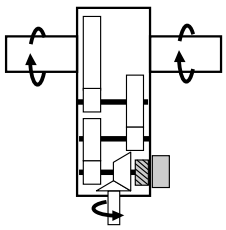	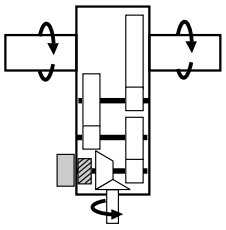

Direction of rotation reversal

Shaft position	03 [1]	04 [1]
End gear pos.	3	4
X2K...	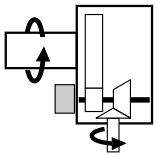	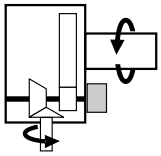
X3K...	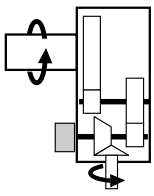	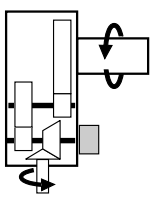
X4K...	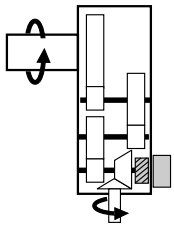	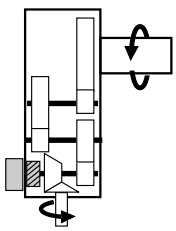

= Position of the backstop

= Alternative backstop position (depending on size and gear ratio)

* = Consult SEW-EURODRIVE when using a backstop

1) Note the restrictions regarding external forces on the LSS

3.8.3 X.T...

Standard

Shaft pos.	63	64	634 [1]	643 [1]
End gear pos.	4	3	3	4
X3T...	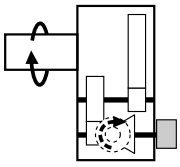	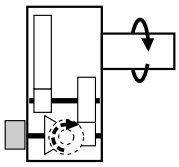	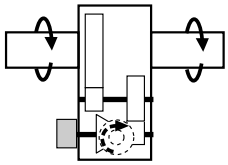	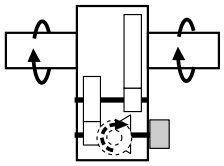
X4T...	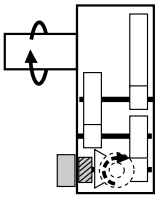	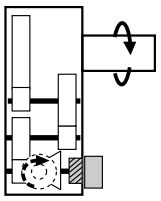	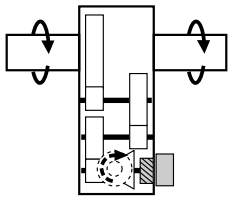	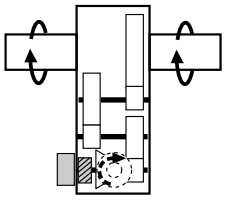

Shaft pos.	53	54	534 [1]	543 [1]
End gear pos.	4	3	3	4
X3T...	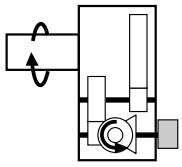	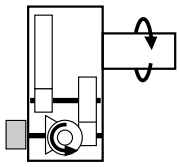	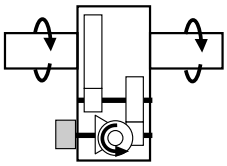	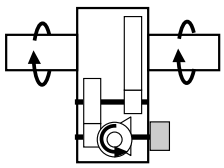
X4T...	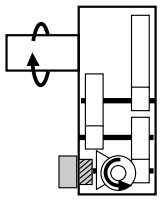	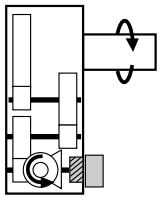	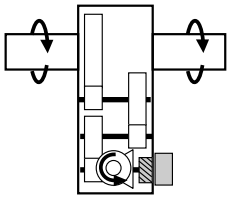	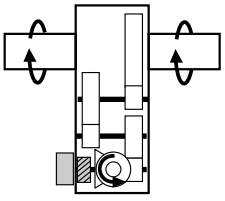

Direction of rotation reversal

Shaft position	53 [1]	54 [1]	63 [1]	64 [1]
End gear pos.	3	4	3	4
X3T...	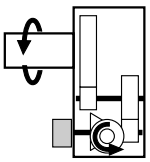	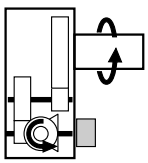	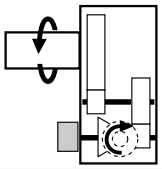	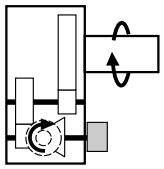
X4T...	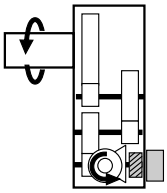	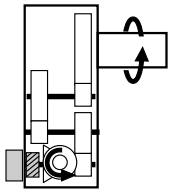	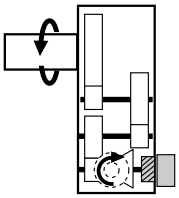	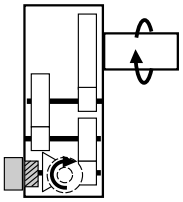

= Position of the backstop

= Alternative backstop position (depending on size and gear ratio)

* = Consult SEW-EURODRIVE when using a backstop

1) Note the restrictions regarding external forces on the LSS

3.9 Housing types

The gear unit comes equipped with the following housing type:

3.9.1 Horizontal housing /HH

The horizontal housing is designed for mounting position M1. This housing type is non-reversible.

Single-piece housing

The following figure shows an example of a single-piece housing for gear unit sizes 100 to 210:

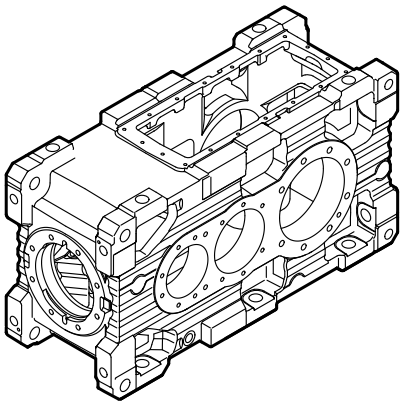

9007208285647499

Two-piece housing

The following figure shows an example of a two-piece housing for gear unit sizes 220 to 320:

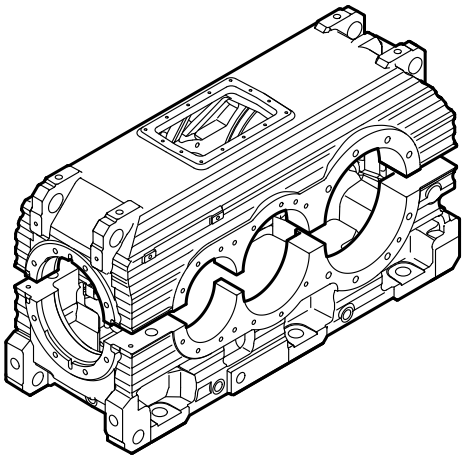

9453596299

3.9.2 Universal housing /HU

The universal housing can be installed in any mounting position (M1 to M6). The housings can be reversible if required.

Single-piece housing

The following figure shows an example of a single-piece housing for gear unit sizes 100 to 210:

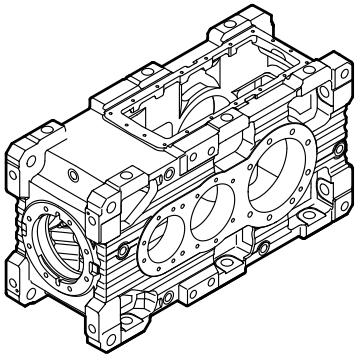

8584413835

Two-piece housing

The following figure shows an example of a two-piece housing for gear unit sizes 220 to 320:

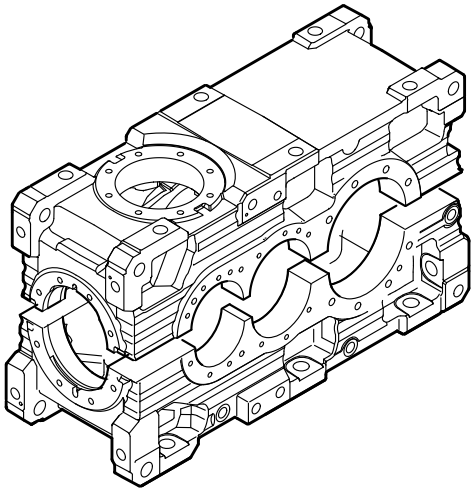

8584415499

3.9.3 Thermal housing /HT

The thermal housing is designed for mounting position M1. This housing type is non-reversible. Various measures make this gear unit suitable for increased thermal requirements.

The following figure shows an example of a thermal housing for gear unit size 220:

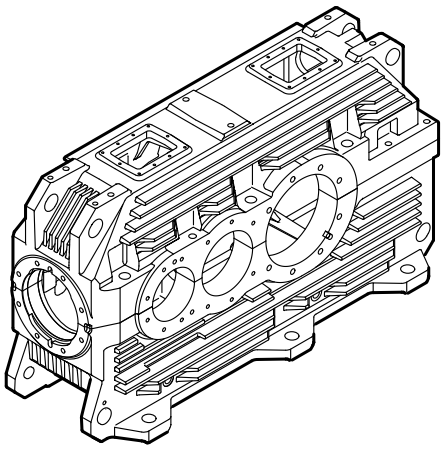

9647807243

3.10 Combination overview of housing types and options

3.10.1 Horizontal housing /HH

INFORMATION

There might be restrictions when options are installed later by the operator. The reason is that not all options can be mounted to the gear unit housing. Observe the information in the SEW catalog "Horizontal Gear Units, X.. Series" and contact SEW-EURODRIVE.

The following table shows the options that can be combined with the horizontal housing.

Abbreviations	Options	Gear unit sizes													
		X100-X210			X220-X250					X260-X320				
		3F	3K		2F	3F	3K	4F	4K	2F	3F	3K	4F	4K
/BF	Base frame	HH	HH		HH	HH	HH	HH	HH	–	HH	HH	HH	HH
/BS	Backstop	HH	HH		HH	HH	HH	HH	HH	–	HH	HH	HH	HH
/BSL	Torque-limiting backstop	–	HH		–	–	HH	–	–	–	–	HH	–	–
/CCV	Water cooling cover	HH	HH		–	---	–	–	–	–	–	–	–	–
/CCT	Water cooling cartridge	–	–		HH	HH	HH	HH	HH	HH	HH	HH	HH	HH
/FC	Rigid flange coupling	HH	HH		HH	HH	HH	HH	HH		HH	HH	HH	HH
/FAN	Fan	HH	HH		HH	HH	HH	–	–	HH	HH	HH	–	–
/FAN-ADV	Fan Advanced	–	HH		–	–	HH	–	–	–	–	HH	–	–
/HSST	Continuous input shaft	HH	HH		HH	HH	HH	HH	HH	HH	HH	HH	HH	HH
/LSST	Continuous output shaft	HH	HH		HH	HH	HH	HH	HH	HH	HH	HH	HH	HH
/MA	Motor adapter	HH	HH		–	–	–	–	–	–	–	–	–	–
/SB	Swing base	HH	HH		HH	HH	HH	HH	HH	HH	HH	HH	HH	HH
/SEP	Shaft end pump	–	–		HH	HH	HH	HH	HH	HH	HH	HH	HH	HH
/T	Torque arm	HH	HH		HH	HH	HH	HH	HH	HH	HH	HH	HH	HH
/OAC	Oil-air cooler	–	–		HH	HH	HH	HH	HH	HH	HH	HH	HH	HH
/OWC	Oil-water cooler	–	–		HH	HH	HH	HH	HH	HH	HH	HH	HH	HH
/OAP	Oil-air cooler	–	–		HH	HH	HH	HH	HH	HH	HH	HH	HH	HH
/OWP	Oil-water cooler	–	–		HH	HH	HH	HH	HH	HH	HH	HH	HH	HH
/ONP	Motor pump	–	–		HH	HH	HH	HH	HH	HH	HH	HH	HH	HH
/OD	Oil dipstick	HH	HH		HH	HH	HH	HH	HH	HH	HH	HH	HH	HH
/ODV	Oil drain valve	HH	HH		HH	HH	HH	HH	HH	HH	HH	HH	HH	HH
/OH	Oil heater	–	–		HH	HH	HH	HH	HH	HH	HH	HH	HH	HH
/OLG	Oil level glass	HH	HH		HH	HH	HH	HH	HH	HH	HH	HH	HH	HH
/PT100	Temperature sensor	–	–		HH	HH	HH	HH	HH	HH	HH	HH	HH	HH
/NTB	Temperature switch	–	–		HH	HH	HH	HH	HH	HH	HH	HH	HH	HH
/TSK	Temperature switch	–	–		HH	HH	HH	HH	HH	HH	HH	HH	HH	HH
/DUO10A	Diagnostic unit	–	–		HH	HH	HH	HH	HH	HH	HH	HH	HH	HH

HH = Horizontal housing

3.10.2 Universal housing /HU

INFORMATION

There might be restrictions when options are installed later by the operator. The reason is that not all options can be mounted to the gear unit housing. Observe the information in the SEW catalog "Horizontal Gear Units, X.. Series" and contact SEW-EURODRIVE.

The following table shows the options that can be combined with the universal housing.

Abbreviations	Options	X100-X210						X220-X250						X260-X320				
		2F	2K	3F	3K	4F	4K	2F	2K	3F	3K	4F	4K	2F	3F	3K	4F	4K
/BF	Base frame	HU	HU	HU	HU	HU	HU	HU	HU	HU	HU	HU	HU	HU	HU	HU	HU	HU
/BS	Backstop	HU	HU	HU	HU	HU	HU	HU	HU	HU	HU	HU	HU	HU	HU	HU	HU	HU
/BSL	Torque-limiting backstop	–	–	–	HU	–	–	–	–	–	HU	–	–	–	–	HU	–	–
/CCV	Water-cooling cover	HU	HU	HU	HU	HU	HU	–	–	–	–	–	–	–	–	–	–	–
/CCT	Water-cooling cartridge	HU	HU	HU	HU	HU	HU	HU	HU	HU	HU	HU	HU	HU	HU	HU	HU	HU
/F	Mounting flange	HU	HU	HU	HU	HU	HU	–	–	–	–	–	–	–	–	–	–	–
/FC	Rigid flange coupling	HU	HU	HU	HU	HU	HU	HU	HU	HU	HU	HU	HU	HU	HU	HU	HU	HU
/FAN	Fan	HU	HU	HU	HU	HU	HU	HU	HU	HU	HU	HU	HU	HU	HU	HU	HU	HU
/FAN-ADV	Fan Advanced	–	–	–	HU	–	–	–	–	–	HU	–	–	–	–	HU	–	–
/HSST	Continuous input shaft	HU	HU	HU	HU	HU	HU	HU	HU	HU	HU	HU	HU	HU	HU	HU	HU	HU
/LSST	Continuous output shaft	HU	HU	HU	HU	HU	HU	HU	HU	HU	HU	HU	HU	HU	HU	HU	HU	HU
/MA	Motor adapter	HU	HU	HU	HU	HU	HU	HU	HU	HU	HU	HU	HU	HU	HU	HU	HU	HU
/SB	Swing base	HU	HU	HU	HU	HU	HU	HU	HU	HU	HU	HU	HU	HU	HU	HU	HU	HU
/SEP	Shaft end pump	HU	HU	HU	HU	HU	HU	HU	HU	HU	HU	HU	HU	HU	HU	HU	HU	HU
/T	Torque arm	HU	HU	HU	HU	HU	HU	HU	HU	HU	HU	HU	HU	HU	HU	HU	HU	HU
/OAC	Oil-air cooler	HU	HU	HU	HU	HU	HU	HU	HU	HU	HU	HU	HU	HU	HU	HU	HU	HU
/OWC	Oil-water cooler	HU	HU	HU	HU	HU	HU	HU	HU	HU	HU	HU	HU	HU	HU	HU	HU	HU
/OAP	Oil-air-cooler	HU	HU	HU	HU	HU	HU	HU	HU	HU	HU	HU	HU	HU	HU	HU	HU	HU
/OWP	Oil-water cooler	HU	HU	HU	HU	HU	HU	HU	HU	HU	HU	HU	HU	HU	HU	HU	HU	HU
/ONP	Motor pump	HU	HU	HU	HU	HU	HU	HU	HU	HU	HU	HU	HU	HU	HU	HU	HU	HU
/OD	Oil dipstick	HU	HU	HU	HU	HU	HU	HU	HU	HU	HU	HU	HU	HU	HU	HU	HU	HU
/ODV	Oil drain valve	HU	HU	HU	HU	HU	HU	HU	HU	HU	HU	HU	HU	HU	HU	HU	HU	HU
/OH	Oil heater	HU	HU	HU	HU	HU	HU	HU	HU	HU	HU	HU	HU	HU	HU	HU	HU	HU
/OLG	Oil level glass	HU	HU	HU	HU	HU	HU	HU	HU	HU	HU	HU	HU	HU	HU	HU	HU	HU
/VBD	V-belt drive	–	–	HU	HU	HU	–	–	–	HU	HU	HU	–	–	–	–	–	–
/PT100	Temperature sensor	HU	HU	HH	HU	HU	HU	HU	HU	HU	HU	HU	HU	HU	HU	HU	HU	HU
/NTB	Temperature switch	HU	HU	HU	HU	HU	HU	HU	HU	HU	HU	HU	HU	HU	HU	HU	HU	HU
/TSK	Temperature switch	HU	HU	HU	HU	HU	HU	HU	HU	HU	HU	HU	HU	HU	HU	HU	HU	HU
/DUO10A	Diagnostic unit	HU	HU	HU	HU	HU	HU	HU	HU	HU	HU	HU	HU	HU	HU	HU	HU	HU

Options are not available in all gear unit sizes

HU / Universal housing

3.10.3 Thermal housing /HT

INFORMATION

There might be restrictions when options are installed later by the operator. The reason is that not all options can be mounted to the gear unit housing. Consult SEW-EURODRIVE.

The following table shows the options that can be combined with the thermal housing.

Abbreviations	Options	X3K180-320
/BF	Base frame	HT
/BS	Backstop	HT
/BSL	Torque-limiting backstop	HT
/FC	Rigid flange coupling	HT
/FAN	Fan	HT
/HSST	Continuous input shaft	HT
/LSST	Continuous output shaft	HT
/SB	Swing base	HT
/SEP	Shaft end pump	HT
/T	Torque arm	HT
/OD	Oil dipstick	HT
/ODV	Oil drain valve	HT
/OH	Oil heater	HT
/OLG	Oil level glass	HT
/PT100	Temperature sensor	HT
/NTB	Temperature switch	HT
/DUO10A	Diagnostic unit	HT
/AP	Breather	HT

HT / thermal housing

3.11 Gearing and shafts

The hardened and ground gearing is made from high-quality hardened steels. The output shafts are made of tough quenched and tempered steel.

3.12 Input and output shafts

There are two types of shafts:

- High-speed shaft (**HSS**), usually an input shaft
- Low-speed shaft (**LSS**), usually an output shaft

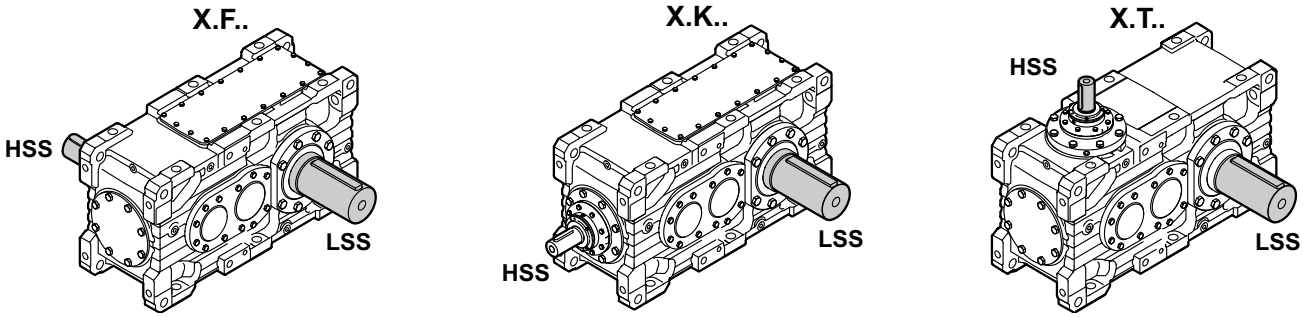

3.12.1 Input shaft

The input shaft is provided with a closed keyway according to DIN 6885/T1 and a center bore (according to DIN 332). The matching key according to DIN 6885/T1 - form A is included in the delivery.

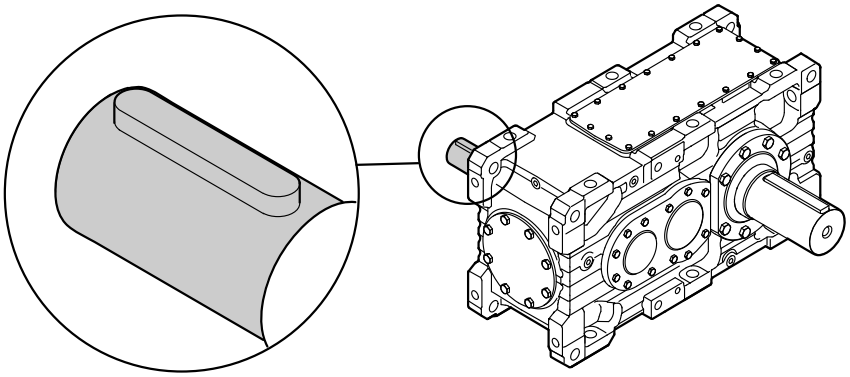

18014398833520651

3.12.2 Output shaft as a solid shaft with key /..S

The output shaft is provided with a closed keyway according to DIN 6885/T1 and a center bore (according to DIN 332). The delivery includes a key according to DIN 6885/T1 - form B. The shaft has an insertion area with a reduced diameter to simplify the mounting of output elements, such as a coupling hub.

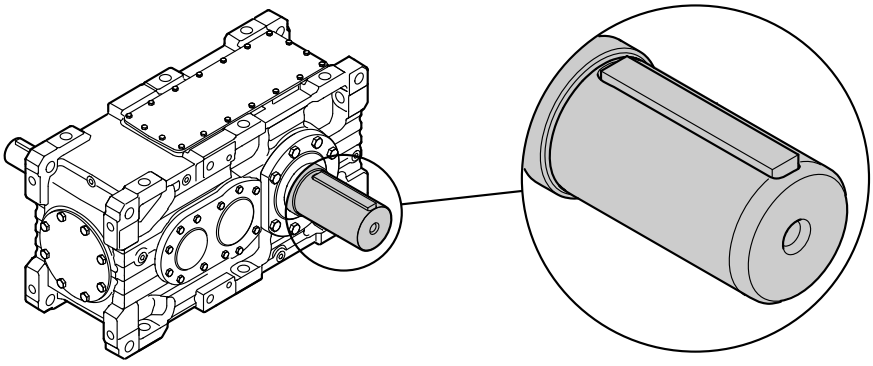

9007199578978827

3.12.3 Smooth output shaft /..R

The gear units are available with a smooth output shaft to install non-positive output elements, such as flange couplings with a cylindrical interference fit. The shaft's face has a center bore according to DIN 332. The insertion area with reduced diameter facilitates the mounting of output elements.

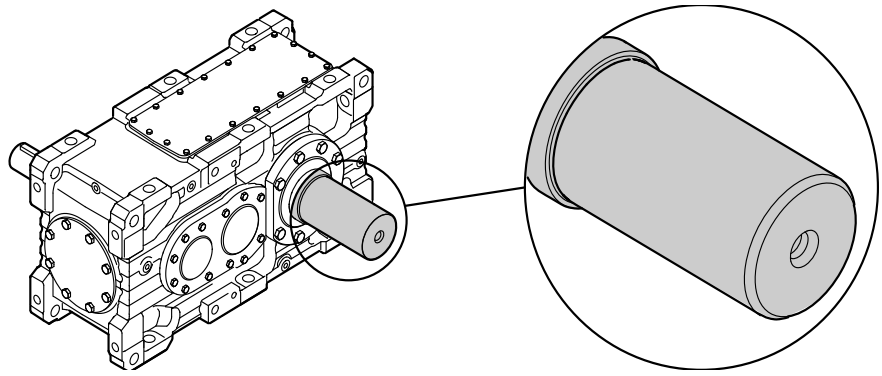

9007200756231819

3.12.4 Output shaft as a splined solid shaft /..L

The output shaft is splined according to DIN 5480. There is a centering in front of and behind the splined shaft to improve the guide of the output element. 2 threads are available on the front end of the shaft for the mounting of an end plate.

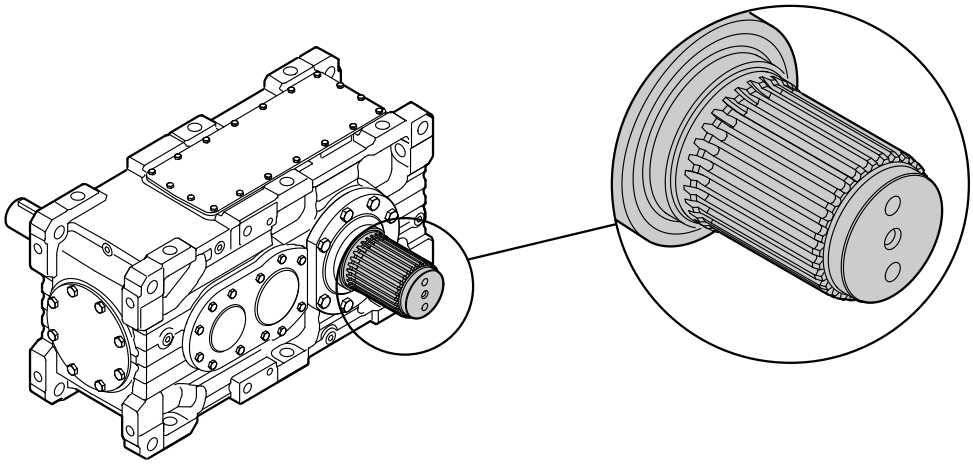

9007199999008011

3.12.5 Output shaft as a hollow shaft with keyway /..A

The hollow shaft is equipped with a keyway according to DIN 6885/T1.

Included in the scope of delivery:

End plate with retaining screws [1], or 2 retaining rings and protection guard [2].

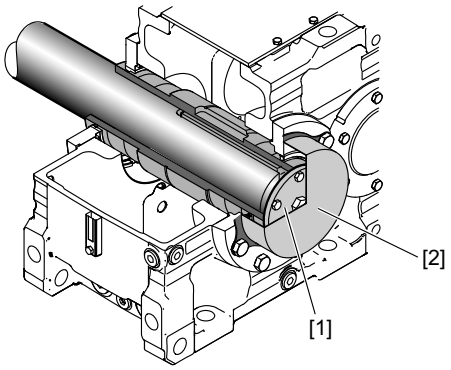

324297995

The protection cover is dust-proof. The standard sealing system is therefore normally used on the protection guard side.

3.12.6 Output shaft as a hollow shaft with shrink disk /..H

The shrink disk is positioned on the opposite side of the machine shaft.

Included in the scope of delivery:

End plate with retaining screws [1], or 2 retaining rings, shrink disk [2], protection guard [3].

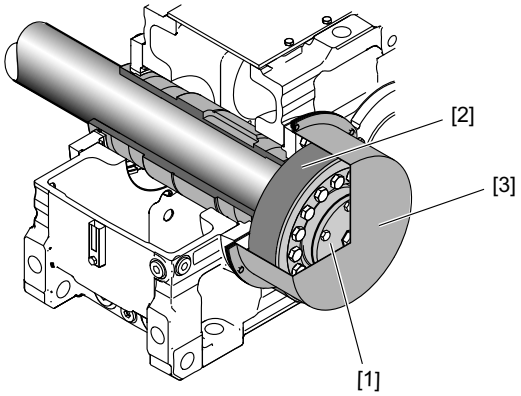

324304523

The protection cover is dust-proof. The standard sealing system is therefore normally used on the protection guard side.

3.12.7 Output shaft as a splined hollow shaft /..V

The output shaft is a splined shaft according to DIN 5480.

Included in the delivery:

End plate with retaining screws [1], or 2 retaining rings and protection guard [2].

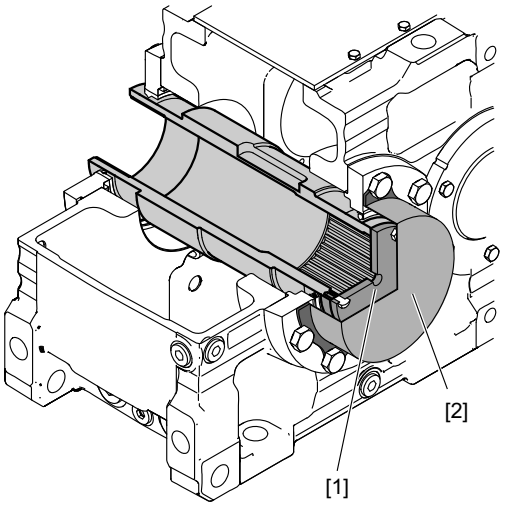

744267019

3.12.8 Gear unit mounting for hollow shaft gear units



NOTICE

Constraining forces can occur on the output shaft bearing due to the rigid connection between the machine shaft and hollow shaft of the gear unit. This may result in damages to the output shaft bearing and increased fretting corrosion in the connection between the machine and the hollow shaft of the gear unit.

Possible damage to property.

- The gear unit is usually foot or flange-mounted and used as bearing point when the machine shaft has no individual bearing or merely provides one bearing point. You have to provide for an accurate coaxial alignment with the bearing point.
- If the machine shaft has at least two bearing points, the gear unit should be connected merely to the machine shaft and supported with a torque arm. Avoid foot or flange-mounted gear units to avoid that the bearing is over-dimensioned.

3.13 Sealing systems

3.13.1 Input shaft

Standard	Dust-proof	Dust-proof Regreasable	Radial labyrinth seal (Taconite) Regreasable
Single oil seal with dust protection lip	Single lip seal with dust protection cover	Double lip seal with dust protection cover	Single lip seal with radial labyrinth seal
• Normal environment	• **Medium** dust load with abrasive particles	• **High** dust load with abrasive particles	• **Very high** dust load with abrasive particles
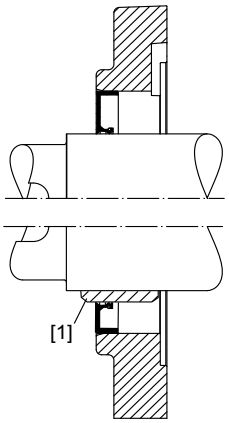 9007199562899211	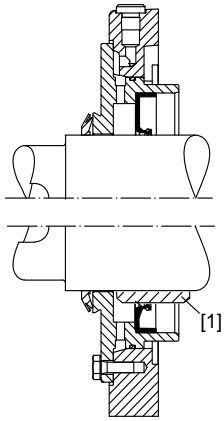 9007199562903563	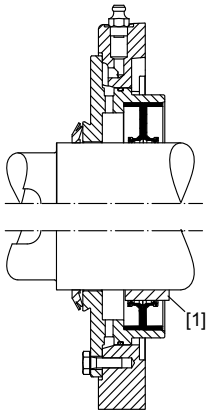 9007199562907659	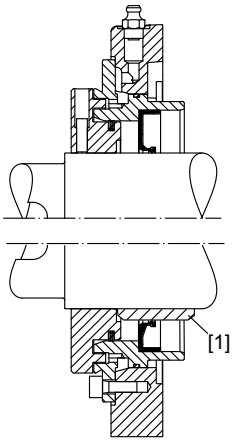 9007199562924555

[1] Optional with oil seal sleeve

3.13.2 Output shaft

Standard	Dust-proof	Dust-proof Regreasable	Radial labyrinth seal (Taconite) Regreasable
Single oil seal with dust protection lip	Single lip seal with dust protection cover	Double lip seal with dust protection cover	Single oil seal with radial labyrinth seal
• Normal environment	• **Medium** dust load with abrasive particles	• **High** dust load with abrasive particles	• **Very high** dust load with abrasive particles
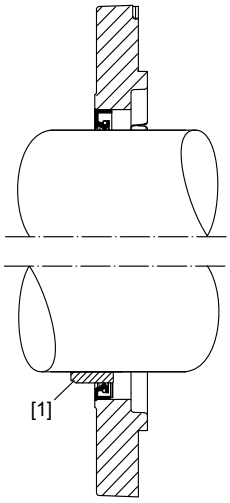 9007199562929931	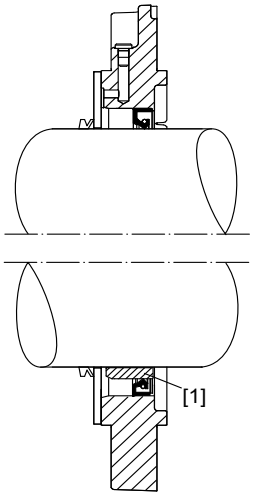 9007199562972427	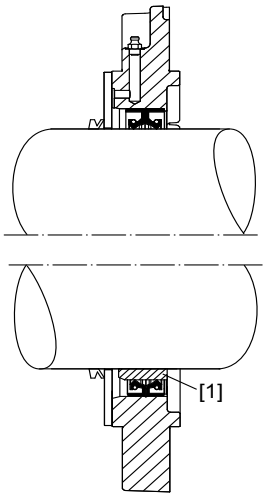 9007199562976523	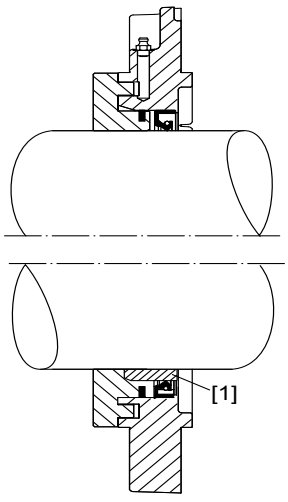 9007199562980619

[1] Optional with oil seal sleeve

INFORMATION

Make sure that the gear unit shaft is rotating during the regreasing process.

3.13.3 Position of lubrication points

Grease nipple on gear unit cover

Regreasable sealing systems are usually equipped with taper greasing nipples according to DIN 71412 A R1/8. Regreasing must be carried out at regular intervals. The greasing points are located near the input and output shafts. Observe chapter "Maintenance intervals" (page 213).

Example

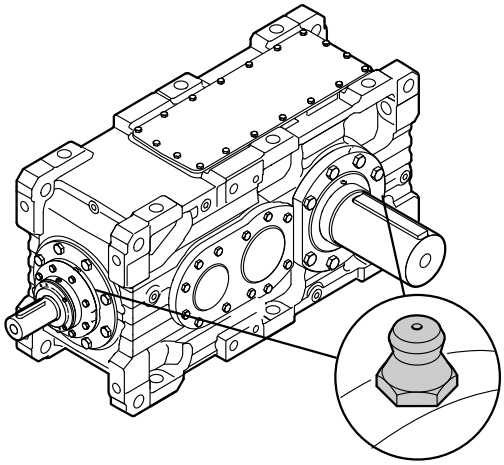

Grease nipple on the top side of the gear unit

When installed in a restricted space, the lubrication points can be relocated to the top side of the gear unit. Flat greasing nipples according to DIN 3404 A G1/8 are used. Regreasing must be carried out at regular intervals. Observe chapter "Maintenance intervals" (page 213).

Note the following points:

- This option is normally used on drives with fans, motor adapters, or V-belt drives.
- The option applies to both drive and output shaft(s).

Example

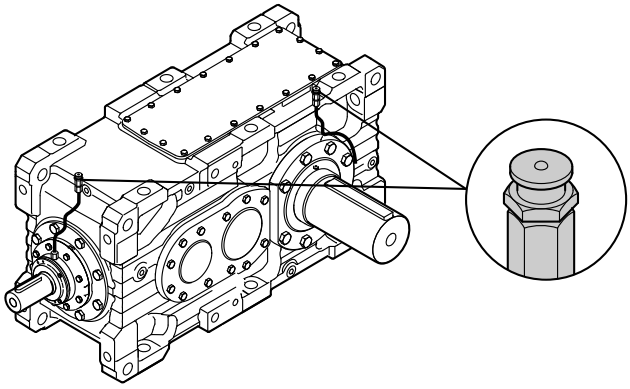

3.13.4 Drywell sealing system

Vertical gear units with output shaft pointing downwards can be equipped with a Drywell sealing system in addition to the usual sealing. The lower bearing of the output shaft is separated from the oil chamber via an integrated tube [1]. The bearing is grease-lubricated and has to be relubricated at regular intervals (DIN 3404 A G1/8 flat grease nipple). The oil level is lower than the upper end of the tube so no oil [2] can leak out there. All gear units with pressure lubrication (shaft end pump or motor pump) are equipped with Drywell sealing system to ensure sufficient lubrication of the upper bearing and the gearing.

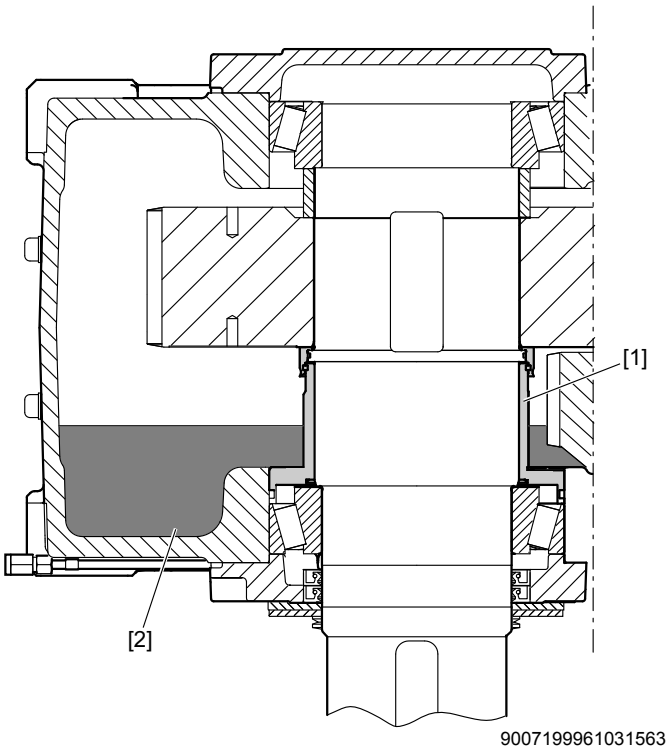

3.14 Coating and surface protection systems

The following table gives an overview of coating and surface protection systems.

SEW design	OS 1 Low environmental impact	OS 2 Medium environmental impact	OS 3 High environmental impact
Used as surface protection under typical ambient conditions **Corrosion categories DIN EN ISO 12944-2**	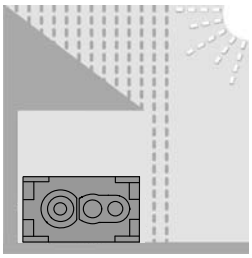 Suited for environments prone to condensation and atmospheres with low humidity or contamination, such as outdoor applications under roof or with protection, unheated buildings where condensation can build up. According to corrosivity category C2 (low)	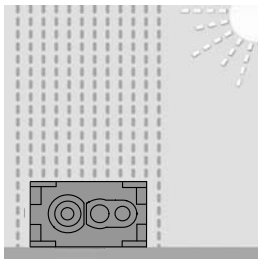 Suited for environments with high humidity or moderate atmospheric contamination, such as applications outdoors subject to direct weathering. According to corrosivity category C3 (moderate)	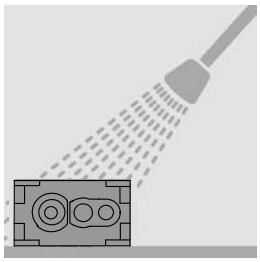 Suitable for environments with high humidity and occasionally severe atmospheric and chemical contamination. Occasionally acidic or caustic wet cleaning. Also for applications in coastal areas with moderate salt load. According to corrosivity category C4 (high)
Sample applications	• Systems in saw mills • Agitators and mixers	• Applications in gravel plants • Cable cars	• Port cranes • Sewage treatment plants • Mining applications
Condensation test ISO 6270	120 h	120 h	240 h
Salt spray test ISO 7253	–	240 h	480 h
Top coat color[1)]	RAL 7031	RAL 7031	RAL 7031
Color according to RAL	Yes	Yes	Yes
Uncoated parts: shaft end/flanges	Water and hand perspiration repelling rust preventive applied at the factory for external preservation.		

1) Standard color

INFORMATION

Sheet metal parts (e.g. protection covers, fan guard) are painted in RAL 1003.

3.15 Lubrication

3.15.1 Lubrication types

Splash lubrication

The oil level is low; gearing and bearing parts that are not immersed in the oil bath are lubricated by splashing oil. Standard lubrication type for horizontal mounting positions (M1 or M3).

Oil bath lubrication

The gear unit is (almost) completely filled with oil; all gearing and bearing positions are submerged in the oil bath either completely or partly.

- Standard lubrication type with oil expansion tank for:
  - Swiveling mounting positions with horizontal gear units beyond a certain inclination angle (depending on type of gear unit, version and size)
  - Vertical gear units (mounting position M5)
  - Upright mounting position (M4) with X.K.. gear units
- Standard lubrication type without oil expansion tank for:
  - Upright mounting position (M4) with X.F.. / X.T.. gear units

Pressure lubrication

The gear unit is equipped with a pump (shaft end pump or motor pump). The oil level is low and might even be reduced when compared to splash lubrication. The gearings and bearing parts that are not immersed in the oil bath are lubricated by oil through lubrication lines.

Pressure lubrication is used when

- Splash lubrication is not possible (see the relevant mounting positions and variants under "Bath lubrication"),
- Oil bath lubrication is not desired or is not advantageous for thermal reasons,
- Drywell sealing system is required (only with a vertical output shaft with LSS facing down),
- High input speeds are present and the speed limit for the other types of lubrication is exceeded (dependant on the gear unit size, variant, and number of stages).

3.16 Accessories

The following chapter describes the accessories for the several types of lubrication.

INFORMATION

The position of accessories may vary depending on gear unit type and size.

3.16.1 General accessories

The following figure shows the general accessories.

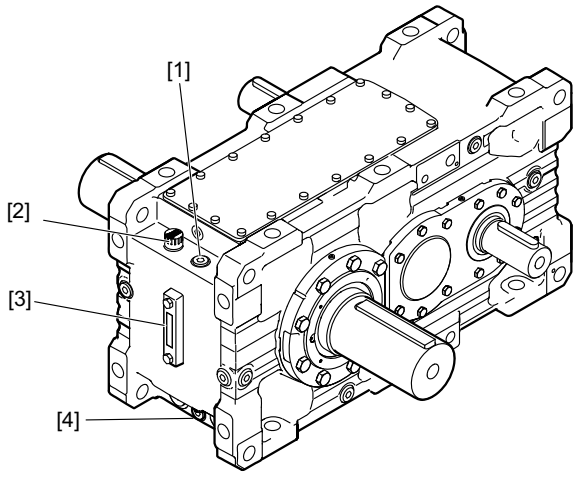

2671413899

[1] Oil dipstick (optional)
[2] Gear unit venting
[3] Oil level glass
[4] Oil drain

Visual oil level check

The following types are available as standard for gear units in **M1** mounting position with splash lubrication:

- Oil dipstick for gear unit sizes X.100 to X.170
- Oil level glass for gear unit sizes X.180 to X.320

For other mounting positions and types of lubrication, the gear unit is equipped with an oil dipstick as standard.

Breather

The purpose of the gear unit breather is to prevent that non-permitted pressure occurs from heating during operation. The gear units are normally equipped with a high-quality breather filter with a filter mesh of 2 µm.

Oil drain

The gear unit is equipped with an oil drain plug as standard. An oil drain valve may be provided as option. This valve allows for a drain pipe to be easily attached when changing the gear unit oil.

4 Design of options and accessories

4.1 Oil expansion tank /ET

The purpose of the oil expansion tank is to compensate for oil volume variations in the system caused by temperature fluctuations. When the gear unit temperature increases, the expansion tank absorbs some of the increasing oil volume and feeds it back to the gear unit as the temperature goes down. As a result, the gear unit is always completely filled with oil.

Based on the oil level specified by SEW-EURODRIVE, the oil expansion tank is designed to compensate the oil volume change within the permitted operating temperature range. A temperature decrease below the permitted range causes the expansion tank to be completely emptied and air being sucked into the gear unit. This might result in insufficient lubrication and a malfunction of the gear unit. An increase above the permitted range causes an overfilling of the expansion tank and oil might leak from the gear unit. During operation, any oil level below or above the level specified by SEW-EURODRIVE is permitted as long as there is oil in the expansion tank and the expansion tank does not overflow.

The following figure shows the accessories for mounting positions M1, M4 and M5.

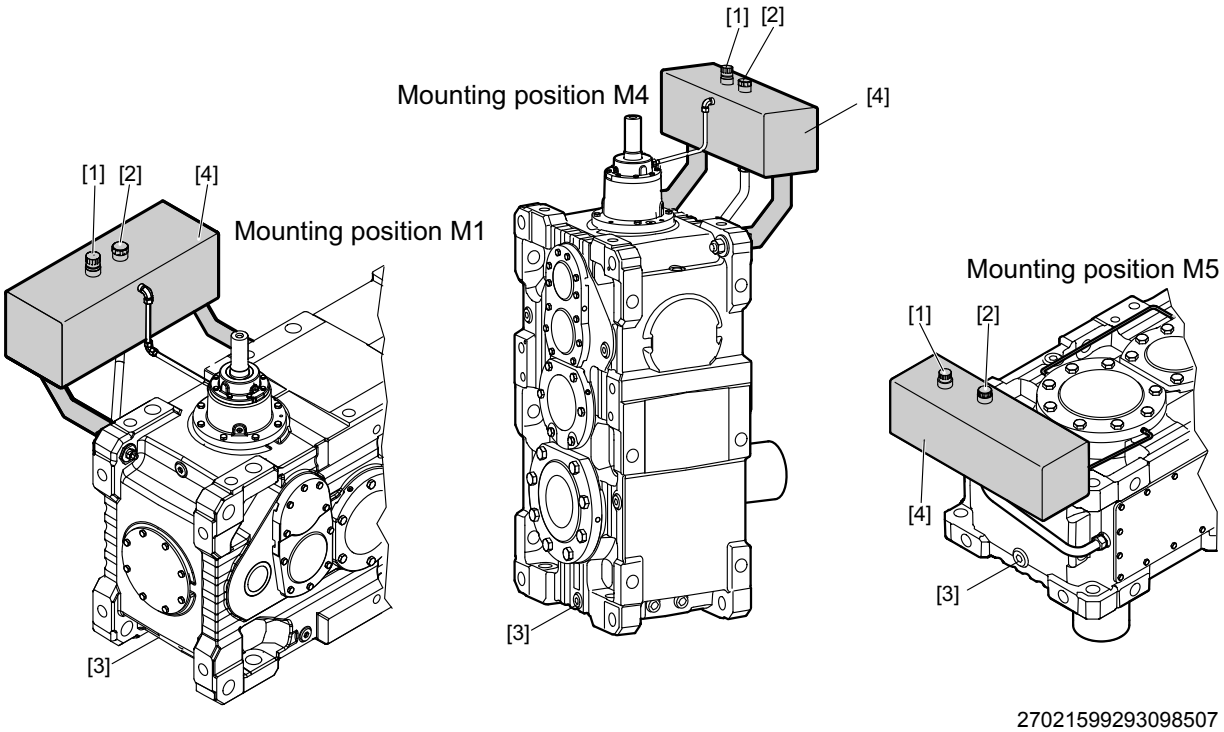

27021599293098507

[1] Gear unit venting
[2] Oil dipstick
[3] Oil drain
[4] Oil expansion tank

4.2 Shaft end pump /SEP

The figure shows the shaft end pump in M5 mounting position as an example.

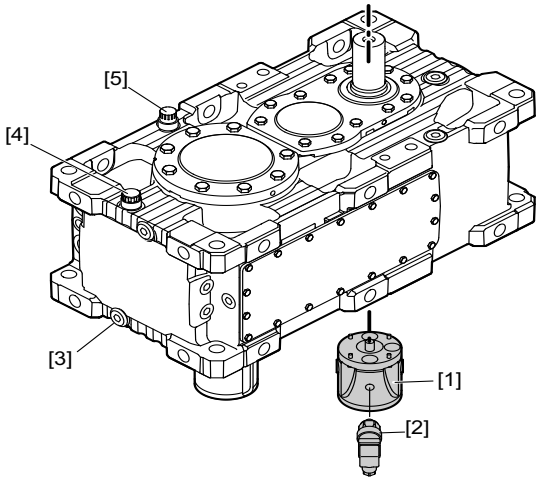

9007199962408331

[1] Shaft end pump
[2] Pressure switch
[3] Oil drain
[4] Gear unit venting
[5] Oil dipstick

A direction-independent shaft end pump [1] supplies all bearing points and gearing outside the oil sump with oil via a tube system.

The shaft end pump [1] is mounted externally to the gear unit and is driven by the input shaft or intermediate shaft of the gear unit. A high reliability of the pump function is ensured in this way.

The shaft end pump [1] is available in 5 different pump sizes. The adequate flow rate for the specific application depends on the following factors:

- Oil quantity required to supply the lubrication points
- Pump position (connected to input shaft or intermediate shaft)
- Gear unit reduction ratio
- Dimensioned for a speed of the gear unit

INFORMATION

- Proper functioning of the shaft end pump is monitored via the connected pressure switch. Refer to chapter "Pressure switches" (page 87) for information.
- Consult SEW-EURODRIVE for information on the pump size selection.
- A minimum input speed is required for the shaft end pump to operate properly. If you use variable input speeds (e.g. inverter-controlled drives) or if you intend to change the input speed of a gear unit equipped with a shaft end pump, it is essential that you contact SEW-EURODRIVE.

4.2.1 Position of the shaft end pump

X.F.. For helical gear units, the shaft end pump is located opposite the input shaft.

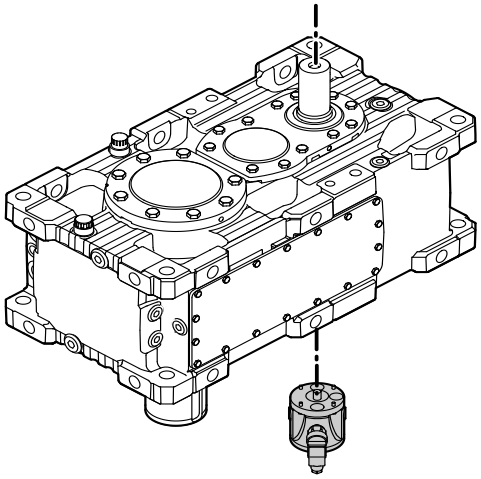

9007199962489227

X2K.. / X4K.. / X4T.. For X2K/X4K/X4T bevel-helical gear units, the shaft end pump is located opposite the output shaft.

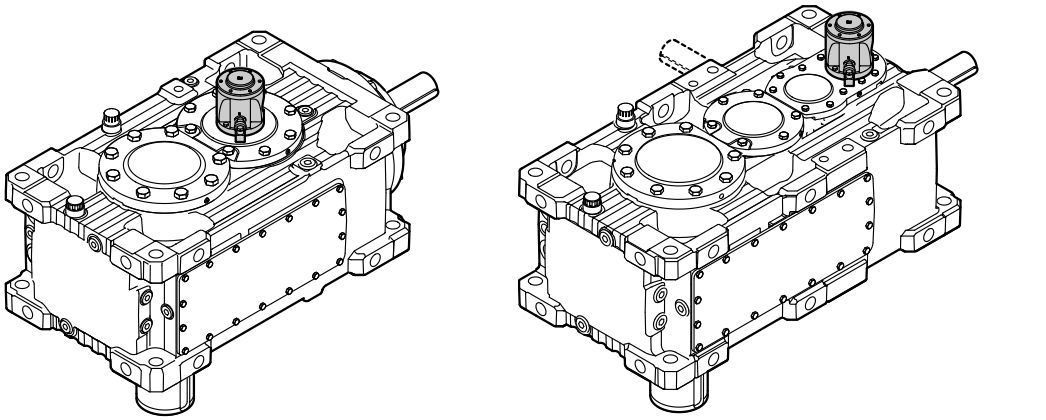

5461376523

X3K.. / X3T.. For X3K/X3T gear units, the shaft end pump is located on the output shaft side.

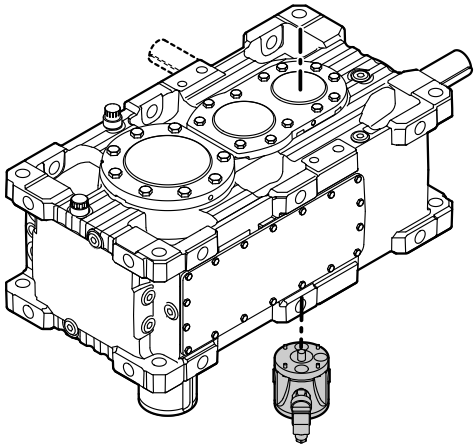

9007200644569611

4.3 Motor pump /ONP

INFORMATION

For descriptions on the unit structure, refer to the manufacturer's documentation and the addendum to the operating instructions "Motor Pump /ONP".

4.4 Torque arm /T

A torque arm is available as option for shaft-mounted gear units to support the reaction torque. The torque arm can bear tensile stress as well as thrust loads.

The length of the torque arm can be adjusted within a certain range.

The torque arm consists of a yoke with bolt [1], a threaded bolt [2], a maintenance-free joint head [3], and a yoke plate with bolt [4]. The design using the joint head allows for compensating assembly tolerances and operational displacements. Constraining forces on the output shaft are avoided in this way.

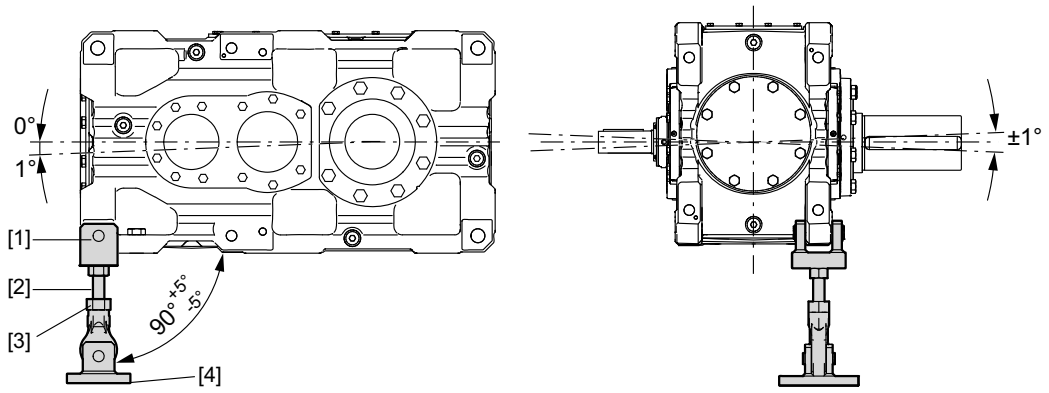

359126795

[1] Yoke with bolt
[2] Threaded bolt with nut
[3] Joint head
[4] Yoke plate with bolt

INFORMATION

The fan X.K.. cannot be used together with a torque arm because the fan guard is mounted to the attachment point of the torque arm.

4.5 Flange couplings with cylindrical interference fit /FC

NOTICE

Improper installation and mounting may result in damage to the gear unit.

Possible damage to the gear unit.

- Gear units with rigid flange couplings cannot be additionally secured on the floor with a rigid connection. This is why foot mounting of the gear unit or using a base frame is not permitted.

Flange couplings [1] are rigid couplings for connecting 2 shafts [2].

They are suitable for operation in both directions of rotation, but cannot compensate any shaft misalignments.

Torque between the shaft and the coupling is transmitted via a cylindrical interference fit. Both coupling halves are mounted together at their flanges. The couplings are equipped with several disassembly bores [3] for removing the interference fit hydraulically.

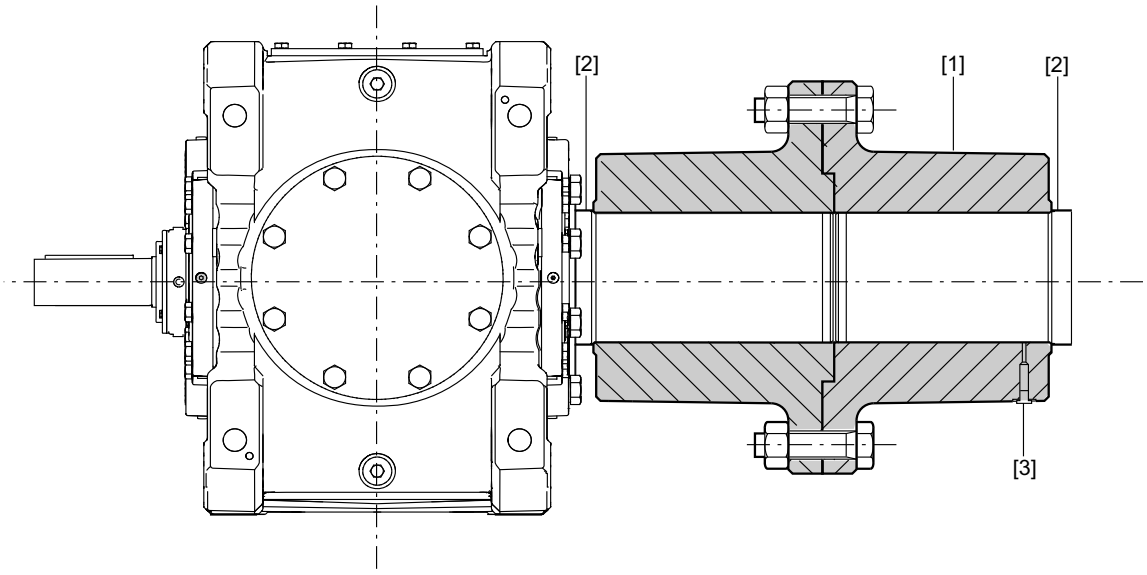

9007200206609291

4.6 Mounting flange /F

INFORMATION

The mounting flange can be combined with all output shaft types but cannot be used with the standard sealing system.

Observe the limitations for hollow-shaft gear units in section "Gear unit mounting for hollow shaft gear units" (page 52).

As an alternative to foot mounting, a mounting flange is available for gear units up to size 210.

The standard is a B14 flange and in addition a B5 flange for gear unit sizes X130 - 190, which is fitted with external centering and retaining threads for connection to the customer machine.

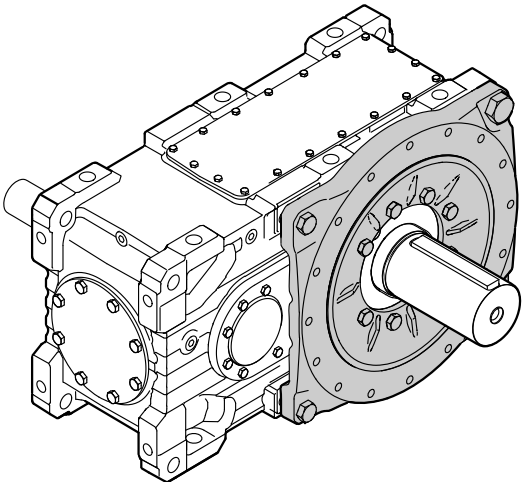

674164491

4.7 Backstop /BS

The purpose of a backstop is to prevent undesirable reverse rotation. During operation, the backstop permits rotation in only one specified direction of rotation.

The backstop functions by using centrifugal lift-off sprags. Once the lift-off speed is reached, the sprags completely lift off from the contact surface of the outer ring. The backstop is lubricated with gear oil.

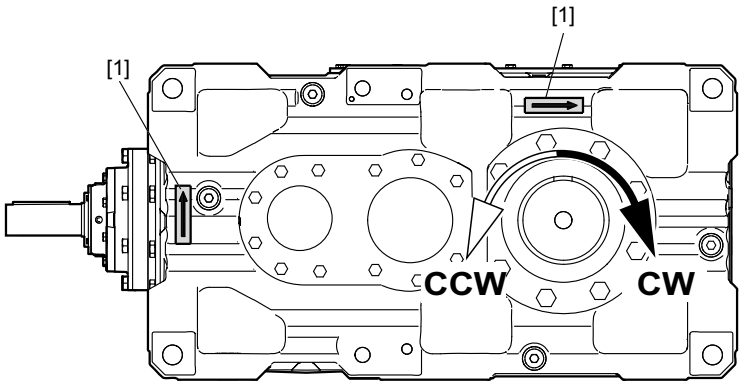

199930635

The direction of rotation is determined with a view to the output shaft (LSS).

- CW = Clockwise
- CCW = Counterclockwise

The permitted direction of rotation [1] is indicated on the housing.

INFORMATION

If the drive has a through-going output shaft, the direction of rotation of the backstop should be given as viewed towards shaft position 3.

Contact SEW-EURODRIVE for differing requirements.

The backstop might wear off when operated below lift-off speed.

In the following cases **always** contact SEW-EURODRIVE for specifying the maintenance intervals:

- Input speed rates n_1 < 950 rpm
- or any of the following gear unit designs:

n_1 [rpm]	Size		
	X2K..	X3K.. / X3T..	X4K.. / X4T..
950...1150	X2K100...230 i_N ≥ 10	X100...130 all i_N X140...170 i_N ≥ 31.5 X180...320 i_N ≥ 50	X120...190 all i_N X200...320 i_N ≥ 200
1150...1400	-	X100...110 i_N ≥ 25 X120...130 i_N ≥ 40 X140...170 i_N ≥ 50 X180...320 i_N ≥ 63	X120...170 all i_N X180...320 i_N ≥ 200
> 1400	-	X100...130 i_N ≥ 35.5 X140...170 i_N ≥ 63	X120...130 all i_N X140...250 i_N ≥ 200

n_1 = Input speed (HSS) i_N = Nominal gear unit ratio

4.8 Motor adapter /MA

Motor adapters [1] are available for mounting:

- **IEC (B5) motors** of sizes 100 to 355
- **NEMA ("C" face) motors** of sizes 182 to 449

INFORMATION

- The gear unit must be mounted in such a way that liquids cannot enter the motor adapter (HSS end) and accumulate there.
  Otherwise, the oil seal can be damaged, and subsequent damage can create a possible ignition source.
- An elastic claw coupling is included in the delivery of the motor adapter.
- All motor adapters can be equipped with a fan for 2- and 3-stage gear units.

The following figure shows an example of the motor adapter [1] connected to the gear unit:

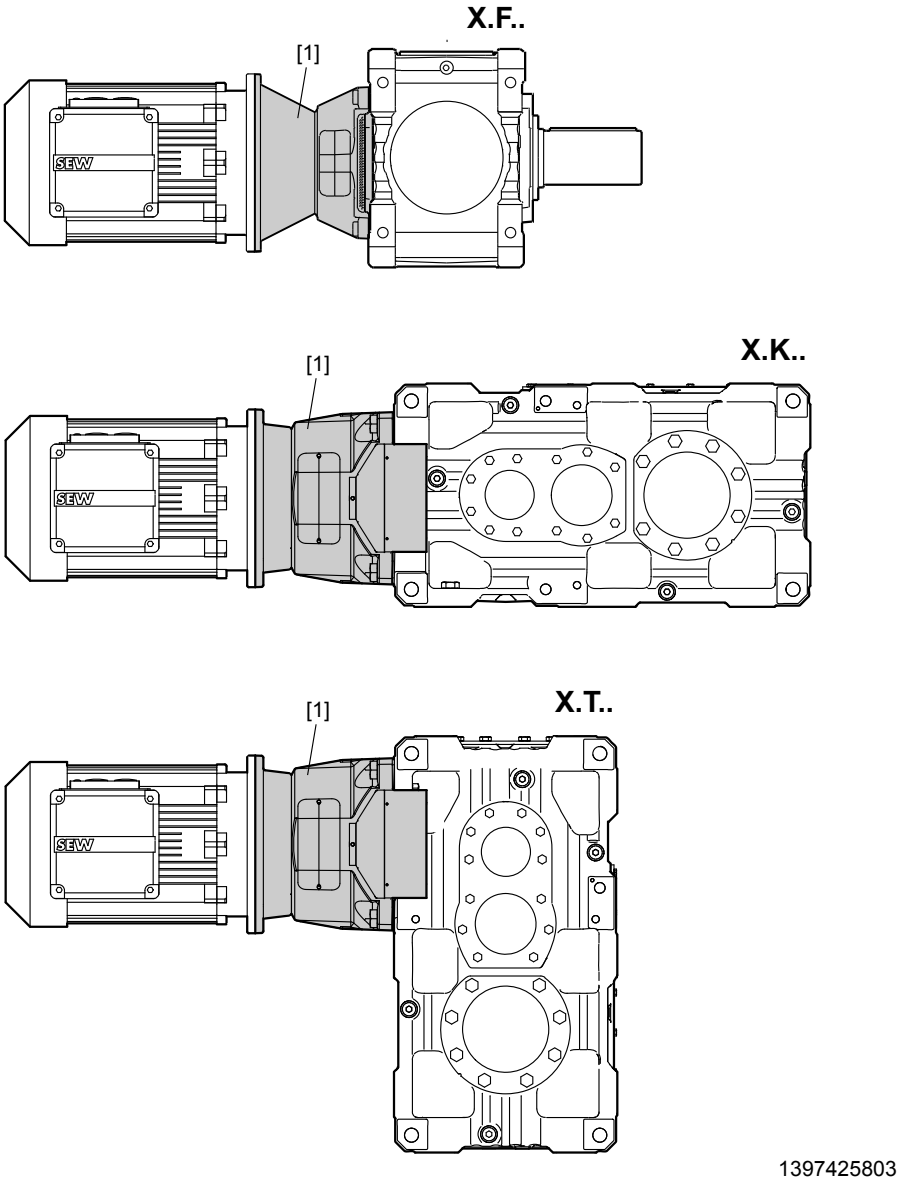

4.9 V-belt drives /VBD

⚠ WARNING

Observe the maximum circumferential velocity according to the respective manufacturer specifications.

Severe or fatal injuries.

- Belt pulley may be destroyed due to excessive speed rates.

INFORMATION

In standard design, V-belt drives cannot be combined with a mounting flange or a fan as these options would collide with the V-belt drive.

V-belt drives are used wherever you need to adjust the total ratio or wherever the installation space requires a certain motor configuration.

The standard scope of delivery comprises motor scoop, belt pulleys, V-belt, and protective cover for the V-belt. As an alternative, the drive can be supplied as completely mounted unit with motor.

The following figures show the basic design of a gear unit with V-belt drive.

X.F..

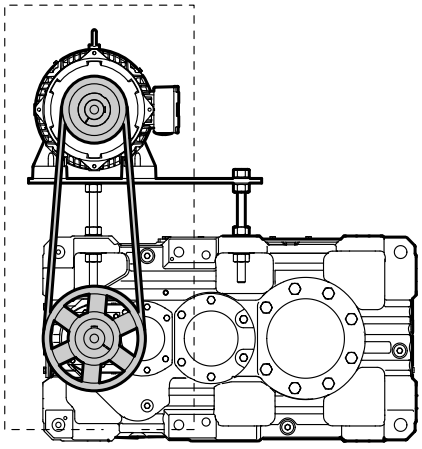

X.K..

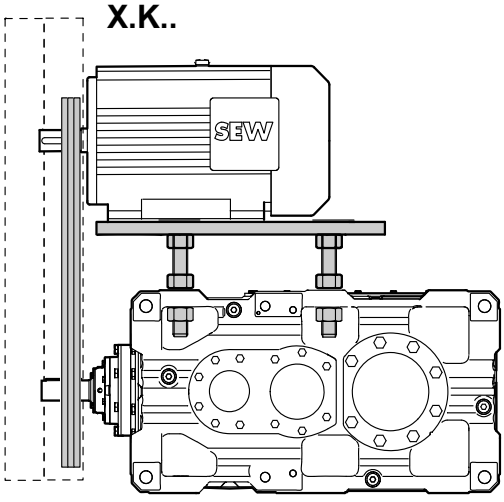

953104395

4.10 Drive packages on a steel frame

For gear units in a horizontal mounting position, complete pre-assembled drive packages on a steel frame (swing base or base frame) are available.

4.10.1 Swing base /SB

A swing base is a steel frame [1] that accommodates the gear unit, (hydro) coupling and motor (and brake, if required), including protection devices, such as a guard, etc. A swing base is normally used for:

- Hollow shaft gear units or
- solid shaft gear units with flange coupling on the output shaft.

The steel frame [1] is supported by a torque arm [2].

Example: Swing base with coupling

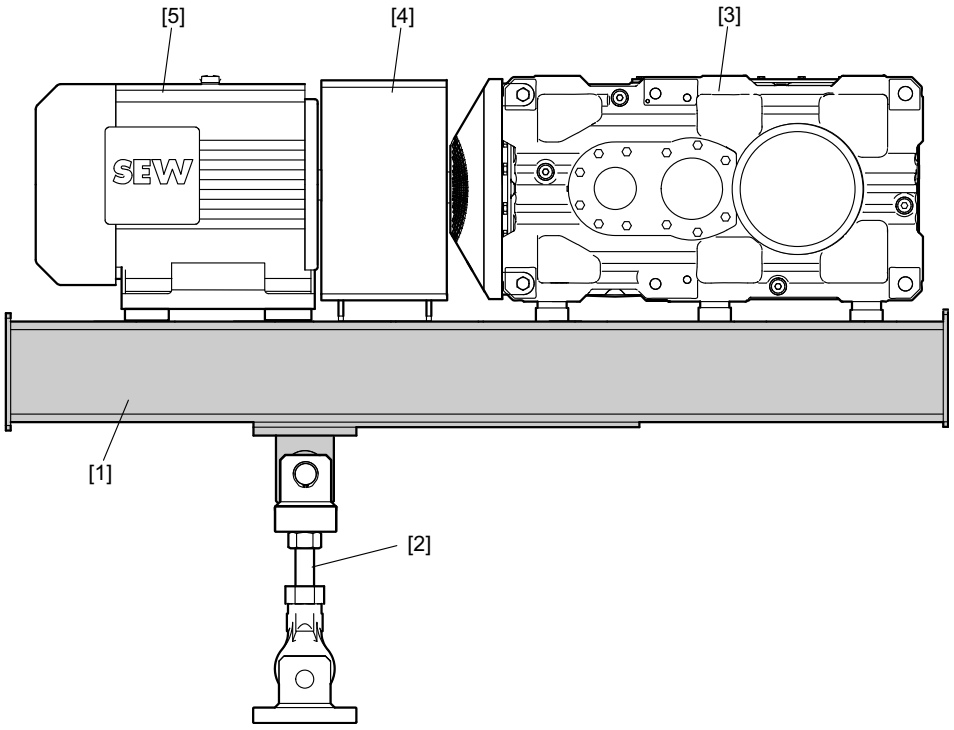

216568971

[1] Swing base
[2] Torque arm (optional)
[3] Bevel-helical gear unit
[4] Coupling with protection cover
[5] Motor

4.10.2 Base frame /BF

For gear units in a horizontal mounting position, complete pre-assembled drive packages on a base frame are available.

A base frame is a steel frame [1] that accommodates the gear unit, (hydro) coupling and motor (and brake, if required), including protection devices, such as guards, etc. The steel frame is supported by several foot mountings [2]. Such a frame is usually used for solid shaft gear units with elastic coupling on the output shaft.

Example: Base frame with coupling

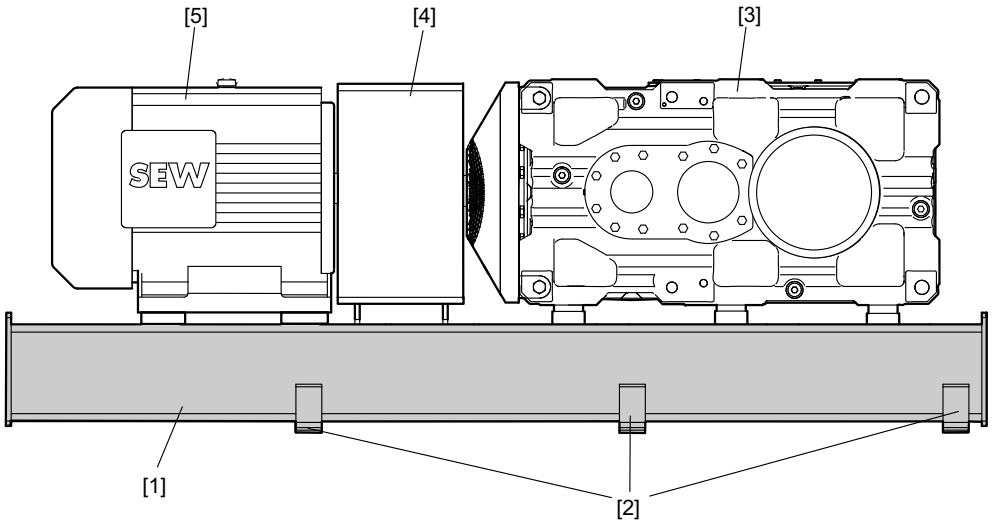

[1] Base frame
[2] Foot mounting
[3] Bevel-helical gear unit
[4] Protection cover for coupling
[5] Motor

4.11 Cooling types

4.11.1 Fan cooling

A fan is installed on the gear unit input shaft. Its airflow improves the transmission of heat from the gear unit surface to the environment. Refer to chapter "Fan" for further information.

4.11.2 Built-in cooling

This refers to cooling systems installed directly in the gear unit housing or mounted very close to it, e.g. a water cooling cover or a water cooling cartridge.

4.11.3 Circulation cooling

The gear unit oil is pumped out of the gear unit to an external heat exchanger by a pump (motor pump or shaft end pump). This normally involves oil supply systems with oil/water or oil/air heat exchangers.

4.12 Fan /FAN

To raise the thermal rating or when the ambient conditions change after gear unit startup, a fan may be retrofitted. The direction of rotation of the gear unit does not influence the operation of the fan.

The following types of fans are available:

4.12.1 X.F.. Fan (standard) /FAN

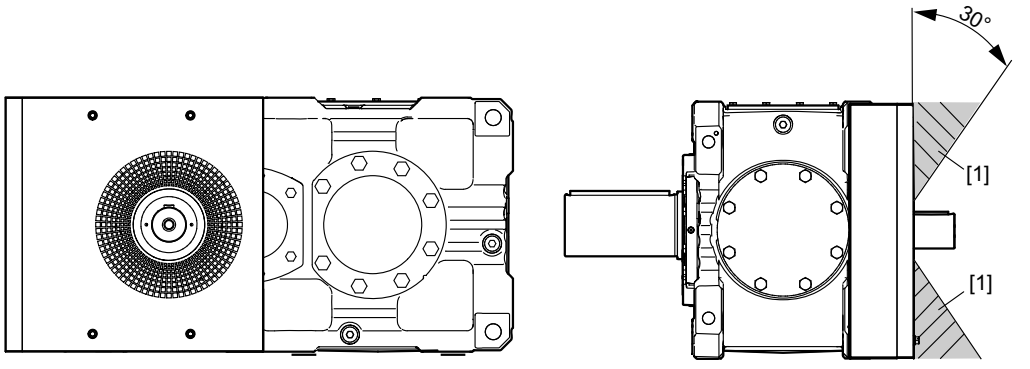

674444299

[1] Air intake clearance

4.12.2 X.K.. Fan (standard) /FAN

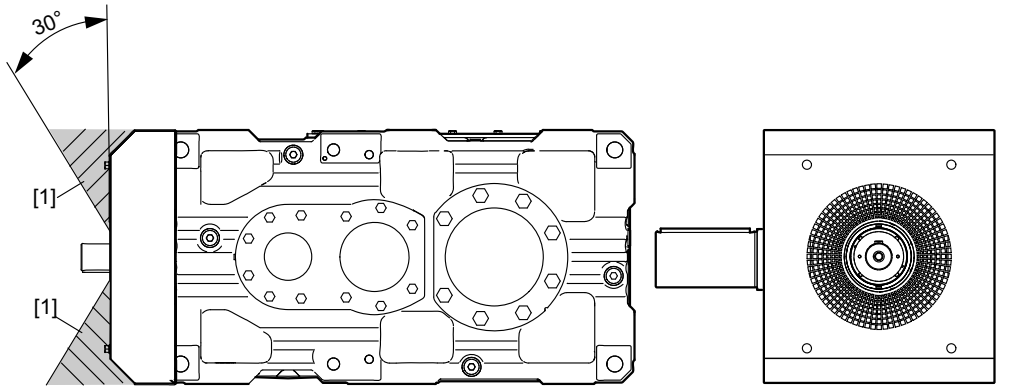

[1] The air intake must be kept clear

4.12.3 X3K.. Advanced (option) /FAN-ADV

When the type X3K.. Advanced is used, the connection element (e.g. hydraulic centrifugal coupling) can be mounted flush to the fan guard.

The air intake clearance is integrated into the fan guard.

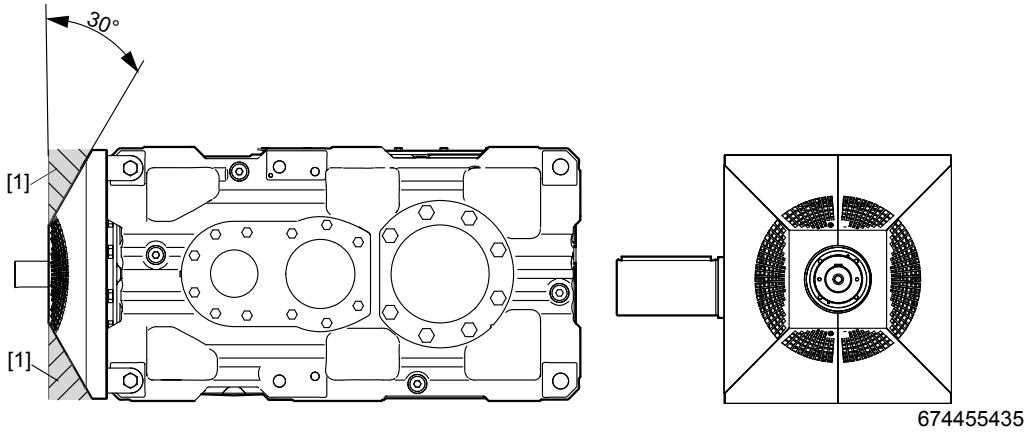

[1] Air intake clearance

INFORMATION

The X3K.. Advanced fan cannot be used together with a torque arm because the fan guard is mounted to the attachment point of the torque arm.

4.13 Water cooling cover /CCV

The water cooling cover is located on the gear unit's assembly opening and is provided with cooling water through a water connection. The customer is to provide for the water connection.

The amount of heat that can be dissipated depends on the intake temperature and the flow rate of the cooling medium that flows through the unit. The data given in the technical specifications must be observed.

INFORMATION

Consult SEW-EURODRIVE if you use chemically aggressive cooling media, such as brackish water or salt water.

4.13.1 Structure

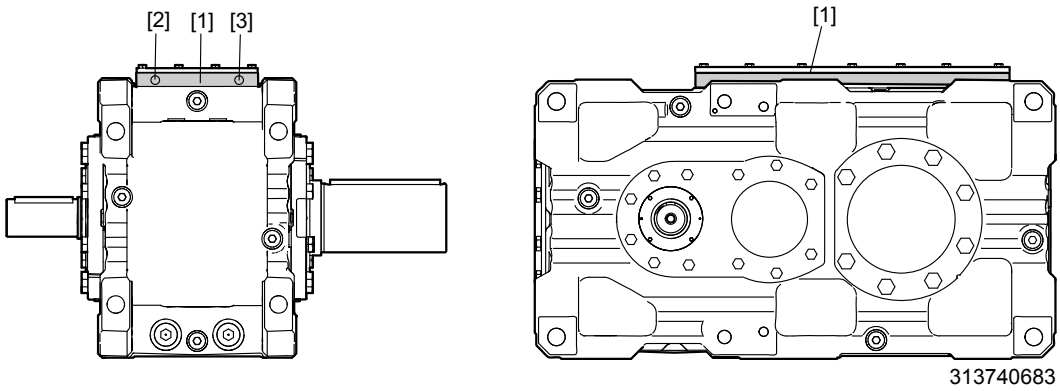

[1] Water cooling cover
[2] Supply
[3] Return

The water cooling cover [1] is made of a corrosion-resistant aluminum alloy. Two bores with pipe threads are available to connect to the cooling circuit.

- Sizes X100-130: G3/8"
- Sizes X180-210: G1/2"

The piping is not included in the delivery. Gear units with water cooling cover are delivered completely assembled.

A water cooling cover can be retrofitted. Consult SEW-EURODRIVE.

4.13.2 Notes on connection and operation

A cooling water volume flow (water inflow temperature 15 °C) depending on the gear unit size is necessary according to the following table to achieve the thermal rating given in the catalog. The cooling capacity of the water cooling cover changes when the cooling water quantity or temperature changes or when specific cooling media are used. Consult SEW-EURODRIVE if required.

Size	Cooling water flow rate [l/min]	Size	Cooling water flow rate [l/min]
X100-110	4	**X180-190**	8
X120-130	5	**X200-210**	11

4.14 Water cooling cartridge /CCT

The water cooling cartridge is mounted in the gear unit's oil sump and is provided with cooling water through a water connection. The customer is to provide for the water connection.

The amount of heat that can be dissipated depends on the inlet temperature and the flow rate of the cooling medium flowing through it. For the number of water cooling cartridges, refer to the technical specification. The data given in the technical specifications must be observed.

INFORMATION

Consult SEW-EURODRIVE if you use chemically aggressive cooling media, such as brackish water or salt water.

4.14.1 Structure

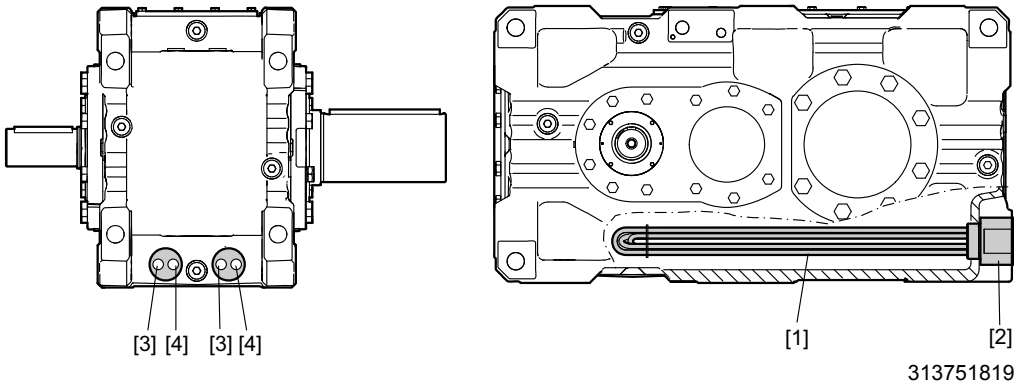

[1] Cooling pipes
[2] Tube plate with adapter piece
[3] Return
[4] Supply

The water-cooling cartridge consists of 3 main parts:

- Cooling pipes (CuNi alloy)
- Tube plate (brass)
- Adapter piece (brass; gray cast iron; steel)

Two bores with pipe threads are available to connect to the cooling circuit:

- Pipe thread G1/4" for sizes X140-170
- Pipe thread G1/2" for sizes X180-320

The piping is not included in the scope of delivery.

Gear units with water-cooling cartridge are delivered completely assembled.

Water-cooling cartridges can be retrofitted (with limitations). Consult SEW-EURODRIVE.

INFORMATION

The cooling circuit must be connected in parallel for gear units with two water cooling cartridges. Observe chapter "Built-in cooling – water cooling cartridge" (page 181).

4.14.2 Notes on connection and operation

To achieve the thermal rating specified in the selection tables of the X.. Series Industrial Gear Units catalog, different cooling water flow rates are required depending on the size, mounting position, and type of lubrication. The following table lists approximate values for the flow rate for the M5 mounting position (water inflow temperature 15 °C).

Contact SEW-EURODRIVE when using another cooling water flow rate, another cooling water temperature, special cooling media (the cooling capacity of the water cooling cartridge changes), aggressive cooling media, such as brackish water or salt water.

The cooling water quantity has to be dimensioned individually for each cooling cartridge.

Twice the cooling water flow rate is required for 2 cooling cartridges.

Size	Cooling water flow rate [l/min] / per cooling cartridge			Max. cooling water flow rate [l/min]
	2-stage	3-stage	4-stage	
X140-150	10	8	3	15
X160-170	12	10	4	
X180-190	16	13	5	28
X200-210	19	15	6	
X220-230	23	19	8	
X240-250	24	21	9	
X260-270	17	16	6	25
X280-300	18	18	7	
X310-320	22	22	9	

4.15 Oil-water cooler for splash lubrication /OWC

INFORMATION

For descriptions on the unit structure, refer to the manufacturer's documentation and the addendum to the operating instructions "Oil-water cooler for splash lubrication /OWC".

4.16 Oil-air cooler for splash lubrication /OAC

INFORMATION

For descriptions on the unit structure, refer to the manufacturer's documentation and the addendum to the operating instructions "Oil-air cooler for splash lubrication /OAC".

4.17 Oil-water cooler for pressure lubrication /OWP

INFORMATION

For descriptions of the unit structure, refer to the manufacturer's documentation and the addendum to the operating instructions "Oil-water cooler for pressure lubrication /OWP".

4.18 Oil-air cooler for pressure lubrication /OAP

INFORMATION

For descriptions of the unit structure, refer to the manufacturer's documentation and the addendum to the operating instructions "Oil-air cooler for pressure lubrication /OAP".

4.19 Oil heater /OH

An oil heater may be required to ensure lubrication during a cold gear unit startup when the ambient temperature is low.

4.19.1 Structure

The oil heater consists of two basic parts:

1. Heating element in the oil sump ("oil heater") with connection unit
2. Thermostat with integrated temperature sensor

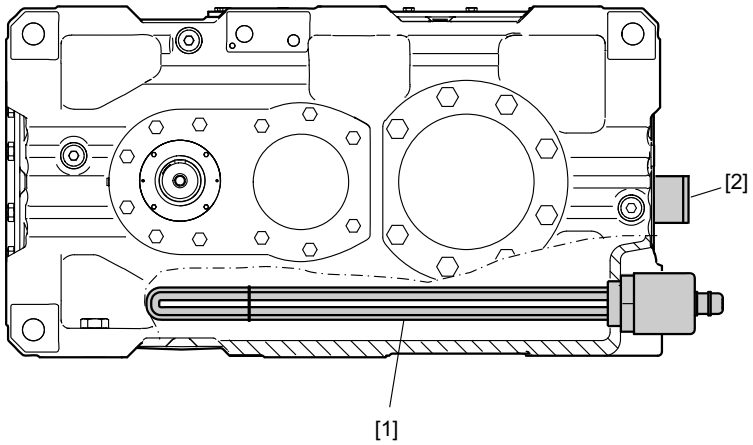

[1] Oil heater
[2] Thermostat with integrated temperature sensor

INFORMATION

The position of the thermostat varies with variant and mounting position of the gear unit.

4.20 Pressure switch /PS

All gear units with pressure lubrication are equipped with a pressure switch for function monitoring.

The pressure switch is to be connected and integrated into the system in such a way that the gear unit can only be operated when the oil pump is building up pressure. A short-term compensation (max 20 s) during startup is permitted.

Customers are responsible for the electrical connection and the evaluation of the signal.

4.21 Temperature sensor /PT100

A temperature sensor PT100 can be used to measure the temperature of the oil in the gear unit.

The temperature sensor is located in the gear unit's oil sump. The exact position depends on the gear unit version and position of the shaft.

4.22 Temperature switch /NTB

A temperature switch with preset switching temperatures of 70, 80, 90 or 100 °C is used for monitoring the gear unit oil temperature.

For various functions, the temperature switch is also used as limit value switch, for example

- a pre-alarm

  or

- main alarm for switching off the main motor.

To guarantee a long service life and functioning under all conditions, it is recommended to use a relay in the power circuit instead of a direct connection through the temperature switch.

The temperature switch is located in the gear unit's oil sump. The exact position depends on the gear unit version and position of the shaft.

4.23 Temperature switch /TSK

The TSK temperature switch is used with oil supply systems for circulation cooling. It is provided with two fixed switching points (60 °C and 90 °C) for controlling and monitoring the system.

The temperature switch is integrated into the circuit of the oil supply system as follows:

- The cooling system is activated when the oil temperature reaches 60 °C
- Warning signal or disconnection of the gear unit when the oil temperature exceeds 90 °C (usually a sign of malfunction in the oil supply system)

To guarantee a long service life and functioning under all conditions, it is recommended to use a relay in the power circuit instead of a direct connection through the temperature switch.

The temperature switch is located in the gear unit's oil sump. The exact position depends on the gear unit version and position of the shaft.

4.24 Diagnostic unit DUV30A (vibration diagnostics)

The DUV30A diagnostic unit provides a vibration diagnostics value by evaluating vibration signals of the gear unit using the frequency analysis method.

A micromechanical acceleration pickup, built into the diagnostic unit, is used as the sensor. The unit allows to monitor up to 5 different objects (bearings, etc.) or individual 20 frequencies (imbalance, gear meshing frequencies, etc.). Further, a frequency-dependent level monitor, for monitoring impacts or vibrations, can also be activated. The objects to be monitored are defined using external software and are transferred to the diagnostic unit via RS232 interface.

The damage progress is indicated by a series of LEDs on the DUV30A diagnostic unit. Two switching outputs are available for connecting the diagnostic unit.

- Early warning:

  The early warning signals that the early warning threshold of one of the objects (bearings, etc.) has been exceeded, in this way warning of a beginning damaging process.

- Main alarm:

  The main alarm signals that the main alarm threshold of one of the objects (bearings, etc.) has been exceeded, in this way warning of upcoming damage.

After startup of the drive to be monitored and the diagnostic unit, a comparison measurement ("teach-in") is carried out and stored in the diagnostic unit. During operation, the current measurements and the teach-in values are compared, and a trend analysis is carried out. Changes to this relationship (measured value: teach-in value) indicate the early phase of possible damage.

The maximum operating range is 120 to 10000 rpm or 12 to 3500 rpm (shaft speed) depending on the setting at a minimum measuring time of 0.8 or 8 seconds per object. The diagnostic unit can be operated either with constant or variable speed, whereby the actual measurement can only occur during constant speed.

NOTE

You find more information on the evaluation unit in the "DUV30A Diagnostic Unit" manual, order number 16710002.

4.25 Diagnostic unit /DUO10A (oil aging)

If specified in the order, the gear unit can be equipped with a DUO10A diagnostic unit. The DUO10A diagnostic unit is used for planning oil change intervals.

The diagnostic unit consists of a PT100 temperature sensor and an evaluation unit. The temperature sensor installed in the gear unit measures the present gear unit oil temperature. The diagnostic unit calculates the estimated remaining service life for the gear unit oil based on the measured oil temperature. This calculated value is continuously shown on the display of the evaluation unit; when needed, the display can be changed to the current gear unit oil temperature.

INFORMATION

You find more information on the evaluation unit in the "DUV10A Diagnostic Unit" manual, order number 11425016.

5 Assembly/Installation

5.1 Required tools/resources

Not included in the scope of delivery:

- Set of wrenches
- Torque wrench
- Mounting device
- Compensation elements (shims, spacing rings)
- Fasteners for input and output elements
- Lubricant (e.g. NOCO® fluid from SEW-EURODRIVE) → except for hollow shaft gear units
- For hollow shaft gear units → aids for assembly/disassembly onto the machine shaft
- Fastening parts for the gear unit base

5.2 Tolerances

Observe the following tolerances.

5.2.1 Shaft end

Diameter tolerance in accordance with DIN 748:

Ø = Smooth output shaft / ..R→ ISO v6

Ø = Output shaft as a solid shaft with key /..S → ISO m6

Center bores according to DIN 332, part 2 (type D..):

Ø > 16...21 mm	→ M6	Ø > 50...85 mm	→ M20
Ø > 21...24 mm	→ M8	Ø > 85...130 mm	→ M24
Ø > 24...30 mm	→ M10	Ø > 130...225 mm[1)]	→ M30
Ø > 30...38 mm	→ M12	Ø > 225...320 mm[1)]	→ M36
Ø > 38...50 mm	→ M16	Ø > 320...500 mm[1)]	→ M42

1) Dimensions not according to DIN 332; the thread depth including the counterbore is at least twice that of the nominal thread diameter

Keys according to DIN 6885 (domed type)

5.2.2 Hollow shaft

Diameter tolerance:

- Ø → ISO H7 for hollow shafts with shrink disk
- Ø → ISO H8 for hollow shafts with keyway

5.2.3 Mounting flange

Centering shoulder tolerance: ISO f7

5.3 Important notes



⚠ WARNING

Risk of crushing if the drive starts up unintentionally.

Severe or fatal injuries.

- De-energize the motor before you start working on the unit.
- Secure the motor against unintended power-up.



⚠ WARNING

A customer machine that is not appropriately secured can fall during gear unit installation or removal.

Severe or fatal injuries.

- Protect the operator's machine against unintentional movement when installing or removing the gear unit.
- Before releasing shaft connections, make sure there are no active torsional moments present (tensions within the system).



⚠ WARNING

Risk of burns due to hot gear unit and hot gear unit oil.

Serious injury.

- Let the gear unit cool down before you start working on it.
- Remove the oil level plug and the oil drain plug with great care.



⚠ CAUTION

Danger due to unsecured mount-on components, e.g. keys.

Potential risk of crushing due to falling parts.

- Install appropriate protective devices.
- Secure the mount-on components.



⚠ CAUTION

Risk of slipping due to lubricant leaking from damaged seals.

Minor injuries.

- Check the gear unit and mount-on components for leaking lubricant.



⚠ CAUTION

Risk of injury due to protruding parts.

Minor injuries.

- Gear units and mount-on components must not protrude into footways.



NOTICE

Improper installation and mounting may result in damage to the gear unit.

Possible damage to property.

- Observe the following notes.

- Make sure that the customer components are designed for the load.
- The gear units are delivered without oil fill as standard.

- The mounting position may only be changed after consultation with SEW-EURORIVE. The warranty will become void without prior consultation.
- The most important technical data is provided on the nameplate.

  Additional data relevant for operation is available in drawings, on the order confirmation or in any order-specific documentation.
- Do not modify the gear unit or the mount-on components without prior consultation of SEW-EURODRIVE.
- Protect rotating drive parts, such as couplings, gears, or belt drives from contact using suitable protection devices.
- Install/mount the gear unit only in the specified mounting position on a level, vibration-damping, and torsionally rigid support structure. Do not twist housing legs and mounting flanges against each other.
- Make sure that the oil level plugs and oil drain plug as well as the breather plugs are freely accessible.
- When installing a filter in the OAP and OWP cooling units, make sure there is sufficient height for removing the filter element and the filter hood.
- Use plastic inserts if there is a risk of electrochemical corrosion between the gear unit and the driven machine (connection between different metals such as cast iron and stainless steel). Also install the bolts with plastic washers. Always ground the gear unit housing.
- It is important that only authorized personnel is allowed to assemble gear head units with motors and adapters. Consult SEW-EURODRIVE.
- Do not weld anywhere on the drive. Do not use the drives as a ground point for welding work. Welding may destroy gearing parts and bearings.
- Units installed outdoors must be protected from the sun. Suitable protective devices are required, such as covers or roofs. Avoid any heat accumulation. The operator must ensure that foreign objects do not impair the function of the gear unit (e.g. falling objects or coverings).
- Protect the gear unit from direct cold air currents. Condensation may cause water to accumulate in the oil.
- Gear units are supplied with a coating suitable for use in damp areas or outdoors. Repair any damage to the paint work (e.g. on the breather plug).
- Do not modify the existing piping.
- For gear units that are filled with oil at the factory, check to see that the breather plug is installed before you start up the gear unit.
- Adhere to the safety notes in the individual chapters.

5.4 Prerequisite for assembly

Check that the following conditions have been met:

- The information on the motor's nameplate must match the voltage supply system.
- The drive has not been damaged during transportation or storage.
- The ambient temperature matches the information in the order documents.
- No harmful oils, acids, gases, vapors, radiation etc. in the vicinity
- You must clean the output shafts and flange surfaces thoroughly to ensure they are free of anti-corrosion agents, contamination or similar. Use a commercially available solvent. Do not expose the sealing lips of the oil seals to the solvent – damage to the material.

5.4.1 Extended storage of gear units

Important: The service life of the lubricant in the bearings is reduced if the unit is stored for ≥ 1 year (only applies to bearings with grease lubrication).

Replace the provided breather filter with the screw plug.

5.5 Installing the gear unit

5.5.1 Tightening torques: Foot-mounted gear units

The following table shows the thread sizes and the tightening torques of the individual gear unit sizes (foot mounting).

Size	Screw/nut	Tightening torque Strength class 8.8 [Nm]
X100-110	M20	464
X120-130	M24	798
X140-150	M30	1597
X160-170	M36	2778
X180-190		
X200-230	M42	3995
X240-280	M48	6022
X290-320	M56	9650

INFORMATION

The bolts must not be lubricated during assembly.

5.5.2 Tightening torques: Retaining screws of gear unit mount-on parts

Tighten the screws of gear unit mount-on parts and protection covers using the following tightening torque.

INFORMATION

The tightening torques do not apply to mounting types like flange coupling, torque arm, mounting flange, hollow shaft with shrink disk etc. Those are described in the individual chapters.

Screw/nut	Tightening torque Strength class 8.8 [Nm]
M6	11
M8	27
M10	54
M12	93

INFORMATION

The bolts must not be lubricated during assembly.

5.5.3 Foundation

To ensure quick and reliable gear unit mounting, the type of foundation should be correctly selected and the mounting carefully planned in advance. Appropriate foundation plans with all necessary construction and dimension details should be available.

To avoid harmful vibrations and oscillations, adequate rigidity must be ensured when mounting the gear unit on a steel construction. The foundation must be dimensioned according to weight and torque of the gear unit by taking account of the forces acting on the gear unit.

Tighten retaining screws or nuts to the specified torque. Use the screws and tightening torques specified in section "Gear unit mounting" (page 83).

NOTICE

An improper foundation may result in damage to the gear unit.

Possible damage to property.

- The foundation must be level and flat; the gear unit may not be deformed when the retaining screws are tightened. Unevenness must be leveled out appropriately.
- Observe the weight specified on the nameplate.

5.5.4 Aligning the shaft axis



⚠ WARNING

Shafts can break if shaft axes are not aligned exactly.

Severe or fatal injuries.

- Refer to the separate operation instructions regarding the requirements of the couplings.

The service life of the shafts, bearings and couplings depends on the precision of the alignment of the shaft axes with each other.

Always try to achieve zero misalignment. When doing so, you should also consult the special operating instructions regarding the requirements of the couplings, for example.

5.6 Filling gear units with oil / delivered without oil fill (standard)

5.6.1 General information

The gear unit is delivered without oil fill as standard.



⚠ WARNING

Risk of crushing if the drive starts up unintentionally.

Severe or fatal injuries.

- De-energize the motor before you start working on the unit.
- Secure the motor against unintended power-up.



NOTICE

Improper oil filling may cause damage to the gear unit.

Possible damage to property.

- Observe the following notes.

- Fill the oil only when the gear unit is in the intended mounting position.
- Make sure the oil has ambient temperature when filling it into the gear unit.
- For gear units with external supply pipes, e.g. oil supply systems, establish the connections prior to filling the oil.
- Observe the additional notes depending on the lubrication type in the following chapters.
- Fill the gear unit with the oil grade and oil quantity specified on the nameplate. The oil quantity specified on the nameplate is an approximate quantity. The mark on the oil level glass or oil dipstick is the decisive indicator for the correct oil level.

  The oil fill quantity is higher when additional attachments are mounted to the gear unit, such as an oil supply system. In this case, observe the respective SEW operating instructions "Oil Supply System". For more information, refer to chapter "Changing the oil" (page 224).
- Check the oil level at the oil level glass, oil dipstick or oil sight glass. For detailed information, refer to chapter "Checking the oil level" (page 216).
- Use a funnel to fill the oil (max. filter mesh 25 µm).

5.6.2 Gear units with oil expansion tank /ET

Observe the following conditions to make sure that the gear unit is filled properly:

- The temperature of the oil to be filled must generally be within 10 °C and 40 °C.
- In addition, the oil viscosity must not exceed 3500 mm^2/s during the filling process.

A higher minimum filling temperature might therefore be required depending on the selected oil type. The following table lists guide values.

Min. oil filling temperature [°C]		
Viscosity class	**mineral**	**synthetic**
ISO VG 220	10	10
ISO VG 320	10	10
ISO VG 460	15	10
ISO VG 680	20	15



NOTICE

An oil temperature outside the permitted range during the filling process may cause oil deficiency or oil leakage during operation.

Possible damage to property.

- Observe the oil temperature during the filling process.



NOTICE

An oil viscosity above the permitted level of 3500 mm^2/s may result in inadequate venting and an insufficient oil filling which could cause damage to the gear unit.

Possible damage to property.

- Observe the oil viscosity during the filling process.

5.6.3 Gear units with shaft end pump /SEP



NOTICE

Improper installation and mounting of the shaft end pump [1] can damage the gear unit.

Possible damage to property.

- Note the following:

- Fill the gear unit with the oil grade and oil quantity given on the nameplate, see chapter "Changing the oil" (page 224).
- Check the oil level at the oil level glass, oil dipstick or oil sight glass. For detailed information, refer to chapter "Checking the oil level" (page 216).
- Directly before taking the gear unit into operation the first time, open the screw plug [3] and fill the shaft end pump [1] completely with oil. After having filled the oil, close the screw plug [3].

  This procedure must be repeated after a standstill period of more than 6 months.

For more information, refer to chapter "Gear units with pressure lubrication" (page 205) and the manufacturer's documentation.

The following figures show the gear units in mounting positions M1, M4 and M5 with the corresponding screw plugs [3] and pressure switch [2].

Mounting position
M1

Size XF/XK160-320

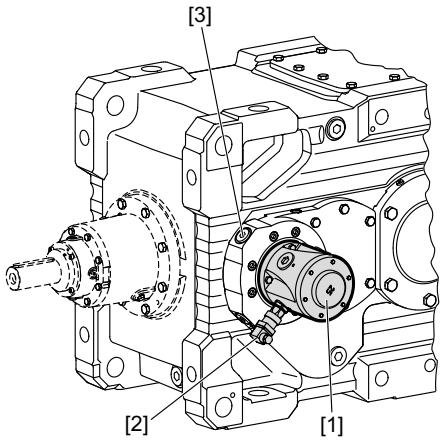

5186956299

Size X4T160-210

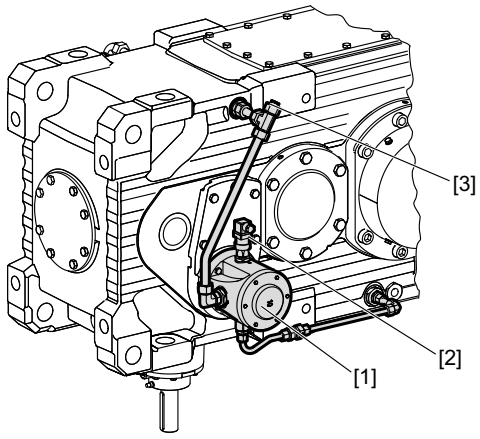

5428635659

Size X4T220-250

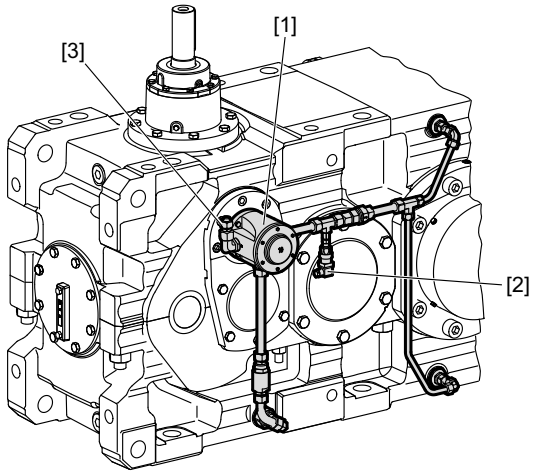

5490776843

Mounting position
M4

Size XF/XK 120-140	Size XF/XK 160- 320
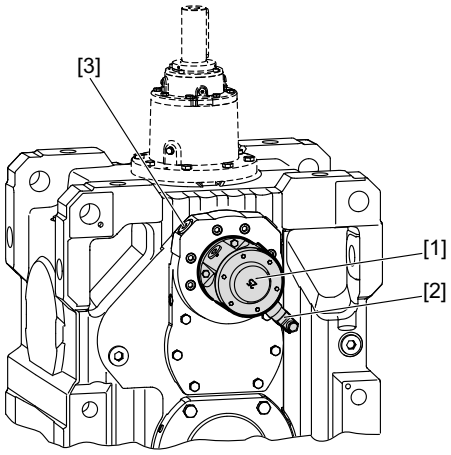 5186958475	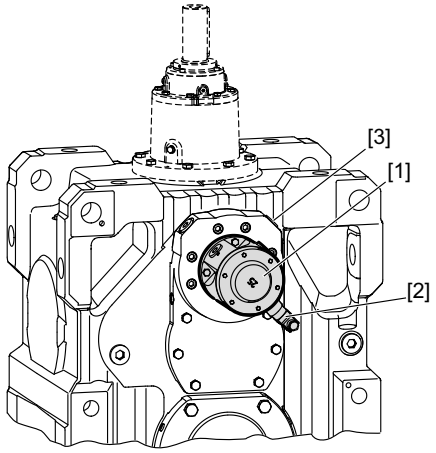 5380609803
Size X4T120-150	**Size X4T160-210**
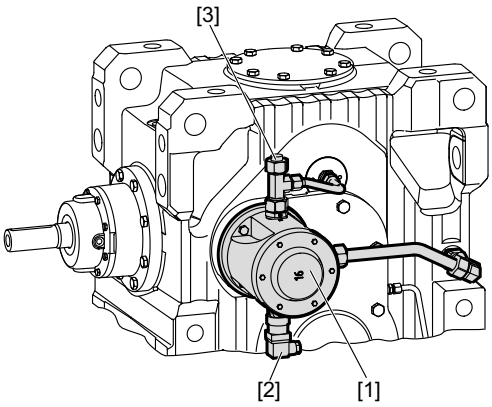 5490662027	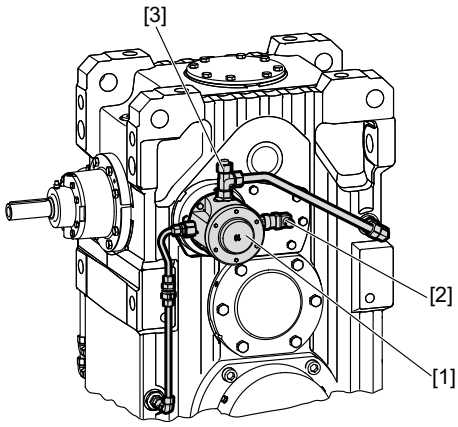 5432041867
Size X4T220-250	
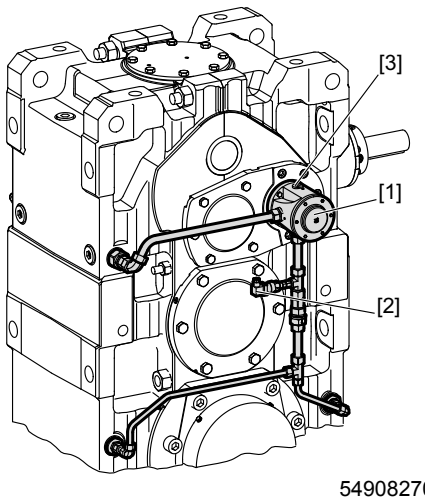 5490827019	

Mounting position M5

Size XF/XK 120-320

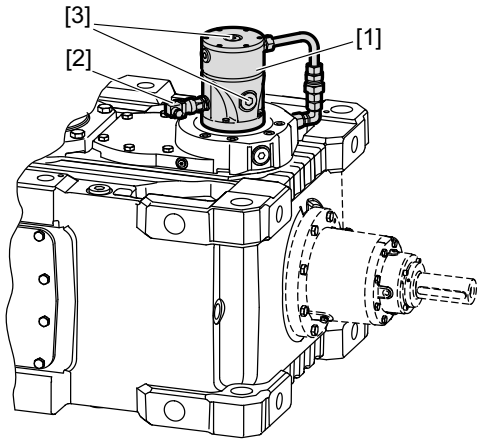

5192823051

If the shaft end pump [1] is mounted below the oil level, the pump need not be filled with oil.

Size XF/XK120 - X320

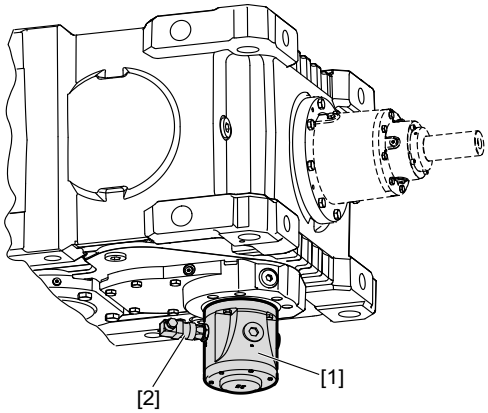

5192825227

Pressure switch

Gear units with shaft end pump [1] are equipped with a pressure switch [2] for function monitoring as standard. Connection has to be carried out by the customer. Observe chapter "Pressure switch" (page 199).

5.7 Gear units delivered with oil fill (option)

NOTICE

Improper startup can result in damage to the gear unit.

Possible damage to property.

- It is important that gear units with shaft end pump, motor pump or customer-installed cooling system is vented before taking them into operation the first time.

For gear units that are delivered with oil fill, the breather valve must be installed prior to startup. It is enclosed with the delivery.

The following illustration serves as an example. The position of the breather valve is specified in the order documents.

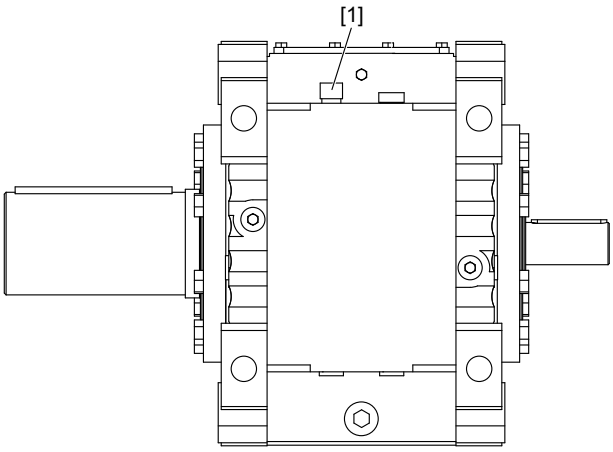

4688864907

1. Remove the closing plug.
2. Insert the breather valve [1].
3. Check the oil level. Refer to the chapter "Checking the oil level" (page 216).

5.8 Gear units with solid shaft

5.8.1 Mounting input and output components

NOTICE

Bearing, hosing or shaft might be damaged due to improper assembly.

Possible damage to property.

- Use only a mounting device for installing input and output elements. Use the center bore and the thread on the shaft end for positioning.
- Never force belt pulleys, couplings, pinions, etc. onto the shaft end by hitting them with a hammer. This may damage the bearing, the housing and the shaft.
- If belt pulleys are used, make sure the belt is tensioned correctly in accordance with the manufacturer's instructions.

The following figure shows a mounting device for installing couplings or hubs on gear unit or motor shaft ends. It may be possible to dispense with the thrust bearing on the mounting device.

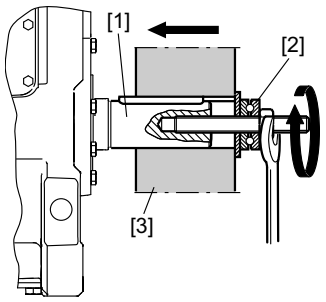

356867979

[1] Shaft end
[2] Thrust bearing
[3] Coupling hub
[4] Hub

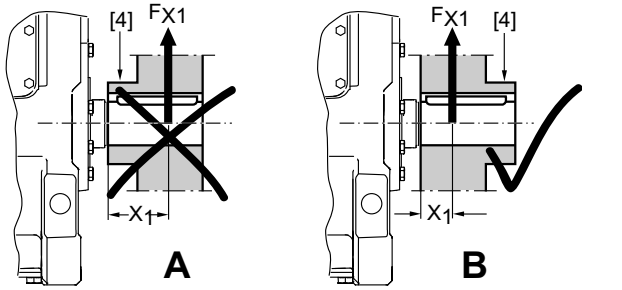

651876363

A Incorrect
B Correct

Avoid impermissibly high overhung loads: Install the gear or chain sprocket according to figure **B**.

INFORMATION

Mounting is easier if you first apply lubricant to the output element and/or heat it up briefly (80 ... 100 ˚C).

5.9 Flange couplings with cylindrical interference fit /FC

NOTICE

Improper installation and mounting may result in damage to the gear unit.

Possible damage to the gear unit.

- Gear units with rigid flange couplings cannot be additionally secured on the floor with a rigid connection. Foot mounting of the gear unit or using a base frame are therefore not permitted.

5.9.1 Dimensions of the machine shaft

INFORMATION

Make sure the dimensions of the machine shaft correspond to SEW specifications.

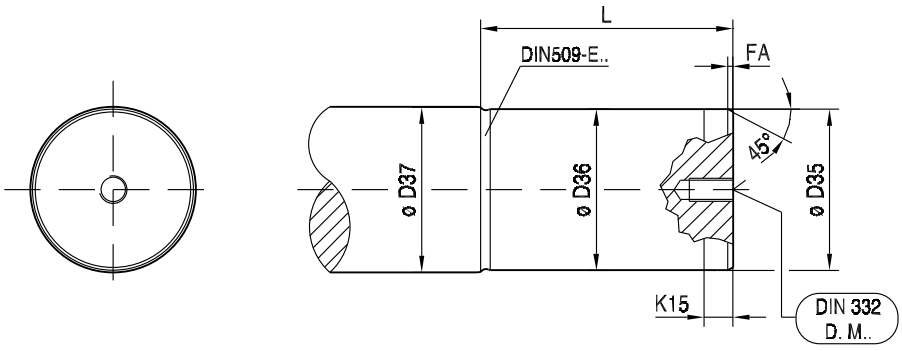

1658359563

	ø D35	ø D36	ø D37	FA	K15	L	DIN 332 D.M..	DIN 509
X..R100	85_{h9}	85_{v6}	90	2	9	131	M20	E2.5x0.4
X..R110	85_{h9}	85_{v6}	100	2	9	131	M20	E2.5x0.4
X..R120	115_{h9}	115_{v6}	120	2	9	165	M24	E2.5x0.4
X..R130	115_{h9}	115_{v6}	130	2	9	165	M24	E2.5x0.4
X..R140	135_{h9}	135_{v6}	140	3	11	202	M30	E2.5x0.4
X..R150	135_{h9}	135_{v6}	160	3	11	202	M30	E2.5x0.4
X..R160	165_{h9}	165_{v6}	170	2	11	222	M30	E2.5x0.4
X..R170	165_{h9}	165_{v6}	170	2	11	222	M30	E2.5x0.4
X..R180	175_{h9}	175_{v6}	180	3	14	253	M30	E2.5x0.4
X..R190	175_{h9}	175_{v6}	180	3	14	253	M30	E2.5x0.4
X..R200	195_{h9}	195_{v6}	200	3	14	283	M30	E2.5x0.4
X..R210	195_{h9}	195_{v6}	200	3	14	283	M30	E2.5x0.4
X..R220	235_{h9}	235_{v6}	240	3	14	298	M36	E2.5x0.4
X..R230	235_{h9}	235_{v6}	240	3	14	298	M36	E2.5x0.4
X..R240	275_{h9}	275_{v6}	280	4	14	318	M36	E2.5x0.4
X..R250	275_{h9}	275_{v6}	280	4	14	318	M36	E2.5x0.4
X..R260	275_{h9}	275_{v6}	280	4	14	318	M36	E2.5x0.4
X..R270	295_{h9}	295_{v6}	300	4	19	343	M36	E2.5x0.4
X..R280	295_{h9}	295_{v6}	300	4	19	343	M36	E2.5x0.4
X..R290	315_{h9}	315_{v6}	320	4	19	373	M36	E2.5x0.4
X..R300	315_{h9}	315_{v6}	320	4	19	373	M36	E2.5x0.4
X..R310	355_{h9}	355_{v6}	360	4	19	413	M42	E2.5x0.4
X..R320	355_{h9}	355_{v6}	360	4	19	413	M42	E2.5x0.4

5.9.2 Mounting the coupling onto the machine shaft

1. Clean the shaft and bore of the flange coupling thoroughly and remove any grease. The disassembly bores of the coupling must also be free from dirt.
   - **NOTICE** Improper mounting may result in damage to the coupling.

     Possible damage to property.

     – Make sure that the shaft and bore are completely free from grease to ensure proper functioning of the interference fit. Do not use assembly paste during assembly.

2. Heat the flange coupling to a joining temperature of 230 °C as long as no special joining temperature is specified for the order.
   - ⚠ **CAUTION** The required assembly clearance is achieved only by heating the coupling.

     CAUTION Danger of burns during the entire assembly process.

     – Make sure that hot parts cannot be touched unintentionally!
   - **NOTICE** Radiant heat from the flange coupling can damage adjacent elements.

     Possible damage to property.

     – Protect adjacent elements (e.g. oil seals) with suitable heat shields.

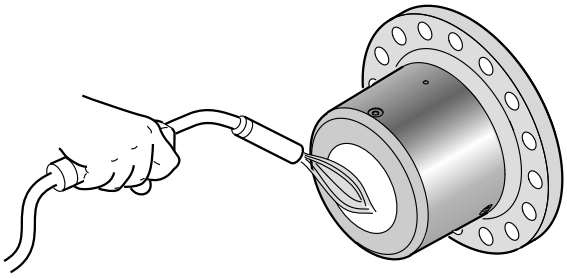

1153862283

3. Mount the flange coupling quickly onto the shaft up against the shaft shoulder.
   - **INFORMATION** Prepare mounting tools and plan the process carefully, so that the coupling can be fitted to the shaft quickly. During the cooling process, the coupling must be secured on the shaft.
   - **INFORMATION** Once the coupling has cooled down, spray the disassembly bores with clean mineral oil and close them using the supplied screw plugs.

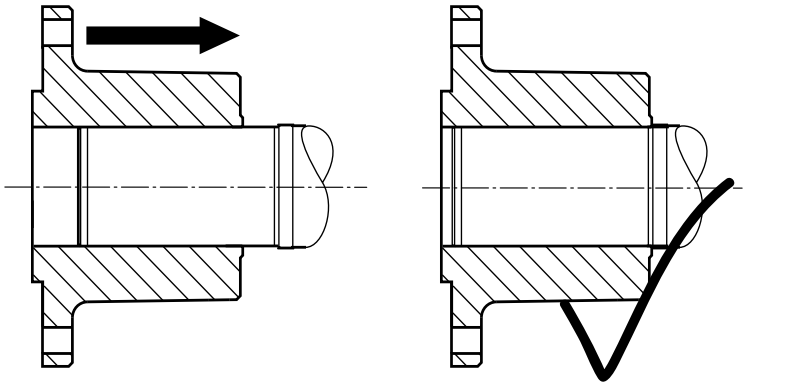

1153865867

5.9.3 Mounting the flange connection



NOTICE

Improper mounting may result in damage to the coupling.

Possible damage to property.

- Note that the flange coupling cannot compensate shaft misalignments.

1. Clean the flange surfaces [1] of the coupling halves [2].

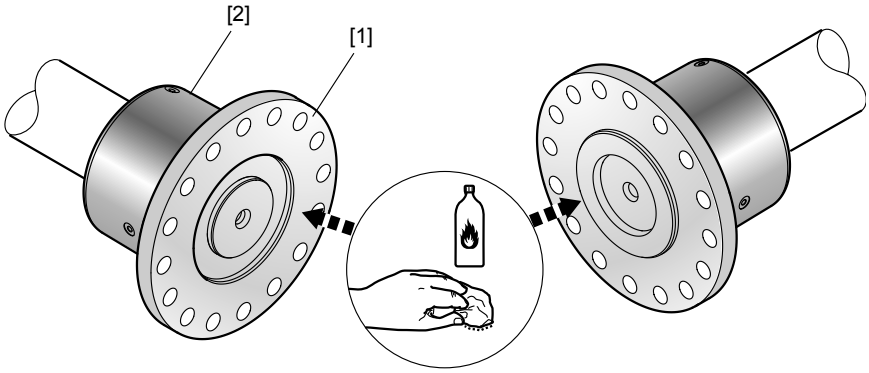

992697355

2. Align the bore patterns of the two coupling halves [2] and join the flange coupling.

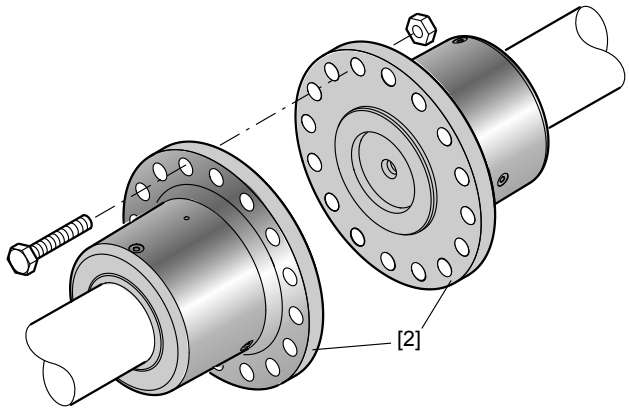

992700555

3. Mount the bolts [3] and tighten them in diametrically opposite sequence with the tightening torques in the following table.
   - **INFORMATION** Do not lubricate the bolts [3] during assembly.

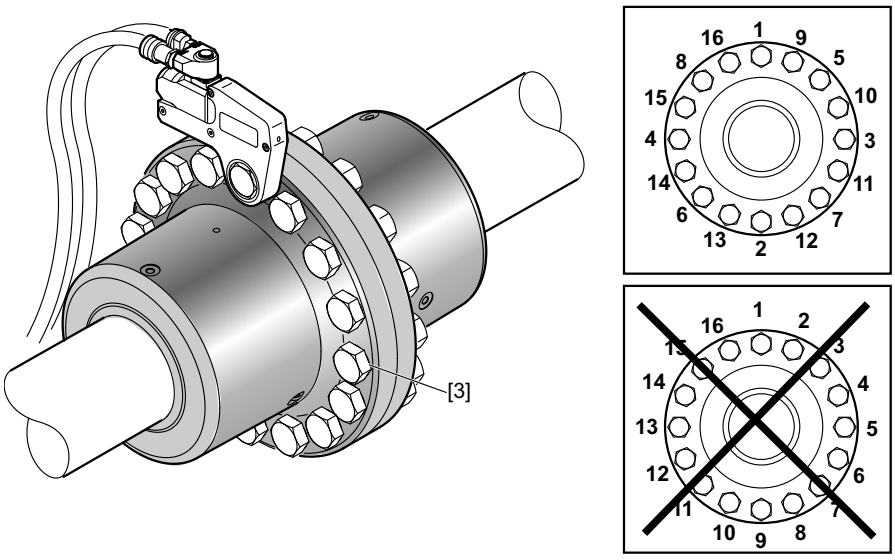

992703755

Size	Bolt size	Tightening torque Strength class 10.9 [Nm]
X100-110	M20	661
X120-130	M24	1136
X140-150	M30	2274
X160-170	M36	3957
X180-190		
X200-230	M42	5610
X240-280	M48	8475
X290-320	M56	13583

5.9.4 Removing the coupling from the shaft

Notes

⚠ CAUTION

Risk of jamming and crushing due to improper removal of heavy components.

Risk of injury.

- Disassemble the flange coupling properly.
- Observe the following disassembly instructions.

NOTICE

Improper disassembly may damage the output shaft bearing.

Possible damage to property.

- Do not apply any tools between the coupling and the gear unit housing.

To remove the coupling [1], the interference fit must first be widened hydraulically. The remaining holding force must then be overcome with a pull-off device [2]. The following figure shows an exemplary design of a hydraulic puller.

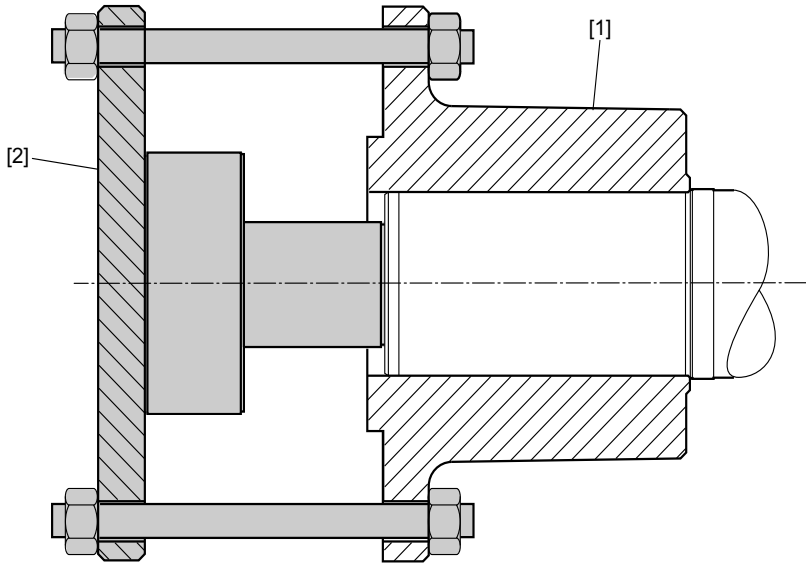

1071755147

For disassembling the coupling, one oil pump is required per disassembly bore.

The data required for the extractor is listed in the following table.

Size	Oil pressure required for disassembly [bar]	Number of disassembly bores/number of required oil pumps	Fitting of the pressure oil bores in the flange coupling	Required axial force of the pull-off device [kN]
X100-110	1600	2	G 1/4"	85
X120-130		2		115
X140-150		2		160
X160-170		2		190
X180-190		3		220
X200-210		3		280
X220-230		3		360
X240-260		3		420
X270-280		3		490
X290-300		3		550
X310-320		3		670

Procedure

1. Loosen the bolts [1] and separate the flange coupling. Remove the screw plugs [2] of the disassembly bores.
   - **INFORMATION** Prepare disassembly tools and the process carefully, so that the coupling can be removed from the shaft quickly.

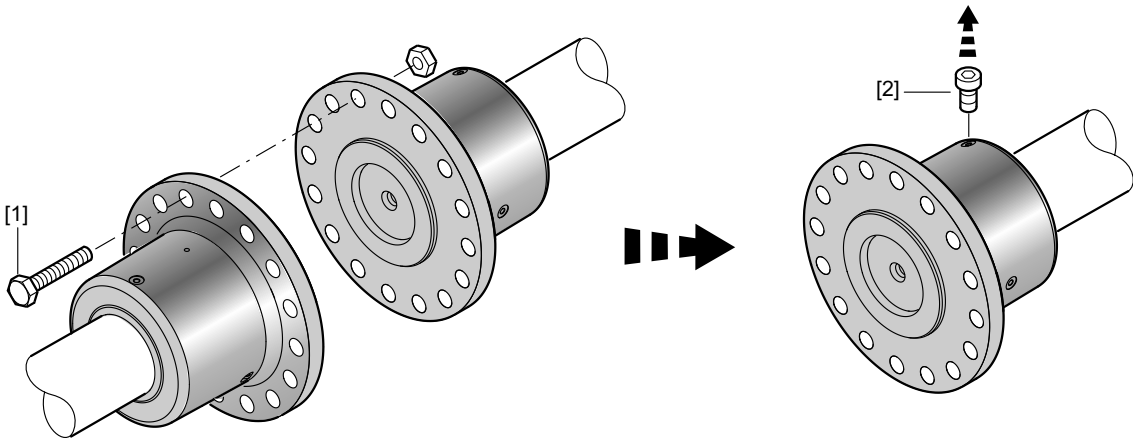

1105822859

2. Connect the first oil pump [3] to the disassembly bore closest to the flange [4] and apply pressure until oil comes out of the second disassembly bore [5]. Depending on the size, this bore can also be located on the flange surface of the coupling.
   - **INFORMATION** It is essential that you observe the safety notes of the manufacturers of the hydraulic devices during the disassembly process.

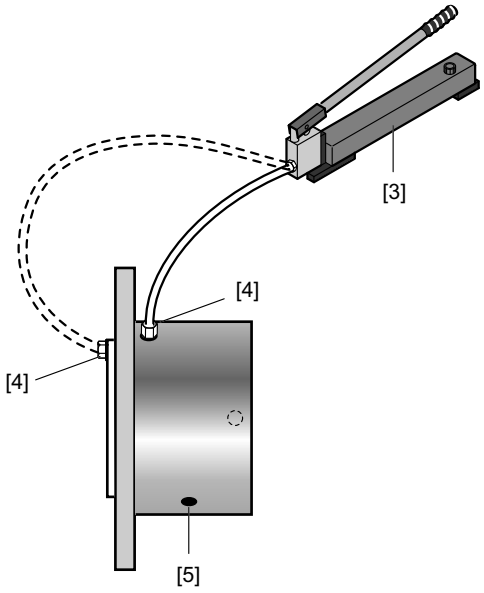

1000632331

3. Connect the next oil pump [6] to this bore [5] and press in oil until it comes out at the next disassembly bore [7].

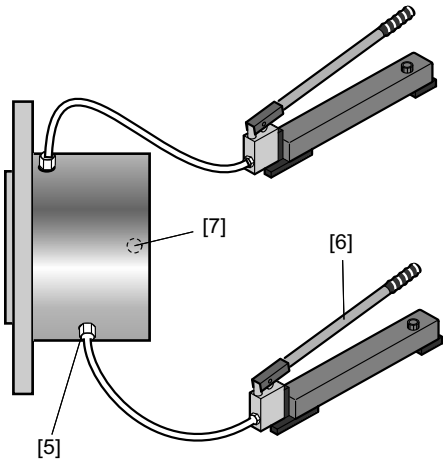

1002542475

4. Repeat this process until all disassembly bores are connected to an oil pump and pressure is applied. At the last disassembly bore [7], the pressure must be increased until at both front faces of the coupling [8] oil comes out in the shape of a ring.
   - **INFORMATION** The coupling can also be disassembled with only one oil pump. In this case, the individual disassembly bores must be blocked after pressure has been applied. Provide for a consistent pressure throughout the disassembly procedure.
   - **INFORMATION** Before removing the coupling, keep the oil pressure constant for 30 minutes to create an evenly distributed oil film inside the interference fit. The pressure must be kept constant during this time and the remaining disassembly process at all bores.

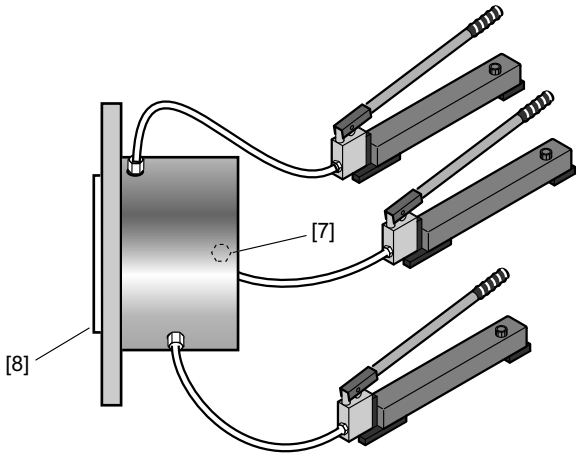

1002549387

5. Install the pull-off device [3]. Remove the coupling from the shaft. Since the oil pressure breaks down after the last disassembly bore has been reached, the required force for removing the coupling is significantly higher at the end.

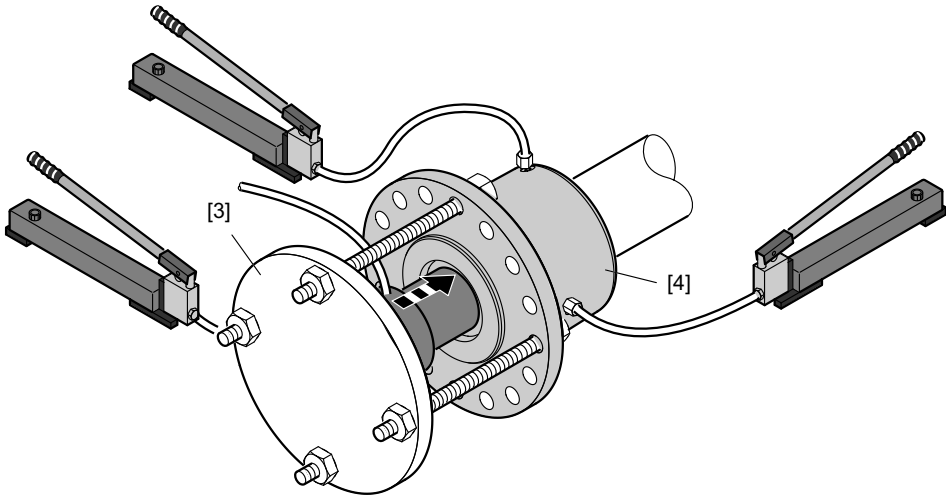

1000624651

6. Check the condition of the shaft and the coupling bore after the disassembly process. Damaged parts must be replaced.

5.10 Rigid flange couplings with keyway

5.10.1 Dimensions of the machine shaft

INFORMATION

Make sure the dimensions of the machine shaft correspond to SEW specifications.

5.10.2 Mounting the coupling onto the machine shaft

1. Make sure the dimensions of the machine shaft correspond to SEW specifications.
2. Clean the shaft and bore of the flange coupling thoroughly and remove any grease.
   - ⚠**NOTICE** Improper mounting may result in damage to the coupling.

     Possible damage to property.

     – Make sure that the shaft and bore are completely free from grease to ensure proper functioning of the interference fit / keyed connection. Do not use assembly paste during assembly.

3. Heat the flange coupling half [1] to a joining temperature of 130 °C unless a special joining temperature is specified for the order.
   - ⚠**CAUTION** The required assembly clearance is achieved only by heating the coupling.

     CAUTION Danger of burns during the entire assembly process.

     – Make sure that hot parts cannot be touched unintentionally.

   - ⚠**NOTICE** Radiant heat from the flange coupling half [1] can damage adjacent elements.

     Possible damage to property.

     – Protect adjacent elements (e.g. oil seals) with suitable heat shields.

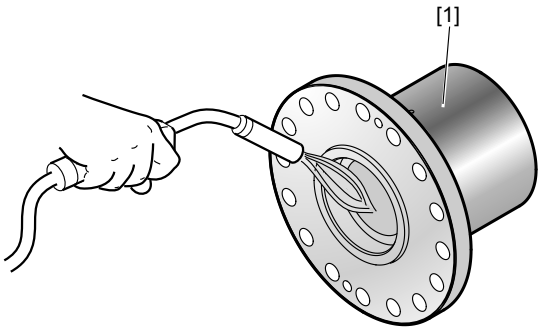

4349544459

4. Mount the flange coupling half [1] quickly onto the gear unit shaft all the way to the shaft shoulder [2].
   - **INFORMATION** Prepare mounting tools and plan the process carefully so that the coupling can be fitted to the shaft quickly. During the cooling process, the coupling must be secured on the shaft.

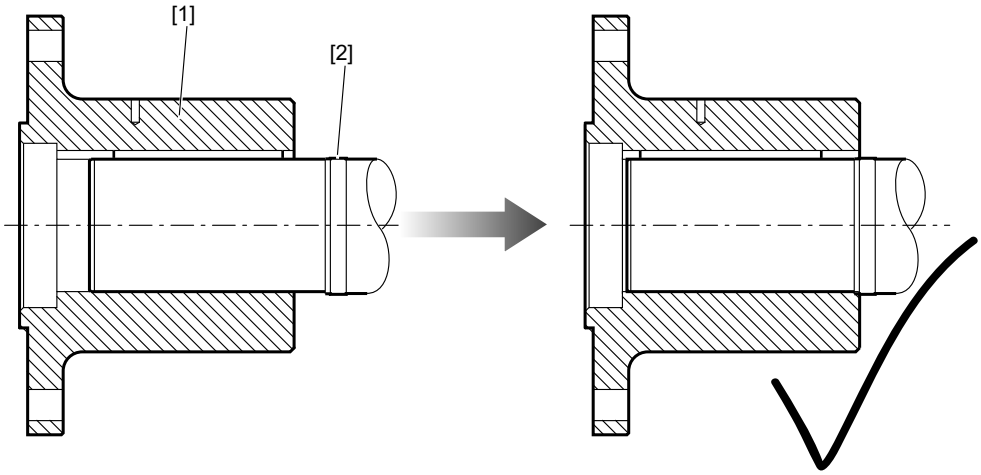

5.10.3 Mounting the flange connection

NOTICE

Improper assembly may damage the flange coupling.

Possible damage to property.

- Note that the flange coupling cannot compensate shaft misalignments.

1. Clean the flange surfaces [1] of the flange coupling halves [2].

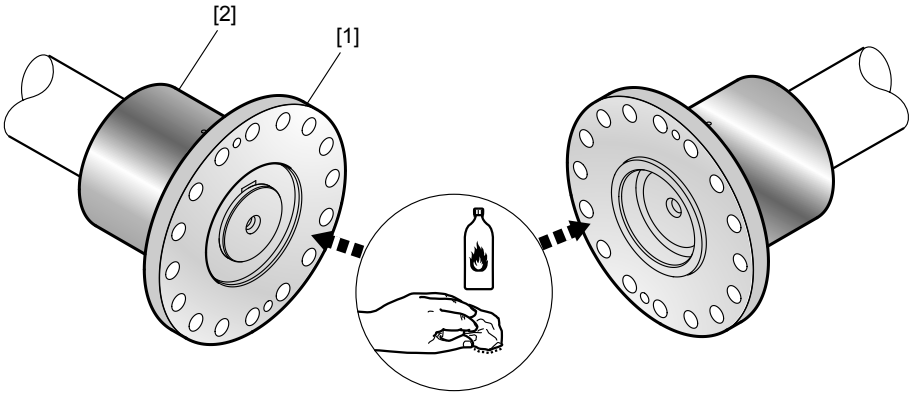

4349540107

2. Mount the end plate [3] to the gear unit shaft [5] with screws [4].

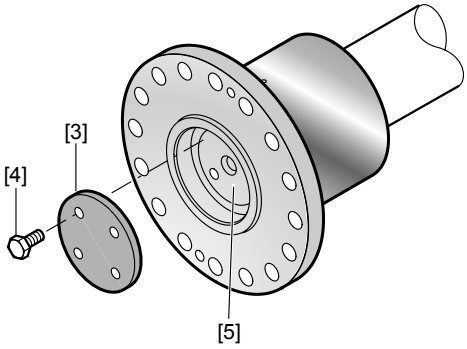

4364607755

3. Align the bore patterns of the two flange coupling halves [6] and join the flange coupling.

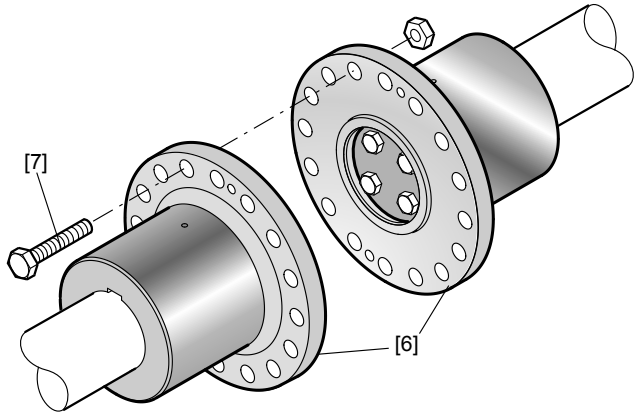

4349546635

4. Mount the bolts [7] and tighten them in diametrically opposite sequence with the tightening torques given in the following table.
   - **INFORMATION** Do not lubricate the bolts [3] during assembly.

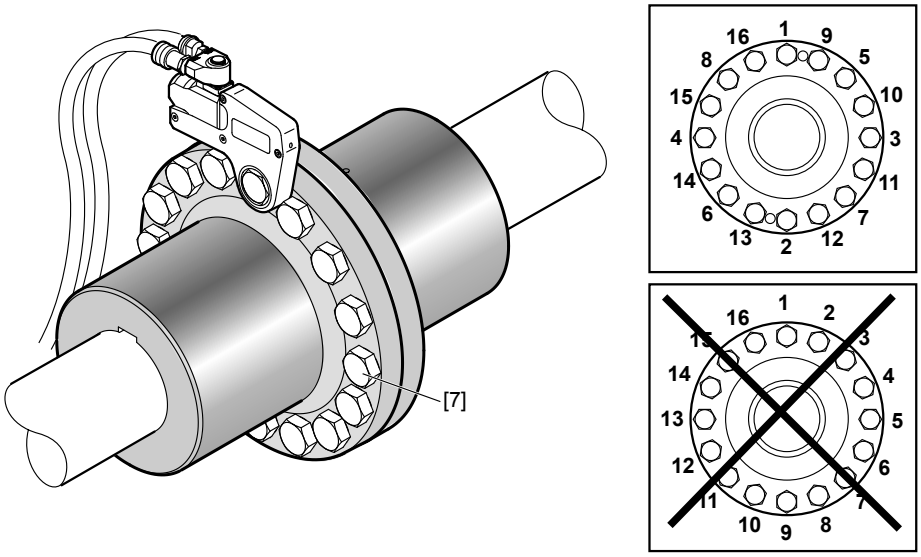

4355231243

Size	Bolt size	Tightening torque Strength class 10.9 [Nm]
X100-110	M20	661
X120-130	M24	1136
X140-150	M30	2274
X160-170	M36	3957
X180-190		
X200-230	M42	5610
X240-280	M48	8475
X290-320	M56	13583

5.10.4 Removing the coupling from the shaft

⚠ CAUTION

Risk of jamming and crushing due to improper removal of heavy components.

Risk of injury.

- Disassemble the flange coupling properly.
- Observe the following disassembly instructions.

NOTICE

Improper disassembly may damage the output shaft bearing.

Possible damage to property.

- Do not apply any tools between the coupling and the gear unit housing.

1. Loosen the bolts [7] and separate the flange coupling [6]
   - **INFORMATION** Prepare disassembly tools and the process carefully, so that the coupling can be removed from the shaft quickly.

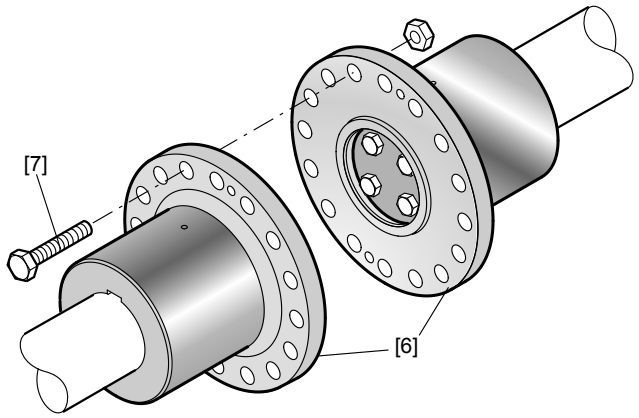

4349546635

2. Loosen the retaining screws [4] and remove the end plate [3] from the gear unit shaft [5].

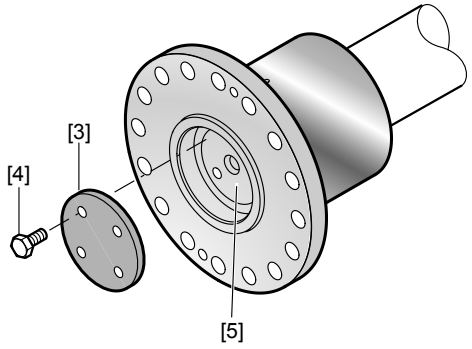

4364607755

3. Install the pull-off device [8]. Remove the flange coupling half [6] from the shaft [5].

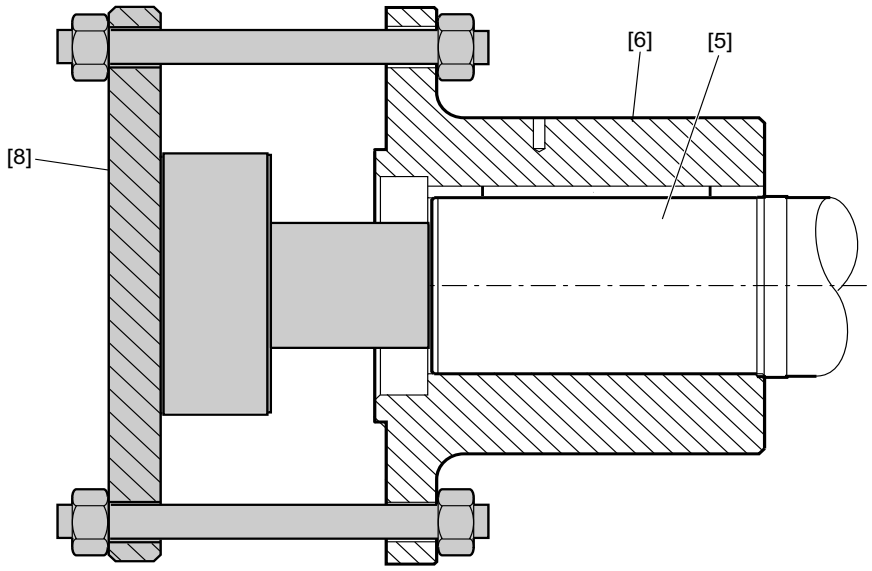

4349542283

4. Check the condition of the shaft and the flange coupling after the disassembly process. Damaged parts must be replaced.

5.11 Output shaft as a hollow shaft with keyed connection /..A

5.11.1 General information

The material of the machine shaft as well as the keyed connection should be dimensioned by the customer according to the loads that will occur. The shaft material should have a yield point of at least 320 N/mm^2.

The minimum key length given in the dimension sheets (see next page) must be observed. If a longer key is used, it should be aligned symmetrically to the hollow shaft.

With a through-going machine shaft or axial forces, SEW-EURODRIVE recommends that the machine shaft be designed with a contact shoulder. It should be secured with a suitable thread locker to prevent the retaining screw of the machine shaft from loosening in the case of a reversing load direction. If necessary, two eccentric retaining screws may be used.

5.11.2 Thread sizes/tightening torques

SEW-EURODRIVE recommends the following thread sizes and tightening torques:

Size	Recommended thread size		Tightening torque [Nm] Retaining screw [6][1)] Strength class 8.8
	Ejector screw [8][1)] (threads in the end plate)	• Threaded rod [2][1)] • Nut (DIN 934) [5][1)] • Retaining screw [6][1)] strength class 8.8	
X..A100	M24	M20	464
X..A110-150	M30	M24	798
X..A160-230	M36	M30	1597
X..A240-300	M42	M36	2778
X..A310-320	M48	M42	3995

1) see the next pages

Size	Thread size for 6 x retaining screws [3][1)] Strength class 10.9	Tightening torque		2 x retaining rings (bore) DIN 472
		Assembly/operating state [Nm]	Disassembly [Nm]	
X..A100	-	-	-	75x2.5
X..A110	-	-	-	85x2.5
X..A120	-	-	-	95x3
X..A130	-	-	-	105x4
X..A140	-	-	-	115x4
X..A150	-	-	-	125x4
X..A160	-	-	-	135x4
X..A170-190	M10x30	48	Apply hand pressure	-
X..A200-230	M12x30	86	Apply hand pressure	-
X..A240-300	M16x40	210	Apply hand pressure	-
X..A310-320	M20x50	410	Apply hand pressure	-

1) see subsequent pages

5.11.3 Dimensions of the machine shaft

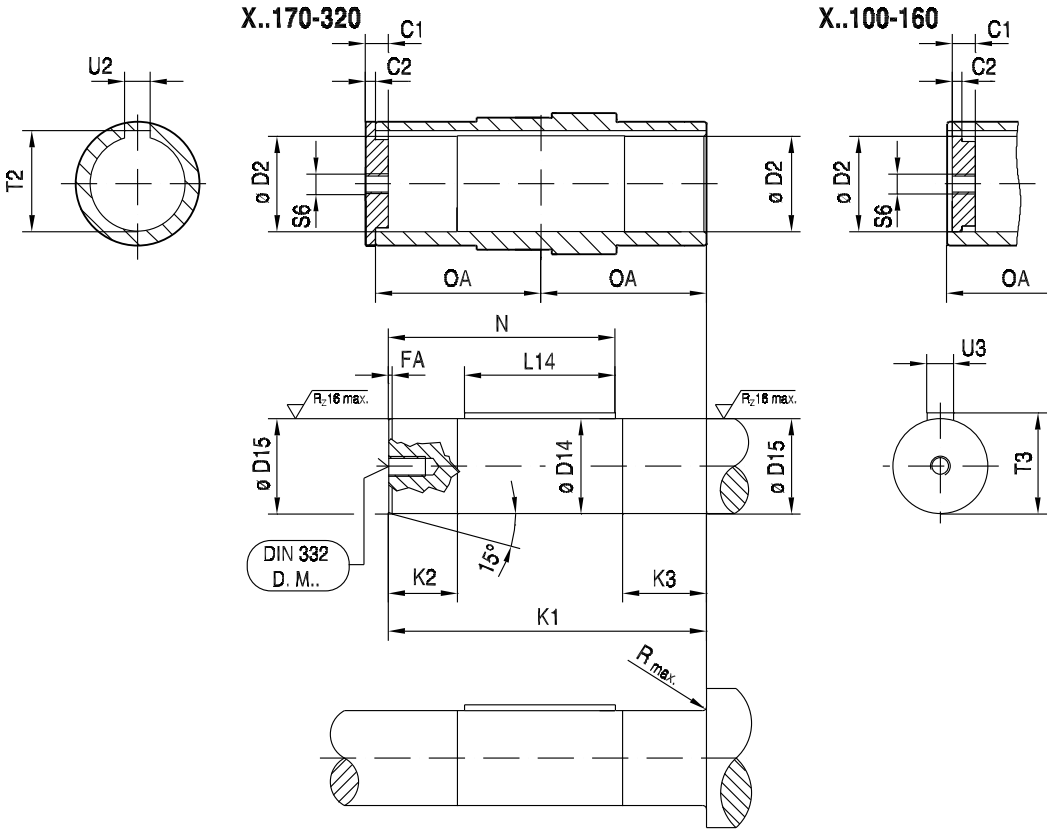

X.F/X.K X.T	C1	C2	ø D2	ø D14	ø D15	FA	K1	K2	K3	L14	N	OA	Rmax.	S6	T2	T3	U2	U3	DIN 332 D.M..
X..A100	25	12	75^{H8}	75_{h11}	75_{js7}	2	312	47.5	81	90	205	173	1.6	M24	80.4	80	20^{JS9}	20_{h9}	M20
X..A110	30	14	85^{H8}	85_{h11}	85_{js7}	2	312.5	45	84	100	210	176	1.6	M24	90.4	90	22^{JS9}	22_{h9}	M20
X..A120	30	14	95^{H8}	95_{h11}	95_{js7}	2	342	53	92	140	244.5	190.5	1.6	M30	100.4	100	25^{JS9}	25_{h9}	M24
X..A130	30	14	105^{H8}	105_{h11}	105_{js7}	2	347	68	109	160	258	194	1.6	M30	111.4	111	28^{JS9}	28_{h9}	M24
X..A140	30	14	115^{H8}	115_{h11}	115_{js7}	2	403	61	102	200	306	222	1.6	M30	122.4	122	32^{JS9}	32_{h9}	M24
X..A150	30	14	125^{H8}	125_{h11}	125_{js7}	3	408	76	117	200	308.5	224.5	1.6	M30	132.4	132	32^{JS9}	32_{h9}	M24
X..A160	36	16	135^{H8}	135_{h11}	135_{js7}	3	465	80	127	250	361	256	1.6	M36	143.4	143	36^{JS9}	36_{h9}	M30
X..A170	36	17	150^{H8}	150_{h11}	150_{js7}	3	493	96	115	280	377	256	1.6	M36	158.4	158	36^{JS9}	36_{h9}	M30
X..A180	36	17	165^{H8}	165_{h11}	165_{js7}	3	565	109	128	300	423	292	2	M36	174.4	174	40^{JS9}	40_{h9}	M30
X..A190	36	17	165^{H8}	165_{h11}	165_{js7}	3	565	109	128	300	423	292	2	M36	174.4	174	40^{JS9}	40_{h9}	M30
X..A200	36	17	180^{H8}	180_{h11}	180_{js7}	3	620	130	149	320	460.5	319.5	2	M36	190.4	190	45^{JS9}	45_{h9}	M30
X..A210	36	17	190^{H8}	190_{h11}	190_{js7}	3	620	130	149	320	460.5	319.5	2	M36	200.4	200	45^{JS9}	45_{h9}	M30
X..A220	36	17	210^{H8}	210_{h11}	210_{js7}	3	686	133	152	370	518.5	352.5	2.5	M36	221.4	221	50^{JS9}	50_{h9}	M30
X2KA220	36	17	210^{H8}	210_{h11}	210_{js7}	3	756	133	152	370	554	388	2.5	M36	221.4	221	50^{JS9}	50_{h9}	M30
X..A230	36	17	210^{H8}	210_{h11}	210_{js7}	3	686	133	152	370	518.5	352.5	2.5	M36	221.4	221	50^{JS9}	50_{h9}	M30
X2KA230	36	17	210^{H8}	210_{h11}	210_{js7}	3	756	133	152	370	554	388	2.5	M36	221.4	221	50^{JS9}	50_{h9}	M30
X..A240	45	22	230^{H8}	230_{h11}	230_{js7}	3	778	147	170	370	562.5	400.5	2.5	M42	241.4	241	50^{JS9}	50_{h9}	M36
X2KA240	45	22	230^{H8}	230_{h11}	230_{js7}	3	853	147	170	370	600	438	2.5	M42	241.4	241	50^{JS9}	50_{h9}	M36
X..A250	45	22	240^{H8}	240_{h11}	240_{js7}	3	778	147	170	370	562.5	400.5	2.5	M42	252.4	252	56^{JS9}	56_{h9}	M36
X2KA250	45	22	240^{H8}	240_{h11}	240_{js7}	3	853	147	170	370	600	438	2.5	M42	252.4	252	56^{JS9}	56_{h9}	M36
X..A260	45	22	240^{H8}	240_{h11}	240_{js7}	3	851	143	166	450	639	437	2.5	M42	252.4	252	56^{JS9}	56_{h9}	M36
X..A270	45	22	275^{H8}	275_{h11}	275_{js7}	4	877	158	181	450	652	450	5	M42	287.4	287	63^{JS9}	63_{h9}	M36
X..A280	45	22	275^{H8}	275_{h11}	275_{js7}	4	877	158	181	500	677	450	5	M42	287.4	287	63^{JS9}	63_{h9}	M36
X..A290	45	22	290^{H8}	290_{h11}	290_{js7}	4	961	160	183	500	719	492	5	M42	302.4	302	63^{JS9}	63_{h9}	M36
X..A300	45	22	290^{H8}	290_{h11}	290_{js7}	4	961	160	183	500	719	492	5	M42	302.4	302	63^{JS9}	63_{h9}	M36
X..A310	55	28	320^{H8}	320_{h11}	320_{js7}	4	1030	170	197	560	781.5	528.5	5	M42	334.4	334	70^{JS9}	70_{h9}	M36
X..A320	55	28	320^{H8}	320_{h11}	320_{js7}	4	1030	170	197	560	781.5	528.5	5	M42	334.4	334	70^{JS9}	70_{h9}	M36

5.11.4 Mounting the gear unit onto the machine shaft

INFORMATION

Make sure the dimensions of the machine shaft correspond to SEW specifications → see previous page.

Sizes X100-160

INFORMATION

- Included in the delivery:
  - 2 x retaining rings [8]/[9] and end plate [4]
- **Not** included in the delivery:
  - Threaded rod [2], nut [5], retaining screw [6], ejector screw [8]

1. Apply NOCO® fluid to the hollow shaft [7] and the shaft end of the machine shaft [1].

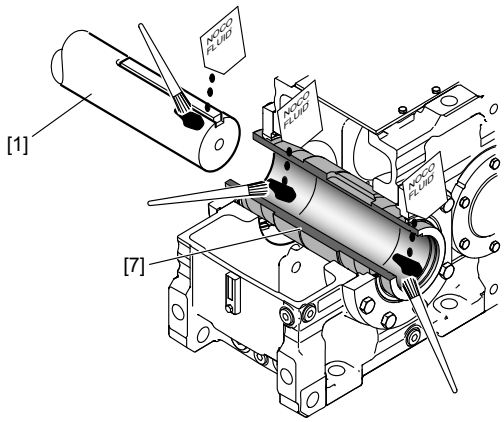

18014398819829899

[1] Machine shaft [7] Hollow shaft

2. Attach the inner retaining ring [8] to the hollow shaft [7]. Secure the end plate [4] using the outer retaining ring [9]. Thread the threaded rod [2] into the machine shaft [1]. Observe the tightening torques in chapter "Thread size/tightening torques" (page 108).
   - **INFORMATION** Applying lubricant to the threaded rod and nut prior to assembly makes the job easier.

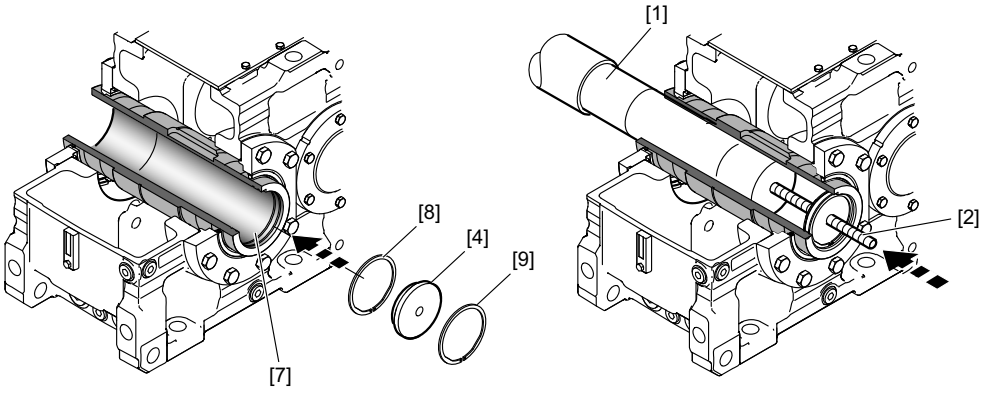

2888325003

[1] Machine shaft
[2] Threaded rod
[4] End plate
[7] Hollow shaft
[8] Retaining ring, inside
[9] Outer retaining ring

3. Tighten the machine shaft [1] with the nut [5] until the shaft end of the machine shaft [1] and the end plate [4] meet.

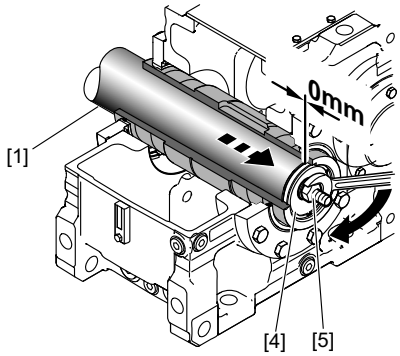

2879305611

[1] Machine shaft
[4] End plate
[5] Nut

4. Loosen the nut [5]. Screw the threaded rod [2] out.

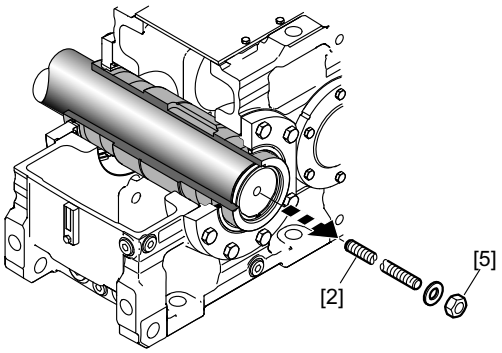

2887985163

[2] Threaded rod
[5] Nut

5. Secure the machine shaft [1] using the retaining screw [6]. The retaining screw should also be locked with a suitable threadlocker. Observe the tightening torques in chapter "Thread size/tightening torques" (page 108).

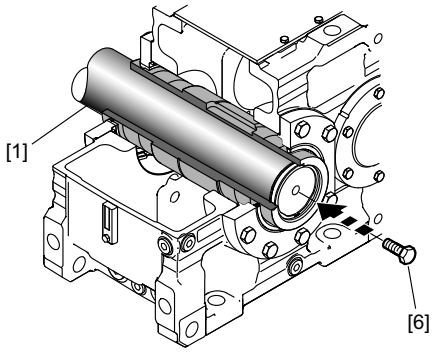

2879305611

[1] Machine shaft
[6] Retaining screw



NOTICE

Improper assembly of the protection cover may result in risk of injury due to rotating parts. Dust and dirt may damage the sealing system of the gear unit.

Risk of injury to persons and damage to property.

- Be sure to properly attach the protection cover after completing assembly (dust proof).

Sizes X170-320

INFORMATION

- Included in the delivery:
  - Retaining screws [3] and end plate [4]
- **Not** included in the delivery:
  - Threaded rod [2], nut [5], retaining screw [6], ejector screw [8]

1. Apply NOCO® fluid to the hollow shaft [7] and the shaft end of the machine shaft [1].

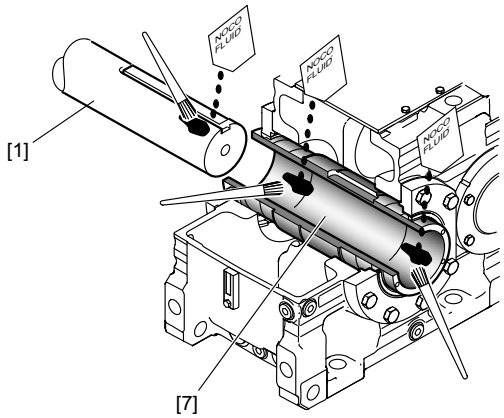

9007202133994251

[1] Machine shaft
[7] Hollow shaft

2. Use the retaining screws [3] to attach the end plate [4] centrically to the hollow shaft [7] and screw the threaded rod [2] onto the machine shaft [1]. Observe the tightening torques in chapter "Thread size/tightening torques" (page 108).
   - **INFORMATION** Applying lubricant to the threaded rod and nut prior to assembly makes the job easier.

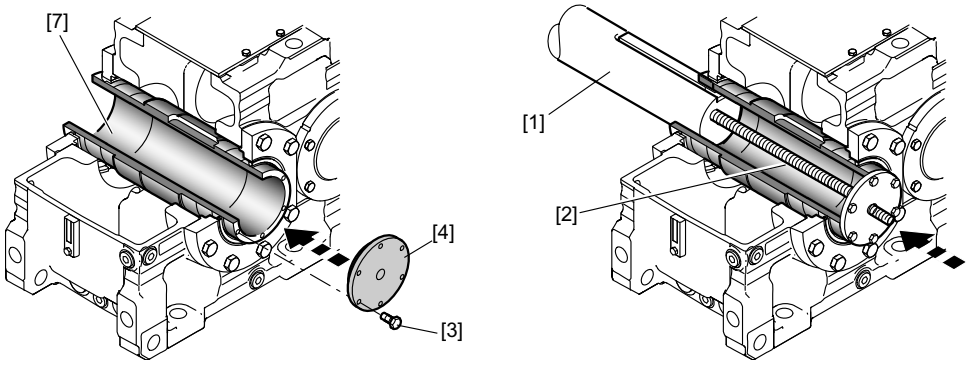

310352011

[1] Machine shaft
[2] Threaded rod
[3] Retaining screws
[4] End plate
[7] Hollow shaft

3. Tighten the machine shaft [1] with the nut [5] until the shaft end of the machine shaft [1] and the end plate [4] meet.

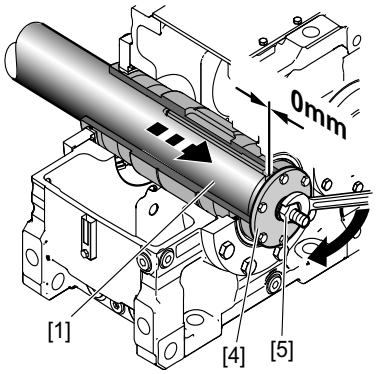

310407307

[1] Machine shaft
[4] End plate
[5] Nut

4. Loosen the nut [5]. Screw the threaded rod [2] out.

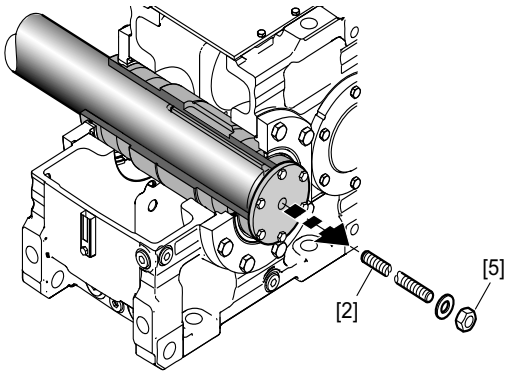

310655244

[2] Threaded rod
[5] Nut

5. Secure the machine shaft [1] using the retaining screw [6]. The retaining screw should also be locked with a suitable threadlocker. Observe the tightening torques in chapter "Thread size/tightening torques" (page 108).

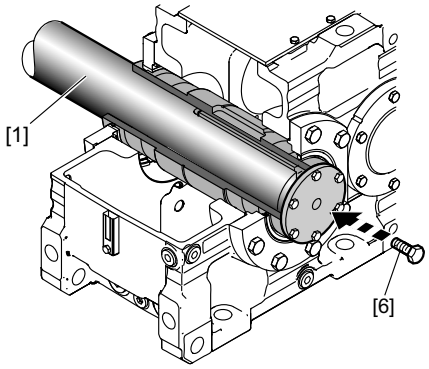

[1] Machine shaft
[6] Retaining screw



NOTICE

Improper assembly of the protection cover may result in risk of injury due to rotating parts. Dust and dirt may damage the sealing system of the gear unit.

Risk of injury to persons and damage to property.

- Be sure to properly attach the protection cover after completing assembly (dust proof).

5.11.5 Disassembling the gear unit from the machine shaft

NOTICE

Improper disassembly may damage bearings and other components.

Possible damage to property.

- You may only use the hollow shaft as a support for disassembly. Note that supporting on any other parts of the gear unit may damage the material.

Sizes X100-160

1. Loosen the retaining screw [6]. Remove the outer circlip [8] and the end plate [4].

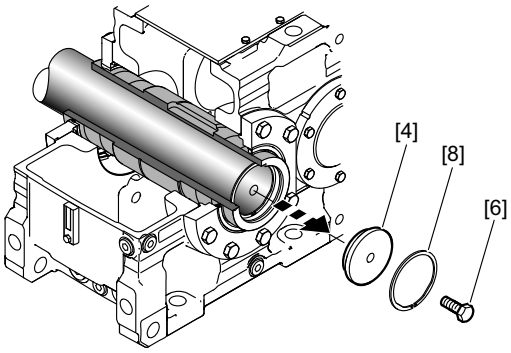

2851177867

[4] End plate
[6] Retaining screw
[8] Retaining ring

2. To protect the center bore, screw the retaining screw [6] into the machine shaft [1].

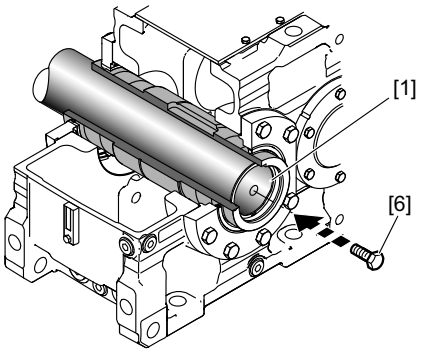

2851180299

[1] Machine shaft
[6] Retaining screw

3. Turn the end plate [4] and remount it with the outer retaining ring [8].

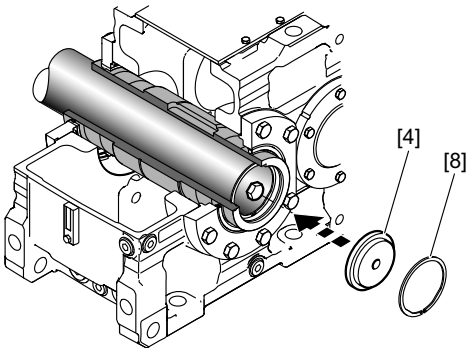

2851183627

[4] End plate
[8] Retaining ring

4. Thread the ejector screw [8] into the end plate [4] to remove the gear unit from the machine shaft [1].
   - **INFORMATION** Applying lubricant to the ejector screw [8] and the thread in the end plate prior [4] to disassembly makes the job easier.

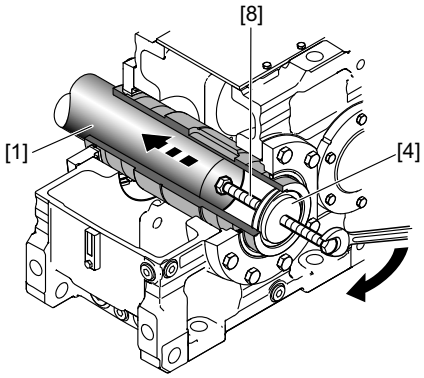

2851187595

[1] Machine shaft
[4] End plate
[8] Ejector screw

Sizes X170-320

1. Loosen the retaining screw [6].

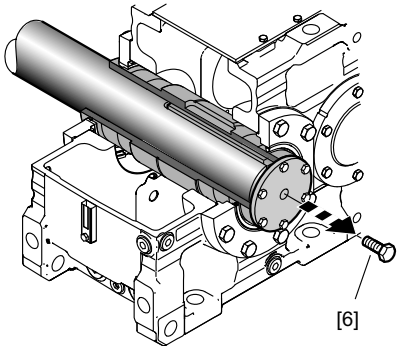

310460043

[6] Retaining screw

2. Remove the retaining screws [3] and the end plate [4].

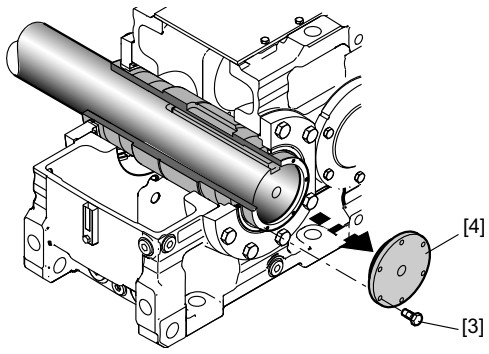

310464523

[3] Retaining screw
[4] End plate

3. To protect the center bore, screw the retaining screw [6] into the machine shaft [1].

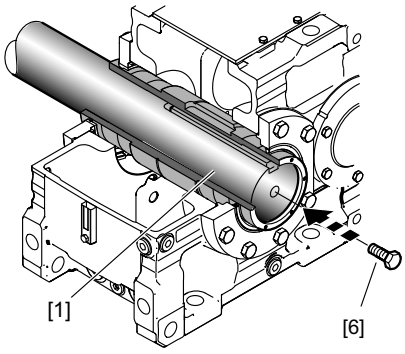

310470027

[1] Machine shaft
[6] Retaining screw

4. To disassemble the gear unit, flip the end plate [4] over and use the retaining screws [3] to reattach it centrically to the hollow shaft [7]. The retaining screws [3] should be tightened hand-tight.

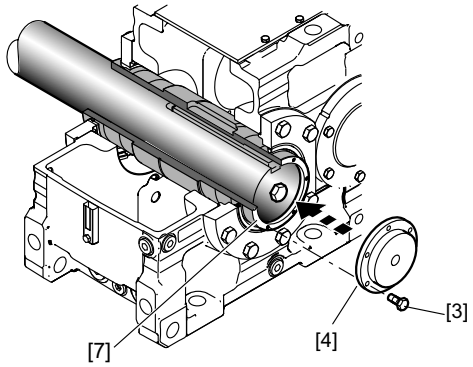

310474123

[4] End plate
[3] Retaining screw
[7] Hollow shaft

5. Thread the ejector screw [8] into the end plate [4] to remove the gear unit from the machine shaft [1].

   INFORMATION Applying lubricant to the ejector screw [8] and the thread in the end plate prior [4] to disassembly makes the job easier.

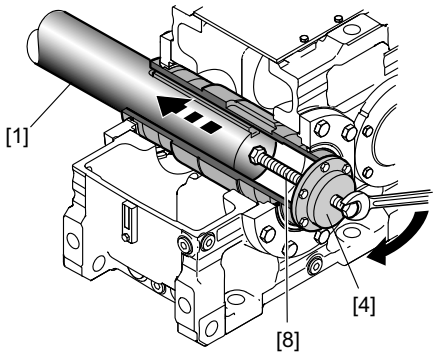

310478219

[1] Machine shaft
[4] End plate
[8] Ejector screw

5.12 Output shaft as a hollow shaft with shrink disk /..H

5.12.1 General information

The material of the machine shaft should be dimensioned by the customer according to the loads that will occur. The shaft material should have a yield point of at least 320 N/mm².

5.12.2 Thread sizes/tightening torques

SEW-EURODRIVE recommends the following thread sizes and tightening torques:

Size	Recommended thread size		Tightening torque [Nm] Retaining screw [6][1)] Strength class 8.8
	Ejector screw [8][1)] (threads in the end plate)	• Threaded rod [2][1)] • Nut (DIN 934) [5][1)] • Retaining screw [6][1)] strength class 8.8	
X..H100-150	M30	M24	798
X..H160-230	M36	M30	1597
X..H240-300	M42	M36	2778
X..H310-320	M48	M42	3995

1) see subsequent pages

Size	Thread size for 6 x retaining screws [3][1)] Strength class 10.9	Tightening torque [Nm]		2 x retaining rings (bore) DIN 472
		Assembly/operating state [Nm]	Disassembly [Nm]	
X..H100	-	-	-	80x2.5
X..H110	-	-	-	90x2.5
X..H120	-	-	-	100x3
X..H130	-	-	-	110x4
X..H140	-	-	-	120x4
X..H150	-	-	-	130x4
X..H160	-	-	-	140x4
X..H170-190	M10x30	48	Apply hand pressure	-
X..H200-230	M12x30	86	Apply hand pressure	-
X..H240-300	M16x40	210	Apply hand pressure	-
X..H310-320	M20x50	410	Apply hand pressure	-

1) see subsequent pages

5.12.3 Dimensions of the machine shaft

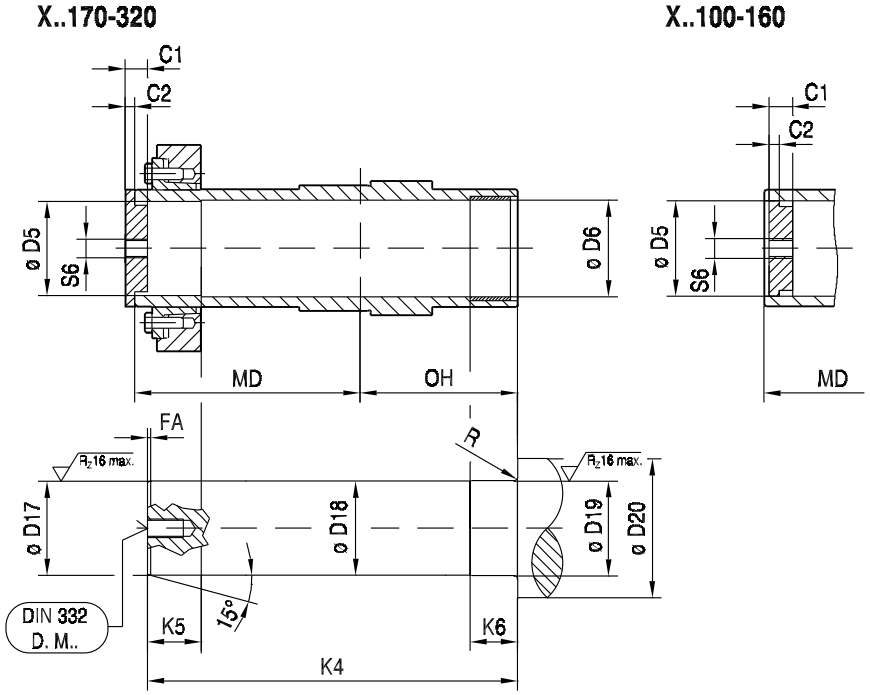

9007199906389771

X.F.. X.K.. X.T..	C1	C2	ø D5	ø D6	ø D17	ø D18	ø D19	ø D20	FA	K4	K5	K6	MD	OH	R	S6	DIN 332 D.M..
X..H100	30	14	80^{H7}	81^{H9}	80_{h6}	80_{h11}	81_{m6}	95	2	394.5_{-1}	46	42_{-1}	261	173	3	M30	M24
X..H110	30	14	90^{H7}	91^{H9}	90_{h6}	90_{h11}	91_{m6}	105	2	400.5_{-1}	46	42_{-1}	265	176	3	M30	M24
X..H120	30	14	100^{H7}	101^{H9}	100_{h6}	100_{h11}	101_{m6}	115	2	437_{-1}	51	52_{-1}	286.5	190.5	3	M30	M24
X..H130	30	14	110^{H7}	111^{H9}	110_{h6}	110_{h11}	111_{m6}	125	2	449_{-1}	55	52_{-1}	297	194	3	M30	M24
X..H140	30	14	120^{H7}	121^{H9}	120_{h6}	120_{h11}	121_{m6}	135	2	509_{-1}	59	62_{-1}	329	222	3	M30	M24
X..H150	30	14	130^{H7}	131^{H9}	130_{h6}	130_{h11}	131_{m6}	145	3	520_{-1}	66	62_{-1}	337.5	224.5	3	M30	M24
X..H160	36	16	140^{H7}	141^{H9}	140_{h6}	140_{h11}	141_{m6}	155	3	583_{-1}	66	73_{-1}	375	256	4	M36	M30
X..H170	36	17	150^{H7}	151^{H9}	150_{h6}	150_{h11}	151_{m6}	165	3	600_{-1}	83	73_{-1}	364	256	4	M36	M30
X..H180	36	17	165^{H7}	166^{H9}	165_{g6}	165_{h11}	166_{m6}	180	3	672_{-1}	83	83_{-1}	400	292	4	M36	M30
X..H190	36	17	165^{H7}	166^{H9}	165_{g6}	165_{h11}	166_{m6}	180	3	672_{-1}	83	83_{-1}	400	292	4	M36	M30
X..H200	36	17	180^{H7}	181^{H9}	180_{g6}	180_{h11}	181_{m6}	195	3	750_{-1}	101	83_{-1}	450.5	319.5	4	M36	M30
X..H210	36	17	190^{H7}	191^{H9}	190_{g6}	190_{h11}	191_{m6}	205	3	753_{-1}	106	83_{-1}	453.5	319.5	4	M36	M30
X..H220	36	17	210^{H7}	211^{H9}	210_{g6}	210_{h11}	211_{m6}	230	3	830_{-1}	118	108_{-1}	497.5	352.5	5	M36	M30
X2KH220	36	17	210^{H7}	211^{H9}	210_{g6}	210_{h11}	211_{m6}	230	3	900_{-1}	118	108_{-1}	532.5	387.5	5	M36	M30
X..H230	36	17	210^{H7}	211^{H9}	210_{g6}	210_{h11}	211_{m6}	230	3	830_{-1}	118	108_{-1}	497.5	352.5	5	M36	M30
X2KH230	36	17	210^{H7}	211^{H9}	210_{g6}	210_{h11}	211_{m6}	230	3	900_{-1}	118	108_{-1}	532.5	387.5	5	M36	M30
X..H240	45	22	230^{H7}	231^{H9}	230_{g6}	230_{h11}	231_{m6}	250	3	948_{-1}	140	108_{-1}	571.5	400.5	5	M42	M36
X2KH240	45	22	230^{H7}	231^{H9}	230_{g6}	230_{h11}	231_{m6}	250	3	1023_{-1}	140	108_{-1}	609	438	5	M42	M36
X..H250	45	22	240^{H7}	241^{H9}	240_{g6}	240_{h11}	241_{m6}	260	3	948_{-1}	140	108_{-1}	571.5	400.5	5	M42	M36
X2KH250	45	22	240^{H7}	241^{H9}	240_{g6}	240_{h11}	241_{m6}	260	3	1023_{-1}	140	108_{-1}	609	438	5	M42	M36
X..H260	45	22	250^{H7}	255^{H9}	250_{g6}	250_{h11}	255_{m6}	280	4	1021_{-1}	140	108_{-1}	608	437	5	M42	M36
X..H270	45	22	280^{H7}	285^{H9}	280_{g6}	280_{h11}	285_{m6}	310	4	1056_{-1}	146	143_{-1}	630	450	5	M42	M36
X..H280	45	22	280^{H7}	285^{H9}	280_{g6}	280_{h11}	285_{m6}	310	4	1056_{-1}	146	143_{-1}	630	450	5	M42	M36
X..H290	45	22	300^{H7}	305^{H9}	300_{g6}	300_{h11}	305_{m6}	330	4	1147_{-1}	152	143_{-1}	679	492	5	M42	M36
X..H300	45	22	300^{H7}	305^{H9}	300_{g6}	300_{h11}	305_{m6}	330	4	1147_{-1}	152	143_{-1}	679	492	5	M42	M36
X..H310	55	28	320^{H7}	325^{H9}	320_{g6}	320_{h11}	325_{m6}	350	4	1241_{-1}	165	143_{-1}	740.5	528.5	5	M42	M36
X..H320	55	28	320^{H7}	325^{H9}	320_{g6}	320_{h11}	325_{m6}	350	4	1241_{-1}	165	143_{-1}	740.5	528.5	5	M42	M36

5.12.4 Mounting the gear unit onto the machine shaft

INFORMATION

- Make sure the dimensions of the machine shaft correspond to SEW specifications → see previous page.
- Observe the manufacturer's shrink disk documentation.

Sizes X100-160

INFORMATION

- Included in the delivery:
  - 2 x retaining rings [8]/[9] and end plate [4].
- **Not** included in the delivery:
  - Threaded rod [2], nut [5], retaining screw [6], ejector screw [8].

1. Before assembling the gear unit, degrease the hollow shaft [7] and the machine shaft [1] and apply some NOCO® fluid to the machine shaft [1] in the bushing area [11].
   - ⚠**NOTICE** Never apply NOCO® fluid directly to the bushing [11] since the compound may get into the clamping area of the shrink disk when the input shaft is connected.

     Possible damage to property.

     – The clamping area of the shrink disk between the machine shaft [1] and the hollow shaft [7] must remain absolutely free of any grease.

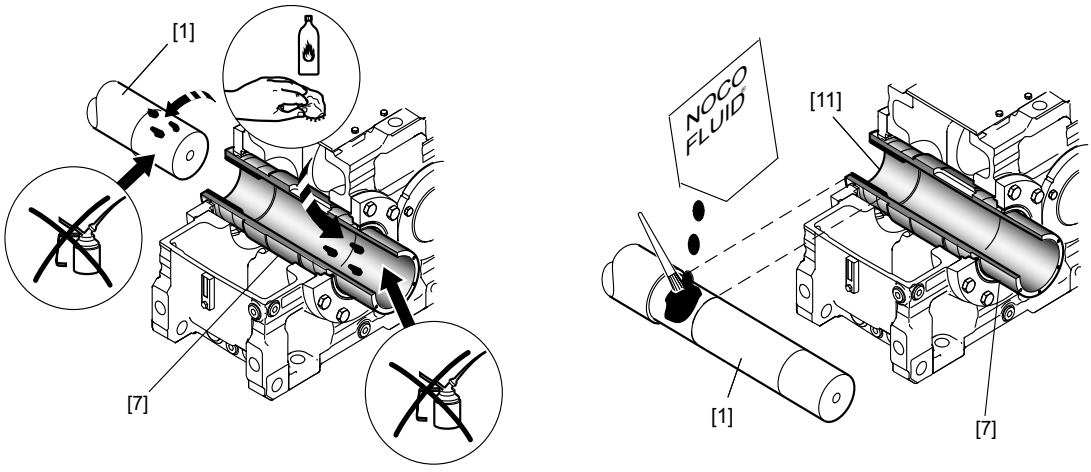

9007199565225355

[1] Machine shaft
[7] Hollow shaft
[11] Bushing

2. Attach the inner retaining ring [8] to the hollow shaft [7]. Secure the end plate [4] using the outer retaining ring [9]. Thread the threaded rod [2] into the machine shaft [1]. Observe the tightening torques in chapter "Thread size/tightening torques" (page 121).
   - **INFORMATION** Applying lubricant to the threaded rod and nut prior to assembly makes the job easier.

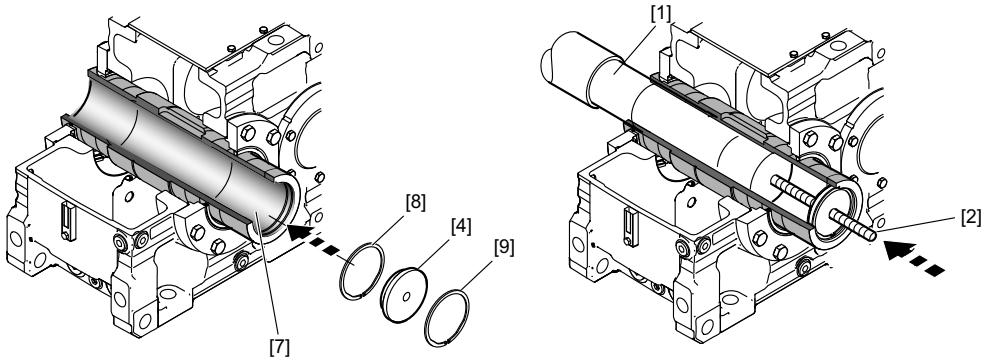

2879298827

[1] Machine shaft
[2] Threaded rod
[4] End plate
[7] Hollow shaft
[8] Retaining ring, inside
[9] Outer retaining ring

3. Tighten the machine shaft [1] with the nut [5] until the shaft end of the machine shaft [1] and the end plate [4] meet.

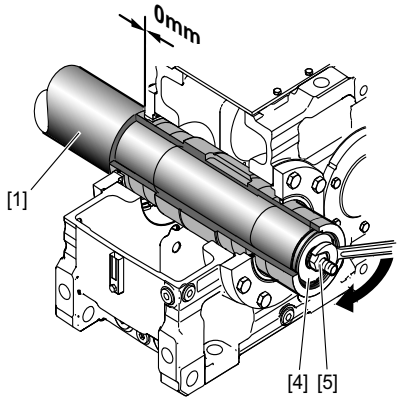

2888427147

[1] Machine shaft
[4] End plate
[5] Nut

4. Loosen the nut [5]. Screw the threaded rod [2] out.

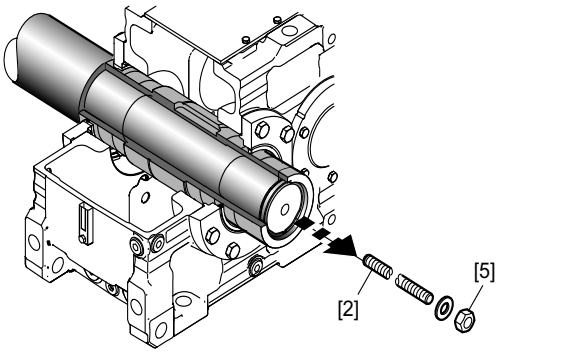

2879303435

[2] Threaded rod
[5] Nut

5. Secure the machine shaft [1] using the retaining screw [6]. The retaining screw should also be locked with a suitable threadlocker. Observe the tightening torques in chapter "Thread size/tightening torques" (page 121).

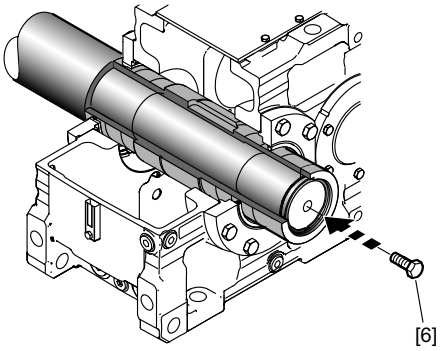

2888331147

[1] Machine shaft
[6] Retaining screw

6. Slide the shrink disk [9] with untightened screws onto the hollow shaft [7] and position the inner ring of the shrink disk [9b] with measurement A.
   - ⚠**CAUTION** The loose shrink disk could slip.

     Potential risk of crushing due to falling parts.

     – Secure the shrink disk against slipping.

   - ⚠**NOTICE** Tightening the locking screws without first installing a shaft may result in the hollow shaft being deformed.

     Possible damage to property.

     – Never tighten the screws without the shaft installed.

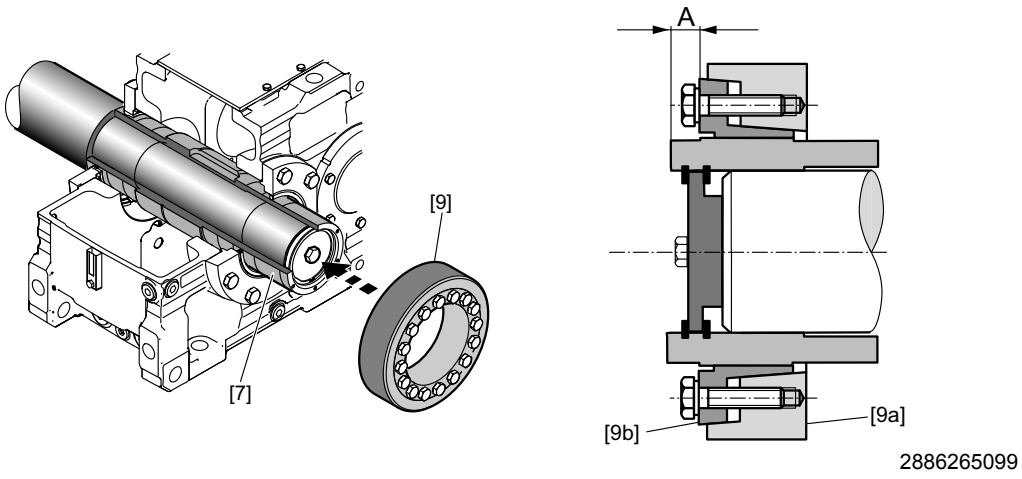

[7] Hollow shaft
[9] Shrink disk
[9a] Bevel (outer ring)
[9b] Taper bushing (inner ring)

Size	A [mm]
XH100	37.5
XH110	38
XH120	39
XH130-140	41
XH150	42
XH160	48

7. Tighten the locking screws [10] hand-tight. In doing so, align the bevel (outer ring) [9a] parallel to the taper bushing (inner ring) [9b] of the shrink disk. Successively tighten the locking screws [10] in a clockwise direction (not in a diametrically opposite sequence), each with a quarter turn. Do not tighten the locking screws [10] in a diametrically opposite sequence.
   - **INFORMATION** For shrink disks with a slotted taper bushing (inner ring) [9b], tighten the locking screws [10] to the left and right of the slot one after another. Then tighten the remaining screws at evenly spaced intervals in several stages.

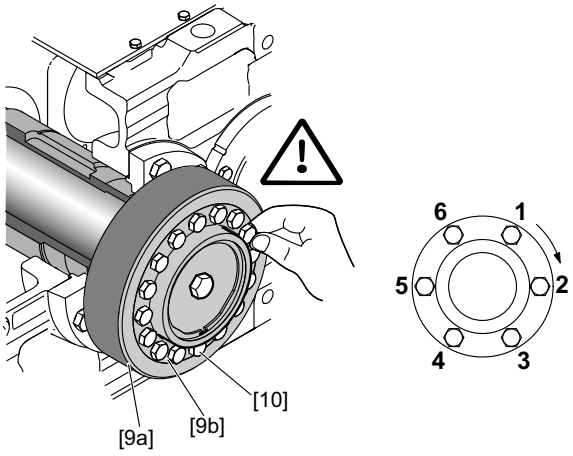

2886267275

[9a] Bevel (outer ring)
[9b] Taper bushing (inner ring)
[10] Locking screws

8. Work around the ring in several stages, evenly tighten the locking screws [10] by ¼ turns until the bevel (outer ring) [9a] and the taper bushing (inner ring) [9b] align on the face that holds the screws as is shown in the illustration below.

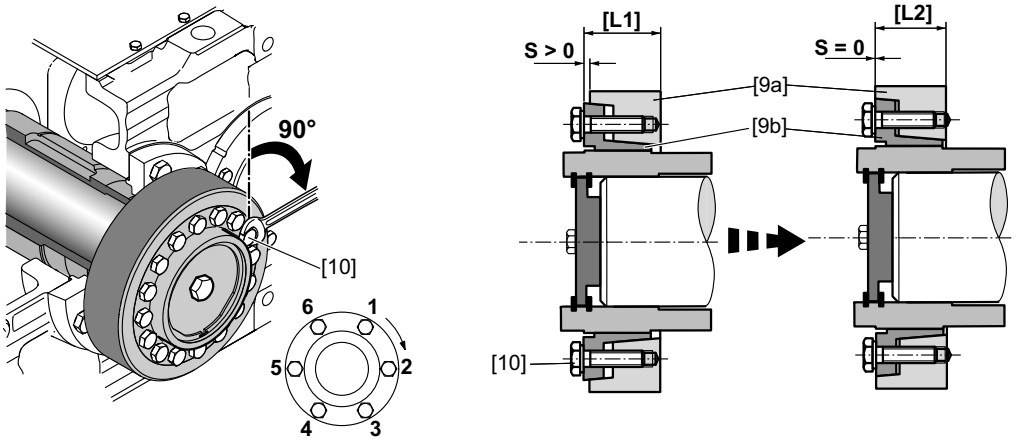

2886269451

[9a] Bevel (outer ring)
[9b] Taper bushing (inner ring)
[10] Locking screws
[L1] Condition at the time of shipment (pre-assembled)
[L2] Completely assembled (ready for operation)

INFORMATION

If the taper (outer ring) and the taper bushing (inner ring) cannot be aligned on the face that holds the screws, disassemble the shrink disk again and carefully clean/lubricate it as shown in the next chapter.

NOTICE

Improper assembly of the protection cover may result in risk of injury due to rotating parts. Dust and dirt may damage the sealing system of the gear unit.

Risk of injury to persons and damage to property.

- Be sure to properly attach the protection cover after completing assembly (dust proof).

Sizes X170-320

INFORMATION

- Included in the delivery:
  - Retaining screws [3] and end plate [4].
- **Not** included in the delivery:
  - Threaded rod [2], nut [5], retaining screw [6], ejector screw [8].

1. Before assembling the gear unit, degrease the hollow shaft [7] and the machine shaft [1] and apply some NOCO® fluid to the machine shaft [1] in the bushing area [11].
   - **NOTICE** Never apply NOCO® fluid directly to the bushing [11] since the compound may get into the clamping area of the shrink disk when the input shaft is connected.

     Possible damage to property.

     – The clamping area of the shrink disk between the machine shaft [1] and the hollow shaft [7] must remain absolutely free of any grease.

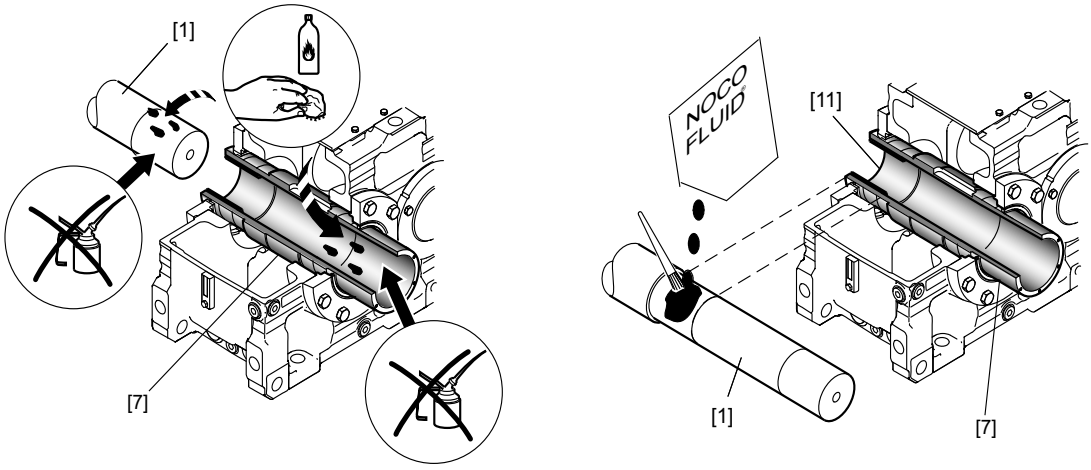

9007199565225355

[1] Machine shaft
[7] Hollow shaft
[11] Bushing

2. Use the retaining screws [3] to attach the end plate [4] centrically on the hollow shaft [7]. Thread the threaded rod [2] into the machine shaft [1]. Observe the tightening torques in chapter "Thread sizes/tightening torques" (page 121).

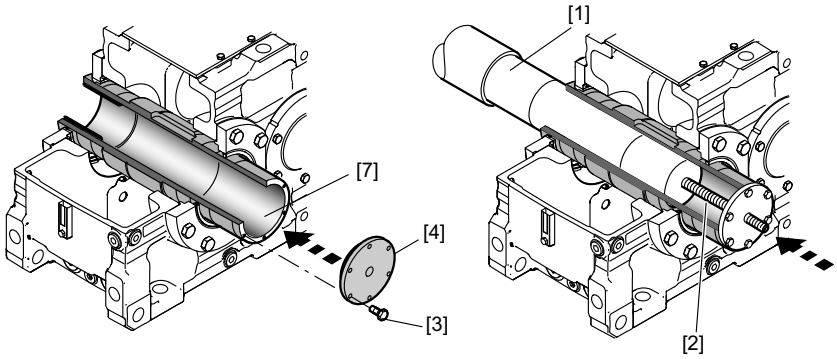

356508428

[1] Machine shaft
[2] Threaded rod
[3] Retaining screws
[4] End plate
[7] Hollow shaft

3. Tighten the machine shaft [1] with the nut [5] until the shoulders of the machine shaft and the hollow shaft [7] meet.

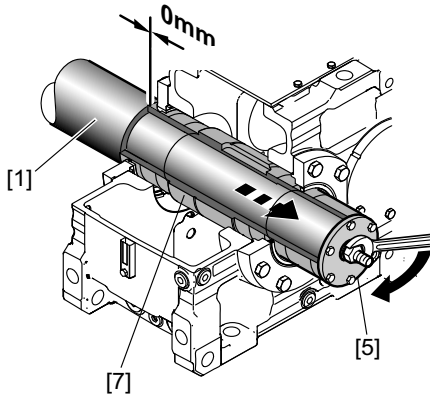

310501387

[1] Machine shaft
[5] Nut
[7] Hollow shaft

4. Loosen the nut [5]. Screw the threaded rod [2] out.

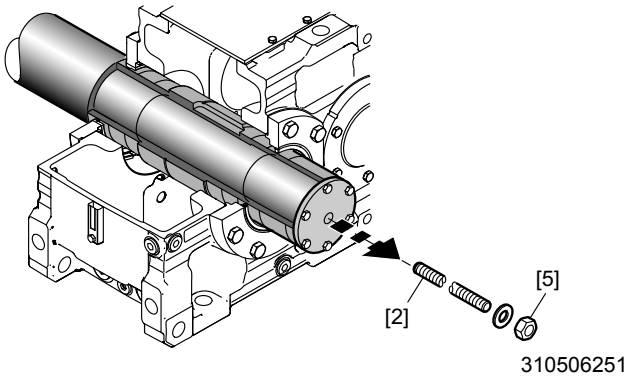

[2] Threaded rod [5] Nut

5. Secure the machine shaft [1] using the retaining screw [6]. The retaining screw should also be locked with a suitable threadlocker. Observe the tightening torques in chapter "Thread sizes/tightening torques" (page 121).

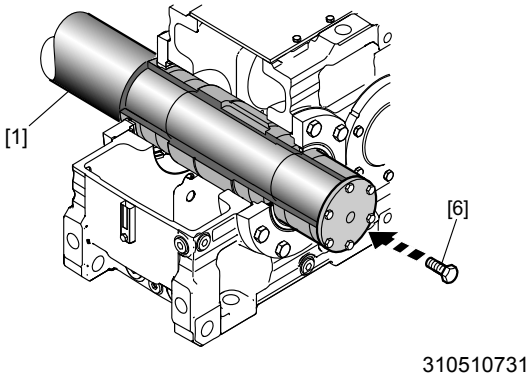

[1] Machine shaft
[6] Retaining screw

6. Slide the shrink disk [9] with untightened screws onto the hollow shaft [7] and position the inner ring of the shrink disk [9b] with measurement A.
   - ⚠**CAUTION** The loose shrink disk could slip.

     Risk of injury to persons and damage to property.

     – Secure the shrink disk against slipping.

   - ⚠**NOTICE** Tightening the locking screws without first installing a shaft may result in the hollow shaft being deformed.

     Possible damage to property.

     – Never tighten the screws without the shaft installed.

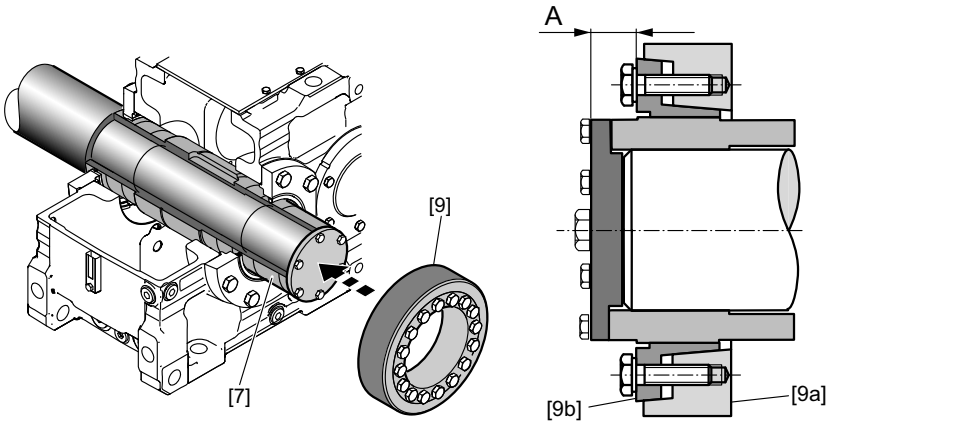

9007199565261323

[7] Hollow shaft
[9] Shrink disk
[9a] Bevel (outer ring)
[9b] Taper bushing (inner ring)

Size	A [mm]
XH170-190	37
XH200-210	38
XH220-230	39
XH240-260	48
XH270-300	49
XH310-320	60

7. Tighten the locking screws [10] hand-tight. In doing so align the bevel (outer ring) [9a] parallel to the taper bushing (inner ring) [9b] of the shrink disk. Successively tighten the locking screws [10] in a clockwise direction (not in a diametrically opposite sequence), each with a quarter turn. Do not tighten the locking screws [10] in a diametrically opposite sequence.
   - **INFORMATION** For shrink disks with a slotted taper bushing (inner ring) [9b], tighten the locking screws [10] left and right of the slot one after another. Then tighten the remaining screws at evenly spaced intervals in several stages.

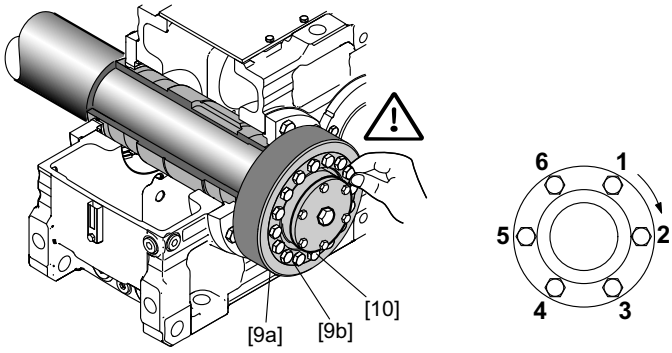

[9a] Bevel (outer ring)
[9b] Taper bushing (inner ring)
[10] Locking screws

8. Work around the ring in several stages, evenly tighten the locking screws [10] by ¼ turns until the bevel (outer ring) [9a] and the taper bushing (inner ring) [9b] align on the face that holds the screws as is shown in the illustration below.

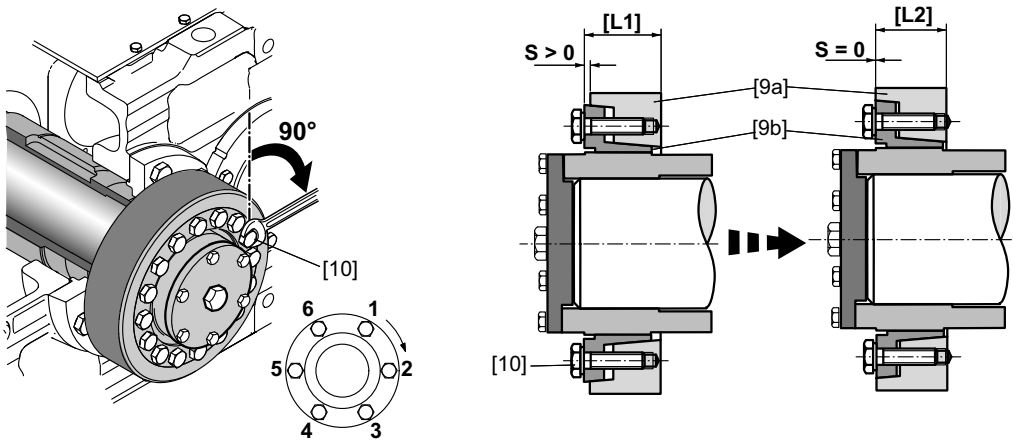

[9a] Bevel (outer ring)
[9b] Taper bushing (inner ring)
[10] Locking screws
[L1] Condition at the time of shipment (pre-assembled)
[L2] Completely assembled (ready for operation)

INFORMATION

If the taper (outer ring) and the taper bushing (inner ring) cannot be aligned on the face that holds the screws, disassemble the shrink disk again and carefully clean/lubricate it as shown in the next chapter.

NOTICE

Improper assembly of the protection cover may result in risk of injury due to rotating parts. Dust and dirt may damage the sealing system of the gear unit.

Risk of injury to persons and damage to property.

- Be sure to properly attach the protection cover after completing assembly (dust proof).

5.12.5 Disassembling the gear unit from the machine shaft

Sizes X100-160

NOTICE

Improper disassembly may damage bearings and other components.

Possible damage to property.

- You may only use the hollow shaft as a support for disassembly. Note that supporting on any other parts of the gear unit may damage the material.
- Remove the shrink disk properly. Never completely unscrew the retaining screws because the shrink disk might jump off and cause an injury.
- Shrink disks and corresponding parts of different gear units must not be swapped.

1. Loosen the locking screws [10] by a quarter turn one after the other to avoid straining the connecting surface.
   - **INFORMATION** If the bevel (outer ring) [9a] and the taper bushing (inner ring) [9b] do not separate by themselves:

     Take the necessary number of locking screws and screw them into the removal bores evenly. Tighten the locking screws in several steps until the tapered bushing separates from the bevel ring.

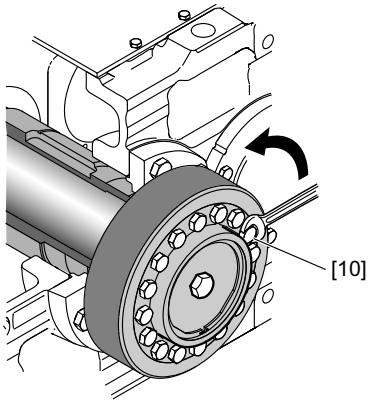

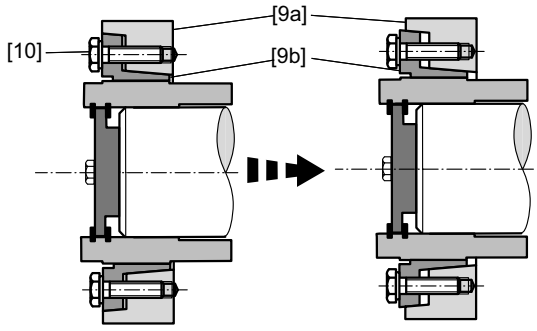

2886271627

[9a] Bevel (outer ring)
[9b] Taper bushing (inner ring)
[10] Locking screws

2. Remove the shrink disk from the hollow shaft. Disassemble the gear unit from the machine shaft as described in chapter "Disassembling the gear unit from the machine shaft" (page 116).

Sizes X170-320

NOTICE

Improper disassembly may damage bearings and other components.

Possible damage to property.

- You may only use the hollow shaft as a support for disassembly. Note that supporting on any other parts of the gear unit may damage the material.
- Remove the shrink disk correctly. Never completely unscrew the retaining screws because the shrink disk might jump off and cause an accident.
- Shrink disks and corresponding parts of different gear units must not be swapped.

1. Loosen the locking screws [10] by a quarter turn one after the other to avoid straining the connecting surface.
   - **INFORMATION** If the bevel (outer ring) [9a] and the taper bushing (inner ring) [9b] do not separate by themselves:

     Take the necessary number of locking screws and screw them into the removal bores evenly. Tighten the locking screws in several steps until the tapered bushing separates from the bevel ring.

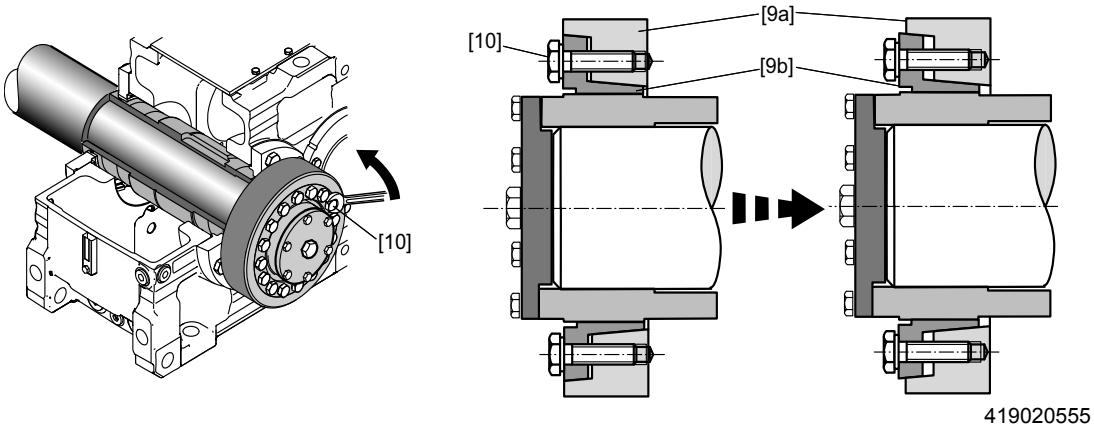

[9a] Bevel (outer ring)
[9b] Taper bushing (inner ring)
[10] Locking screws

2. Remove the shrink disk from the hollow shaft. Disassemble the gear unit from the machine shaft as described in chapter "Disassembling the gear unit from the machine shaft" (page 118).

Cleaning and lubricating the shrink disk

Clean and lubricate the shrink disk before installing it again.

INFORMATION

- You must perform the following steps carefully to ensure proper functioning of the shrink disk. Use only products that are comparable to the specified lubricant.
- If the tapered surfaces of the shrink disk are damaged, the shrink disk can no longer be used and must be replaced.

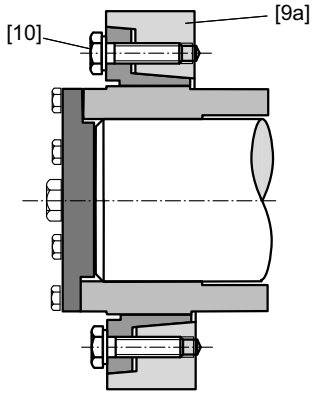

1526385163

[9a] Bevel (outer ring)
[10] Locking screws

1. Thoroughly clean the shrink disk from dirt and any remaining lubricants after disassembly.
2. Apply an MoS_2 compound onto the threads and under the screw heads of the locking screws [10], for example "gleitmo 100" by FUCHS LUBRITECH (www.fuchs-lubritech.com).
3. Also evenly lubricate the tapered surface of the taper (outer ring) [9a] with a thin layer of an MoS_2 compound, for example "gleitmo 100" from FUCHS LUBRITECH (www.fuchs-lubritech.com).

5.13 Output shaft as a splined hollow shaft /..V

5.13.1 General information

The material of the machine shaft should be dimensioned by the customer according to the loads that will occur. The shaft material should have a yield point of at least 320 N/mm².

5.13.2 Thread sizes/tightening torques

SEW-EURODRIVE recommends the following thread sizes and tightening torques:

Size	Recommended thread size		Tightening torque [Nm] Retaining screw [6][1] Strength class 8.8
	Ejector screw [8][1] (threads in the end plate)	• Threaded rod [2][1] • Nut (DIN 934) [5][1] • Retaining screw [6] strength class 8.8	
X..V100-150	M30	M24	798
X..V160-230	M36	M30	1597
X..V240-300	M42	M36	2778
X..V310-320	M48	M42	3995

1) see subsequent pages

Size	Thread size for 6 x retaining screws [3][1] Strength class 10.9	Tightening torque		2 x retaining rings (bore) DIN 472
		Assembly/operating state [Nm]	Disassembly [Nm]	
X..V100	-	-	-	80x2.5
X..V110	-	-	-	90x2.5
X..V120	-	-	-	100x3
X..V130	-	-	-	110x4
X..V140	-	-	-	125x4
X..V150	-	-	-	130x4
X..V160	-	-	-	140x4
X..V170-190	M10x30	48	Apply hand pressure	-
X..V200-230	M12x30	86	Apply hand pressure	-
X..V240-300	M16x40	210	Apply hand pressure	-
X..V310-320	M20x50	410	Apply hand pressure	-

1) see subsequent pages

5.13.3 Dimensions of the machine shaft

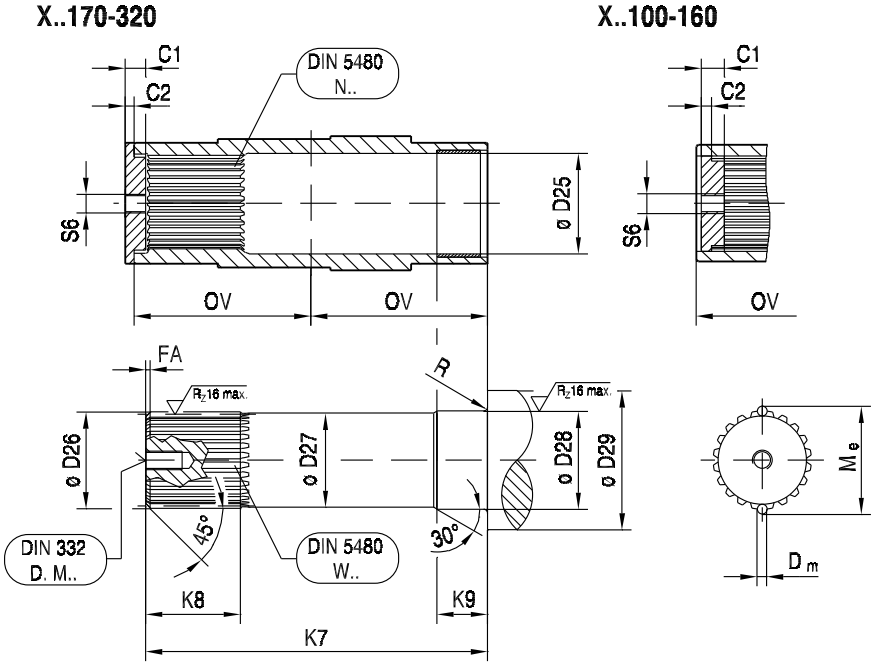

9007200017836427

X.F.. X.K.. X.T..	C1	C2	ø D25	ø D26	ø D27	ø D28	ø D29	D_m	FA	K7	K8	K9	M_e	OV	R	S6	DIN 332 D.M..	DIN 5480
X..100	30	14	81^{H9}	74.4_{h10}	73	81_{m6}	95	6	3	306_{-1}	81	42_{-1}	$81.326^{-0.069}_{-0.125}$	173	3	M24	M20	W 75x3x30x24x8f N 75x3x30x24x9H
X..110	30	14	91^{H9}	84.4_{h10}	83	91_{m6}	105	6	3	311.5_{-1}	81	42_{-1}	$91.092^{-0.068}_{-0.123}$	176	3	M24	M20	W 85x3x30x27x8f N 85x3x30x27x9H
X..120	30	14	101^{H9}	94.4_{h10}	93	101_{m6}	115	6	3	341_{-1}	91	52_{-1}	$101.141^{-0.068}_{-0.122}$	190.5	3	M30	M24	W 95x3x30x30x8f N 95x3x30x30x9H
X..130	30	14	111^{H9}	109.4_{h10}	108	111_{m6}	125	6	3	346_{-1}	86	52_{-1}	$116.076^{-0.078}_{-0.139}$	194	3	M30	M24	W 110x3x30x35x8f N 110x3x30x35x9H
X..V140	30	14	121^{H9}	119.4_{h10}	118	121_{m6}	135	6	3	402_{-1}	101	62_{-1}	$126.095^{-0.078}_{-0.138}$	222	3	M30	M24	W 120x3x30x38x8f N 120x3x30x38x9H
X..150	30	14	131^{H9}	129.4_{h10}	128	131_{m6}	145	6	3	407_{-1}	101	62_{-1}	$136.329^{-0.081}_{-0.144}$	224.5	3	M30	M24	W 130x3x30x42x8f N 130x3x30x42x9H
X..160	36	16	141^{H9}	139.4_{h10}	138	141_{m6}	155	6	3	464_{-1}	111	73_{-1}	$146.167^{-0.080}_{-0.143}$	256	4	M36	M30	W 140x3x30x45x8f N 140x3x30x45x9H
X..170	36	17	151^{H9}	149.4_{h10}	148	151_{m6}	165	6	3	492_{-1}	121	73_{-1}	$156.172^{-0.079}_{-0.141}$	256	4	M36	M30	W 150x3x30x48x8f N 150x3x30x48x9H
X..180	36	17	166^{H9}	159_{h10}	158	166_{m6}	180	10	5	564_{-1}	166	83_{-1}	$170.009^{-0.086}_{-0.152}$	292	4	M36	M30	W 160x5x30x30x8f N 160x5x30x30x9H
X..190	36	17	166^{H9}	159_{h10}	158	166_{m6}	180	10	5	564_{-1}	166	83_{-1}	$170.009^{-0.086}_{-0.152}$	292	4	M36	M30	W 160x5x30x30x8f N 160x5x30x30x9H
X..200	36	17	191^{H9}	179_{h10}	178	191_{m6}	205	10	5	619_{-1}	176	83_{-1}	$190.090^{-0.087}_{-0.155}$	319.5	4	M36	M30	W 180x5x30x34x8f N 180x5x30x34x9H
X..210	36	17	191^{H9}	179_{h10}	178	191_{m6}	205	10	5	619_{-1}	176	83_{-1}	$190.090^{-0.087}_{-0.155}$	319.5	4	M36	M30	W 180x5x30x34x8f N 180x5x30x34x9H
X..220	36	17	211^{H9}	199_{h10}	198	211_{m6}	230	10	5	685_{-1}	201	108_{-1}	$210.158^{-0.088}_{-0.157}$	352.5	5	M36	M30	W 200x5x30x38x8f N 200x5x30x38x9H
X2K220	36	17	211^{H9}	199_{h10}	198	211_{m6}	230	10	5	755_{-1}	201	108_{-1}	$210.158^{-0.088}_{-0.157}$	387.5	5	M36	M30	W 200x5x30x38x8f N 200x5x30x38x9H
X..230	36	17	211^{H9}	199_{h10}	198	211_{m6}	230	10	5	685_{-1}	201	108_{-1}	$210.158^{-0.088}_{-0.157}$	352.5	5	M36	M30	W 200x5x30x38x8f N 200x5x30x38x9H

X.F.. X.K.. X.T..	C1	C2	ø D25	ø D26	ø D27	ø D28	ø D29	D_m	FA	K7	K8	K9	M_e	OV	R	S6	DIN 332 D.M..	DIN 5480
X2K230	36	17	211^{H9}	199_{h10}	198	211_{m6}	230	10	5	755_{-1}	201	108_{-1}	$210.158^{-0.088}_{-0.157}$	387.5	5	M36	M30	W 200x5x30x38x8f N 200x5x30x38x9H
X..240	45	22	231^{H9}	219_{h10}	218	231_{m6}	250	10	5	777_{-1}	216	108_{-1}	$230.215^{-0.102}_{-0.179}$	400.5	5	M36	M30	W 220x5x30x42x8f N 220x5x30x42x9H
X2K240	45	22	231^{H9}	219_{h10}	218	231_{m6}	250	10	5	852_{-1}	216	108_{-1}	$230.215^{-0.102}_{-0.179}$	438	5	M36	M30	W 220x5x30x42x8f N 220x5x30x42x9H
X..250	45	22	241^{H9}	219_{h10}	218	241_{m6}	260	10	5	777_{-1}	216	108_{-1}	$230.215^{-0.102}_{-0.179}$	400.5	5	M36	M30	W 220x5x30x42x8f N 220x5x30x42x9H
X2K250	45	22	241^{H9}	219_{h10}	218	241_{m6}	260	10	5	852_{-1}	216	108_{-1}	$230.215^{-0.102}_{-0.179}$	438	5	M36	M30	W 220x5x30x42x8f N 220x5x30x42x9H
X..260	45	22	255^{H9}	239_{h10}	238	255_{m6}	275	10	5	850_{-1}	216	108_{-1}	$250.264^{-0.102}_{-0.180}$	437	5	M42	M36	W 240x5x30x46x8f N 240x5x30x46x9H
X..270	45	22	285^{H9}	258.4_{h10}	258	285_{m6}	305	16	8	876_{-1}	248	143_{-1}	$276.230^{-0.101}_{-0.177}$	450	5	M42	M36	W 260x8x30x31x8f N 260x8x30x31x9H
X..280	45	22	285^{H9}	258.4_{h10}	258	285_{m6}	305	16	8	876_{-1}	248	143_{-1}	$276.230^{-0.101}_{-0.177}$	450	5	M42	M36	W 260x8x30x31x8f N 260x8x30x31x9H
X..290	45	22	305^{H9}	278.4_{h10}	278	305_{m6}	325	16	8	960_{-1}	268	143_{-1}	$297.014^{-0.105}_{-0.184}$	492	5	M42	M36	W 280x8x30x34x8f N 280x8x30x34x9H
X..300	45	22	305^{H9}	278.4_{h10}	278	305_{m6}	325	16	8	960_{-1}	268	143_{-1}	$297.014^{-0.105}_{-0.184}$	492	5	M42	M36	W 280x8x30x34x8f N 280x8x30x34x9H
X..310	55	28	325^{H9}	298.4_{h10}	298	325_{m6}	345	16	8	1029_{-1}	318	143_{-1}	$316.655^{-0.102}_{-0.180}$	528.5	5	M42	M36	W 300x8x30x36x8f N 300x8x30x36x9H
X..320	55	28	325^{H9}	298.4_{h10}	298	325_{m6}	345	16	8	1029_{-1}	318	143_{-1}	$316.655^{-0.102}_{-0.180}$	528.5	5	M42	M36	W 300x8x30x36x8f N 300x8x30x36x9H

5.13.4 Mounting the gear unit onto the machine shaft

INFORMATION

Make sure the dimensions of the machine shaft correspond to SEW specifications → see previous page.

Sizes X100-160

INFORMATION

- Included in the delivery:
  - 2 x retaining rings [8]/[9] and end plate [4]
- **Not** included in the delivery:
  - Threaded rod [2], nut [5], retaining screw [6], ejector screw [8]

Apply some NOCO® fluid on the machine shaft around the bushing and the splining.

Mount the gear unit to the machine shaft as described in chapter "Mounting the gear unit to the machine shaft" (page 110).

Sizes X170-320

INFORMATION

- Included in the delivery:
  - Retaining screws [3] and end plate [4].
- **Not** included in the delivery:
  - Threaded rod [2], nut [5], retaining screw [6], ejector screw [8].

1. Apply some NOCO® fluid on the machine shaft [1] around the bushing [11] and the splining.

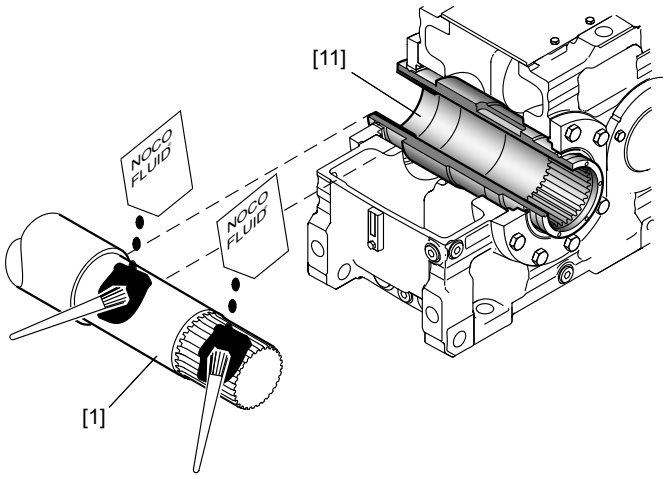

9007202116906123

[1] Machine shaft
[11] Bushing

2. Push the gear unit onto the machine shaft. The splining of the hollow shaft must mesh with the splining of the machine shaft.

   Use the retaining screws [3] to attach the end plate [4] centrically to the hollow shaft [7] and screw the threaded rod [2] onto the machine shaft [1]. Observe the tightening torques in chapter "Thread size/tightening torques" (page 137).

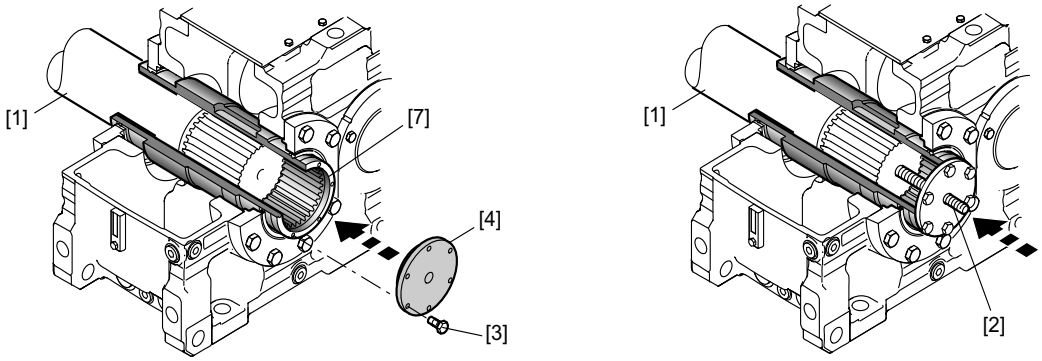

771692555

[1] Machine shaft
[2] Threaded rod
[3] Retaining screws
[4] End plate
[7] Hollow shaft

3. Tighten the machine shaft [1] with the nut [5] until the shoulders of the machine shaft and the hollow shaft [7] meet.

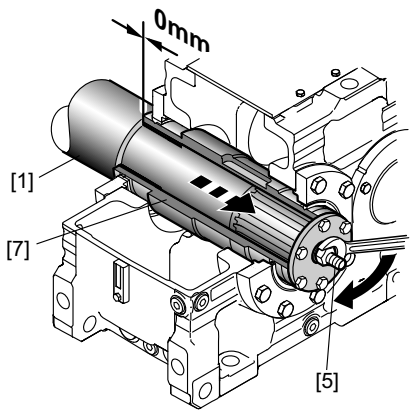

771696651

[1] Machine shaft
[5] Nut
[7] Hollow shaft

4. Loosen the nut [5]. Screw the threaded rod [2] out.

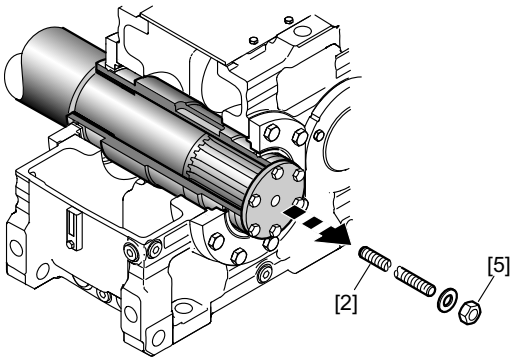

771752587

[2] Threaded rod
[5] Nut

5. Secure the machine shaft [1] using the retaining screw [6]. The retaining screw should also be locked with a suitable threadlocker. Observe the tightening torques in chapter "Thread size/tightening torques" (page 137).

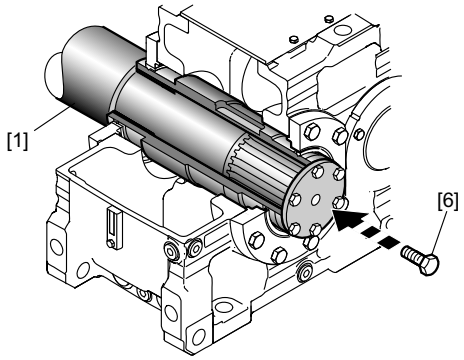

[1] Machine shaft
[6] Retaining screw

NOTICE

Improper assembly of the protection cover may result in risk of injury due to rotating parts. Dust and dirt may damage the sealing system of the gear unit.

Risk of injury to persons and damage to property.

- Be sure to properly attach the protection cover after completing assembly (dust proof).

5.13.5 Disassembling the gear unit from the machine shaft



NOTICE

Improper disassembly may damage bearings and other components.

Possible damage to property.

- You may only use the hollow shaft as a support for disassembly. Note that supporting on any other parts of the gear unit may damage the material.

Sizes X100-160

Disassemble the gear unit from the machine shaft as described in chapter "Disassembling the gear unit from the machine shaft" (page 116).

Sizes X170-320

Disassemble the gear unit from the machine shaft as described in chapter "Disassembling the gear unit from the machine shaft" (page 118).

5.14 Torque arm /T

⚠ WARNING

Insufficiently secured gear units can fall down during disassembly and assembly.

Severe or fatal injuries.

- Secure the gear unit during assembly and disassembly. Support the gear unit using appropriate tools.

NOTICE

Deforming the torque arm leads to constraining forces on the output shaft, which may negatively influence the service life of the output shaft bearings.

Possible damage to property.

- Do not deform the torque arm.

NOTICE

Strain on the torque arm might break the housing.

Possible damage to property.

- Adhere to the specified screw size, tightening torques and required screw strength.

1. To keep the flexural torque on the machine shaft as low as possible, the torque arm [1] must always be mounted on the same side as the machine that is driven. The torque arm [1] can be mounted on the top or bottom of the gear unit.

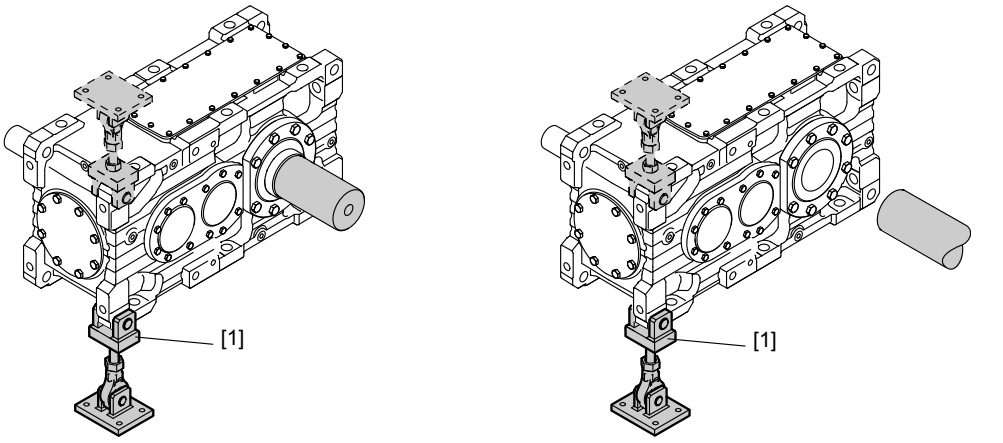

9007199613871883

2. Align the gear unit horizontally over the threaded bolts and the nuts of the torque arm.

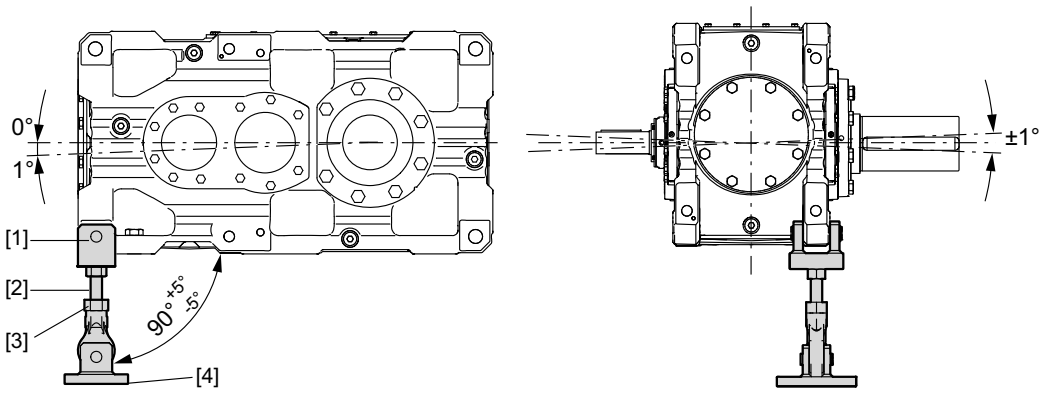

[1] Yoke with bolt
[2] Stud bolt with nuts
[3] Joint head
[4] Yoke plate with bolt

- ⚠**NOTICE** Make sure that the stud bolt [2] is screwed evenly into the yoke [1] and the joint head [3].

  Possible damage to property.

  – The stud bolt [2] must be screwed evenly into the yoke [1] and the joint head [3], covering a length of at least 1 x the bolt's cross section on both sides.

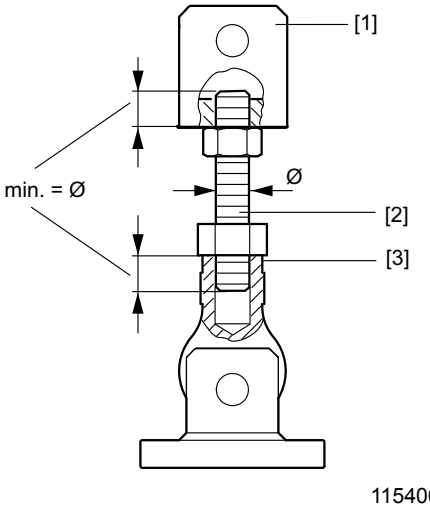

[1] Yoke with bolt
[2] Stud bolt with nuts
[3] Joint head

3. After the alignment process, tighten the nuts with the tightening torques listed in the following table. Secure it using a suitable threadlocker (e.g. Loctite® 243).

Size	Screw/nut	Tightening torque [Nm]
X100-110	M20	140
X120-130	M24	
X140-150	M24	
X160-190	M36	200
X200-230	M42	350
X240-280	M48	500
X290-320	M56	700

5.15 Mounting flange /F



⚠ WARNING

Insufficiently secured gear units can fall down during disassembly and assembly to the customer machine.

Severe or fatal injuries.

- Secure the gear unit during assembly and disassembly. Support the gear unit using appropriate tools.



NOTICE

Improper assembly or disassembly of the mounting flange may result in damage to the gear unit.

Possible damage to property.

- The mounting flange must only be disassembled or assembled under the instruction of the SEW customer service.



NOTICE

Improper installation and mounting may result in damage to the gear unit.

Possible damage to the gear unit.

- Gear units with mounting flange cannot be additionally secured on the floor with a rigid connection. Foot mounting of the gear unit or using a base frame are therefore not permitted.

Adhere to the following tightening torques when mounting the mounting flange to the operator's machine.

Screw/nut	Tightening torque Strength class 10.9 [Nm]
M12	137
M16	338
M20	661
M24	1136

INFORMATION

- The bolts must not be lubricated during assembly.
- Clean the threads of the bolts and apply a thread locking compound (e.g. Loctite® 243) to the first few threads.

5.16 Couplings

INFORMATION

Observe the operating instructions of the respective coupling manufacturer.

5.16.1 Mounting tolerances

Adjust the following misalignments according to the coupling manufacturer's specifications when mounting couplings.

a) Maximum and minimum clearance

b) Axial offset

c) Angular offset

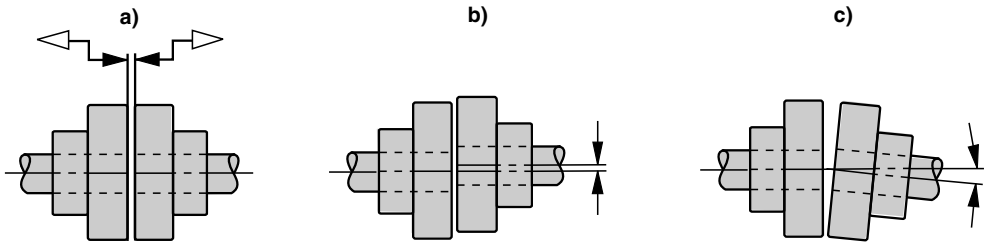

211395595

The following table shows various methods for measuring the differing tolerances.

Measuring instrument	Angular misalignment	Offset axis
Feeler gauge	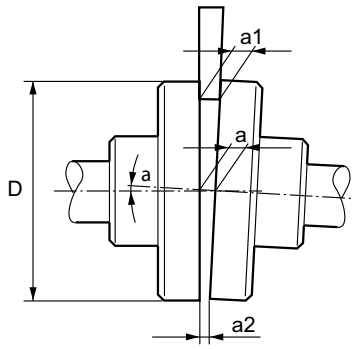 This method only achieves an accurate result when the deviation of the coupling faces is eliminated by turning both coupling halves by 180° and then calculating the average value from the difference (a1 – a2).	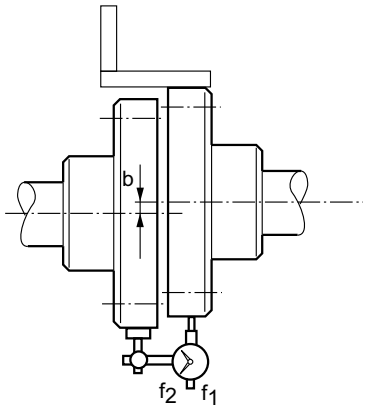 The following illustration shows the measurement of axial misalignment using a straight-edge. Permissible values for eccentricity are usually so small that the best measurement results can be achieved with a micrometer dial. If you rotate one coupling half together with the micrometer dial and divide the deviation by two, the deviation displayed on the micrometer dial indicates the misalignment (dimension "b") that includes the axial misalignment of the other coupling half.
Micrometer dial	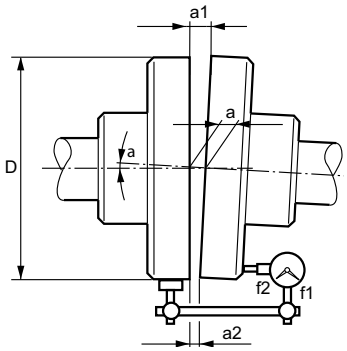 A prerequisite for this measuring method is that there is no axial play in the shaft bearings when the shafts rotate. If this condition is not fulfilled, the axial play between the faces of the coupling halves must be eliminated. As an alternative, you can use two micrometer dials positioned on the opposite sides of the coupling (to calculate the difference of the two micrometer dials when rotating the coupling).	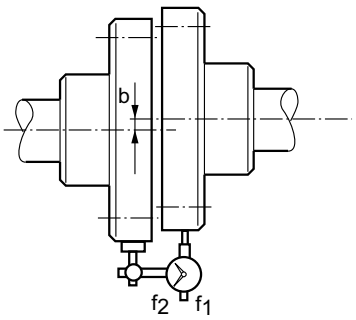 The following figure shows how to measure axial misalignment using a more accurate measuring method, as described above. The coupling halves are rotated together without letting the point of the micrometer dial slide onto the measuring surface. The axial misalignment is obtained by dividing the deviation displayed on the micrometer dial (dimension "b").

5.17 Motor adapter /MA

5.17.1 Maximum permitted motor weight

Two criteria must be checked before mounting a motor to the gear unit.

1. Maximum motor weight depends on gear unit design and mounting type
2. Maximum motor weight depends on motor adapter size

INFORMATION

The motor weight must not exceed any of the two criteria.

1. Maximum motor weight depends on gear unit design and mounting type

INFORMATION

- The following tables apply only to stationary applications. For mobile applications (e.g. travel drives), consult SEW-EURODRIVE.
- Contact SEW-EURODRIVE in case of deviating mounting position/mounting surface.

The following applies to all tables:

G_M = Motor weight

G_G = Gear unit weight

Horizontal gear units

Type of mounting	Mounting position M. / mounting surface F. M1 / F1 and M3 / F2		
	X.F..	X.K..	X.T..
Foot-mounted X../ B	$G_M \leq 1.5\ G_G$	$G_M \leq 1.75\ G_G$	$G_M \leq 2.0\ G_G$
Shaft-mounted X../ T	$G_M \leq 0.5\ G_G$	$G_M \leq 1.5\ G_G$	$G_M \leq 1.5\ G_G$
Flange-mounted X../ F	$G_M \leq 0.5\ G_G$	$G_M \leq 0.5\ G_G$	$G_M \leq 0.5\ G_G$

Vertical gear units

INFORMATION

- When using the shaft-mounted version, please consult SEW-EURODRIVE.
- Gear unit with mounting position M. / mounting surface F.: For M5 / F4 and M6 / F3, please contact SEW-EURODRIVE.

Type of mounting	Mounting position M. / mounting surface F. M5 / F3 and M6 / F4		
	X.F..	X.K..	X.T..
Foot-mounted X../ B	$G_M \leq 2.0\ G_G$	$G_M \leq 1.5\ G_G$	$G_M \leq 1.75\ G_G$
Flange-mounted X../ F	$G_M \leq 1.5\ G_G$	$G_M \leq 0.75\ G_G$	$G_M \leq 1.25\ G_G$

Upright gear units

Type of mounting	Mounting position M. / mounting surface F. M4 / F6 X.F..	X.K..	X.T..
Foot-mounted X../ B	$G_M \leq 1.25\ G_G$	$G_M \leq 1.75\ G_G$	$G_M \leq 1.5\ G_G$
Shaft-mounted X../ T	$G_M \leq 0.75\ G_G$	$G_M \leq 1.0\ G_G$	$G_M \leq 0.75\ G_G$
Flange-mounted X../ F	$G_M \leq 1.0\ G_G$	$G_M \leq 1.25\ G_G$	$G_M \leq 1.0\ G_G$

2. Maximum motor weight depends on motor adapter size

The following maximum loads on the motor adapter must not be exceeded.

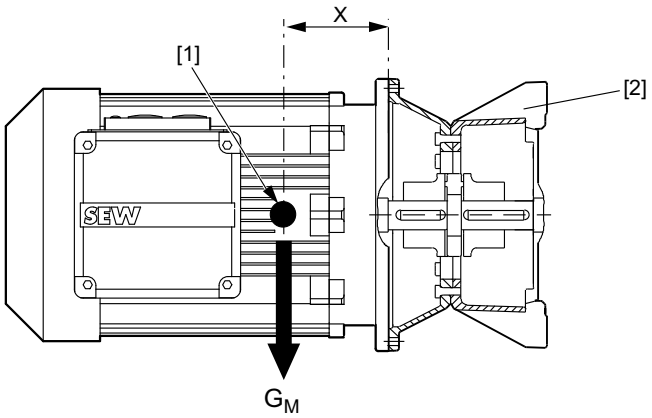

9007199611271819

[1] Center of gravity of the motor
[2] Motor adapter
X = Distance from the center of gravity
G_M = Weight of the mounted motor

INFORMATION

The table only applies to stationary applications. For mobile applications (e.g. travel drives), consult SEW-EURODRIVE.

Motor adapter IEC	Motor adapter NEMA	G_M [kg]	X [mm]
100/112	**182/184**	60	190
132	**213/215**	110	230
160/180	**254/286**	220	310
200	**324**	280	340
225	**326**	400	420
250 / 280	**364 - 405**	820	480
315S-L	**444 - 449**	1450	680
315		2000	740
355		2500	740

The maximum permitted weight G_M must be linearly reduced if the centroidal distance **X** is increased. G_M cannot be increased if the centroidal distance is reduced.

5.17.2 Claw coupling

INFORMATION

Observe the operating instructions of the respective coupling manufacturer.

ROTEX® coupling

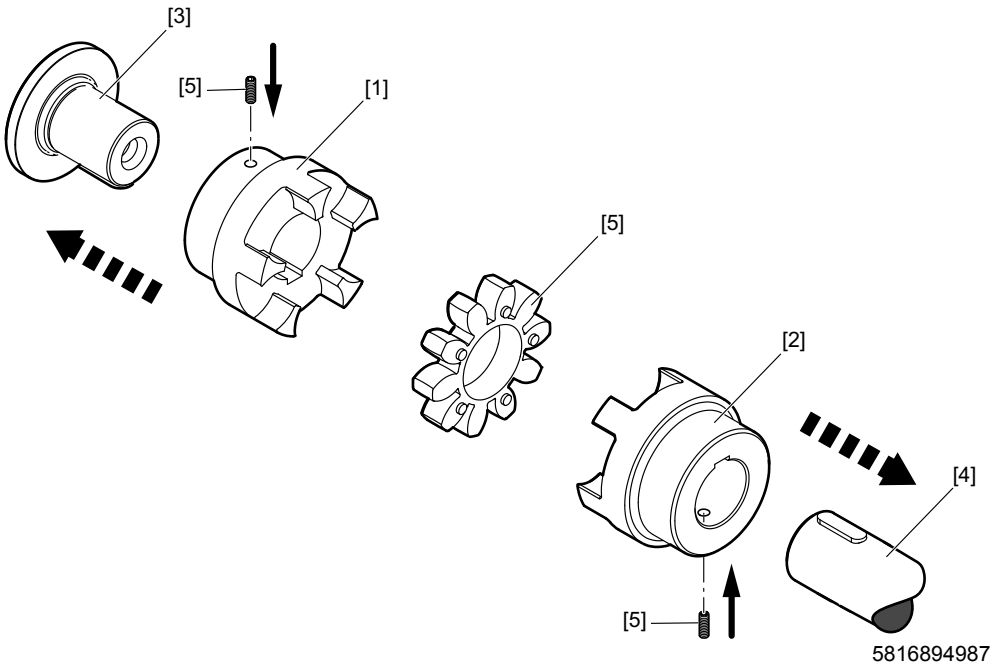

1. Observe the notes in chapter "Notes on Installation/Assembly" (page 81).
2. Mount the hubs [1][2] to the input and output shaft [3][4].
   - ⚠**NOTICE** Improper assembly can damage the hubs [1][2].

     Possible damage to property.
     - Heat the hub to about 80 °C to facilitate assembly.
3. Insert the ring gear [5] and DZ elements in the cam section of the input/output hub [1][2].
4. Push the gear unit/motor in axial direction until dimension **E** is reached. If the gear unit/motor has already been installed permanently, set dimension **E** by moving the hubs [1][2] on the input and output shafts [3][4].
   - ⚠**NOTICE** Improper assembly can damage the couplings [1][2].

     Possible damage to property.
     - During assembly, it is essential to observe **dimension E** so that the ring gear remains axially flexible during operation.

Dimension **E** is shown in the following table.

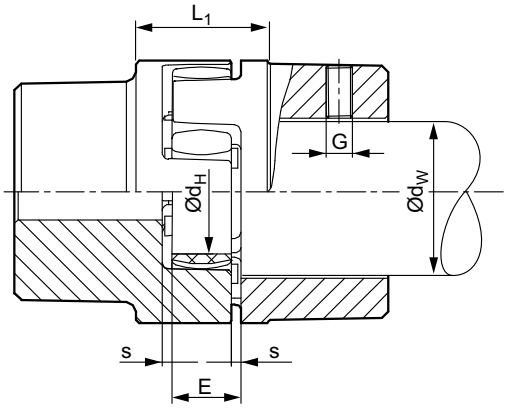

5815628427

Coupling size	Mounting dimensions E [mm]	s [mm]	d_H [mm]	Set screw G	Set screw Tightening torque [Nm]
14	13	1.5	10	M4	1.5
19	16	2	18	M5	2
24	18	2	27	M5	2
28	20	2.5	30	M8	10
38	24	3	38	M8	10
42	26	3	46	M8	10
48	28	3.5	51	M8	10
55	30	4	60	M10	17
65	35	4.5	68	M10	17
75	40	5	80	M10	17
90	45	5.5	100	M12	40
100	50	6	113	M12	40
110	55	6.5	127	M16	80
125	60	7	147	M16	80
140	65	7.5	165	M20	140
160	75	9	190	M20	140
180	85	10.5	220	M20	140

5. Secure the hubs by tightening the set screws [5].

Displacement – Aligning the coupling



NOTICE

Improper mounting of the coupling may result in damage.

Possible damage to property.

- The shaft ends must be aligned accurately to ensure a long service life of the coupling. Strictly adhere to the displacement values specified in the following chapters. Exceeding these values will damage the coupling. Exact coupling alignment increases its service life.

Important:

- The displacement values specified in the table (see next page) are maximum values that must not occur simultaneously. If radial offset and angular offset occur at the same time, the permitted displacement values may only be used proportionately.
- Use dial indicator, linear or feeler gauge to check whether the permitted displacement values specified in the table (see next page) are adhered to.

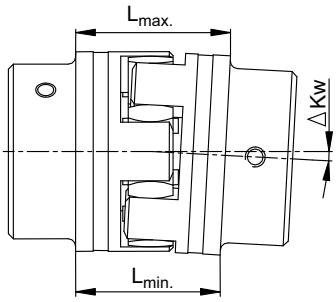

Angular misalignments

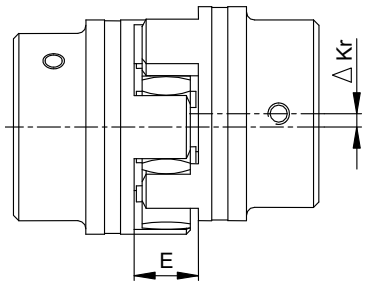

Radial misalignments

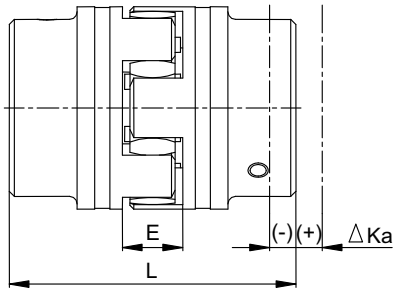

Axial misalignments

$\Delta K_w = L_{1max.} - L_{1min.}$ [mm]

$L_{max} = L + \Delta K_a$ [mm]

5989511307

Example of specified displacement combinations (see diagram):

Example 1:
ΔK_r = 30%
ΔK_w = 70%

Example 2:
ΔK_r = 60%
ΔK_w = 40%

$$\Delta K_{total} = \Delta K_r + \Delta K_w \leq 100\ \%$$

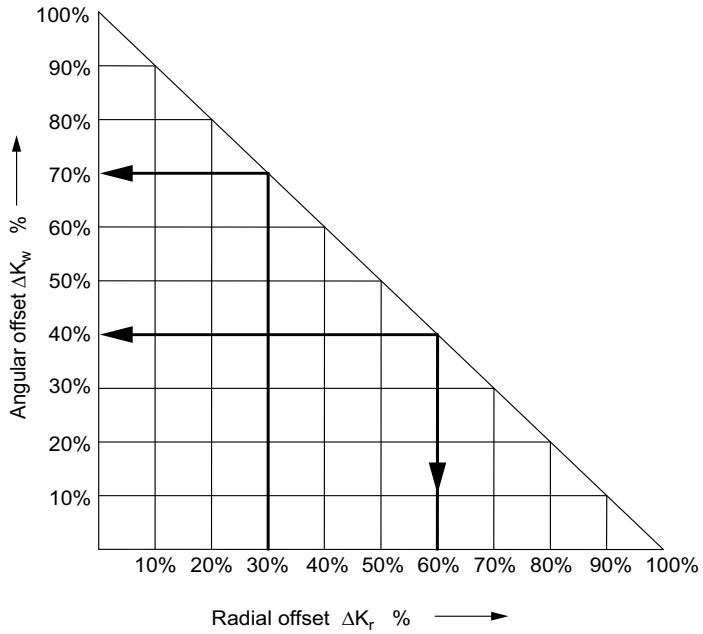

5989508747

Displacement values

The table below shows the displacement values:

ROTEX® size		14	19	24	28	38	42	48	55	65	75	90	100	110	125	140	160	180
max. axial displacement		-0.5	-0.5	-0.5	-0.7	-0.7	-1.0	-1.0	-1.0	-1.0	-1.5	-1.5	-1.5	-2.0	-2.0	-2.0	-2.5	-2.5
ΔK_a [mm]		1.0	1.2	1.4	1.5	1.8	2.0	2.1	2.2	2.6	3.0	3.4	3.8	4.2	4.6	5.0	5.7	6.4
max. radial displacement ΔK_r [mm]	1500 rpm	0.17	0.20	0.22	0.25	0.28	0.32	0.36	0.38	0.42	0.48	0.50	0.52	0.55	0.60	0.62	0.64	0.68
	1800 rpm	0.11	0.13	0.15	0.17	0.19	0.21	0.25	0.26	0.28	0.32	0.34	0.36	0.38	-	-	-	-
ΔK_w [degree] angular displacement when n = 1500 rpm		1.2	1.2	0.9	0.9	1.0	1.0	1.1	1.1	1.2	1.2	1.2	1.2	1.3	1.3	1.2	1.2	1.2
ΔK_w [mm]		0.67	0.82	0.85	1.05	1.35	1.7	2.0	2.3	2.7	3.3	4.3	4.8	5.6	6.5	6.6	7.6	9.0
ΔK_w [degree] angular displacement when n = 3000 rpm		1.1	1.1	0.8	0.8	0.8	0.8	0.9	1.0	1.0	1.0	1.1	1.1	1.1	-	-	-	-
ΔK_w [mm]		0.62	0.7	0.75	0.84	1.1	1.4	1.6	2.0	2.3	2.9	3.8	4.2	5.0	-	-	-	-

5.17.3 Attaching the motor to the motor adapter

1. Clean the motor shaft and flange surfaces of the motor and the motor adapter. They must be dry and free of grease.
   - **INFORMATION** To avoid contact corrosion, SEW-EURODRIVE recommends to apply NOCO® fluid to the motor shaft before mounting the coupling half.
2. Push the coupling half onto the motor shaft and position it. When doing this, observe the information in chapter "Claw coupling" (page 151) and the figure below. The coupling size and type are indicated on the coupling.

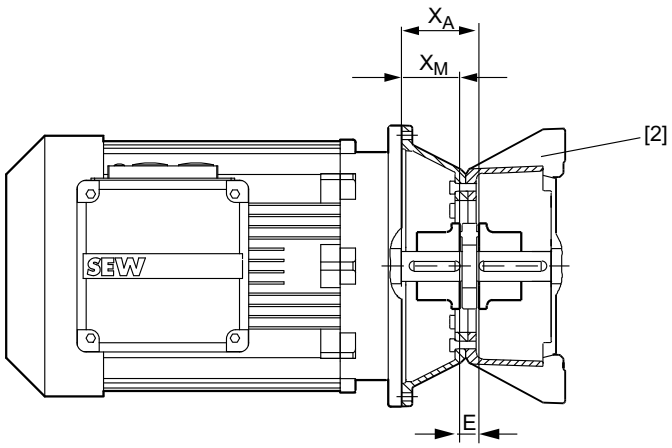

9007199705735691

[1] Motor adapter X_A = Distance between the coupling and the motor adapter flange surface
E = Mounting dimension X_M = Distance between the coupling and the motor flange surface

$\rightarrow X_M = X_A - E$

3. Secure the coupling halves using the setscrew.
4. Install the motor onto the adapter, making sure that the claws of the coupling engage each another.

5.18 V-belt drives /VBD

5.18.1 Maximum permitted motor weight

When selecting a motor, observe the permitted motor weight, the gear unit version and the type of gear unit mounting according to the following table.

The table only applies to stationary applications. For mobile applications (e.g. travel drives), consult SEW-EURODRIVE.

Type of mounting	Gear unit type	
	X.F..	X.K..
Foot-mounted design X../ B	$G_M \leq 1.75\ G_G$	$G_M \leq 1.75\ G_G$
Shaft-mounted design X../ T	$G_M \leq 1.5\ G_G$	$G_M \leq 1.5\ G_G$

The following applies to this table:

G_M = Motor weight

G_G = Gear unit weight

5.18.2 Assembling the V-belt drive

1. Mount the motor [1] to the base plate [2] (mounting screws are not included in the delivery).
2. Clean and degrease the shafts [4], the taper bushings [5] and the belt pulleys [6].

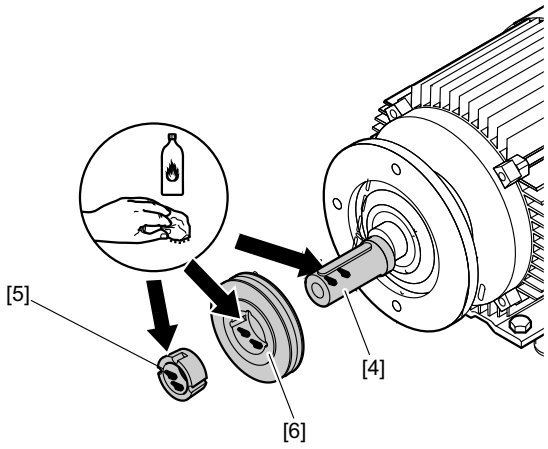

1022665099

3. Install the belt guard [3] using the provided fixtures. Take into account the room required for applying and tightening the belts as well as the desired direction in which the cover will be opened.

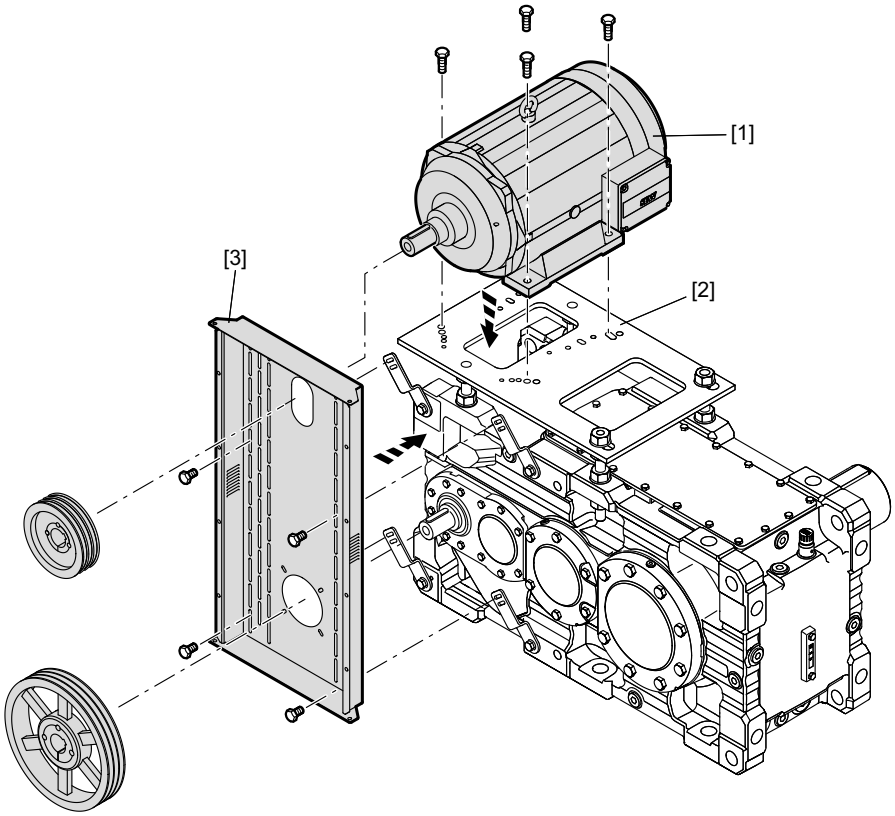

9007200277402251

4. Mount the belt pulleys with the taper bushings [6] on the gear unit and motor shaft [4]. Apply some grease to the screws of the taper bushings and fill the remaining boreholes with grease. Evenly tighten the locking screws of the taper bushings [5]. While tightening the screws, apply some light strokes to the hub to make the connection fit properly.

   The following table shows the tightening torques for the taper lock bushings [5].

Dimension	Wrench size	Number of screws	Tightening torque [Nm]
TB 1008, 1108	3	2	5.7
TB 1210, 1215, 1310, 1610, 1615	5	2	20
TB 2012	6	2	31
TB 2517	6	2	49
TB 3020, 3030	8	2	92
TB 3525, 3535	10	3	115
TB 4040	12	3	172
TB 4545	14	3	195
TB 5050	14	3	275

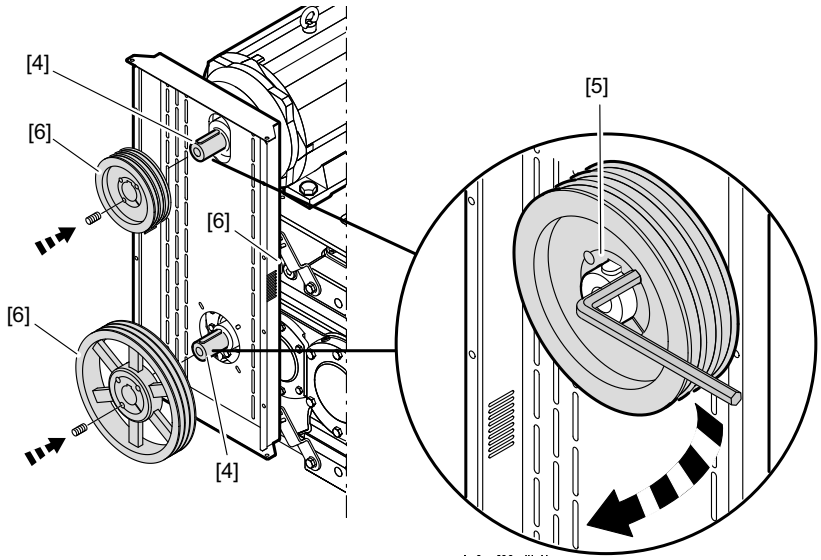

9007200277411851

5. Position the belt pulleys [7] as close to the shaft shoulder as possible [8]. If the respective rim widths differ, you will have to take this into account accordingly for the positioning. Check the alignment of the belt pulleys before and after you have tightened the taper bushings using a straightedge [9] or a suitable alignment tool. The following table lists the maximum permitted misalignment values for individual diameters.

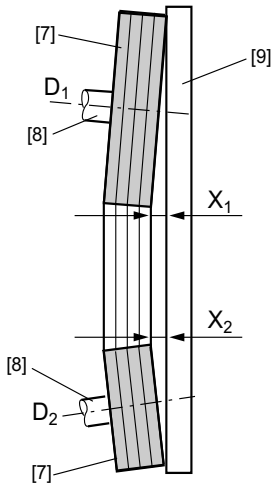

Pulley diameter D_1, D_2 [mm]	Maximum permitted distance X_1, X_2
112	0.5
224	1.0
450	2.0
630	3.0

For other diameter values, you have to interpolate the intermediate values for X_1, X_2.

6. Place the V-belts [8] onto the belt pulleys and tighten them by adjusting the base plate via the threaded rods [9].
   - ⚠**NOTICE** Never apply force to mount the V-belt.

     Possible damage to property.

     – Mounting using a screw driver or similar will damage the V-belt externally and internally.

   - ⚠**CAUTION** Never apply force to mount the V-belt.

     Possible dangerous situation.

     – Be careful not to get your fingers between the disk and the V-belt when adjusting and turning the V-belt pulleys.

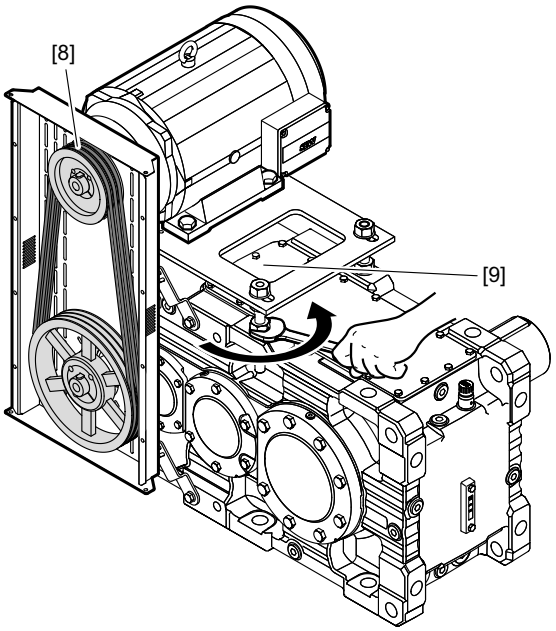

9007200277448075

7. Check the tension of the belts using a suitable measuring device. If no special measuring device is available, you can roughly check the pretension using the following method:
   - Refer to the following table to determine the test force [f] required to deflect the belt by a specific distance [E_a] in the middle of the free belt length if the belt has the correct tension.
   - Compare the measured values with the values given in the the table (on the following pages). Adjust the tension of the belt until the measured values correspond to the values of the table.

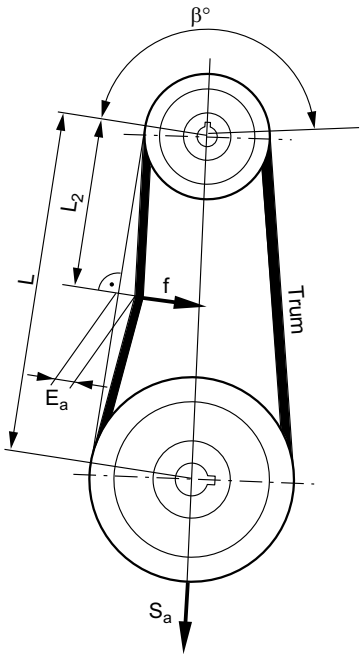

1068875787

8. Tighten all the screws and nuts and once again check the alignment of the belt pulleys as well as the tension of the belt.
9. Check the fastening of the belt guard. Close and bolt it correctly using the designated bores.
10. Check the tension of the belt after about 24 hours of operation to compensate the initial tension of the V-belts. Also check the taper bushings and the respective locking screws.

INFORMATION

The data in the following table applies only if the V-belt from SEW-EURODRIVE is used. When using V-belts from other manufacturers, the operator is responsible for determining the belt tension and for observing the permitted bending moments.

X.F..

Size	Gear ratio	Motor power [kW]	Test force [N]	Indentation depth (mm) Initial assembly	Indentation depth (mm) Used belts	Frequency (1/s) Initial assembly	Frequency (1/s) Used belts
XF100-110	1.25	4	25	9.4	10.7	64	56
		5.5	25	8.2	9.4	67	59
		7.5	25	8.1	9.4	70	62
		9.2	25	8.2	9.4	68	59
		11	25	8.1	9.4	70	61
		15	25	7.0	9.5	73	64
	1.4	4	25	9.5	10.8	63	55
		5.5	25	8.2	9.5	67	59
		7.5	25	8.1	9.4	71	62
		9.2	25	8.2	9.4	67	59
		11	25	8.1	9.4	70	61
		15	25	7.0	9.5	73	64
	1.6	4	25	9.5	10.7	64	56
		5.5	25	8.2	9.4	68	59
		7.5	25	8.0	9.3	71	63
		9.2	25	8.3	9.5	67	59
		11	25	8.0	9.3	71	62
		15	50	12.0	13.2	63	55
	1.8	4	25	9.5	10.7	64	56
		5.5	25	8.2	9.5	67	59
		7.5	25	8.1	9.4	71	62
		9.2	25	8.1	9.3	69	60
		11	25	8.1	9.4	70	61
		15	50	11.9	13.0	64	56
XF120-130	1.25	2.2	25	11.0	12.5	52	45
		3	25	9.6	11.0	60	53
		4	25	12.5	12.5	49	43
		5.5	25	9.6	11.0	57	50
		7.5	25	9.5	11.0	60	53
		9.2	25	9.6	11.1	57	50
		11	25	9.5	11.0	60	52
		15	25	8.2	11.1	62	55
		18.5	50	13.0	15.3	57	50
		22	50	12.1	13.9	59	52
		30	25	8.2	11.1	62	55
	1.4	2.2	25	11.1	12.6	51	45
		3	25	9.6	11.1	60	52
		4	25	12.6	12.6	49	43
		5.5	25	9.6	11.1	57	50
		7.5	25	9.6	11.1	60	52
		9.2	25	9.6	11.0	58	51
		11	25	9.6	11.1	59	52
		15	25	8.2	11.1	63	55
		18.5	50	13.0	15.4	57	50
		22	50	12.0	13.9	59	52
		30	25	8.2	11.1	63	55
	1.6	2.2	25	11.0	12.5	52	46
		3	25	9.5	11.0	60	53
		4	25	12.5	12.5	50	44

Size	Gear ratio	Motor power [kW]	Test force [N]	Indentation depth (mm) Initial assembly	Indentation depth (mm) Used belts	Frequency (1/s) Initial assembly	Frequency (1/s) Used belts
XF120-130	1.6	5.5	25	9.5	11.0	58	51
		7.5	25	9.5	11.0	60	53
		9.2	25	9.6	11.1	57	50
		11	25	9.5	11.0	59	52
		15	50	13.9	15.3	54	48
		18.5	50	13.0	15.3	57	50
		22	50	11.9	13.8	60	53
		30	75	12.7	15.9	56	49
	1.8	2.2	25	11.0	12.4	52	46
		3	25	9.5	11.0	61	53
		4	25	12.4	12.4	50	44
		5.5	25	9.5	11.0	58	51
		7.5	25	9.4	10.8	61	54
		9.2	25	9.4	10.9	59	51
		11	25	9.4	10.8	61	53
		15	50	14.0	15.4	54	47
		18.5	50	12.9	15.1	58	51
		22	50	11.9	13.8	60	53
		30	75	13.1	16.3	54	48

Size	Gear ratio	Motor power [kW]	Test force [N]	Indentation depth (mm) Initial assembly	Indentation depth (mm) Used belts	Frequency (1/s) Initial assembly	Frequency (1/s) Used belts
XF140-150	1.25	2.2	25	11.0	12.5	52	45
		3	25	9.6	11.0	60	53
		4	25	12.5	12.5	49	43
		5.5	25	9.6	11.0	57	50
		7.5	25	9.5	11.0	60	53
		9.2	25	9.6	11.1	57	50
		11	25	9.5	11.0	60	52
		15	25	8.2	11.1	62	55
		18.5	50	15.8	18.6	47	41
		22	50	14.6	16.9	49	43
		30	25	9.9	13.4	51	45
		37	75	17.0	19.7	43	38
		45	75	14.7	18.5	45	40
	1.4	2.2	25	11.1	12.6	51	45
		3	25	9.6	11.1	60	52
		4	25	12.6	12.6	49	43
		5.5	25	9.6	11.1	57	50
		7.5	25	9.6	11.1	60	52
		9.2	25	9.6	11.0	58	51
		11	25	9.6	11.1	59	52
		15	25	8.2	11.1	63	55
		18.5	50	15.8	18.7	47	41
		22	50	14.6	16.9	49	43
		30	25	9.9	13.4	51	45
		37	75	16.7	19.4	44	39
		45	75	14.1	19.0	46	40
	1.6	2.2	25	11.0	12.5	52	46
		3	25	9.5	11.0	60	53
		4	25	12.5	12.5	50	44
		5.5	25	9.5	11.0	58	51
		7.5	25	9.5	11.0	60	53
		9.2	25	9.6	11.1	57	50
		11	25	9.5	11.0	59	52
		15	50	13.9	15.3	54	48
		18.5	50	15.7	18.5	47	41
		22	50	14.5	16.8	49	43
XF140-150	1.6	30	75	15.9	19.8	45	39
		37	50	13.8	15.9	52	45
		45	75	13.4	18.1	48	42
	1.8	2.2	25	11.0	12.4	52	46
		3	25	9.5	11.0	61	53
		4	25	12.4	12.4	50	44
		5.5	25	9.5	11.0	58	51
		7.5	25	9.4	10.8	61	54
		9.2	25	9.4	10.9	59	51
		11	25	9.4	10.8	61	53
		15	50	14.0	15.4	54	47
		18.5	50	15.7	18.5	47	42
		22	50	14.9	17.2	48	42
		30	75	16.1	20.1	44	39
		37	50	13.7	15.8	52	46
		45	75	15.6	19.5	44	39

Size	Gear ratio	Motor power [kW]	Test force [N]	Indentation depth (mm) Initial assembly	Indentation depth (mm) Used belts	Frequency (1/s) Initial assembly	Frequency (1/s) Used belts
XF160-170	1.25	4	25	12.5	12.5	49	43
		5.5	25	13.5	15.3	45	39
		7.5	25	11.7	13.5	49	43
		9.2	25	13.5	15.3	45	39
		11	25	11.7	13.5	48	43
		15	25	9.9	13.4	51	45
		18.5	50	15.8	18.6	47	41
		22	50	14.6	16.9	49	43
		30	25	9.9	13.4	51	45
		37	75	17.0	19.7	43	38
		45	75	16.5	20.8	40	35
		55	75	15.6	19.5	42	37
		75	75	16.9	21.3	40	35
		90	75	13.6	18.2	44	38
	1.4	4	25	12.6	12.6	49	43
		5.5	25	13.4	15.2	45	40
		7.5	25	11.7	13.5	49	43
		9.2	25	13.5	15.2	45	39
		11	25	11.7	13.5	49	43
		15	25	9.9	13.4	51	45
		18.5	50	15.8	18.7	47	41
		22	50	14.6	16.9	49	43
		30	25	9.9	13.4	51	45
		37	75	16.7	19.4	44	39
		45	75	16.5	20.7	42	37
		55	75	16.0	19.9	41	36
		75	75	16.1	20.3	42	37
		90	75	13.0	17.4	46	40
	1.6	4	25	12.5	12.5	50	44
		5.5	25	13.4	15.2	45	40
		7.5	25	11.7	13.5	49	43
		9.2	25	13.5	15.3	45	39
		11	25	11.7	13.5	48	42
		15	50	17.1	18.7	44	39
		18.5	50	15.7	18.5	47	41
		22	50	14.5	16.8	49	43
		30	75	15.9	19.8	45	39
		37	50	13.8	15.9	52	45
		45	75	16.0	21.6	40	35

Size	Gear ratio	Motor power [kW]	Test force [N]	Indentation depth (mm) Initial assembly	Indentation depth (mm) Used belts	Frequency (1/s) Initial assembly	Frequency (1/s) Used belts
XF160-170	1.6	55	75	16.5	20.9	41	36
		75	75	16.8	21.2	41	36
		90	75	13.5	18.2	44	39
	1.8	4	25	12.4	12.4	50	44
		5.5	25	13.4	15.2	45	40
		7.5	25	11.7	13.5	49	43
		9.2	25	13.5	15.3	45	39
		11	25	11.7	13.5	49	43
		15	50	17.0	18.7	44	39
		18.5	50	15.7	18.5	47	42
		22	50	14.9	17.2	48	42
		30	75	16.1	20.1	44	39
		37	50	13.7	15.8	52	46
		45	75	19.7	22.8	38	33
		55	75	14.4	17.8	44	39
		75	75	15.8	19.9	44	38
		90	75	12.7	17.0	47	41

Size	Gear ratio	Motor power [kW]	Test force [N]	Indentation depth (mm) Initial assembly	Indentation depth (mm) Used belts	Frequency (1/s) Initial assembly	Frequency (1/s) Used belts
XF180-190	1.25	7.5	25	11.7	13.5	49	43
		9.2	25	9.8	13.3	52	46
		11	25	11.7	13.5	48	43
		15	25	9.9	13.4	51	45
		18.5	50	15.8	18.6	47	41
		22	50	14.6	16.9	49	43
		30	75	18.3	21.2	42	37
		37	75	20.5	23.7	36	31
		45	75	17.4	22.0	38	33
		55	75	16.7	20.8	39	34
		75	75	20.2	25.5	34	30
		90	75	18.7	23.3	35	31
		110	75	15.5	20.7	39	34
		132	75	12.2	16.7	42	37
	1.4	7.5	25	11.7	13.5	49	43
		9.2	25	9.8	13.2	52	46
		11	25	11.7	13.5	49	43
		15	25	9.9	13.4	51	45
		18.5	50	15.8	18.7	47	41
		22	50	14.6	16.9	49	43
		30	50	15.9	18.7	47	41
		37	75	20.8	24.0	35	31
		45	75	17.8	22.5	39	34
		55	75	16.0	19.9	41	36
		75	75	19.8	25.0	35	30
		90	75	17.2	23.1	36	32
		110	75	16.5	22.2	37	32
		132	75	13.1	17.9	40	35
	1.6	7.5	25	11.7	13.5	49	43
		9.2	25	9.8	13.3	52	46
		11	25	11.7	13.5	48	42
		15	50	17.1	18.7	44	39
		18.5	50	15.7	18.5	47	41
		22	50	14.5	16.8	49	43
		30	75	15.9	19.8	45	39
		37	50	16.3	18.7	44	38
		45	75	16.0	21.6	40	35
		55	75	17.0	21.4	39	35

Size	Gear ratio	Motor power [kW]	Test force [N]	Indentation depth (mm) Initial assembly	Indentation depth (mm) Used belts	Frequency (1/s) Initial assembly	Frequency (1/s) Used belts
XF180-190	1.6	75	75	20.3	25.6	34	30
		90	75	17.4	23.3	36	32
		110	75	15.7	19.6	39	34
		132	75	12.4	17.0	42	37
	1.8	7.5	25	11.7	13.5	49	43
		9.2	25	9.7	13.1	53	47
		11	25	11.7	13.5	49	43
		15	50	17.0	18.7	44	39
		18.5	50	15.7	18.5	47	42
		22	50	14.9	17.2	48	42
		30	75	16.1	20.1	44	39
		37	50	16.1	18.6	44	39
		45	75	20.3	23.4	37	32
		55	75	17.2	21.7	39	34
		75	75	19.8	24.9	35	30
		90	75	17.5	23.4	36	31
		110	75	15.0	20.0	38	33
		132	75	12.7	17.4	41	36

Size	Gear ratio	Motor power [kW]	Test force [N]	Indentation depth (mm) Initial assembly	Indentation depth (mm) Used belts	Frequency (1/s) Initial assembly	Frequency (1/s) Used belts
XF200-210	1.25	7.5	25	11.7	13.5	49	43
		9.2	25	9.8	13.3	52	46
		11	25	11.7	13.5	48	43
		15	25	9.9	13.4	51	45
		18.5	50	15.8	18.6	47	41
		22	50	14.6	16.9	49	43
		30	75	18.3	21.2	42	37
		37	75	20.5	23.7	36	31
		45	75	17.4	22.0	38	33
		55	75	16.7	20.8	39	34
		75	75	20.2	25.5	34	30
		90	75	18.7	23.3	35	31
		110	75	15.5	20.7	39	34
		132	75	12.2	16.7	42	37
	1.4	7.5	25	11.7	13.5	49	43
		9.2	25	9.8	13.2	52	46
		11	25	11.7	13.5	49	43
		15	25	9.9	13.4	51	45
		18.5	50	15.8	18.7	47	41
		22	50	14.6	16.9	49	43
		30	50	15.9	18.7	47	41
		37	75	20.8	24.0	35	31
		45	75	17.8	22.5	39	34
		55	75	16.0	19.9	41	36
		75	75	19.8	25.0	35	30
		90	75	17.2	23.1	36	32
		110	75	16.5	22.2	37	32
		132	75	13.1	17.9	40	35
	1.6	7.5	25	11.7	13.5	49	43
		9.2	25	9.8	13.3	52	46
		11	25	11.7	13.5	48	42
		15	50	17.1	18.7	44	39
		18.5	50	15.7	18.5	47	41
		22	50	14.5	16.8	49	43
		30	75	15.9	19.8	45	39
		37	50	16.3	18.7	44	38
		45	75	16.0	21.6	40	35
XF200-210	1.6	55	75	17.0	21.4	39	35
		75	75	20.3	25.6	34	30
		90	75	17.4	23.3	36	32
		110	75	15.7	19.6	39	34
		132	75	12.4	17.0	42	37
	1.8	7.5	25	11.7	13.5	49	43
		9.2	25	9.7	13.1	53	47
		11	25	11.7	13.5	49	43
		15	50	17.0	18.7	44	39
		18.5	50	15.7	18.5	47	42
		22	50	14.9	17.2	48	42
		30	75	16.1	20.1	44	39
		37	50	16.1	18.6	44	39
		45	75	20.3	23.4	37	32
		55	75	17.2	21.7	39	34

Size	Gear ratio	Motor power [kW]	Test force [N]	Indentation depth (mm) Initial assembly	Indentation depth (mm) Used belts	Frequency (1/s) Initial assembly	Frequency (1/s) Used belts
XF220-230	1.25	11	50	19.7	21.7	38	33
		15	50	19.8	21.8	38	33
		18.5	50	18.6	21.8	40	35
		22	50	17.5	20.3	41	36
		30	25	11.9	16.1	43	38
		37	75	20.5	23.7	36	31
		45	75	17.4	22.0	38	33
		55	75	18.3	22.8	36	31
		75	75	20.2	25.5	34	30
		90	75	18.7	23.3	35	31
		110	75	19.8	25.0	34	30
		132	75	17.2	23.1	37	32
		160	125	19.1	23.2	32	28
		200	125	16.6	20.5	35	31
	1.4	11	50	20.0	22.0	38	33
		15	25	11.9	16.1	43	38
		18.5	50	19.0	22.3	39	34
		22	50	17.5	20.3	41	36
		30	25	11.9	16.1	43	38
		37	75	18.9	23.6	37	32
		45	75	17.8	22.5	39	34
		55	75	17.5	23.4	36	32
		75	75	19.8	25.0	35	30
		90	75	17.2	23.1	36	32
		110	75	19.4	24.5	35	31
		132	75	16.9	22.6	37	33
		160	125	18.2	22.1	34	30
		200	125	15.8	19.6	37	32
	1.6	11	50	19.7	21.6	38	34
		15	50	20.4	22.4	37	32
		18.5	50	18.7	22.1	40	35
		22	50	17.4	20.1	41	36
		30	75	18.9	23.6	37	33
		37	50	16.3	18.7	44	38
		45	75	16.0	21.6	40	35
		55	75	19.9	25.1	34	30
		75	75	20.3	25.6	34	30
		90	75	17.4	23.3	36	32
		110	75	19.6	24.7	35	30
		132	75	17.0	22.8	37	33

Size	Gear ratio	Motor power [kW]	Test force [N]	Indentation depth (mm) Initial assembly	Indentation depth (mm) Used belts	Frequency (1/s) Initial assembly	Frequency (1/s) Used belts
XF220-230	1.6	160	125	18.2	22.1	34	30
		200	125	15.8	19.6	37	33
	1.8	11	25	14.0	16.2	40	36
		15	50	20.0	22.0	38	33
		18.5	50	18.8	22.2	39	35
		22	50	17.2	19.9	42	37
		30	75	19.4	24.2	36	32
		37	50	16.1	18.6	44	39
		45	75	20.3	23.4	37	32
		55	75	17.4	21.6	36	32
		75	75	19.8	24.9	35	30
		90	75	17.5	23.4	36	31
		110	75	20.0	25.3	34	30
		132	75	17.4	21.6	36	32
		160	125	18.9	23.0	33	29
		200	125	16.4	20.4	36	31

X.K..

Size	Gear ratio	Motor power [kW]	Test force [N]	Indentation depth (mm) Initial assembly	Indentation depth (mm) Used belts	Frequency (1/s) Initial assembly	Frequency (1/s) Used belts
XK100-110	1.25	4	25	9.4	10.7	64	56
		5.5	25	8.2	9.4	67	59
		7.5	25	8.1	9.4	70	62
		9.2	25	8.2	9.4	68	59
		11	25	8.1	9.4	70	61
		15	25	7.0	9.5	73	64
		18.5	50	11.0	13.0	64	57
	1.4	4	25	9.5	10.8	63	55
		5.5	25	8.2	9.5	67	59
		7.5	25	8.1	9.4	71	62
		9.2	25	8.2	9.4	67	59
		11	25	8.1	9.4	70	61
		15	25	7.0	9.5	73	64
		18.5	50	11.2	13.2	66	58
	1.6	4	25	9.5	10.7	64	56
		5.5	25	8.2	9.4	68	59
		7.5	25	8.0	9.3	71	63
		9.2	25	8.3	9.5	67	59
		11	25	8.0	9.3	71	62
		15	50	12.0	13.2	63	55
		18.5	50	11.1	13.1	67	58
	1.8	4	25	9.5	10.7	64	56
		5.5	25	8.2	9.5	67	59
		7.5	25	8.1	9.4	71	62
		9.2	25	8.1	9.3	69	60
		11	25	8.1	9.4	70	61
		15	50	11.9	13.0	64	56
		18.5	50	11.0	12.9	68	60

Size	Gear ratio	Motor power [kW]	Test force [N]	Indentation depth (mm) Initial assembly	Indentation depth (mm) Used belts	Frequency (1/s) Initial assembly	Frequency (1/s) Used belts
XK120-130	1.25	5.5	25	9.6	11.0	57	50
		7.5	25	9.5	11.0	60	53
		9.2	25	9.6	11.1	57	50
		11	25	9.5	11.0	60	52
		15	25	8.2	11.1	62	55
		18.5	50	13.0	15.3	57	50
		22	50	12.1	13.9	59	52
		30	25	8.2	11.1	62	55
		37	75	14.0	16.2	52	46
		45	75	14.7	18.5	45	40
	1.4	5.5	25	9.6	11.1	57	50
		7.5	25	9.6	11.1	60	52
		9.2	25	9.6	11.0	58	51
		11	25	9.6	11.1	59	52
		15	25	8.2	11.1	63	55
		18.5	50	13.0	15.4	57	50
		22	50	12.0	13.9	59	52
		30	25	8.2	11.1	63	55
		37	75	13.9	16.1	53	46
		45	75	14.1	19.0	46	40
	1.6	5.5	25	9.5	11.0	58	51
		7.5	25	9.5	11.0	60	53
		9.2	25	9.6	11.1	57	50
		11	25	9.5	11.0	59	52
		15	50	13.9	15.3	54	48
XK120-130	1.6	18.5	50	13.0	15.3	57	50
		22	50	11.9	13.8	60	53
		30	75	12.7	15.9	56	49
		37	50	11.1	12.8	64	57
		45	75	13.4	18.1	48	42
	1.8	5.5	25	9.5	11.0	58	51
		7.5	25	9.4	10.8	61	54
		9.2	25	9.4	10.9	59	51
		11	25	9.4	10.8	61	53
		15	50	14.0	15.4	54	47
		18.5	50	12.9	15.1	58	51
		22	50	11.9	13.8	60	53
		30	75	13.1	16.3	54	48

Size	Gear ratio	Motor power [kW]	Test force [N]	Indentation depth (mm) Initial assembly	Indentation depth (mm) Used belts	Frequency (1/s) Initial assembly	Frequency (1/s) Used belts
XK140-150	1.25	15	25	8.2	11.1	62	55
		18.5	50	15.8	18.6	47	41
		22	50	14.6	16.9	49	43
		30	25	9.9	13.4	51	45
		37	75	17.0	19.7	43	38
		45	75	14.7	18.5	45	40
		55	75	15.5	19.4	42	37
		75	75	16.9	21.3	40	35
		90	75	13.6	18.2	44	38
	1.4	15	25	8.2	11.1	62	55
		18.5	50	15.8	18.6	47	41
		22	50	14.6	16.9	49	43
		30	25	9.9	13.4	51	45
		37	75	17.0	19.7	43	38
		45	75	14.7	18.5	45	40
		55	75	15.5	19.4	42	37
		75	75	16.9	21.3	40	35
		90	75	13.6	18.2	44	38
	1.6	15	25	8.2	11.1	62	55
		18.5	50	15.8	18.6	47	41
		22	50	14.6	16.9	49	43
		30	25	9.9	13.4	51	45
		37	75	17.0	19.7	43	38
		45	75	14.7	18.5	45	40
		55	75	15.5	19.4	42	37
		75	75	16.9	21.3	40	35
		90	75	13.6	18.2	44	38
	1.8	15	25	8.2	11.1	62	55
		18.5	50	15.8	18.6	47	41
		22	50	14.6	16.9	49	43
		30	25	9.9	13.4	51	45
		37	75	17.0	19.7	43	38
		45	75	14.7	18.5	45	40
		55	75	15.5	19.4	42	37
		75	75	16.9	21.3	40	35
		90	75	13.6	18.2	44	38

Size	Gear ratio	Motor power [kW]	Test force [N]	Indentation depth (mm) Initial assembly	Indentation depth (mm) Used belts	Frequency (1/s) Initial assembly	Frequency (1/s) Used belts
XK160-170	1.25	22	50	14.6	16.9	49	43
		30	25	9.9	13.4	51	45
		37	75	17.0	19.7	43	38
		45	75	16.5	20.8	40	35
		55	75	15.5	19.4	42	37
		75	75	16.9	21.3	40	35
		90	75	13.6	18.2	44	38
		110	75	12.4	16.5	46	41
		132	75	11.2	12.0	56	49
	1.4	22	50	14.6	16.9	49	43
		30	25	9.9	13.4	51	45
		37	75	16.7	19.4	44	39
		45	75	16.5	20.7	42	37
		55	75	14.9	18.6	44	39
		75	75	16.1	20.3	42	37
		90	75	13.0	17.4	46	40
		110	75	13.3	17.8	45	40
		132	75	10.8	11.1	57	50
	1.6	22	50	14.5	16.8	49	43
		30	75	15.9	19.8	45	39
		37	50	13.8	15.9	52	45
		45	75	16.0	21.6	40	35
		55	75	16.5	20.9	41	36
		75	75	16.8	21.2	41	36
		90	75	13.5	18.2	44	39
		110	75	16.1	17.2	47	41
		132	75	13.9	14.6	51	45
	1.8	22	50	14.9	17.2	48	42
		30	75	16.1	20.1	44	39
		37	50	13.7	15.8	52	46
		45	75	19.7	22.8	38	33
		55	75	16.1	20.3	42	37
		75	75	15.8	19.9	44	38
		90	75	12.7	17.0	47	41
		110	75	15.1	15.8	49	43
		132	75	12.6	13.7	53	47

Size	Gear ratio	Motor power [kW]	Test force [N]	Indentation depth (mm) Initial assembly	Indentation depth (mm) Used belts	Frequency (1/s) Initial assembly	Frequency (1/s) Used belts
XK180-190	1.25	30	75	18.3	21.2	42	37
		37	75	20.5	23.7	36	31
		45	75	17.4	22.0	38	33
		55	75	16.7	20.8	39	34
		75	75	20.2	25.5	34	30
		90	75	18.7	23.3	35	31
		110	75	15.5	20.7	39	34
		132	75	12.2	16.7	42	37
	1.4	30	50	15.9	18.7	47	41
		37	75	20.8	24.0	35	31
		45	75	17.8	22.5	39	34
		55	75	16.0	19.9	41	36
		75	75	19.8	25.0	35	30
		90	75	17.2	23.1	36	32
		110	75	16.5	22.2	37	32
		132	75	13.1	17.9	40	35
	1.6	30	75	15.9	19.8	45	39
		37	50	16.3	18.7	44	38
		45	75	16.0	21.6	40	35
XK180-190	1.6	55	75	17.0	21.4	39	35
		75	75	20.3	25.6	34	30
		90	75	17.4	23.3	36	32
		110	75	15.7	19.6	39	34
		132	75	12.4	17.0	42	37
	1.8	30	75	16.1	20.1	44	39
		37	50	16.1	18.6	44	39
		45	75	20.3	23.4	37	32
		55	75	17.2	21.7	39	34
		75	75	19.8	24.9	35	30
		90	75	17.5	23.4	36	31
		110	75	15.0	20.0	38	33
		132	75	12.7	17.4	41	36

Size	Gear ratio	Motor power [kW]	Test force [N]	Indentation depth (mm) Initial assembly	Indentation depth (mm) Used belts	Frequency (1/s) Initial assembly	Frequency (1/s) Used belts
XK200-210	1.25	30	50	20.1	23.8	36	32
		37	50	18.8	22.1	40	35
		45	75	18.7	23.4	38	33
		55	75	18.3	22.8	36	31
		75	75	20.2	25.5	34	30
		90	75	18.7	23.3	35	31
		110	75	19.8	25.0	34	30
		132	75	17.2	23.1	37	32
		160	125	19.1	23.2	32	28
		200	125	16.6	20.5	35	31
	1.4	30	75	23.4	27.1	33	29
		37	75	20.2	25.3	36	31
		45	75	17.2	21.7	39	34
		55	75	17.5	23.4	36	32
		75	75	19.8	25.0	35	30
		90	75	17.2	23.1	36	32
		110	75	19.4	24.5	35	31
		132	75	16.9	22.6	37	33
		160	125	18.2	22.1	34	30
		200	125	15.8	19.6	37	32
	1.6	30	75	22.4	27.8	33	29
		37	75	19.1	23.9	36	32
		45	75	16.0	21.6	40	35
		55	75	19.9	25.1	34	30
		75	75	20.3	25.6	34	30
		90	75	17.4	23.3	36	32
		110	75	19.6	24.7	35	30
		132	75	17.0	22.8	37	33
		160	125	18.2	22.1	34	30
		200	125	15.8	19.6	37	33
	1.8	30	75	21.9	27.2	34	30
		37	75	18.8	23.4	37	33
		45	75	20.3	23.4	37	32
		55	75	17.4	21.6	36	32
		75	75	19.8	24.9	35	30
		90	75	17.5	23.4	36	31
		110	75	20.0	25.3	34	30
		132	75	17.4	21.6	36	32
		160	125	18.9	23.0	33	29
		200	125	16.4	20.4	36	31
XK220-230	1.25	37	50	18.8	22.1	40	35
		45	75	18.7	23.4	38	33

Size	Gear ratio	Motor power [kW]	Test force [N]	Indentation depth (mm) Initial assembly	Indentation depth (mm) Used belts	Frequency (1/s) Initial assembly	Frequency (1/s) Used belts
XK220-230	1.25	55	75	18.3	22.8	36	31
		75	75	20.2	25.5	34	30
		90	75	18.7	23.3	35	31
		110	75	19.8	25.0	34	30
		132	75	17.2	23.1	37	32
		160	125	19.1	23.2	32	28
		200	125	16.6	20.5	35	31
	1.4	30	75	23.4	27.1	33	29
		37	75	20.2	25.3	36	31
		45	75	17.2	21.7	39	34
		55	75	17.5	23.4	36	32
		75	75	19.8	25.0	35	30
		90	75	17.2	23.1	36	32
		110	75	19.4	24.5	35	31
		132	75	16.9	22.6	37	33
		160	125	18.2	22.1	34	30
		200	125	15.8	19.6	37	32
	1.6	30	75	22.4	27.8	33	29
		37	75	19.1	23.9	36	32
		45	75	16.0	21.6	40	35
		55	75	19.9	25.1	34	30
		75	75	20.3	25.6	34	30
		90	75	17.4	23.3	36	32
		110	75	19.6	24.7	35	30
		132	75	17.0	22.8	37	33
		160	125	18.2	22.1	34	30
		200	125	15.8	19.6	37	33
	1.8	30	75	21.9	27.2	34	30
		37	75	18.8	23.4	37	33
		45	75	20.3	23.4	37	32
		55	75	17.4	21.6	36	32
		75	75	19.8	24.9	35	30
		90	75	17.5	23.4	36	31
		110	75	20.0	25.3	34	30
		132	75	17.4	21.6	36	32
		160	125	18.9	23.0	33	29

5.19 Base frame /BF

Observe the following notes:

- The support structure of the foot mounting must be rigid and adequately dimensioned.
- The base plate must only be bolted onto the gear unit foundation at the mounting hole positions provided for this purpose. It is important that the base frame is not deformed (hazard of damage to gear unit and coupling),
- Do not twist the base frame by misaligning the gear unit output shaft to the machine shaft.

5.20 Swing base /SB

Note the following:

- The system must be adequately dimensioned to be able to absorb the torque of the torque arm.
- Do not twist the swing base during assembly (hazard of damage to gear unit and coupling).

5.21 Motor pump /ONP

INFORMATION

Before installation/assembly, first read the addendum to the operating instructions "Motor Pump /ONP", which includes the manufacturer's documentation.

5.22 Fan /FAN

Note the following:

- When protective devices for couplings or similar are installed on gear units equipped with a fan, sufficient clearance must be provided for cooling air intake.

  See the dimension drawing in the catalog or the order documents for the required distance.
- Never operate the gear unit without the protective housing.
- Protect the fan guard from external damage.
- Make sure the air intake vents of the fan are not blocked or covered.

Observe the following tightening torques for installing the fan guard

Screws/nuts	Tightening torques Strength class 8.8 [Nm]
M8	5

5.23 Water cooling cover /CCV

5.23.1 Notes on connection/installation

NOTICE

Improper mounting of the water cooling cover may result in damage to the gear unit.

Possible damage to property.

- Observe the following notes:

- Using calking strip on the pipe threads increases the resistance between the connection parts as well as the risk of cracking in the water cooling cover. Do not tighten the threads excessively.
- The water cooling cover is not equipped with a water drain. In the event of repair work, you have to install a drain on the cooling water outlet to ensure proper draining of the cooling water.
- Connect the water cooling cover to the existing cooling circuit. The direction of flow is user-defined.
- Cooling water temperature and volume flow according to the order documents.
- Make sure the cooling water pressure does not exceed 6 bars.
- In the event of temperature levels below 0 °C and longer downtimes, drain the cooling water from the circuit. Use compressed air to remove any remaining water.
- Refer to section "Cooling media" to determine the permitted cooling media.

The following measures can be taken to ensure proper functioning in different systems:

- Install a safety valve in the cooling water inlet to prevent fluctuations in pressure and volume.
- Install filters in the cooling water inlet to prevent the heat exchanger from dirt and mud in particular if the cooling water is obtained from sources other than the municipal water supply system.
- Install an automatic throttle valve in the respective inlet to compensate pressure.

5.23.2 Removal

Observe the notes in chapter "Inspection/Maintenance" (page 231).

5.23.3 Cooling media

INFORMATION

- Note that the service life, the efficiency, and the maintenance intervals of the heat exchanger depend to a great degree on the quality and ingredients of the cooling medium.
- Special procedures are required when sea water or brackish water is used. Consult SEW-EURODRIVE

Permitted cooling media

- The permitted cooling media is pure water. Cooling water additives, such as antifreeze or corrosion inhibitor, might negatively influence the cooling performance and compatibility of materials. Consult SEW-EURODRIVE.
- Cooling water temperature and flow rate of oil and cooling water according to the order documents.

Dirt

The quantity of suspended solids (ball-shaped, particle size < 0.25 mm) should be less than 10 mg/l. Threadlike contaminants increase the risk of pressure loss.

Corrosion

Limit values: free chlorine < 0.5 ppm, chlorine ions < 200 ppm, sulfate < 100 ppm, ammonia < 10 ppm, free CO < 10 ppm, pH 7-9.

The following ions do not have a corrosive effect under normal conditions: phosphate, nitrate, nitrite, iron, manganese, sodium, potassium.

5.24 Water cooling cartridge /CCT

5.24.1 Notes on connection / installation



NOTICE

Improper mounting of the water cooling cartridge may result in damage to the gear unit.

Possible damage to property.

- Observe the following notes:

- Using calking strip on the pipe threads increases the resistance between the connection parts as well as the risk of cracking in the cast parts of the water cooling cartridge. Do not tighten the threads excessively.
- The water cooling cartridges are not equipped with a water drain. In the event of repair work, you have to install a drain on the cooling water outlet to ensure proper draining of the cooling water.
- For connecting the water cooling cartridge, use only piping and mounting parts of the same or of compatible material.
- Check the water cooling cartridge to see that it is free from soiling and foreign objects in the pipe connection to ensure unobstructed flow of the cooling media.
- Avoid tensions on the connection points when connecting the piping. Support the pipes properly, if required.
- Install the cooling water outlet pipe in such a way that the water cooling cartridge is permanently flooded by cooling water.
- Refer to section "Cooling media" (page 180) to determine the permitted cooling media.
- Cooling water temperature and volume flow according to the order documents.
- Make sure the cooling water pressure does not exceed 10 bars.
- In the event of temperature levels below 0 °C and longer downtimes, drain the cooling water from the circuit. Use compressed air to remove any remaining water.
- The recommended filtering is 100 µm.
- Connect the water-cooling cartridge to the existing cooling circuit. The direction of flow is user-defined.

- For gear units with 2 water cooling cartridges, connect the cooling circuit in parallel, see following figure.

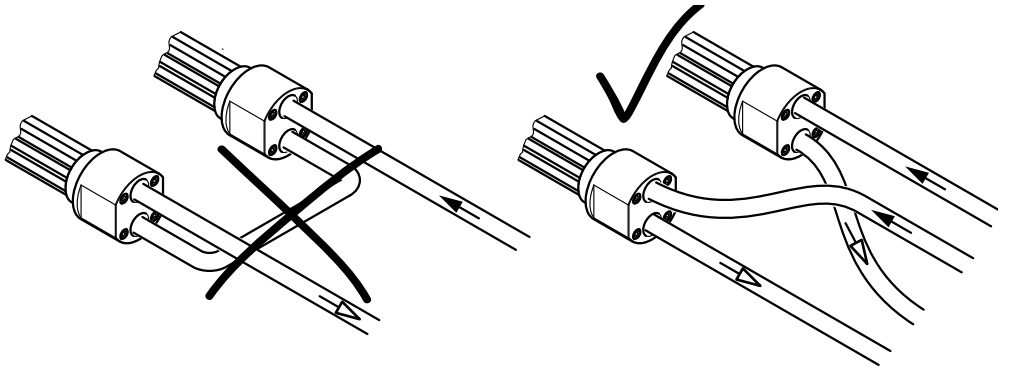

370075915

Inflow (cold water)
Return (warm water outflow)

The following measures can be taken to ensure proper functioning in different systems:

- Install a safety valve in the cooling water inlet to prevent fluctuations in pressure and volume.
- Install filters in the cooling water inlet to protect the heat exchanger from dirt and mud in particular if the cooling water is obtained from sources other than the municipal water supply system.
- Install an automatic throttle valve in the respective inlet to compensate pressure.

5.24.2 Removal

Observe the notes in chapter "Inspection/Maintenance" (page 233).

5.24.3 Requirements on the water quality

INFORMATION

Special measures have to be taken when using sea water or brackish water. Consult SEW-EURODRIVE

The following requirements on the water quality are recommendations. In exceptional cases, certain concentrations of substances of content might cause unforeseen reactions.

The quality of the water as well as its substances are important factors for assessing the cooling water available for water cooling cartridges. The water quality is determined by the water hardness and the pH value of the water.

Water hardness

Water hardness is defined by the amount of hardeners (carbonates and bicarbonates) in the water. Hardeners accumulate on the surface of the water cooling cartridge in particular at high temperatures and in this way impair the performance. Take these deposits into account when selecting the water cooling cartridge for extremely hard water.

The following table shows the classification of German degrees of hardness to water quality °dH:

Degree of hardness[1)]	Water quality
0 – 5 °dH	Very soft water
5 – 10 °dH	Soft water
10 – 20 °dH	Medium hard water
20 – 30 °dH	Hard water
> 30 °dH	Very hard water

1) 10 mg/l of hardener corresponds to 1 °dH

pH value

- The water cooling cartridge partially consists of a copper and nickel alloy, to which the following applies:

  → Corrosion problems when **pH value < 6**
- With alkaline water:

  → Corrosion problems when **water hardness < 6°dH**.

  Smaller values can cause corrosion due to free carbonic acid.

  The following table describes the classification of the water quality based on the pH value:

pH value	Water quality
4.5	Very acidic
4.5 – 6.0	Acidic
6.0 – 6.8	Slightly acidic
7.0	Neutral
7.2 – 7.7	Slightly alkaline
7.7 – 8.2	Alkaline
8.2	Very alkaline

Cooling water assessment based on water substances

The following table provides an overview of the resistance of copper pipes against substances in non-potable water.

Assessment criterion	Approximate concentration [mg/l]	Assessment CuNi10Fe1Mn
pH value	< 6	0
	6 to 9	+
	> 9	0
Chloride	to 1000	+
	> 1000	+ (< 25000 mg/l)
Sulfate	up to 70	+
	70 to 300	+
	> 300	+ (< 25000 mg/l)
Nitrate	up to 100	+
	> 100	0
Free (aggressive) carbonic acid	up to 20	+
	20 to 50	0
	> 50	–
Oxygen	up to 2	+
	> 2	+
Ammonium	up to 2	+
	2 to 20	+
	> 20	–
Iron (dissolved)	up to 10	0
	> 10	–
Manganese (dissolved)	up to 1	0
	> 1	–
Free chlorine	up to 5	permanently < 0.5 mg/l
	> 5	intermittently < 3.0 mg/l
Sulfide		0
Ammonia		+ (< 15 mg/l)

Key

0	= usually good resistivity
+	= corrosion problems can occur in particular if several factors are assessed with 0
–	= we advise against use

Types of cooling water/characteristics

Note the following conditions:

Industrial water

- Usually untreated water (no drinking water)
- Often very contaminated
- A water analysis is necessary for assessment
- Copper, brass and steel are very resistant against industrial water

Stream water and river water

- We recommend using copper brass pipes
- Cast iron parts must be protected against corrosion by suitable coating
- Usually untreated water (no drinking water)
- Often very contaminated
- A water analysis is necessary for assessment

5.25 Oil-water cooler for splash lubrication /OWC

INFORMATION

Before installation/assembly, first read the addendum to the operating instructions "Oil-Water Cooler with Motor Pump for Splash Lubricaton /OWC", which includes the manufacturer's documentation.

5.26 Oil-air cooler for splash lubrication /OAC

INFORMATION

Before installation/assembly, first read the addendum to the operating instructions "Oil-Air Cooler for Splash Lubricaton /OAC", which includes the manufacturer's documentation.

5.27 Oil-water cooler for pressure lubrication /OWP

INFORMATION

Before installation/assembly, first read the addendum to the operating instructions "Oil-Water Cooler for Pressure Lubricaton /OWP", which includes the manufacturer's documentation.

5.28 Oil-air cooler for pressure lubrication /OAP

INFORMATION

Before installation/assembly, first read the addendum to the operating instructions "Oil-Air Cooler for Pressure Lubricaton /OAP", which includes the manufacturer's documentation.

5.29 Oil heater /OH



⚠ WARNING

Danger of electric shock.

Severe or fatal injuries

- De-energize the oil heater before you start working on the unit.
- Secure the oil heater against unintended power-up.



NOTICE

Improper installation of the oil heater may result in damage to the gear unit.

Possible damage to property.

- Make sure the heating elements are fully immersed in the oil bath to avoid any damage.



NOTICE

Improper change of the mounting position might result in malfunction of the gear unit heater.

Possible damage to property.

- The mounting position may only be changed after consultation with SEW-EURODRIVE. The warranty will become void without prior consultation.



INFORMATION

The electrical connection of the heating elements and the thermostat may only be established by qualified personnel according to the power supply conditions on site.

Observe the supply voltage and the switching capacity of the thermostat. Improper or incorrect cabling can damage the electrical components.

5.29.1 Notes on the function of the oil heater

- The heater is screwed into the gear unit housing at the factory and is controlled by a thermostat. The trip temperature of the heater is set at the factory depending on the lubricant used.
- The trip point of the thermostat of the oil heater, see table "Thermostat setting on delivery" (page 190) is factory-set to a temperature of about 5 K above the respective limit temperature "initial temperature for gear unit startup", see chapter "Limit temperature for gear unit startup".

  At this temperature, see table "Minimum permitted initial temperature for gear unit start" (page 190), the thermostat disables the oil heater. Only then, the gear unit may be started up. The thermostat activates the oil heater again once the temperature is about 5 K below the trip point.
- In order to prevent the oil from burning, the heating elements of the heater have a maximum capacity. This is why the heating process for cold gear unit oil can take between one and several hours. The exact duration of the heating process before the start varies depending on the gear unit size, type, mounting position, oil fill quantity, and ambient temperature.

  This is why the thermostat has to be energized permanently even when the drive is at a brief standstill.

  If the drive is at standstill over a longer period, for example during holidays, and the thermostat is not energized, you have to make sure that the thermostat is energized in due time before the drive is started up.
- Thermostat and oil heater are installed and ready for operation. Prior to startup, wire them properly and connect them to the power supply.
- Consult SEW-EURODRIVE if a differing oil viscosity class is used or if ambient temperatures fall below the specified limit temperature.
- During installation, check the thermostat setting according to chapter "Thermostat".

5.29.2 Thermostat

Electrical connection

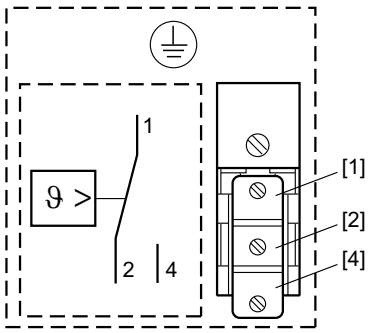

9007199705734027

- Connect to terminals (1, 2 and 4) as shown in the wiring diagram
- Connect the protective earth to terminal "PE"

INFORMATION

Observe the manufacturer's safety instructions.

Technical data

- Ambient temperature: –40 °C to +80 °C
- Scale range: –50 ˚C to +100 °C
- Maximum switching capacity:
  AC 230 V +10%, 10 A
  DC 230 V +10%, 0.25 A
- Cable entry: M20x1.5 for a cabe diameter of 5 to 10 mm
- IP65 degree of protection according to EN 60529

The following figure shows the possible setting range of the thermostat. In this example, the pointer is on 0 °C.

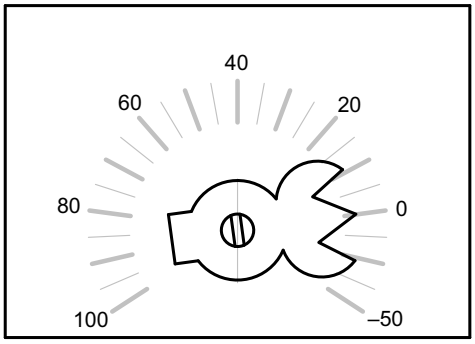

5948400011

5.29.3 Limit temperature for gear unit startup

The minimum permitted ambient temperature/oil temperature for gear unit startup depends on the viscosity of the oil used and the type of lubrication of the gear unit.



NOTICE

Starting up the gear unit below the permitted minimum oil temperature may damage the unit.

Possible damage to property.

- Before startup, the oil must be heated up by the oil heater to the temperature specified under "Initial temperature for gear unit startup" (see following tables).



INFORMATION

The following tables show the limit temperatures (minimum ambient temperatures) for gear unit startup without and with oil heater.

Mineral oil

Factory-set thermostat settings

Type of lubrication	Lubricants		
	ISO VG320	ISO VG220	ISO VG150
	Temperatures set on the thermostat at the factory		
Splash lubrication **Bath lubrication**	–7 °C	–10 °C	–15 °C
Pressure lubrication with shaft end pump	+10 °C	+5 °C	0 °C
Pressure lubrication with motor pump	+20 °C	+15 °C	+10 °C

Minimum permitted initial temperatures for gear unit startup; minimum permitted ambient temperature

Type of lubrication	Variant	Lubricants		
		ISO VG320	ISO VG220	ISO VG150
Splash lubrication **Bath lubrication**	**Initial temperature for gear unit startup** (minimum permitted oil bath temperature)	**–12 °C**	**–15 °C**	**–20 °C**
	Minimum permitted ambient temperature **(1 heating element)**[1)]	–25 °C	–30 °C	–35 °C
	Minimum permitted ambient temperature **(2 heating elements)**[1)]	–40 °C	–40 °C	–40 °C
Pressure lubrication with shaft end pump	**Initial temperature for gear unit startup** (minimum permitted oil bath temperature)	**+5 °C**	**0 °C**	**–5 °C**
	Minimum permitted ambient temperature **(1 heating element)**[1)]	–10 °C	–15 °C	–20 °C
	Minimum permitted ambient temperature **(2 heating elements)**[1)]	–27 °C	–32 °C	–37 °C
Pressure lubrication with motor pump	**Initial temperature for gear unit startup** (minimum permitted oil bath temperature)	**+15 °C**	**+10 °C**	**+5 °C**
	Minimum permitted ambient temperature **(1 heating element)**[1)]	0 °C	–5 °C	–10 °C

1) Gear units with 1 or 2 heating elements can be heated to the initial temperature at minimum permitted ambient temperature and after a sufficient heating period.

INFORMATION

The specified temperatures refer to the average values of the permitted lubricants based on the lubricant table (see chapter 8.2). In borderline cases, the permitted temperature of the lubricant that is actually being used must be verified. When planning the motor, observe the increased starting torque at low temperatures. It may be necessary to contact SEW-EURODRIVE.

Synthetic oil

Factory-set thermostat settings

Type of lubrication	Lubricants		
	ISO VG320	ISO VG220	ISO VG150
	Temperatures set on the thermostat at the factory		
Splash lubrication **Bath lubrication**	–20 °C	–25 °C	–28 °C
Pressure lubrication with shaft end pump	0 °C	–3 °C	–10 °C
Pressure lubrication with motor pump	+13 °C	+8 °C	+2 °C

Minimum permitted initial temperatures for gear unit startup; minimum permitted ambient temperature

Type of lubrication	Variant	Lubricants		
		ISO VG320	ISO VG220	ISO VG150
Splash lubrication **Bath lubrication**	**Initial temperature for gear unit startup** (minimum permitted oil bath temperature)	**–25 °C**	**–30 °C**	**–33 °C**
	Minimum permitted ambient temperature **with heater (1 heating element)**[1)]	–40 °C	–40 °C	–40 °C
	Minimum permitted ambient temperature **With heater (2 heating elements)**[1)]	–40 °C	–40 °C	–40 °C
Pressure lubrication with shaft end pump	**Initial temperature for gear unit startup** (minimum permitted oil bath temperature)	**–5 °C**	**–8 °C**	**–15 °C**
	Minimum permitted ambient temperature **with heater (1 heating element)**[1)]	–20 °C	–25 °C	–30 °C
	Minimum permitted ambient temperature **with heater (2 heating elements)**[1)]	–37 °C	–40 °C	–40 °C
Pressure lubrication with motor pump	**Initial temperature for gear unit startup** (minimum permitted oil bath temperature)	**+8 °C**	**+3 °C**	**–3 °C**
	Minimum permitted ambient temperature **with heater (1 heating element)**[1)]	–10 °C	–15 °C	–20 °C

1) Gear units with 1 or 2 heating elements can be heated to the initial temperature at minimum permitted ambient temperature and after a sufficient heating period.

INFORMATION

The specified temperatures refer to the average values of the permitted lubricants based on the lubricant table (see chapter 8.2). In borderline cases, the permitted temperature of the lubricant that is actually being used must be verified. When planning the motor, observe the increased starting torque at low temperatures. It may be necessary to contact SEW-EURODRIVE.

5.29.4 Connection power and electrical connection of resistor element

The gear unit heater comes equipped with cable glands and jumpers. They are included in the scope of delivery of the screw-in heaters and are already preassembled. The gear unit heater is connected to the power supply via terminal studs. They do not depend on the size of the heater and always have an M4 thread. We recommend using RKS4 ring cable lugs with small grommets.

AC voltage / 1-phase / 230 V / parallel connection

The following figure shows the connection on delivery (with view on the connection area):

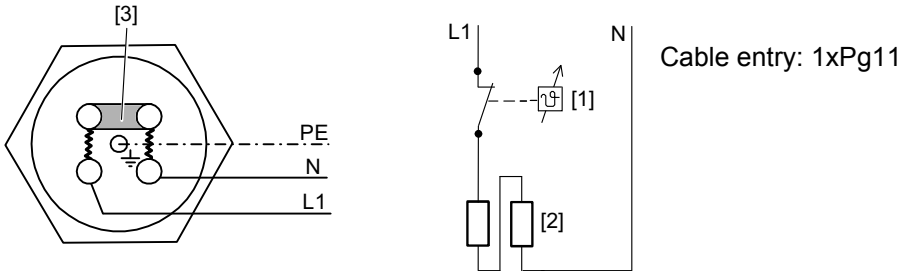

Cable entry: 1xPg11

Observe the electrical characteristics of the control area.
[1] Thermostat
[2] Heater
[3] Jumper

The table below shows the connection power of the heaters that can be installed.

Gear unit		P_{inst} 1 heating element		P_{inst} 2 heating elements	
Size	**Variant**	**[kW]**	**[K/h]**	**[kW]**	**[K/h]**
X100	**X2K / X2F / X3K**	1 x 0.4	6	2 x 0.4	11
	X3T / X3F	1 x 0.3	3	2 x 0.3	7
X110	**X3T / X3F**	1 x 0.3	4	-	-
X120	**X4F / X3T / X4T**	1 x 0.3	3	2 x 0.3	5
X130	**X4F / X3T / X4T**	1 x 0.4	3	-	-
X140	**X4F / X3T / X4T**	1 x 0.4	3	2 x 0.4	5

K/h = Heating power [Kelvin/hour]
P_{inst} = Power of the installed heater

AC voltage / 1-phase / 230 V / parallel connection

The following figure shows the connection on delivery (with view on the connection area):

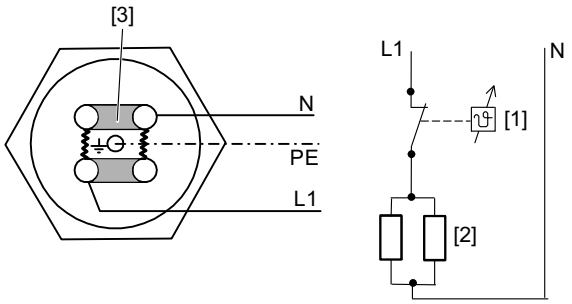

Cable entry: 1xPg11

Observe the electrical characteristics of the control area.
[1] Thermostat
[2] Heater
[3] Jumper

The table below shows the connection power of the heaters that can be installed.

Gear unit		P_{inst} 1 heating element		P_{inst} 2 heating elements	
Size	**Variant**	**[kW]**	**[K/h]**	**[kW]**	**[K/h]**
X110	**X2F / X2K / X3K**	1 x 0.6	6	-	-
X120	**X2K**	1 x 0.6	6	2 x 0.6	11
	X2F / X3K / X3F / X4K	1 x 0.7	6	2 x 0.7	11
X130	**X2F / X2K / X3K / X3F / X4K**	1 x 0.7	5	-	-
X140	**X2K**	1 x 0.7	4	2 x 0.7	9
	X2F / X3F / X3K / X4K	1 x 0.8	5	2 x 0.8	10
X150	**X2K**	1 x 0.8	5	-	-
	X2F / X3F / X3K / X4K	1 x 0.9	5	-	-
	X4F / X3T / X4T	1 x 0.6	3	-	-
X160	**X2K**	1 x 0.9	4	2 x 0.9	8
	X2F / X3F / X3K / X4K	1 x 1.1	4	2 x 1.1	8
	X4F / X3T / X4T	1 x 0.7	3	2 x 0.7	5
X170	**X2K**	1 x 0.9	4	-	-
	X2F / X3F / X3K / X4K	1 x 1.1	4	-	-
	X4F / X3T / X4T	1 x 0.7	3	-	-

K/h = Heating power [Kelvin/hour]
P_{inst} = Power of the installed heater

AC voltage / 1-phase / 230 V / parallel connection / I ≥ 10 A

The following figure shows the connection on delivery (with view on the connection area):

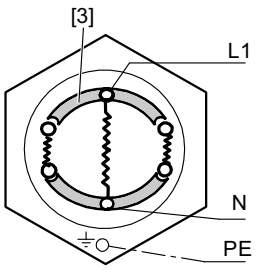

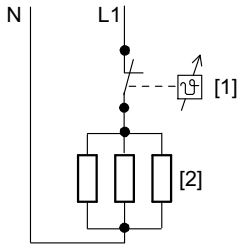

Cable entry: 1xPg16

Observe the electrical characteristics of the control area.
[1] Thermostat
[2] Heater
[3] Jumper

The table below shows the connection power of the heaters that can be installed.

Gear unit		P_{inst} 1 heating element		P_{inst} 2 heating elements	
Size	**Variant**	**[kW]**	**[K/h]**	**[kW]**	**[K/h]**
X180	**X2F / X2K / X3K / X3F / X4K**	1 x 1.6	5	-	-
	X3T / X4F / X4T	1 x 1.1	4	2 x 1.1	7
X190	**X2F / X2K / X3K / X3F / X4K**	1 x 1.6	5	-	-
	X3T / X4F / X4T	1 x 1.1	3	-	-
X200	**X2K**	1 x 1.6	4	-	-
	X2F / X3K / X3F / X4K	1 x 1.8	4	-	-
	X4F / X4T	1 x 1.3	3	-	-
	X3T	1 x 1.1	2	2 x 1.1	5
X210	**X2K**	1 x 1.6	4	-	-
	X2F / X3K / X3F / X4K	1 x 1.8	4	-	-
	X3T / X4F / X4T	1 x 1.3	3	-	-
X220	**X2K**	1 x 1.8	3	-	-
	X2F / X3F / X4F / X3K / X4K / X3T / X4T	1 x 2.2	4	-	-
230X	**X2K**	1 x 1.8	3	-	-
	X2F / X3F / X4F / X3K / X4K / X3T / X4T	1 x 2.2	4	-	-
X240	**X2K**	1 x 1.8	3	-	-
	X2F / X3F / X4F / X3K / X4K / X3T / X4T	1 x 2.2	3	-	-
X250	**X2K**	1 x 2.2	3	-	-

K/h = Heating power [Kelvin/hour]
P_{inst} = Power of the installed heater

AC voltage / 1-phase / 230 V / parallel connection / I ≥ 10 A

The following figure shows the connection on delivery (with view on the connection area):

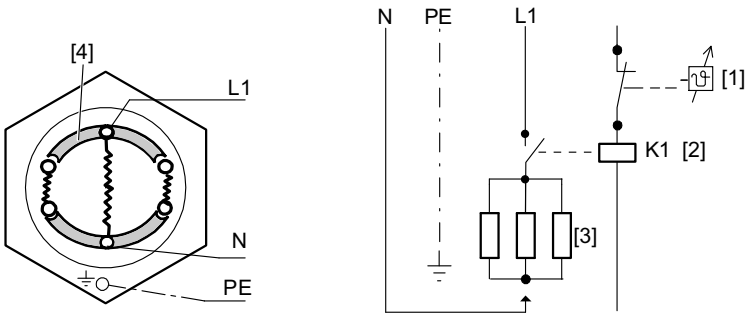

Cable entry: 1xPg16

Observe the electrical characteristics of the control area.
[1] Thermostat
[2] Contactor provided by the customer
[3] Heater
[4] Jumper

The table below shows the connection power of the heaters that can be installed.

Gear unit		P_{inst} 1 heating element		P_{inst} 2 heating elements	
Size	**Variant**	**[kW]**	**[K/h]**	**[kW]**	**[K/h]**
X180	**X2F / X2K / X3K / X3F / X4K**	-	-	2 x 1.6	10
X200	**X2K**	-	-	2 x 1.5	8
	X2F / X3K / X3F / X4K	-	-	2 x 1.8	8
	X4F / X4T	-	-	2 x 1.3	6
X220	**X2K**	-	-	2 x 1.8	7
	X2F / X3F / X4F / X3K / X4K / X3T / X4T	-	-	2 x 2.2	8
X240	**X2K**	-	-	2 x 1.8	5
	X2F / X3F / X4F / X3K / X4K / X3T / X4T	-	-	2 x 2.2	6
X250	**X2F / X3F / X4F / X3K / X4K / X3T / X4T**	1 x 2.6	3	-	-

K/h = Heating power [Kelvin/hour]
P_{inst} = Power of the installed heater

Three-phase AC current / 3-phase / 230/400 V / star connection

The following figure shows the connection as it is received on delivery but with removed jumpers (with view into the connection area):

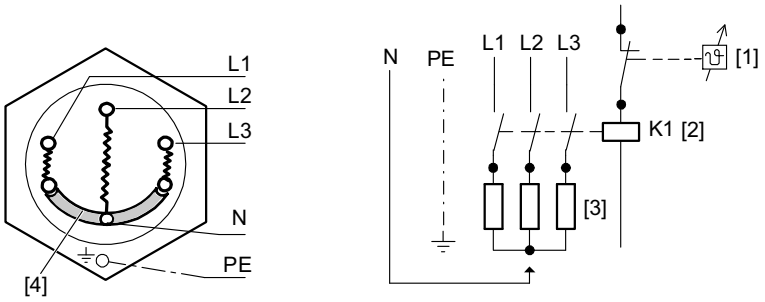

Cable entry: 1xPg16

9007201665362955

Observe the electrical characteristics of the control area.
[1] Thermostat
[2] Contactor provided by the customer
[3] Heater
[4] Jumper (through change of connection as received on delivery)

The table below shows the connection power of the heaters that can be installed.

Gear unit		P_{inst} 1 heating element		P_{inst} 2 heating elements	
Size	**Variant**	**[kW]**	**[K/h]**	**[kW]**	**[K/h]**
X180	**X2F / X2K / X3K / X3F / X4K**	1 x 1.6	5	2 x 1.6	10
	X3T / X4F / X4T	1 x 1.1	4	2 x 1.1	7
X190	**X2F / X2K / X3K / X3F / X4K**	1 x 1.6	5	-	-
	X3T / X4F / X4T	1 x 1.1	3	-	-
X200	**X2K**	1 x 1.6	4	2 x 1.6	8
	X2F / X3K / X3F / X4K	1 x 1.8	5	2 x 1.8	8
	X4F / X4T	1 x 1.3	3	2 x 1.3	6
	X3T	1 x 1.1	2	2 x 1.1	5
X210	**X2K**	1 x 1.6	4	-	-
	X2F / X3K / X3F / X4K	1 x 1.8	4	-	-
	X3T / X4F / X4T	1 x 1.3	3	-	-
X220	**X2K**	1 x 1.8	3	2 x 1.8	7
	X2F / X3F / X4F / X3K / X4K / X3T / X4T	1 x 2.2	4	2 x 2.2	8
X230	**X2K**	1 x 1.8	3	-	-
	X2F / X3F / X4F / X3K / X4K / X3T / X4T	1 x 2.2	4	-	-
X240	**X2K**	1 x 1.8	3	2 x 1.8	5
	X2F / X3F / X4F / X3K / X4K / X3T / X4T	1 x 2.2	3	2 x 2.2	6
X250	**X2K**	1 x 2.2	3	-	-
	X2F / X3F / X4F / X3K / X4K / X3T / X4T	1 x 2.6	3	-	-

K/h = Heating power [Kelvin/hour]
P_{inst} = Power of the installed heater

AC voltage / 2-phase / 400 V / parallel connection

The following figure shows the connection on delivery (with view on the connection area):

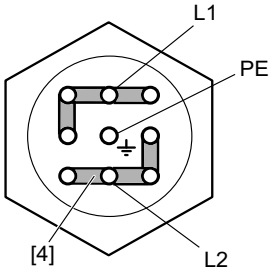

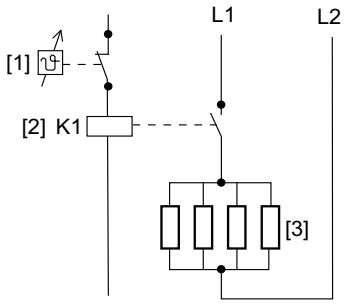

Cable entry: 1xPg16

Observe the electrical characteristics of the control area.
[1] Thermostat
[2] Contactor provided by the customer
[3] Heater
[4] Jumper

The table below shows the connection power of the heaters that can be installed.

Gear unit		P_{inst} 1 heating element		P_{inst} 2 heating elements	
Size	**Variant**	**[kW]**	**[K/h]**	**[kW]**	**[K/h]**
X260	**X2F / X3F / X4F / X3K / X4K / X3T / X4T**	1 x 3.8	4	2 x 3.8	8
X270		1 x 3.8	4	-	-
X280		1 x 4.2	4	-	-
X290		1 x 4.2	3	2 x 4.2	6
X300		1 x 4.2	3	-	-
X310		1 x 5.0	3	2 x 5.0	6
X320		1 x 5.0	3	-	-

K/h = Heating power [Kelvin/hour]
P_{inst} = Power of the installed heater

5.30 Pressure switch /PS

INFORMATION

All gear units with pressure lubrication are equipped with a pressure switch for function monitoring.

The pressure switch is to be connected and integrated into the system so that the gear unit can only be operated with the oil pump building up pressure. A short-term compensation (max 20 s) during startup is permitted.

5.30.1 Dimensions

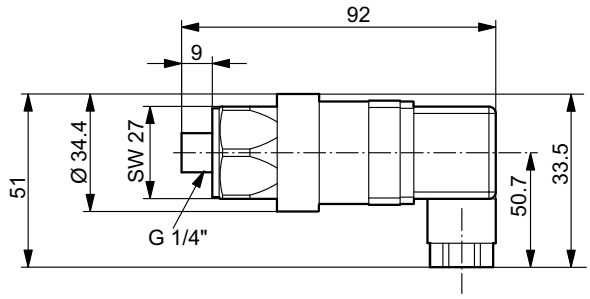

721994635

5.30.2 Electrical connection

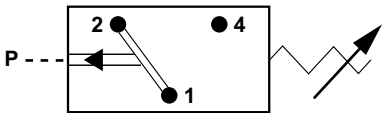

722003723

[1] [2] NC contact
[1] [4] NO contact

5.30.3 Technical data

- Switching pressure 0.5 ± 0.2 bars
- Maximum switching capacity 4 A - $_{AC}$250 V; 4 A - $_{DC}$24 V
- Plug connector DIN EN 175301-803
- The tightening torque for the retaining screw in the back of the plug connector for electrical connection is 0.25 Nm.

5.31 Temperature sensor /PT100

5.31.1 Dimensions

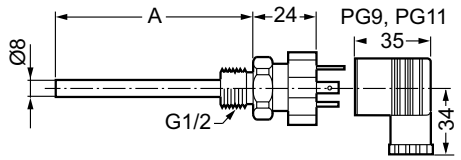

9007199613895435

A [mm]
50
150

5.31.2 Electrical connection

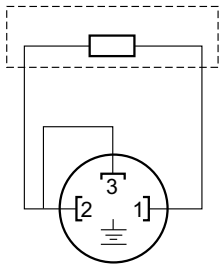

359158539

[1] [2] Resistor element connection

5.31.3 Technical data

- Design with thermometer pocket and changeable measuring insert
- Sensor tolerance [K] ± (0.3 + 0.005 x T), (corresponds to DIN IEC 751 class B),
  T = Oil temperature [°C]
- Plug connector: DIN EN 175301-803 PG9 (IP65)
- The tightening torque for the retaining screw in the back of the plug connector for electrical connection is 0.25 Nm.

5.32 Temperature switch /NTB

5.32.1 Dimensions

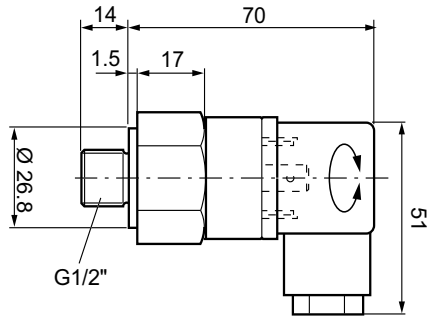

366524939

5.32.2 Electrical connection

To guarantee a long service life and trouble-free functioning, we recommend that you use a relay in the power circuit instead of a direct connection through the temperature switch.

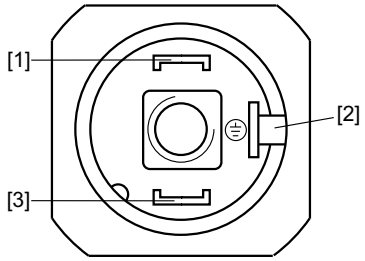

366532491

[1] [3] NC contact (without vacuum)
[2] Grounding terminal 6.3 x 0.8

5.32.3 Technical data

- Trip temperature: 70 °C, 80 °C, 90 °C, 100 °C ± 5 °C
- Contact capacity: 10 A - AC 240 V
- Plug connector: DIN EN 175301-803 PG9 (IP65)
- The tightening torque for the retaining screw in the back of the plug connector for electrical connection is 0.25 Nm.

5.33 Temperature switch /TSK

5.33.1 Dimensions

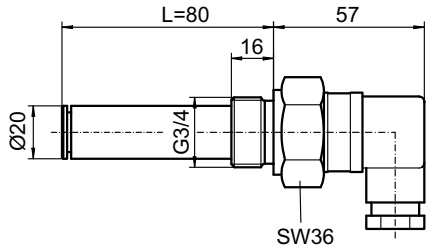

893872779

5.33.2 Electrical connection

To guarantee a long service life and trouble-free functioning, we recommend that you use a relay in the power circuit instead of a direct connection through the temperature switch.

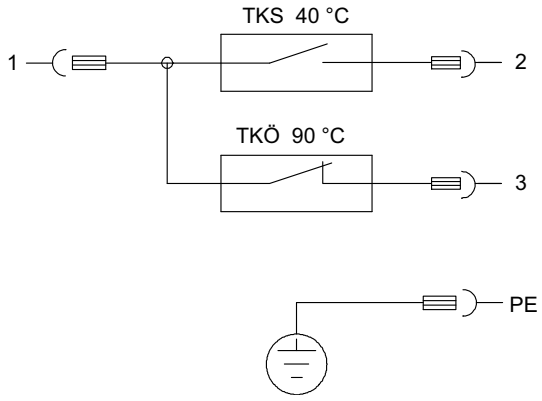

893878155

[1] [2] Switch 60 °C NO contact
[1] [3] Switch 90 °C NC contact
PE Grounding terminal

5.33.3 Technical data

- Switching temperatures: 60 °C and 90 °C
- Contact capacity: 2 A - AC 240 V
- Plug connector: DIN EN 175301-803 PG11 (IP65)
- The tightening torque for the retaining screw in the back of the plug connector for electrical connection is 0.25 Nm.

5.34 Brake

INFORMATION

The brake is not set at the factory.

Observe the manufacturer's operating instructions.

6 Startup

6.1 Important notes



NOTICE

Improper startup may result in damage to the gear unit.

Possible damage to property.

- Observe the following notes.

- Before startup, always check that the oil level is correct. Refer to the unit's nameplate for lubricant fill quantities.

  Check the oil level again after a few operating hours, see chapter "Checking the oil level".
- The most important technical data is provided on the nameplate. Additional data relevant for operation is available in drawings, on the order confirmation or in any order-specific documentation.
- Prior to startup, make sure that monitoring devices (pressure switch, temperature switch etc.) are fully operational.
- As of size X..220 and for X2F..180 to 210, avoid no-load operation independent of the driven machine because operation with a load below the minimum load can damage the rolling bearings of the gear unit.
- After having installed the gear unit, check to see that all retaining screws are tight.
- Make sure that the alignment has not changed after tightening the mounting elements.
- Prior to startup, ensure that rotating shafts as well as couplings are equipped with suitable protective covers.
- If there are any oil drain valves, ensure that they cannot be opened unintentionally.
- If an oil level glass is used for checking the oil level, ensure that it is protected against damage.
- It is essential that there is no open fire or risk of sparks when working on the gear unit.
- Make sure that the gear unit is grounded. Electrical mount-on components, such as motors, frequency inverters, etc. must be grounded separately.
- Protect the gear unit from falling objects.
- If the gear unit is equipped with a fan on the input shaft, check for free air intake within the specified angle.
- Make sure that the external coolant supply is guaranteed for gear units with circulation cooling, water cooling cover and water cooling cartridge.
- When operated in areas with low ambient temperatures, be sure that the gear unit is not below the limit temperature for gear unit startup (page 190). Allow for sufficient warm-up time.
- Gear units with pressure lubrication may only be taken into operation when the pressure switch is connected.
- For gear units with long-term protection: Replace the screw plug at the location indicated on the gear unit with a breather plug (position → see order documents).
- Remove securing devices used for transportation prior to startup.
- Adhere to the safety notes in the individual chapters.

6.2 Shaft end pump /SEP

NOTICE

Improper startup of gear units with pressure lubrication can damage the gear unit.

Possible damage to property.

- Do not start up the gear unit if the pressure switch is not connected.
- It is essential that the gear unit is sufficiently lubricated from the very beginning. Consult SEW-EURODRIVE if the pump does not build up pressure within 20 seconds after the gear unit has been started up.
- A minimum speed of ≥ 400 rpm is required for the shaft end pump to operate properly. If you use variable input speeds (e.g. inverter-controlled drives) or if you intend to change the input speed of a gear unit equipped with a shaft end pump, it is essential that you contact SEW-EURODRIVE.
- An oil heater is mandatory when operating gear units with shaft end pump at low ambient temperatures. For more information, see the chapter "Limit temperature for gear unit startup" (page 190).
- Observe the notes in chapter "Oil filling" (page 87).

6.3 Motor pump /ONP

INFORMATION

Before startup, first read the addendum to the operating instructions "Motor Pump /ONP", which includes the manufacturer's documentation.

6.4 Water cooling cover /CCV

NOTICE

Risk of damage to the system due to performance loss.

Possible damage to property.

- A loss of performance may result from the formation of scale on the inside of the pipe. Refer to chapter "Inspection/Maintenance".

NOTICE

Risk of damage to components caused by aggressive cooling media, such as sea water or brackish water.

Possible damage to property.

- Sea water or brackish water and other caustic fluids must not be used as cooling media for the standard models. Special materials are necessary when using these aggressive cooling media.

After having installed the water cooling cover in the system, it can be taken into operation and operated without taking further preparatory measures. After startup, check the water cooling cover for proper function.

Make the following checks:

- Check the connection points for tightness.
- If necessary, check the valves, fittings, and filters for unrestricted flow and proper functioning.
- Check for proper function of the water cooling cover.

6.5 Water cooling cartridge /CCT



NOTICE

Risk of damage to the system due to performance loss.

Possible damage to property.

- A loss of performance may result from the formation of scale on the inside of the pipe. Refer to chapter "Inspection/Maintenance".



NOTICE

Risk of damage to components caused by aggressive cooling media, such as sea water or brackish water.

Possible damage to property.

- Sea water or brackish water and other caustic fluids must not be used as cooling media for the standard models. Special materials are necessary when using these aggressive cooling media.

After having installed the water cooling cartridge in the system, it can be taken into operation and operated without taking further preparatory measures. After startup, check the water cooling cartridge for proper function.

Make the following checks:

- Check the connection points for tightness.
- If necessary, check the valves, fittings, and filters for unrestricted flow and proper functioning.
- Check for proper function of the water cooling cartridge.

6.6 Oil-water cooler with motor pump for splash lubrication /OWC

INFORMATION

Before installation/assembly, first read the addendum to the operating instructions "Oil-Water Cooler with Motor Pump for Splash Lubricaton /OWC", which includes the manufacturer's documentation.

6.7 Oil-air cooler with motor pump for splash lubrication /OAC

INFORMATION

Before startup, first read the addendum to the operating instructions "Oil-Air Cooler with Motor Pump for Splash Lubricaton /OAC", which includes the manufacturer's documentation.

6.8 Oil-water cooler for pressure lubrication /OWP

INFORMATION

Before startup, first read the addendum to the operating instructions "Oil-Water Cooler for Pressure Lubricaton /OWP", which includes the manufacturer's documentation.

6.9 Oil-air cooler with motor pump for pressure lubrication /OAP

INFORMATION

Before startup, first read the addendum to the operating instructions "Oil-Air Cooler with Motor Pump for Pressure Lubricaton /OAP", which includes the manufacturer's documentation.

6.10 Oil heater /OH

NOTICE

Malfunctioning oil heater when changing the mounting position

Possible damage to property

- Do not change the mounting position without prior consultation with SEW-EURODRIVE, otherwise proper functioning is no longer ensured.

The oil heater comes equipped with cable glands and jumpers. They are included in the delivery of the heating elements and are already installed in the gear unit. The oil heater is connected to the power supply using terminal studs. They do not depend on the size of the heating element and always have an M4 thread. We recommend using RKS4 ring cable lugs with small grommets.

6.10.1 Positioning the thermostat

The required position of the thermostat may vary depending on the installation space.

Proceed as follows to position the thermostat:

1. Open the clamping screws [2].
2. Turn the thermostat to the required position.

   Observe the position of the cable gland. Mount it in such a way that no moisture can enter.
3. Tighten the clamping screws [2].

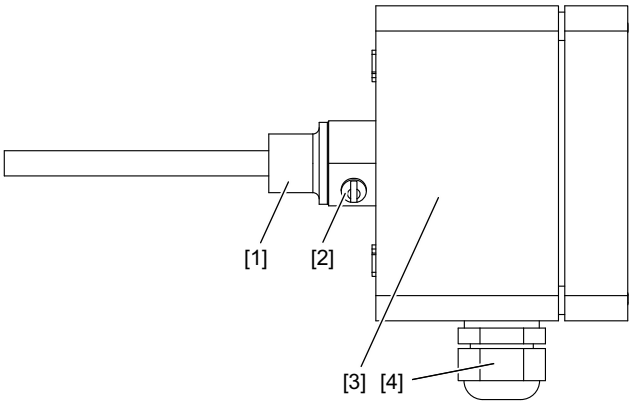

2338432139

[1]	Threaded jacket	[3]	Thermostat
[2]	Clamping screw	[4]	Cable gland

A protective sleeve prevents oil from leaking. The sensor of the thermostat is inserted in the sleeve and is attached via the 2 clamping screws.

6.11 Backstop /BS

NOTICE

Operating the motor in the blocking direction might destroy the backstop.

Possible damage to property

- Do not start up the motor in the blocking direction. Make sure that the motor power supply is correctly attached so that the motor rotates in the required direction. Operating the motor in the blocking direction might destroy the backstop.
- Observe the "Addendum to the operating instructions" when you change the blocking direction.

The direction of rotation is specified as viewed onto the output shaft (LSS):

- Clockwise (CW)
- Counterclockwise (CCW)

The permitted direction of rotation [1] is indicated on the housing.

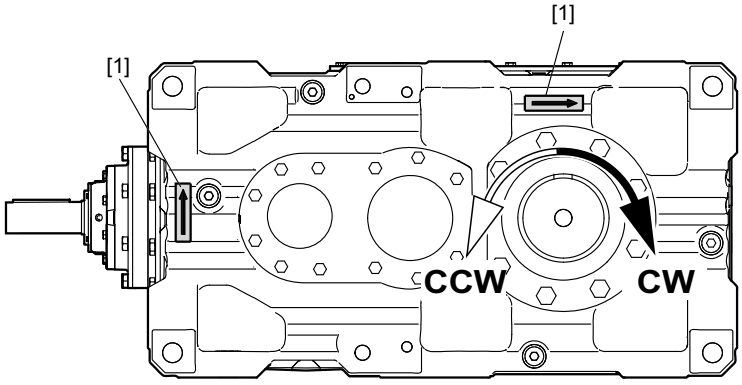

199930635

6.12 Starting up the gear unit at low ambient temperatures

NOTICE

Starting up the gear unit below the permitted minimum temperature may damage the unit.

Possible damage to property.

- Prior to starting up the gear unit, make sure that the oil heater heats up the oil to the temperature specified for "without heater" (page 190).

6.13 Gear unit shutdown/conservation



⚠ WARNING

Risk of crushing if the drive starts up unintentionally.

Severe or fatal injuries.

- De-energize the motor before you start working on the unit.
- Secure the motor against unintended power-up.



INFORMATION

Gear units with water cooling system: disrupt the cooling water supply and drain the water from the cooling circuit. Gear units with oil supply system: Please contact SEW-EURODRIVE.

Additional conservation measures are required if the gear unit is to be shut-down for a longer period. Depending on the location, the ambient conditions, and the lubrication state, even a few weeks of downtime might require conservation measures.

6.13.1 Internal conservation

- **New or hardly used gear units:**
  - For internal conservation, SEW-EURODRIVE recommends the VCI conservation method.
  - Apply the required amount of VCI anti-corrosion agent to the inside of the gear unit (e.g. FUCHS LUBRITECH Anticorit VCI UNI IP-40, www.fuchs-lubritech.com). The amount depends on the free space inside the gear unit. Any existing oil may usually remain in the drive.
  - Replace the breather filter with a screw plug and close the gear unit so that it is air tight. Prior to startup, re-install the breather filter.

- **After longer gear unit operation:**
  - The oil might be contaminated (oil sludge, water, etc.) after long periods of operation. Therefore, drain the oil and thoroughly rinse the inside of the gear unit with new oil prior to conservation. Observe the information in chapter "Changing the oil" in the corresponding operating instructions. The inside of the gear unit can then be conserved as described above.

INFORMATION

For gear units with contactless sealing systems, consult SEW-EURODRIVE.

For gear units without contactless sealing systems, you may also use the oil type indicated on the nameplate to perform the conservation. In this case, the gear unit must be completely filled with clean oil. Replace the breather filter with a screw plug and fill in the oil from the highest point of the gear unit. In order to provide for sufficient conservation, all the gearing and bearing components must be completely covered in oil.

Prior to startup, re-install the breather filter. Observe the information on the nameplate regarding the oil grade and quantity.

6.13.2 Exterior corrosion protection

- Clean the respective surfaces.
- Grease the shaft near the sealing lip to separate the sealing lip of the oil seal and the anti-corrosion agent.
- Apply a wax-based protective coating to shaft ends and unpainted surfaces as external corrosion protection (e.g. Herm. Hölterhoff Hölterol MF 1424, www.hoelterhoff.de).

INFORMATION

Consult the respective supplier regarding the compatibility with the oil that is used and the length of corrosion protection for your particular gear unit version.

Observe the information in chapter "Storage and Transport Conditions" in the corresponding operating instructions. This chapter provides information on the possible storage periods in conjunction with adequate packaging – depending on the storage location.

Prior to re-startup, observe chapter "Startup" in the corresponding operating instructions.

7 Inspection/maintenance

7.1 Preliminary work for inspection and maintenance

Observe the following notes before you start with inspection/maintenance work.



⚠ WARNING

Risk of crushing if the drive starts up unintentionally.

Severe or fatal injuries.

- De-energize the motor before you start working on the unit.
- Secure the motor against unintended power-up.



⚠ WARNING

A customer machine that is not appropriately secured can fall during gear unit installation or removal.

Severe or fatal injuries.

- Safeguard the customer machine against unintentional movement when installing or removing the gear unit.
- Before releasing shaft connections, be sure that there are no active torsional moments present (tensions within the system).



⚠ WARNING

Danger of burns due to hot gear unit and hot gear unit oil.

Serious injury.

- Let the gear unit cool down before you start working on it.
- Carefully remove the oil level plug and the oil drain plug.



NOTICE

Filling in the wrong oil may result in significantly different lubricant characteristics.

Possible damage to property.

- Do not mix different synthetic lubricants and do not mix synthetic with mineral lubricants.



NOTICE

Improper maintenance may result in damage to the gear unit.

Possible damage to property.

- Note the following:

- Strict adherence to the inspection and maintenance intervals is absolutely necessary to ensure safe working conditions.
- When using primary gearmotors, also observe the maintenance notes for motors and primary gear units in the accompanying operating instructions.
- Use only original spare parts according to the delivered spare and wearing parts lists.
- If you remove the inspection cover, you must apply new sealing compound to the sealing surface. Otherwise, the sealing properties of the gear unit might be impaired. Consult SEW-EURODRIVE.
- Prevent foreign particles from entering into the gear unit during maintenance and inspection work.
- Never clean the gear unit with a high-pressure cleaning device. Water might enter the gear unit and the seals might be damaged.
- Replace any brittle seals and gaskets.

- The gear unit must be cleaned in such a way that liquids cannot enter the motor adapter (HSS end) or the mounting flange (LSS end) and accumulate there.
- Perform safety and function tests following all maintenance and repair work.
- For third-party parts, such as cooling systems, observe the separate inspection and maintenance intervals of the manufacturer's documentation.
- Strictly observe the safety notes in the individual chapters.

7.2 Inspection and maintenance intervals

Adhere to the following inspection and maintenance intervals:

Time interval	What to do?

• **Daily**	• Check the housing temperature:
	  • Mineral oil: max 90 ˚C
	  • Synthetic oil: max 100 ˚C
	• Check gear unit noise

• **Monthly**	• Check the gear unit for signs of leakage • Check the oil level
• **After 500 hours of operation**	• First oil change after initial startup
• **Every 6 months**	• Check all screw fittings and pipes for any leaks
• **Every 3000 operating hours, at least every 6 months**	• Check the oil consistency • Fill regreasable sealing systems with grease • For V-belt drives: Check the belt tension and condition of the belt pulleys and belts
• **Depending on the operating conditions, at least every 12 months**	• Check whether retaining screws are tightly secured • Check the condition of the motor pump /ONP, replace filter element if necessary • Check the condition of the oil-water cooler /OWC (see addendum to the operating instructions) • Check the condition of the oil-air cooler /OAC (see addendum to the operating instructions) • Check the condition of the oil-water cooler /OWP, replace filter element if necessary (see addendum to the operating instructions) • Check the condition of the oil-air cooler /OAP, replace filter element if necessary (see addendum to the operating instructions) • Clean the oil filter, replace filter element if necessary • Check the condition of the water cooling cartridge /CCT • Check the condition of the water cooling cover /CCV • Check the breather valves, replace them if necessary • Check the alignment of the input and output shaft • Check the condition and tightness of all the rubber tubes (aging effects)
• **At least every 3 years depending on the operating conditions (see figure on next page)**	• Change mineral oil
• **At least every 5 years, depending on the operating conditions (see figure on next page)**	• Change synthetic oil

Time interval	What to do?

• **Varying (depending on external factors)**	• Check the installed hose pipes
	• Clean the gear unit housing surface and fan
	• Touch up or renew the surface/anticorrosion coating
	• Replace backstop
	The backstop might wear off when operated below lift-off speed. This is why you should consult SEW-EURODRIVE for defining the maintenance intervals for:
	  • Speed on input shaft < 950 rpm
	  • See backstop, chapter 4
	• Check built-in cooler (such as water cooling cover/cartridge) for deposits
	• Check the oil heater (at same time as the oil change):
	  • Are all connection cables and terminals tightened securely and free from corrosion?
	  • Clean encrusted heating elements, replace if necessary

7.3 Lubricant change intervals

Change the oil more frequently when using special designs subject to more severe/aggressive ambient conditions.

INFORMATION

Mineral CLP lubricants and synthetic polyalphaolefin-based (PAO) lubricants are used for lubrication. The synthetic lubricant CLP HC (according to DIN 51502) shown in the following illustration corresponds to the PAO oils.

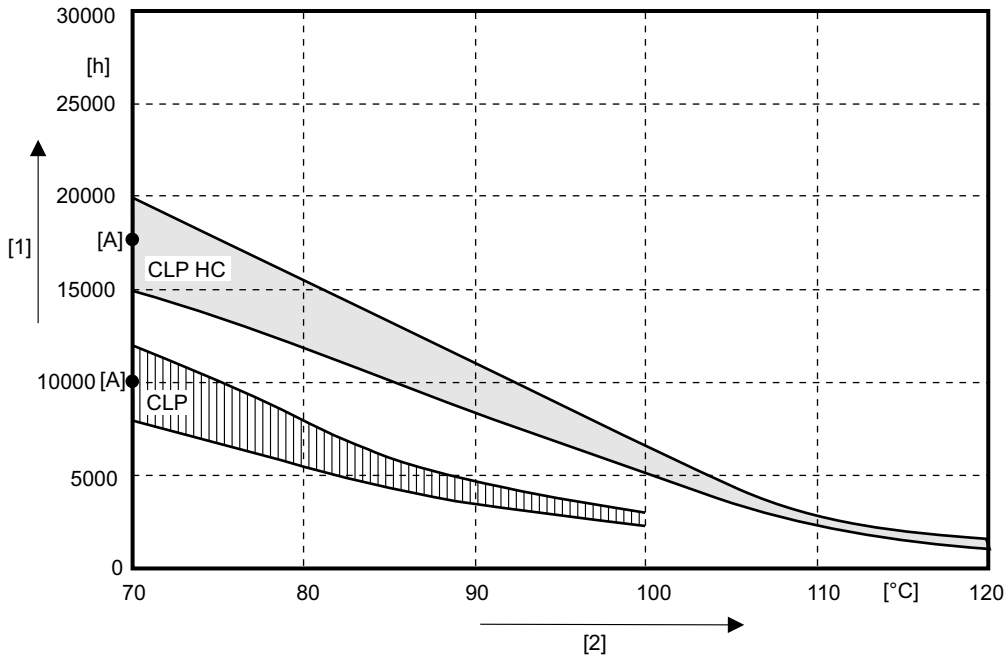

[1] Operating hours
[2] Sustained oil bath temperature
[A] Average value per oil type at 70 °C

INFORMATION

SEW-EURODRIVE recommends to regularly analyze the gear unit oil (see chapter 7.5) to optimize the lubrication change intervals.

7.4 Checking the oil level

7.4.1 General information

Observe the following information:

NOTICE

Improper checking of the oil level may result in damage to the gear unit.

Possible damage to property.

- Check the oil level only when the gear unit is at standstill.
- Check the oil level again after a few operating hours.
- When the gear unit is equipped with an oil dipstick and an oil sight glass, refer to the oil dipstick to check the oil level. The oil level of the oil sight glass is only a guide value.
- For gear units in fixed and variable pivoted mounting position, observe the notes in chapter "Procedure for pivoted mounting positions".
- Elements for controlling the oil level, oil drain, and oil fill openings are indicated by safety symbols on the gear unit.

7.4.2 Standard procedure

Oil dipstick

1. Observe the notes in chapter "Preliminary work for inspection/maintenance" (page 212).
2. Unscrew the oil dipstick and remove it.
3. Clean the oil dipstick and re-insert it by turning it hand-tight into the gear unit up to the stop.
4. Remove the oil dipstick and check the oil level.

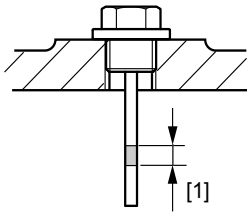

460483852

[1] The oil level must be within this range

5. Proceed as follows if the oil level is too low:
   - Open the oil fill plug.
   - Fill in new oil of the same type via the oil fill plug up to the mark [1].
   - Check the oil level again.
6. Screw in the oil dipstick.

Oil level glass

1. Observe the notes in chapter "Preliminary work for inspection/maintenance" (page 212).
2. Check the oil level as shown in the following figure.

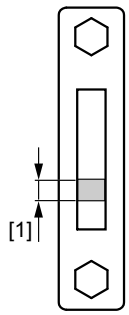

460483724

[1] The oil level must be within this range

3. Proceed as follows if the oil level is too low:
   - Open the oil fill plug.
   - Fill in new oil of the same type via the oil fill plug up to the mark [1].
   - Check the oil level again.
4. Screw in the oil fill plug.

Oil sight glass

1. Observe the notes in chapter "Preliminary work for inspection/maintenance" (page 212).
2. Check the oil level on the oil sight glass as shown in the following figure.

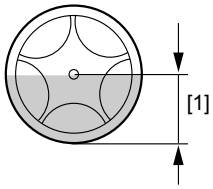

460483980

[1] The oil level must be within this range

3. Proceed as follows if the oil level is too low:
   - Open the oil fill plug.
   - Fill in new oil of the same type via the oil fill plug up to the mark [1].
   - Check the oil level again.
4. Screw in the oil fill plug.

7.4.3 Procedure for gear units with oil expansion tank /ET

During operation, any oil level below or above the level specified by SEW-EURODRIVE is permitted as long as there is oil in the expansion tank [3] and the expansion tank does not overflow. However, to provide for adequate lubrication of the gear unit in any operating state, you have to check the oil level accurately on a regular basis. This can only be carried out properly within a certain temperature range.

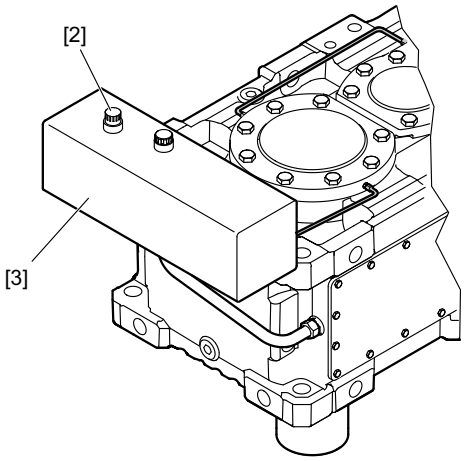

5415136011

1. Observe the notes in chapter "Preliminary work for inspection/maintenance" (page 212).
2. Switch off the gear unit and allow it to cool down until the temperature is between 10 °C and 40 °C.
3. Unscrew the oil dipstick [2] and remove it from the oil expansion tank [3].
4. Clean the oil dipstick [2] and re-insert it by turning it hand-tight into the oil expansion tank [3] up to the stop.
5. Remove the oil dipstick [2] and check the oil level. The oil level must be within the range specified by SEW-EURODRIVE.

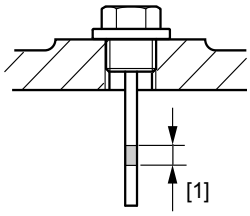

460483852

[1] The oil level must be within this range

6. Proceed as follows if the oil level is too low:
   - Open the respective oil fill plug [2].
   - Fill in new oil of the same type via the oil fill plug up to the mark.
   - Check the oil level again.
7. Screw in the oil dipstick.

7.4.4 Notes on the procedure for fixed and variabel pivoted mounting positions

Observe the information on the nameplate and in the order documents.

Fixed pivoted mounting positions

Procedure

Check the oil level in the fixed, intended position. Observe the notes in chapter "Standard procedure" (page 216).

The following figure shows an example of how to check the oil level.

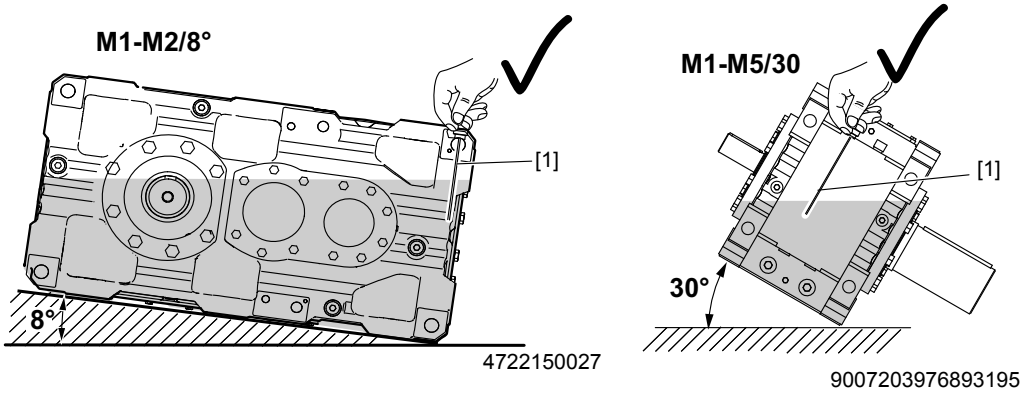

[1] Oil dipstick

Oil

Variable pivoted mounting positions

Procedure

Before checking the oil level of gear units with variable pivoted mounting position, position the gear unit in the mounting position defined in the order documents. Observe the notes in chapter "Standard procedure" (page 216).

The following figure shows an example of how to check the oil level.

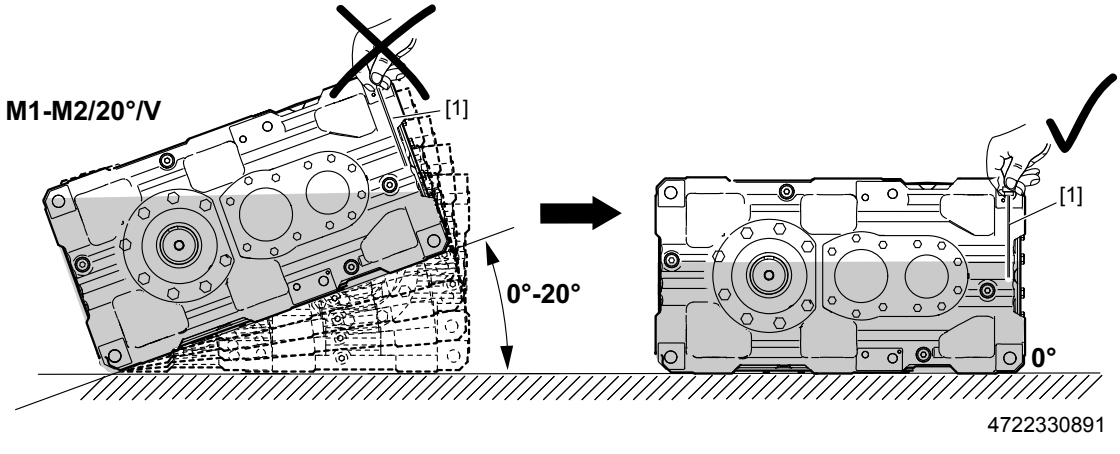

[1] Oil dipstick

Oil

Information sign

Observe the additional **information sign on the gear unit**. Check the oil level in the test mounting position specified on the information sign.

The following figure shows an example of the information sign for test mounting position 0°

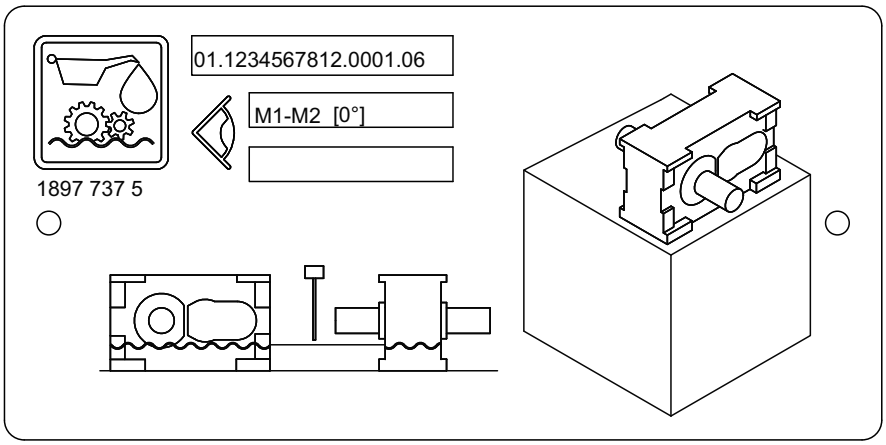

5689406987

The following figure shows an example of the information sign for test mounting position 20°

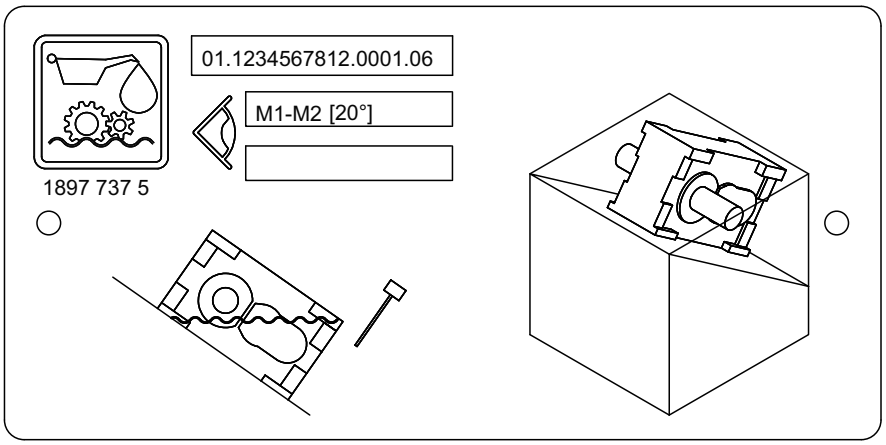

5689420683

Combination of fixed and variable pivoted mounting positions

Procedure

Observe the following procedure when combining **fixed and variable pivoted mounting position**.

Before checking the oil level of gear units with variable/fixed pivoted mounting position, position the gear unit in the mounting position defined in the order documents. Observe the notes in chapter "Standard procedure" (page 216).

The following figure shows an example of how to check the oil level.

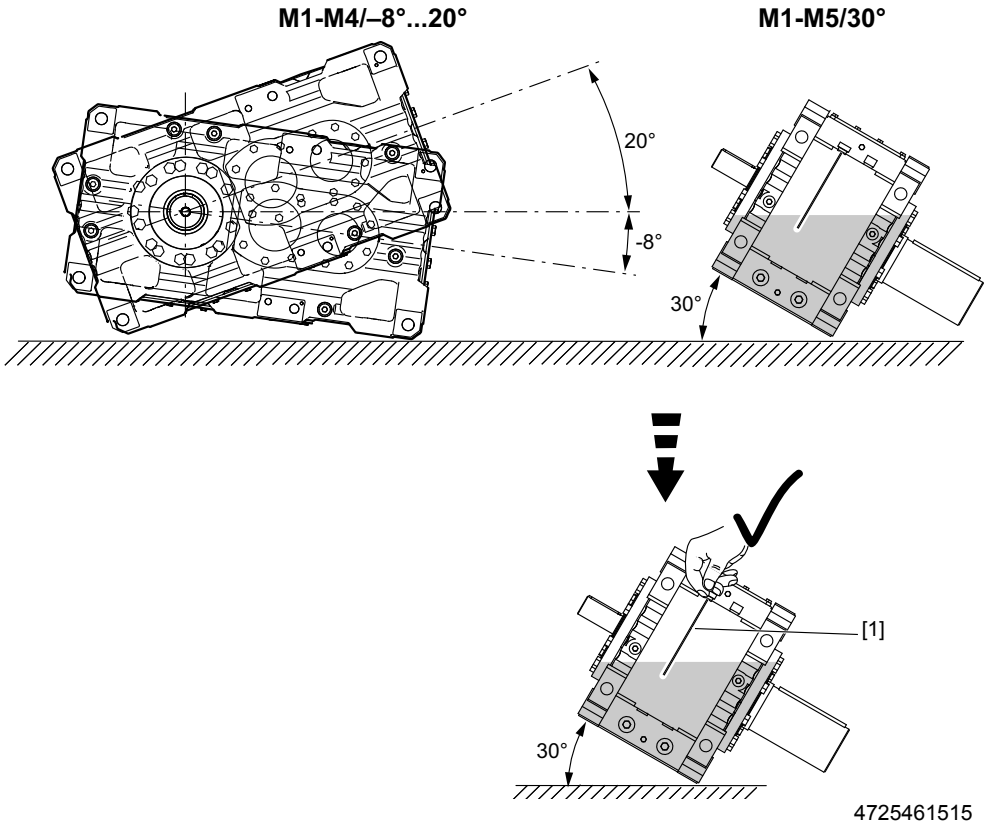

[1] Oil dipstick

Oil

Information sign

Observe the additional information sign on the gear unit. Check the oil level in the test mounting position specified on the nameplate.

Following an example of the information sign for test mounting position 30°

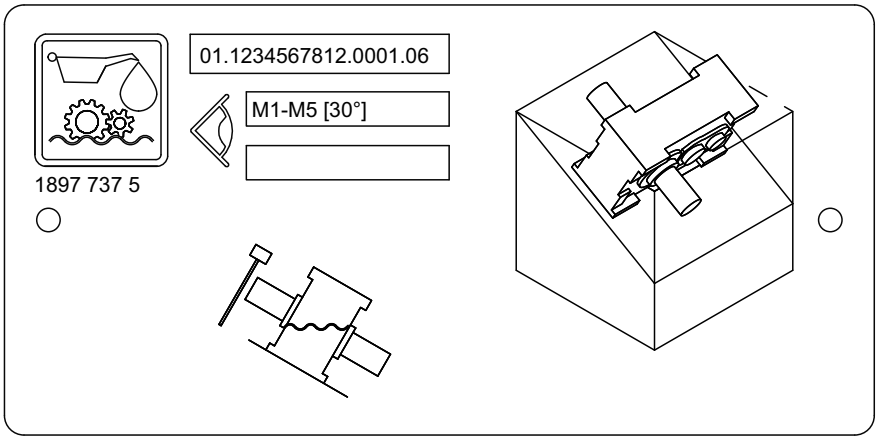

5689445387

Following an example of the information sign for test mounting position 30°

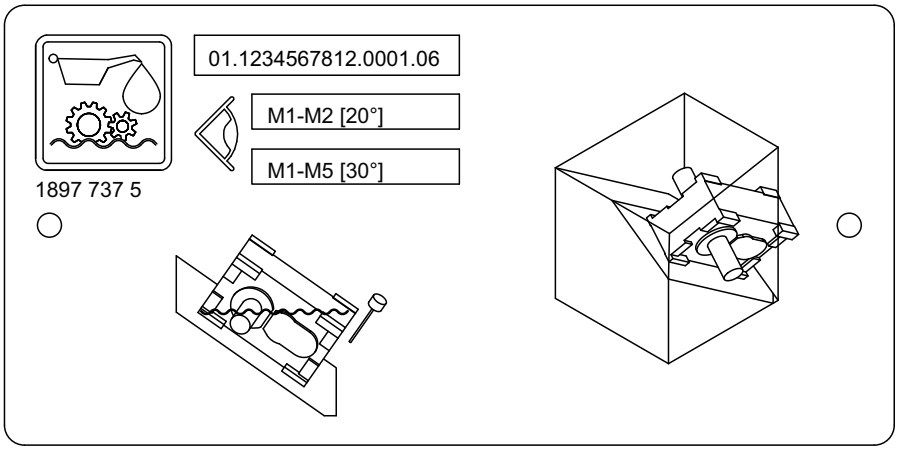

5689447563

7.5 Checking the oil consistency

1. Observe the notes in chapter "Preliminary work for inspection / Maintenance work" (page 212).
2. Determine the oil drain position and place a container underneath.
3. Slowly open the oil drain and drain some oil.
4. Close the oil drain valve.
5. Check the oil consistency:
   - Check the drained oil for appearance, color, contamination.
   - If the oil sample is severely contaminated (e.g. water, color, dirt), consult a specialist to find out the cause.
   - For more detailed information on checking the oil for water content and viscosity, contact your lubricant manufacturer.

7.6 Changing the oil

7.6.1 Information



⚠ WARNING

Risk of burns due to hot gear unit and hot gear unit oil.

Serious injury.

- Remove the oil level plug and the oil drain plug with great care.



NOTICE

Improper oil change may result in damage to the gear unit.

Possible damage to property.

- Observe the following notes.

- Perform the oil change quickly after you have switched off the gear unit to prevent solids from settling. Drain the oil while it is still warm. Avoid oil temperatures well above 50 °C.
- Always fill the gear unit with the same oil grade as before. Mixing oils of different grades and/or manufacturers is not permitted. Especially synthetic oils may not be mixed with mineral oils or other synthetic oils. When switching from mineral oil and/or when switching from synthetic oil of one basis to synthetic oil of another basis, thoroughly flush the gear unit with the new oil grade.
- Refer to the lubricant table to determine which oil of the various lubricant manufacturers can be used.
- Information such as the oil grade, oil viscosity and required oil quantity is given on the nameplate of the gear unit. The oil quantity specified on the nameplate is an approximate quantity. The mark on the oil level glass or oil dipstick is the decisive indicator for the correct oil level.

  The oil fill quantity is higher when additional attachments are mounted to the gear unit, such as an oil supply system. In this case, observe the respective SEW operating instructions: Oil supply system.
- When changing the oil, flush the gear unit interior thoroughly with oil to remove oil sludge, oil residue, and abrasion. Use the same oil grade for this purpose as for operating the gear unit. Fill in fresh oil only after all residues have been removed.
- For the position of the oil level plug, oil drain plug and breather plug, refer to the order documents.
- An oil level above the max marking might indicate that foreign liquids (e.g. water) have entered. An oil level below the min marking might indicate a leakage. Find out and eliminate the cause before you fill in new oil.
- Empty accessories (e.g. filters) and piping if required.
- Replace any damaged seals of the oil drain plug.
- If present, clean the magnetic oil drain plugs and the oil dipstick with magnet tip.

- Empty the oil-bearing system of gear units with circulation lubrication and oil supply systems according to the manufacturer's maintenance instructions.
- Elements for controlling the oil level, oil drain, and oil fill openings are indicated by safety symbols on the gear unit.
- Use a funnel to fill the oil (max. filter mesh 25 µm).
- Remove any dripping oil immediately with oil binding agent. Dispose of the used oil in accordance with applicable regulations.

7.6.2 Basic gear unit

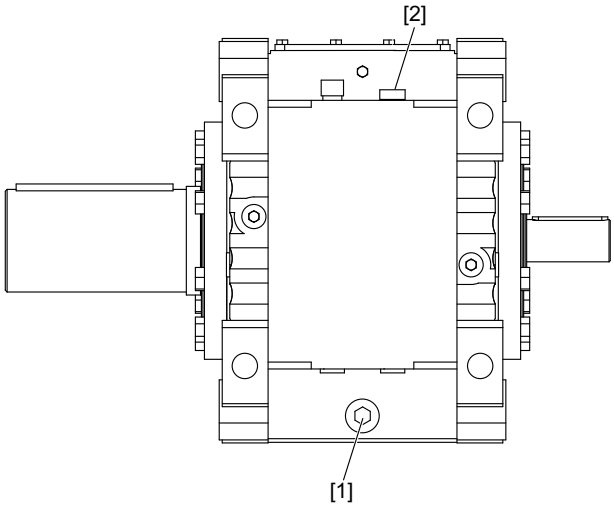

4605382667

1. Observe the notes in chapter "Preliminary work for inspection/maintenance" (page 212).
2. Place a suitable container underneath the oil drain [1].
3. Remove the oil fill plug(s) [2] / breather valve.
4. Open the oil drain valve [1] and drain all the oil into the container.
5. Close the oil drain valve [1].
6. Fill in new oil of the same grade through the oil filling hole [2].
   - Use a funnel to fill the oil (max. filter mesh 25 µm).
   - Pour in the oil quantity in accordance with the specification on the nameplate. The oil quantity specified on the nameplate is an approximate value.
   - Check the oil level according to chapter "Checking the oil level".
7. If present, insert the oil fill plug(s) [2] / breather valve and the oil dipstick.

7.6.3 Gear units with oil expansion tank /ET

The following figure shows an example of a gear unit with oil expansion tank in mounting position M5.

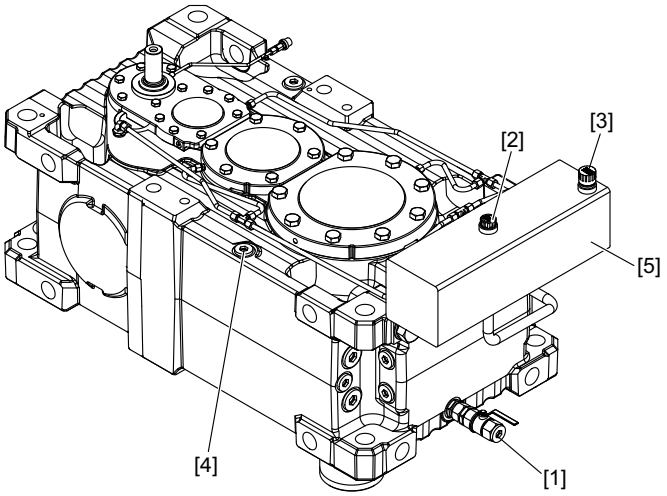

3321724299

1. Remove the oil drain plug(s) and open the oil drain valve [1].
   - **INFORMATION** The oil drains faster if the upper closing elements, such as oil dipstick [2], breather valve [3] or screw plugs [4] are removed and when the oil change is performed when the gear unit is warm.
2. Place a suitable container underneath the oil drain plug(s) or the oil drain valve [1].
3. Drain all the oil into the container.
4. Close the oil drain plug(s) or oil drain valve [1].
5. Open the oil fill plugs. Observe the mounting position and the following notes.
   - Mounting positions M1 and M3:

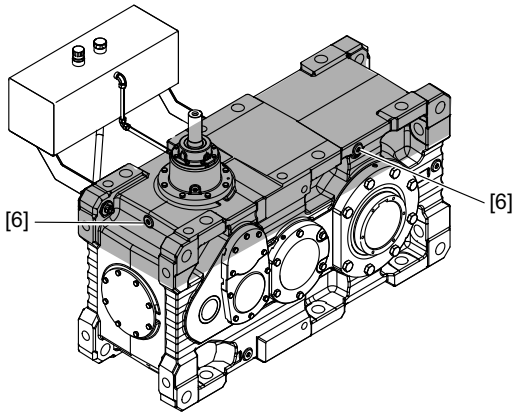

9007202583734923

Open at least one of the screw plugs [6] located on the side in the upper fifth (marked gray) of the gear unit housing.

- Mounting positions M2 and M4:

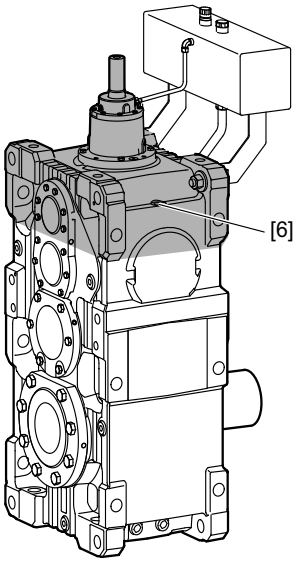

9007202581407371

Open at least one of the screw plugs [6] on the top or at least one of the screw plugs [6] located on the side in the upper fifth (marked gray) of the gear unit housing.

- Mounting positions M5 and M6:

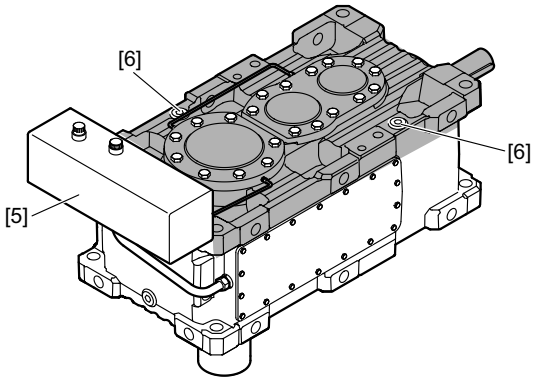

3242556939

Open all accessible screw plugs [6] on the top and all accessible screw plugs [6] located on the side in the upper fifth (marked gray) of the gear unit housing.

6. Fill in oil of the same type through one of the housing openings [6] or the oil expansion tank [5]. If oil leaks from an opening, close the opening and keep filling the gear unit until the specified oil level is reached in the oil expansion tank [5].
   - **INFORMATION**
     - Preheat the oil to max. 40 °C to accelerate the filling process.
     - You can also use a pump to fill the gear unit.
     - During the filling process, the oil level in the oil expansion tank [5] must never increase to a point that oil leaks from the expansion tank [5] into the breather pipes.

- ⚠ **NOTICE** Oil leaking from the expansion tank [5] into the breather pipes may result in inadequate venting and an insufficient oil filling which could cause damage to the gear unit.

  Possible damage to property.

  – Wait at least 15 minutes. Then check the oil level again. Fill in more oil if required. Repeat this procedure until the oil level no longer decreases even after at least 15 minutes.

7. Close all openings [6] of the gear unit housing and the oil expansion tank [5].
8. Check the breather valve [3] for proper functioning before you install it.
9. Screw in the oil dipstick [2].
10. Start up the gear unit.
11. Until the gear unit has reached the operating temperature, check the oil level at least every 30 minutes and fill in more oil if required.
12. Allow the gear unit to cool down to a temperature between 10 °C and 40 °C and check the oil level again. Fill in more oil if required.

- **INFORMATION** Usually, trapped air escapes from the gear unit during the initial hours of operation so that you have to fill in more oil.

7.6.4 Gear units with shaft end pump /SEP



INFORMATION

- Read the manufacturer's documentation first before beginning inspection/maintenance work.
- Observe the notes in chapter "Preliminary work for inspection/maintenance" (page 212).
- Observe chapter "Installation/Assembly".

7.7 Checking and cleaning the breather plug



NOTICE

Improper cleaning of the breather may damage the gear unit.

Possible damage to property.

- Prevent foreign particles from entering into the gear unit when performing the following work.

1. Observe the notes in chapter "Preliminary work for inspection / Maintenance work" (page 212).
2. Remove any deposits near the breather plug.
3. Replace clogged breather plugs with new ones.

7.8 Refilling grease



⚠ WARNING

Risk of crushing due to rotating parts.

Severe or fatal injuries.

- Make sure to provide for sufficient safety measures for relubrication.

Observe the notes in chapter "Preliminary work for inspection/maintenance" (page 212).

Regreasable sealing systems may be filled with lithium soap grease (page 252). Use moderate pressure to force about 30 g of grease into each lubrication point until new grease leaks out of the sealing gap.

Used grease, including contaminants and sand, is in this way pressed out of the sealing gap.



INFORMATION

Immediately remove the old grease that leaked out.

7.9 Relubricating the bearing for drywell sealing systems

⚠ WARNING

Risk of crushing due to rotating parts.

Severe or fatal injuries.

- Make sure to provide for sufficient safety measures for relubrication.

NOTICE

High pressure presses out the grease between the sealing lip and the shaft. The sealing lip might be damaged or slip, grease might seep into the workflow.

Possible damage to property.

- Fill the grease while the gear unit is running by carefully pressing in the required quantity.

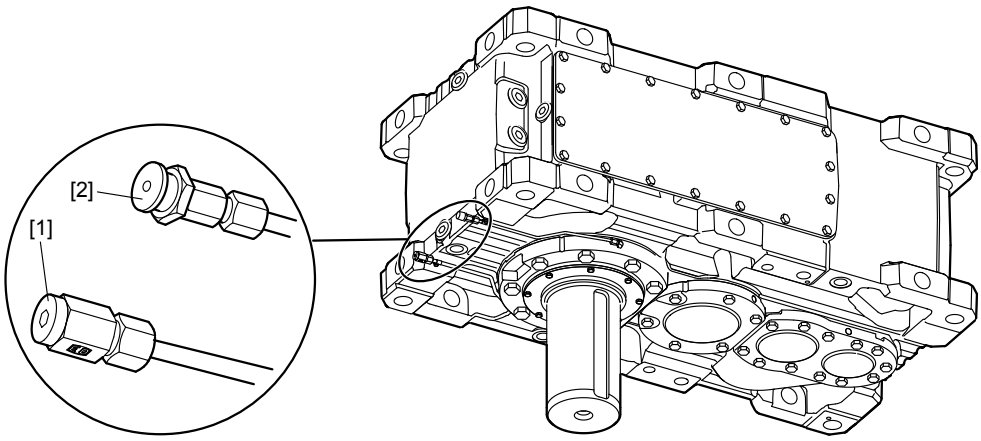

9007199993199627

1. Observe the notes in chapter "Preliminary work for inspection/maintenance" (page 212).
2. Open the grease draining pipe [1] so that old excess grease can escape.
3. Fill in the grease via the flat grease nipple (DIN 3404 A G1/8) [2]. Lubricant quantities according to the following table. For lubricants you can use, refer to chapter "Sealing greases" (page 252).

Size	Amount of grease	Size	Amount of grease	Size	Amount of grease
X120	50	**X180-X190**	110	**X260**	300
X130-X140	60	**X200-X210**	200	**X270-X280**	450
X150	70	**X220-X230**	200	**X290-X300**	400
X160-X170	90	**X240-X250**	300	**X310-X320**	550

4. Close the grease drain pipe [1].

INFORMATION

Immediately remove the old grease that leaked out.

7.10 Motor pump /ONP

INFORMATION

- Before inspection/maintenance, first read the addendum to the operating instructions "Motor Pump /ONP", which includes the manufacturer's documentation.
- Observe the notes in chapter "Preliminary work for inspection/maintenance" (page 212).

7.11 Shaft end pump /SEP

Observe the procedure described in chapter "Installation/Assembly" and the manufacturer's documentation.

7.12 Fan /FAN

1. Observe the notes in chapter "Preliminary work for inspection/maintenance" (page 212).
2. Remove the fan guard.
3. Remove any dirt from the fan wheel, fan guard and protective grid using a hard brush, for example.
4. Before restarting the fan, make sure the fan guard is mounted properly. The fan must not touch against the fan guard.

7.13 Water cooling cover /CCV

7.13.1 Safety notes



⚠ WARNING

Danger of burns due to media under pressure and hot component parts.

Serious injury.

- Unpressurize all systems before carrying out any disassembly work on the water cooling cover. Safeguard the systems according to the applicable accident prevention regulations.
- Risk of burns when touching hot parts (such as supply lines) of the water cooling cover. Let the parts cool down before you remove the water cooling cover and the supply lines.



NOTICE

Risk of damaging components of the water cooling cover.

Possible damage to property.

- For information on suitable cleaning agents, consult SEW-EURODRIVE.
- Properly vent the water cooling cover and the connected systems before taking them into operation again.



NOTICE

Risk of contamination of the medium.

Possible damage to property.

- Experience has shown that it is not possible to remove the cleaning agent without any residues. It is therefore important that you select only cleaning agents that are compatible with the medium.



NOTICE

Risk of destroying components of the water cooling cover.

Possible damage to property.

- To exclude damage resulting from improper handling of the functional components, always contact SEW-EURODRIVE before you use other comparable, aggressive cleaning agents.



NOTICE

Risk of contamination due to drained media.

Possible damage to property.

- Drain media in such a way that it is not discharged into the soil or sewage system. Drain media in suitable containers and dispose of them according to the applicable environmental regulations.

7.13.2 Removal

1. Observe the notes in chapter "Preliminary work regarding inspection/maintenance (page 212)".
2. Remove the cooling water inflow and return lines from the water cooling cover.
3. Open the inspection cover.
4. Carefully remove the water cooling cover and the gasket.
5. Check the water cooling cover for deposits.

   Clean light dirt on the water cooling cover with a suitable cleaning agent. If heavily soiled, replace the water cooling cover with a new one. Consult SEW-EURODRIVE.
6. Insert the water cooling cover into the gear unit housing.
7. Apply Loctite® 5188 over the entire edge of the cooling cover.
8. Insert the gasket.
9. Put the inspection cover back on and align it.
10. Reinsert the screws and tighten them in 2 goes starting from the inside.

    Observe chapter "Tightening torques".
11. Re-connect the water cooling inflow and return pipes to the water cooling cover.

7.14 Water cooling cartridge /CCT

INFORMATION

Do not carry out any work on the pipe bundle of the water cooling cartridge unless in case of an emergency. Contact SEW-EURODRIVE in that case. Analyze the situation and report the failure symptoms.

7.14.1 Maintenance intervals

The service life of the water cooling cartridge depends to a large degree on the quality of the media and their substances. The operator is responsible for specifying the maintenance intervals. Use the performance parameters and power rating determined during operation to define the maintenance intervals.

Specify the maintenance intervals in such a way that a performance loss of the water cooling cartridge does not pose a hazard to the operation of the system.

7.14.2 Cleaning

Use the performance parameters and power rating determined during operation to define the cleaning intervals. Specify the intervals in such a way that a performance loss of the water cooling cartridge does not pose a hazard to the operation of the system.

Safety notes



⚠ WARNING

Danger of burns due to media under pressure and hot component parts.

Serious injury.

- Unpressurize all systems before carrying out any disassembly work on the water cooling cartridge. Safeguard the systems according to the applicable accident prevention regulations.
- Risk of burns when touching hot parts (such as supply lines) of the water cooling cartridge. Let the parts cool down before you remove the water cooling cartridge and the supply lines.



⚠ WARNING

Cleaning the water cooling cartridge with cleaning agents such as hydrochloric acid and comparable cleaning agents can pose a risk of chemical burn to parts of the body and the eyes if the applicable work safety regulations are not adhered to.

Serious injury.

- Always adhere to the applicable work safety regulations when handling cleaning agents. Wear protective clothing, protective gloves and, if necessary, safety goggles and breathing protection when working with aggressive cleaning media.



NOTICE

Risk of destroying components of the water cooling cartridge.

Possible damage to property.

- To exclude damage resulting from improper handling of the water cooling cartridge, always contact SEW-EURODRIVE before you use other comparable, aggressive cleaning agents.



NOTICE

Risk of contamination of the medium.

Possible damage to property.

- According to experience, it is not possible to remove the cleaning agent without any residues. It is therefore important that you select only cleaning agents that are compatible with the medium.



NOTICE

Risk of damaging components of the water cooling cartridge.

Possible damage to property.

- Properly vent the water cooling cartridge and the connected systems before taking them into operation again.



NOTICE

Risk of contamination due to drained media.

Possible damage to property.

- Drain media in such a way that it is not discharged into the soil or sewage system. Drain media in suitable containers and dispose of them according to the applicable environmental regulations.

Removal

1. Observe the notes in chapter "Preliminary work for inspection/maintenance" (page 212).
2. Unpressurize the water cooling cartridge and the connected system pipes. Shut them off with the corresponding valve.
3. Before disassembly (page 224), drain all the gear unit oil.
4. Completely drain the cooling medium using the drain screws and/or drains provided for this purpose.
5. Loosen the water cooling cartridge by applying torque only to the head of the hex screw on the tube plate and remove the water cooling cartridge.
6. Remove the flat gasket. Remove any gasket residues from the sealing surface.
   - ⚠**NOTICE** Be careful not to damage the sealing surface.

     Possible damage to property.

     – Damage to the sealing surfaces can result in leakage.

7. Clean the water cooling cartridge.
8. Insert a new gasket and make sure it is seated properly. If present, replace the O-ring.
9. Apply LOCTITE® 577 to 2 threads and screw on the water cooling cartridge and tighten the hex head screw by applying torque only to the head of the screw on the tube plate using an adequate tool.
10. Re-connect the cooling water supply and return pipes to the water cooling cartridges.
11. Fill new oil of the same type as the old oil through the oil fill plug (if you want to change the oil type, contact our customer service first).
    - Use a funnel to fill the oil (max. filter mesh 25 µm).
    - Pour in the oil quantity in accordance with the specification on the nameplate. The oil quantity specified on the nameplate is an approximate value.
    - Check the oil level.
12. Before starting the system again, vent the lines.

Cleaning the inside of the water cooling cartridge

Observe the notes in the previous chapter.



NOTICE

Risk of corrosion due to scratches.

Possible damage to property.

- Scratches on the inner surface of the pipe bundle can result in increased corrosion. Use a brush with soft bristles to clean the inner surface of the pipe bundle.



NOTICE

Risk of damaging components of the water cooling cartridge.

Possible damage to property.

- For information on suitable cleaning agents, consult SEW-EURODRIVE.

We recommend that you take the following measures for cleaning:

- To remove scale deposits from the inside of pipes, use a mixture of 50% hydrochloric acid with inhibitors and 50% water.
- To clean the inside of the pipe bundle, you can use a brush if the pipe diameter is > 5 mm. Make sure you use a brush with soft bristles to prevent the surface from pipe walls from being scratched.
- Contact SEW-EURODRIVE if you want to use other cleaning agents to remove scale deposits.
- After cleaning, make sure all cleaning agents have been removed completely from the pipes before taking the water cooling cartridge into operation again.

7.15 Oil-water cooler for splash lubrication /OWC

INFORMATION

- Before inspection/maintenance, first read the addendum to the operating instructions "Oil-Water Cooler for Splash Lubricaton /OWC", which includes the manufacturer's documentation.
- Observe the notes in chapter "Preliminary work for inspection/maintenance" (page 212).

7.16 Oil-air cooler for splash lubrication /OAC

INFORMATION

- Before inspection/maintenance, first read the addendum to the operating instructions "Oil-Air Cooler for Splash Lubricaton /OAC", which includes the manufacturer's documentation.
- Observe the notes in chapter "Preliminary work for inspection/maintenance" (page 212).

7.17 Oil-water cooler for pressure lubrication /OWP

INFORMATION

- Before inspection/maintenance, first read the addendum to the operating instructions "Oil-Water Cooler for Pressure Lubricaton /OWP", which includes the manufacturer's documentation.
- Observe the notes in chapter "Preliminary work for inspection/maintenance" (page 212).

7.18 Oil-air cooler for pressure lubrication /OAP

INFORMATION

- Before inspection/maintenance, first read the addendum to the operating instructions "Oil-Air Cooler for Pressure Lubricaton /OAP", which includes the manufacturer's documentation.
- Observe the notes in chapter "Preliminary work for inspection/maintenance" (page 212).

7.19 Oil heater /OH

⚠ WARNING

Danger of electric shock

Severe or fatal injuries

- De-energize the oil heater before you start working on the unit.
- Secure the oil heater against unintended power-up.

1. Observe the notes in chapter "Preliminary work for inspection/maintenance" (page 212).
2. Before disassembling the oil heater, drain the oil completely (page 224).
3. Remove the oil heater.
4. Clean the tubular heating elements with solvent, replace defective heating elements.
   - **NOTICE** Improper cleaning of the heater may damage the heating elements.

     Possible damage to property.

     – Do not destroy the heating elements by scratching or scraping.
5. Apply LOCTITE® 577 to 2 threads and screw on the oil heater and tighten the hex head screw.
6. Screw in the oil drain plug again.
7. Fill new oil of the same type as the old oil through the oil fill plug (if you want to change the oil type, contact our customer service first).
   - Use a funnel to fill the oil (max. filter mesh 25 µm).
   - Pour in the oil quantity in accordance with the specification on the nameplate. The oil quantity specified on the nameplate is an approximate value.
   - Check to see that the oil level is correct, refer to chapter "Checking the oil level".
8. Connect the oil heater.

7.20 Split housing

If the split gear unit housing is divided during maintenance, be sure that:

- the parting lines are sealed again carefully, and
- the screw connections are re-tightened using the tightening torques given in section "tightening torques" (page 83).

8 Lubricants

8.1 Lubricant selection



NOTICE

Selecting improper lubricants may damage the gear unit.

Possible damage to property.

- Note the following:

- The oil viscosity and type (mineral/synthetic) that are to be used are determined by SEW-EURODRIVE specifically for each order. This information is noted in the order confirmation and on the gear unit's nameplate.

  You must contact SEW-EURODRIVE in case of a deviation from this specification.

  This lubricant recommendation in no way represents a guarantee as to the quality of the lubricant delivered by each respective supplier. Each lubricant manufacturer is responsible for the quality of its product.
- Ensure that the gear unit is filled with the correct oil grade and quantity before startup. You can obtain the corresponding information from the gear unit nameplate and the lubricant table in the following chapter.
- Do not mix different synthetic lubricants and do not mix synthetic with mineral lubricants.
- Check the compatibility of the greases and oils used.

8.2 Lubricant table



NOTICE

Selecting improper lubricants may damage the gear unit.

Possible damage to property.

- Contact SEW-EURODRIVE if you operate the unit under extreme conditions, such as cold, heat, or if the operating conditions have changed since project planning.

The lubricant table shows the permitted lubricants for SEW-EURODRIVE industrial gear units. Consider the used abbreviations, meaning of shading and notes.

CLP = Mineral oil
CLP HC = Synthetic polyalphaolefin
E = Ester oil (water hazard classification 1)
= Mineral lubricant
= Synthetic lubricant

3) = Lubricants may only be used if service factor $F_S \geq 1.3$
4) = Take into account critical startup behavior at low ambient temperatures
6) = Ambient temperature

= Lubricant for the food industry (food grade oil)

= Biodegradable oil (lubricant for agriculture, forestry, and water management)

Lubricants
Lubricant table

6) °C	DIN (ISO)	ISO,NLGI	Mobil®	Shell	bp	KLÜBER LUBRICATION	TEXACO	Castrol Tribol	Castrol Optimol	FUCHS	Q8	TOTAL
-10 … +40	CLP CC	VG 320	Mobilgear 600XP 320	Shell Omala F 320	BP Energol GR-XP-320	Klüberoil GEM 1-320 N	Meropa 320	Alpha SP 320 Tribol 1100/320	Optigear BM 320	Renolin CLP 320 Plus Renolin High Gear 320	Goya NT 320	Carter EP 320
3) -20 … +20	CLP CC	VG 150	Mobilgear 600XP 150		BP Energol GR-XP-150	Klüberoil GEM 1-150 N	Meropa 150	Alpha SP 150 Tribol 1100/150	Optigear BM 150	Renolin CLP 150 Plus Renolin High Gear 150	Goya NT 150	
-15 … +30	CLPCC	VG 220	Mobilgear 600XP 220	Shell Omala F 220	BP Energol GR-XP-220	Klüberoil GEM 1-220 N	Meropa 220	Alpha SP 220 Tribol 1100/220	Optigear BM 220	Renolin CLP 220 Plus Renolin High Gear 220	Goya NT 220	Carter EP 220
-5 … +45	CLP CC	VG 460	Mobilgear 600XP 460	Shell Omala F 460	BP Energol GR-XP-460	Klüberoil GEM 1-460 N	Meropa 460	Alpha SP 460 Tribol 1100/460	Optigear BM 460	Renolin CLP 460 Plus Renolin High Gear 460	Goya NT 460	Carter EP 460
0 … +50	CLP CC	VG 680	Mobilgear 600XP 680		BP Energol GR-XP-680	Klüberoil GEM 1-680 N	Meropa 680	Alpha SP 680 Tribol 1100/680	Optigear BM 680	Renolin CLP 680 Plus Renolin High Gear 680	Goya NT 680	Carter EP 680
+5 … +60	CLP CC	VG 1000						Tribol 1100/1000				
-25 … +40	CLP HC	VG 320	Mobil SHC Gear 320 Mobil SHC 632	Shell Omala S4 GX 320	BP Enersyn EP-XF-320	Klübersynth GEM 4-320 N	Pinnacle EP 320	Alphasyn EP 320	Optigear Synthetic X 320	Renolin Unisyn CLP 320 Renolin High Gear Synth 320	El Greco 320	Carter SH 320
3)4) -40 … -10	CLP HC	VG 32	Mobil SHC 624									
3)4) -40 … +10	CLP HC	VG 68	Mobil SHC 626	Shell Omala S4 GX68	BP Enersyn EP-XF-68	Klübersynth GEM 4-68 N			Optigear Synthetic X 68	Reolin Unisyn CLP 68		
-35 … +20	CLP HC	VG 150	Mobil SHC Gear 150 Mobil SHC 629	Shell Omala S4 GX 150	BP Enersyn EP-XF-150	Klübersynth GEM 4-150 N	Pinnacle EP 150	Alphasyn EP 150	Optigear Synthetic X 150	Reolin Unisyn CLP 150	El Greco 150	Carter SH 150
-30 … +30	CLP HC	VG 220	Mobil SHC Gear 220 Mobil SHC 630	Shell Omala S4 GX 220	BP Enersyn EP-XF-220	Klübersynth GEM 4-220 N	Pinnacle EP 220	Alphasyn EP 220	Optigear Synthetic X 220	Renolin Unisyn CLP 220 Renolin High Gear Synth 220	El Greco 220	Carter SH 220
-20 … +50	CLP HC	VG 460	Mobil SHC Gear 460 Mobil SHC 634	Shell Omala S4 GX 460	BP Enersyn EP-XF-460	Klübersynth GEM 4-460 N	Pinnacle EP 460	Alphasyn EP 460	Optigear Synthetic X 460	Renolin Unisyn CLP 460 Renolin High Gear Synth 460	El Greco 460	Carter SH 460
-10 … +60	CLP HC	VG 680	Mobil SHC Gear 680 Mobil SHC 636	Shell Omala S4 GX 680	BP Enersyn EP-XF-680	Klübersynth GEM 4-680 N	Pinnacle EP 680		Optigear Synthetic X 680	Reolin Unisyn CLP 680	El Greco 680	Carter SH 680
0 … +70	CLP HC	VG 1000	Mobil SHC Gear 1000 Mobil SHC 639			Klübersynth GEM 4-1000 N						
3) -10 … +30	CLP HC NSF H1	VG 460				Klüberöl 4UH1-460 N			Optileb GT 460	Cassida Fluid GL 460		
3) -20 … +20		VG 220				Klüberöl 4UH1-220 N			Optileb GT 220	Cassida Fluid GL 220		
3)4) -40 … -10		VG 68		Shell Naturelle Gear Fluid EP 460		Klüberöl 4UH1-68 N			Optileb HY 68	Cassida Fluid GL 68		
-20 … +40	E	VG 460				Klüberbio CA2-460				Plantogear 460 S		

47049040 5

8.3 Lubricant fill quantities for horizontal gear units / mounting position M1

INFORMATION

- The specified fill quantities are guide values. The exact values vary depending on the number of gear stages and reduction ratio.
- The mark on the oil sight glass, oil level glass and/or oil dipstick is the decisive indicator for the correct oil level.
- For pivoted mounting positions, adhere to the lubricant fill quantity on the nameplates.

8.3.1 X.F..

	Oil quantity [l]			Oil quantity [l]			Oil quantity [l]	
X2F..	Splash lubrication	Pressure lubrication	X3F..	Splash lubrication	Pressure lubrication	X4F..	Splash lubrication	Pressure lubrication
X2F100	14	-	X3F100	14	-	X4F100	-	-
X2F110	14	-	X3F110	15	-	X4F110	-	-
X2F120	21	-	X3F120	23	-	X4F120	18	-
X2F130	23	-	X3F130	23	-	X4F130	18	-
X2F140	35	-	X3F140	37	-	X4F140	27	-
X2F150	38	-	X3F150	38	-	X4F150	29	-
X2F160	60	61	X3F160	63	63	X4F160	51	51
X2F170	60	61	X3F170	63	63	X4F170	51	51
X2F180	80	80	X3F180	80	80	X4F180	75	75
X2F190	80	80	X3F190	80	80	X4F190	75	75
X2F200	105	105	X3F200	105	105	X4F200	95	95
X2F210	105	105	X3F210	105	105	X4F210	95	95
X2F220	140	140	X3F220	145	145	X4F220	145	145
X2F230	140	140	X3F230	145	145	X4F230	145	145
X2F240	175	175	X3F240	170	170	X4F240	170	170
X2F250	175	175	X3F250	175	175	X4F250	170	170
X2F260	275	275	X3F260	270	270	X4F260	280	280
X2F270	275	275	X3F270	270	270	X4F270	280	280
X2F280	330	330	X3F280	335	335	X4F280	340	340
X2F290	405	405	X3F290	400	400	X4F290	415	415
X2F300	405	405	X3F300	400	400	X4F300	415	415
X2F310	550	550	X3F310	540	540	X4F310	540	540
X2F320	550	550	X3F320	540	540	X4F320	540	540

8.3.2 X.K..

	Oil quantity [l]			Oil quantity [l]			Oil quantity [l]	
X2K..	Splash lubrication	Pressure lubrication	X3K..	Splash lubrication	Pressure lubrication	X4K..	Splash lubrication	Pressure lubrication
X2K100	11	-	X3K100	13	-	X4K100	-	-
X2K110	12	-	X3K110	14	-	X4K110	-	-
X2K120	17	-	X3K120	20	-	X4K120	24	-



	Oil quantity [l]			Oil quantity [l]			Oil quantity [l]	
X2K..	**Splash lubrication**	**Pressure lubrication**	**X3K..**	**Splash lubrication**	**Pressure lubrication**	**X4K..**	**Splash lubrication**	**Pressure lubrication**
X2K130	17	-	**X3K130**	21	-	**X4K130**	26	-
X2K140	26	-	**X3K140**	33	-	**X4K140**	38	-
X2K150	28	-	**X3K150**	34	-	**X4K150**	39	-
X2K160	48	48	**X3K160**	60	60	**X4K160**	63	64
X2K170	48	48	**X3K170**	60	60	**X4K170**	80	64
X2K180	60	60	**X3K180**	75	75	**X4K180**	80	80
X2K190	60	60	**X3K190**	75	75	**X4K190**	80	80
X2K200	85	85	**X3K200**	100	100	**X4K200**	108	108
X2K210	85	85	**X3K210**	100	100	**X4K210**	115	115
X2K220	130	130	**X3K220**	130	130	**X4K220**	140	140
X2K230	130	130	**X3K230**	130	130	**X4K230**	140	140
X2K240	165	165	**X3K240**	170	170	**X4K240**	180	180
X2K250	165	165	**X3K250**	170	170	**X4K250**	176	176
X2K260	-	-	**X3K260**	255	255	**X4K260**	270	270
X2K270	-	-	**X3K270**	255	255	**X4K270**	270	270
X2K280	-	-	**X3K280**	325	325	**X4K280**	330	330
X2K290	-	-	**X3K290**	400	400	**X4K290**	410	410
X2K300	-	-	**X3K300**	400	400	**X4K300**	410	410
X2K310	-	-	**X3K310**	535	535	**X4K310**	540	540
X2K320	-	-	**X3K320**	535	535	**X4K320**	540	540

8.3.3 X.T..

	Oil quantity [l]				Oil quantity [l]		
X3T..	**Splash lubrication**	**Pressure lubrication**	**Bath lubrication**	**X4T..**	**Splash lubrication**	**Pressure lubrication**	**Bath lubrication**
X3T100	13	-	-	**X4T100**	-	-	-
X3T110	14	-	-	**X4T110**	-	-	-
X3T120	20	-	-	**X4T120**	20	-	-
X3T130	21	-	-	**X4T130**	21	-	-
X3T140	33	-	-	**X4T140**	31	-	-
X3T150	34	-	-	**X4T150**	32	-	-
X3T160	60	51	-	**X4T160**	54	54	-
X3T170	60	51	-	**X4T170**	54	54	-
X3T180	75	65	-	**X4T180**	75	75	-
X3T190	75	65	-	**X4T190**	75	75	-
X3T200	100	85	-	**X4T200**	95	95	-
X3T210	100	85	-	**X4T210**	95	95	-
X3T220	-	135	315	**X4T220**	-	205	325
X3T230	-	135	315	**X4T230**	-	205	325
X3T240	-	165	395	**X4T240**	-	260	400
X3T250	-	165	395	**X4T250**	-	260	400

8.4 Lubricant fill quantities for horizontal gear units / mounting position M3

The specified fill quantities are guide values. The exact values vary depending on the number of gear stages and reduction ratio.

The mark on the oil sight glass, oil level glass and/or oil dipstick is the decisive indicator for the correct oil level.

8.4.1 X.F..

X2F..	Oil quantity [l] Splash lubrication	X3F..	Oil quantity [l] Splash lubrication	X4F..	Oil quantity [l] Splash lubrication
X2F100	14	**X3F100**	14	**X4F100**	-
X2F110	15	**X3F110**	15	**X4F110**	-
X2F120	21	**X3F120**	21	**X4F120**	25
X2F130	21	**X3F130**	21	**X4F130**	25
X2F140	35	**X3F140**	36	**X4F140**	40
X2F150	37	**X3F150**	38	**X4F150**	40
X2F160	61	**X3F160**	62	**X4F160**	76
X2F170	61	**X3F170**	62	**X4F170**	76
X2F180	75	**X3F180**	80	**X4F180**	100
X2F190	75	**X3F190**	80	**X4F190**	100
X2F200	100	**X3F200**	105	**X4F200**	135
X2F210	100	**X3F210**	105	**X4F210**	135
X2F220	130	**X3F220**	140	**X4F220**	180
X2F230	130	**X3F230**	140	**X4F230**	180
X2F240	170	**X3F240**	175	**X4F240**	235
X2F250	170	**X3F250**	175	**X4F250**	230
X2F260	275	**X3F260**	270	**X4F260**	280
X2F270	275	**X3F270**	270	**X4F270**	280
X2F280	330	**X3F280**	335	**X4F280**	340
X2F290	405	**X3F290**	400	**X4F290**	415
X2F300	405	**X3F300**	400	**X4F300**	415
X2F310	550	**X3F310**	540	**X4F310**	540
X2F320	550	**X3F320**	540	**X4F320**	540

8.4.2 X.K..

X2K..	Oil quantity [l] Splash lubrication	X3K..	Oil quantity [l] Splash lubrication	Oil quantity [l] Bath lubrication	X4K..	Oil quantity [l] Splash lubrication
X2K100	11	**X3K100**	16	29	**X4K100**	-
X2K110	12	**X3K110**	16	29	**X4K110**	-
X2K120	16	**X3K120**	20	-	**X4K120**	20
X2K130	17	**X3K130**	22	-	**X4K130**	21
X2K140	25	**X3K140**	33	-	**X4K140**	36



	Oil quantity [l]		Oil quantity [l]			Oil quantity [l]
X2K..	Splash lubrication	X3K..	Splash lubrication	Bath lubrication	X4K..	Splash lubrication
X2K150	28	**X3K150**	35	-	**X4K150**	38
X2K160	47	**X3K160**	60	-	**X4K160**	61
X2K170	47	**X3K170**	60	-	**X4K170**	61
X2K180	60	**X3K180**	75	-	**X4K180**	75
X2K190	60	**X3K190**	75	-	**X4K190**	75
X2K200	80	**X3K200**	95	-	**X4K200**	115
X2K210	80	**X3K210**	95	-	**X4K210**	115
X2K220	130	**X3K220**	125	-	**X4K220**	140
X2K230	130	**X3K230**	125	-	**X4K230**	140
X2K240	170	**X3K240**	165	-	**X4K240**	175
X2K250	170	**X3K250**	165	-	**X4K250**	175
X2K260	-	**X3K260**	255	-	**X4K260**	270
X2K270	-	**X3K270**	255	-	**X4K270**	270
X2K280	-	**X3K280**	325	-	**X4K280**	330
X2K290	-	**X3K290**	400	-	**X4K290**	410
X2K300	-	**X3K300**	400	-	**X4K300**	410
X2K310	-	**X3K310**	535	-	**X4K310**	540
X2K320	-	**X3K320**	535	-	**X4K320**	540

8.4.3 X.T..

	Oil quantity [l]			Oil quantity [l]	
X3T..	Splash lubrication	Bath lubrication	X4T..	Splash lubrication	Bath lubrication
X3T100	**-**	34	**X4T100**	**-**	-
X3T110	**-**	34	**X4T110**	**-**	-
X3T120	**-**	46	**X4T120**	**-**	50
X3T130	**-**	48	**X4T130**	**-**	52
X3T140	**-**	80	**X4T140**	**-**	80
X3T150	**-**	84	**X4T150**	**-**	84
X3T160	**-**	142	**X4T160**	**-**	146
X3T170	**-**	142	**X4T170**	**-**	146
X3T180	**-**	170	**X4T180**	**-**	175
X3T190	**-**	170	**X4T190**	**-**	175
X3T200	**-**	230	**X4T200**	**-**	235
X3T210	**-**	230	**X4T210**	**-**	235
X3T220	115	**-**	**X4T220**	140	**-**
X3T230	115	**-**	**X4T230**	140	**-**
X3T240	150	**-**	**X4T240**	175	**-**
X3T250	150	**-**	**X4T250**	175	**-**

8.5 Lubricant fill quantities for vertical gear units / mounting positions M5 and M6

The specified fill quantities are guide values. The exact values vary depending on the number of gear stages and reduction ratio.

The mark on the oil sight glass, oil level glass and/or oil dipstick is the decisive indicator for the correct oil level.

NOTICE

Improper lubricant fill quantities may result in damage to the gear unit.

Possible damage to property.

- Keep in mind that for gear units
  - in mounting positions M5 or M6
  - with pressure lubrication
  - and oil heater,

  the **lubricant fill quantity** might be higher. Consult SEW-EURODRIVE.

8.5.1 X.F..

	Oil quantity [l]				Oil quantity [l]				Oil quantity [l]		
X2F..	**Bath lubrication**	**Pressure lubrication**	**Pressure lubrication with Drywell**	**X3F..**	**Bath lubrication**	**Pressure lubrication**	**Pressure lubrication with Drywell**	**X4F..**	**Bath lubrication**	**Pressure lubrication**	**Pressure lubrication with Drywell**
X2F100	34	-	-	**X3F100**	34	-	-	**X4F100**	-	-	-
X2F110	36	-	-	**X3F110**	36	-	-	**X4F110**	-	-	-
X2F120	50	18	11	**X3F120**	44	18	11	**X4F120**	44	18	12
X2F130	52	20	14	**X3F130**	46	20	14	**X4F130**	46	18	13
X2F140	86	38	20	**X3F140**	82	38	20	**X4F140**	78	24	21
X2F150	90	38	22	**X3F150**	88	36	22	**X4F150**	80	26	21
X2F160	152	62	38	**X3F160**	146	56	38	**X4F160**	146	45	37
X2F170	152	62	39	**X3F170**	146	56	38	**X4F170**	146	45	37
X2F180	185	75	54	**X3F180**	185	70	53	**X4F180**	175	65	50
X2F190	185	75	54	**X3F190**	185	70	53	**X4F190**	175	65	50
X2F200	250	105	75	**X3F200**	250	105	74	**X4F200**	240	100	68
X2F210	250	105	75	**X3F210**	250	105	74	**X4F210**	240	100	68
X2F220	335	125	95	**X3F220**	330	120	93	**X4F220**	330	150	93
X2F230	335	125	95	**X3F230**	330	120	93	**X4F230**	330	150	93
X2F240	410	155	113	**X3F240**	400	145	108	**X4F240**	410	185	110
X2F250	410	155	113	**X3F250**	400	145	108	**X4F250**	410	185	110
X2F260	-	220	192	**X3F260**	-	210	183	**X4F260**	-	250	186
X2F270	-	220	192	**X3F270**	-	210	183	**X4F270**	-	250	186
X2F280	-	265	234	**X3F280**	-	260	230	**X4F280**	-	305	230
X2F290	-	300	284	**X3F290**	-	295	275	**X4F290**	-	390	273
X2F300	-	300	284	**X3F300**	-	295	275	**X4F300**	-	390	273
X2F310	-	416	416	**X3F310**	-	400	399	**X4F310**	-	515	393
X2F320	-	416	416	**X3F320**	-	400	399	**X4F320**	-	515	393



8.5.2 X.K..

	Oil quantity [l]				Oil quantity [l]				Oil quantity [l]		
X2K..	**Bath lubrication**	**Pressure lubrication**	**Pressure lubrication with Drywell**	**X3K..**	**Bath lubrication**	**Pressure lubrication**	**Pressure lubrication with Drywell**	**X4K..**	**Bath lubrication**	**Pressure lubrication**	**Pressure lubrication with Drywell**
X2K100	28	-	-	**X3K100**	32	-	-	**X4K100**	-	-	-
X2K110	30	-	-	**X3K110**	34	-	-	**X4K110**	-	-	-
X2K120	40	17	10	**X3K120**	48	17	10	**X4K120**	46	20	11
X2K130	42	17	12	**X3K130**	52	18	13	**X4K130**	48	21	13
X2K140	59	26	16	**X3K140**	80	35	19	**X4K140**	82	36	19
X2K150	66	27	18	**X3K150**	84	36	21	**X4K150**	86	38	21
X2K160	138	45	32	**X3K160**	146	56	40	**X4K160**	150	63	41
X2K170	138	45	32	**X3K170**	146	56	40	**X4K170**	150	63	41
X2K180	150	60	39	**X3K180**	175	70	53	**X4K180**	180	85	53
X2K190	150	60	39	**X3K190**	175	70	53	**X4K190**	180	85	53
X2K200	205	85	60	**X3K200**	240	100	69	**X4K200**	250	110	74
X2K210	205	85	60	**X3K210**	240	100	69	**X4K210**	250	110	74
X2K220	330	130	132	**X3K220**	315	115	89	**X4K220**	330	150	93
X2K230	330	130	132	**X3K230**	315	115	89	**X4K230**	330	150	93
X2K240	405	155	140	**X3K240**	400	145	107	**X4K240**	410	190	111
X2K250	405	155	140	**X3K250**	400	145	107	**X4K250**	410	190	111
X2K260	-	-	-	**X3K260**	-	210	185	**X4K260**	-	275	185
X2K270	-	-	-	**X3K270**	-	210	185	**X4K270**	-	275	185
X2K280	-	-	-	**X3K280**	-	265	236	**X4K280**	-	345	231
X2K290	-	-	-	**X3K290**	-	300	282	**X4K290**	-	415	276
X2K300	-	-	-	**X3K300**	-	300	282	**X4K300**	-	415	276
X2K310	-	-	-	**X3K310**	-	410	411	**X4K310**	-	555	408
X2K320	-	-	-	**X3K320**	-	410	411	**X4K320**	-	555	408

8.5.3 X.T..

X3T..	Oil quantity [l]			X4T..	Oil quantity [l]		
	Bath lubrication	Pressure lubrication	Pressure lubrica-tion with Drywell		Bath lubrication	Pressure lubrica-tion	Pressure lubrica-tion with Drywell
X3T100	34	-	-	**X4T100**	-	-	-
X3T110	34	-	-	**X4T110**	-	-	-
X3T120	46	17	12	**X4T120**	50	18	12
X3T130	48	18	13	**X4T130**	52	20	13
X3T140	80	32	21	**X4T140**	80	32	21
X3T150	84	33	21	**X4T150**	84	33	21
X3T160	142	54	37	**X4T160**	146	56	37
X3T170	142	54	37	**X4T170**	146	56	37
X3T180	170	70	50	**X4T180**	175	80	50
X3T190	170	70	50	**X4T190**	175	80	50
X3T200	230	95	68	**X4T200**	235	105	68
X3T210	230	95	68	**X4T210**	235	105	68
X3T220	315	115	89	**X4T220**	325	145	89
X3T230	315	115	89	**X4T230**	325	145	89
X3T240	395	145	107	**X4T240**	400	185	107
X3T250	395	145	107	**X4T250**	400	185	107

8.6 Lubricant fill quantities for upright gear units / mounting position M2

The specified fill quantities are guide values. The exact values vary depending on the number of gear stages and reduction ratio.

The mark on the oil sight glass, oil level glass and/or oil dipstick is the decisive indicator for the correct oil level.

8.6.1 X.F..

X2F..	Oil quantity [l] Bath lubrication	X3F..	Oil quantity [l] Bath lubrication	X4F..	Oil quantity [l] Bath lubrication
X2F100	23	**X3F100**	21	**X4F100**	-
X2F110	23	**X3F110**	21	**X4F110**	-
X2F120	33	**X3F120**	33	**X4F120**	30
X2F130	35	**X3F130**	34	**X4F130**	31
X2F140	56	**X3F140**	54	**X4F140**	47
X2F150	59	**X3F150**	58	**X4F150**	50
X2F160	105	**X3F160**	91	**X4F160**	80
X2F170	105	**X3F170**	91	**X4F170**	80
X2F180	120	**X3F180**	120	**X4F180**	110
X2F190	120	**X3F190**	120	**X4F190**	110
X2F200	165	**X3F200**	165	**X4F200**	150
X2F210	165	**X3F210**	165	**X4F210**	150
X2F220	220	**X3F220**	215	**X4F220**	215
X2F230	220	**X3F230**	215	**X4F230**	215
X2F240	280	**X3F240**	265	**X4F240**	270
X2F250	280	**X3F250**	265	**X4F250**	270

8.6.2 X.K..

X2K..	Oil quantity [l] Bath lubrication	X3K..	Oil quantity [l] Bath lubrication	X4K..	Oil quantity [l] Bath lubrication
X2K100	17	**X3K100**	20	**X4K100**	-
X2K110	17	**X3K110**	20	**X4K110**	-
X2K120	25	**X3K120**	31	**X4K120**	32
X2K130	26	**X3K130**	31	**X4K130**	33
X2K140	38	**X3K140**	47	**X4K140**	54
X2K150	42	**X3K150**	50	**X4K150**	57
X2K160	66	**X3K160**	90	**X4K160**	91
X2K170	66	**X3K170**	90	**X4K170**	91
X2K180	90	**X3K180**	115	**X4K180**	120
X2K190	90	**X3K190**	115	**X4K190**	120
X2K200	125	**X3K200**	155	**X4K200**	160
X2K210	125	**X3K210**	155	**X4K210**	160
X2K220	195	**X3K220**	200	**X4K220**	215
X2K230	195	**X3K230**	200	**X4K230**	215

X2K..	Oil quantity [l] Bath lubrication	X3K..	Oil quantity [l] Bath lubrication	X4K..	Oil quantity [l] Bath lubrication
X2K240	250	**X3K240**	265	**X4K240**	275
X2K250	250	**X3K250**	265	**X4K250**	275

8.6.3 X.T..

X3T..	Oil quantity [l] Bath lubrication	X4T..	Oil quantity [l] Bath lubrication
X3T100	18	**X4T100**	-
X3T110	18	**X4T110**	-
X3T120	28	**X4T120**	34
X3T130	29	**X4T130**	34
X3T140	44	**X4T140**	56
X3T150	46	**X4T150**	60
X3T160	78	**X4T160**	92
X3T170	78	**X4T170**	92
X3T180	110	**X4T180**	115
X3T190	110	**X4T190**	115
X3T200	145	**X4T200**	150
X3T210	145	**X4T210**	150
X3T220	200	**X4T220**	210
X3T230	200	**X4T230**	210
X3T240	260	**X4T240**	270
X3T250	260	**X4T250**	270

8.7 Lubricant fill quantities for upright gear units / mounting position M4

The specified fill quantities are guide values. The exact values vary depending on the number of gear stages and reduction ratio.

The mark on the oil sight glass, oil level glass and/or oil dipstick is the decisive indicator for the correct oil level.

8.7.1 X.F..

	Oil quantity [l]			Oil quantity [l]			Oil quantity [l]	
X2F..	Bath lubrication	Pressure lubrication	X3F..	Bath lubrication	Pressure lubrication	X4F..	Bath lubrication	Pressure lubrication
X2F100	23	-	X3F100	26		X4F100	-	-
X2F110	23	-	X3F110	27		X4F110	-	-
X2F120	35	18	X3F120	35	18	X4F120	36	18
X2F130	36	18	X3F130	38	18	X4F130	38	18
X2F140	57	26	X3F140	66	26	X4F140	57	26
X2F150	62	27	X3F150	71	27	X4F150	60	27
X2F160	102	51	X3F160	108	51	X4F160	112	51
X2F170	102	51	X3F170	108	51	X4F170	104	51
X2F180	130	55	X3F180	150	55	X4F180	145	55
X2F190	130	55	X3F190	144	55	X4F190	145	55
X2F200	175	70	X3F200	200	70	X4F200	200	70
X2F210	175	70	X3F210	200	70	X4F210	200	70
X2F220	230	100	X3F220	265	100	X4F220	265	100
X2F230	230	100	X3F230	265	100	X4F230	265	100
X2F240	285	115	X3F240	330	115	X4F240	340	115
X2F250	285	115	X3F250	330	115	X4F250	340	115
X2F260	-	180	X3F260	-	180	X4F260	-	180
X2F270	-	180	X3F270	-	180	X4F270	-	180
X2F280	-	235	X3F280	-	235	X4F280	-	235
X2F290	-	255	X3F290	-	255	X4F290	-	255
X2F300	-	255	X3F300	-	255	X4F300	-	255
X2F310	-	360	X3F310	-	360	X4F310	-	360
X2F320	-	360	X3F320	-	360	X4F320	-	360

8.7.2 X.K..

	Oil quantity [l]			Oil quantity [l]			Oil quantity [l]	
X2K..	Bath lubrication	Pressure lubrication	X3K..	Bath lubrication	Pressure lubrication	X4K..	Bath lubrication	Pressure lubrication
X2K100	28		X3K100	32		X4K100	-	-
X2K110	30		X3K110	34		X4K110	-	-
X2K120	40	18	X3K120	48	18	X4K120	46	18
X2K130	42	18	X3K130	52	18	X4K130	48	18
X2K140	66	26	X3K140	80	26	X4K140	82	26
X2K150	72	27	X3K150	84	27	X4K150	86	27

X2K..	Oil quantity [l]		X3K..	Oil quantity [l]		X4K..	Oil quantity [l]	
	Bath lubrication	Pressure lubrication		Bath lubrication	Pressure lubrication		Bath lubrication	Pressure lubrication
X2K160	138	51	**X3K160**	146	51	**X4K160**	150	51
X2K170	138	51	**X3K170**	146	51	**X4K170**	150	51
X2K180	150	55	**X3K180**	175	55	**X4K180**	180	55
X2K190	150	55	**X3K190**	175	55	**X4K190**	180	55
X2K200	205	70	**X3K200**	240	70	**X4K200**	250	70
X2K210	205	70	**X3K210**	240	70	**X4K210**	250	70
X2K220	330	100	**X3K220**	315	100	**X4K220**	330	100
X2K230	330	100	**X3K230**	315	100	**X4K230**	330	100
X2K240	405	115	**X3K240**	400	115	**X4K240**	410	115
X2K250	405	115	**X3K250**	400	115	**X4K250**	410	115
X2K260	-	-	**X3K260**	-	180	**X4K260**	-	180
X2K270	-	-	**X3K270**	-	180	**X4K270**	-	180
X2K280	-	-	**X3K280**	-	235	**X4K280**	-	235
X2K290	-	-	**X3K290**	-	255	**X4K290**	-	255
X2K300	-	-	**X3K300**	-	255	**X4K300**	-	255
X2K310	-	-	**X3K310**	-	360	**X4K310**	-	360
X2K320	-	-	**X3K320**	-	360	**X4K320**	-	360

8.7.3 X.T..

X3T..	Oil quantity [l]		X4T..	Oil quantity [l]	
	Bath lubrication	Pressure lubrication		Bath lubrication	Pressure lubrication
X3T100	21	-	**X4T100**	**-**	-
X3T110	21	-	**X4T110**	**-**	-
X3T120	32	-	**X4T120**	36	-
X3T130	33	-	**X4T130**	38	-
X3T140	50	-	**X4T140**	54	-
X3T150	53	27	**X4T150**	57	27
X3T160	90	51	**X4T160**	93	51
X3T170	90	51	**X4T170**	93	51
X3T180	120	55	**X4T180**	125	55
X3T190	120	55	**X4T190**	125	55
X3T200	160	70	**X4T200**	160	70
X3T210	160	70	**X4T210**	160	70
X3T220	215	100	**X4T220**	215	100
X3T230	215	100	**X4T230**	215	100
X3T240	270	115	**X4T240**	285	115
X3T250	270	115	**X4T250**	285	115

8.8 Sealing greases / bearing greases

The table shows the grease types recommended by SEW-EURODRIVE for operating temperatures from -40 °C to 100 °C.

Manufacturer	Grease	Group
Fuchs	**Renolit CX TOM 15 OEM**[1)]	Group 1
BP	Energrease LS-EP 2	
Castrol	Longtime PD 2	
Castrol	Spheerol EP 2	
Klüber	Centoplex EP2	
Klüber	Petamo GHY 133 N	
Kuwait	Q8 Rembrandt EP2	
Mobil	Mobilux EP 2	
Shell	Gadus S2 V220 2	
Texaco	Mulifak EP2	
Total	Multis EP 2	
Castrol	**Obeen FS 2**[1)]	Group 2
Fuchs	**Plantogel 2 S**[1)]	Group 3

1) Preferably use greases also used by the manufacturer.

INFORMATION

- The greases may only be replaced within the same group. It is not permitted to mix different groups.
- If a customer wants to use a grease that is not listed in the table, the customer has to make sure that it is suitable for the intended application.

9 Malfunctions/remedy

9.1 Troubleshooting information

Read the following notes before you proceed.



⚠ WARNING

Risk of crushing if the drive starts up unintentionally.

Severe or fatal injuries.

- De-energize the motor before you start working on the unit.
- Secure the motor against unintended power-up.



⚠ WARNING

Danger of burns due to hot gear unit and hot gear unit oil.

Serious injury.

- Let the gear unit cool down before you start working on it.
- Remove the oil level plug and the oil drain plug with great care.



NOTICE

Improper handling of the gear unit and the motor may lead to damage.

Possible damage to property.

- Only qualified personnel is permitted to separate drive and motor and to carry out repair work on SEW drives.
- Please contact the SEW-EURODRIVE Service.

9.2 Possible malfunctions/remedy

Malfunctions	Possible cause	Remedy
Unusual, irregular running noise	• Meshing/grinding noise: Bearing damage • Knocking noise: Irregularity in the gearing • Deformation of the housing upon tightening • Noise generation caused by insufficient rigidity of the gear unit foundation	• Check the oil level • Stop the drive and contact SEW customer service • Check the gear unit mounting for possible deformation and correct if necessary • Reinforce the gear unit foundation
Unusual, irregular running noises	• Foreign bodies in the oil	• Check the oil level • Stop the drive and contact SEW customer service
Unusual noises in the area of the gear unit mounting	• Gear unit mounting has loosened	• Tighten retaining screws and nuts to the specified torque • Replace damaged/defective retaining screws or nuts
Operating temperature too high	• Too much oil • Oil too old • The oil is heavily contaminated • Ambient temperature too high • Gear units with fan: Air intake opening/gear unit housing contaminated • For gear units with built-in cooling: Cooling liquid flow rate too low Cooling liquid temperature too high Deposits in cooling system • Malfunction of the oil-air or oil-water cooling system • Malfunction of the water cooling cover • Malfunction of the water cooling cartridge	• Check the oil level, correct if necessary • Check when the oil was last changed; change the oil if necessary • Protect gear unit from external heat sources (e.g. provide shade) • Check air intake openings, clean them if necessary; clean the gear unit housing • Observe the separate operating instructions for the oil-water and oil-air cooling system. • Water cooling cartridge: Check the cooling water throughput and the entry temperature of the cooling water, clean the cartridge, if necessary • Water cooling cover: Check the cooling water throughput and the entry temperature of the cooling water, clean the cartridge, if necessary
Bearing point temperatures too high	• Not enough oil • Oil too old • Bearing damaged	• Check the oil level, correct if necessary • Check when the oil was last changed; change the oil if necessary • Check the bearings and replace if necessary, contact customer service
Operating temperature at backstop too high, no blocking function	• Damaged/defective backstop	• Check the backstop, replace it if necessary • Contact customer service
Oil leaking[1)] • **From cover plate** • **From inspection cover** • **From bearing cover** • **From mounting flange** • **From output/input end oil seal**	• Gasket on cover plate/inspection cover/bearing cover/mounting flange leaking • Sealing lip of the oil seal turned up • Oil seal damaged / worn	• Tighten the bolts on the respective cover plate and monitor the gear unit. If oil still leaks: Contact customer service • Vent the gear unit, monitor the gear unit. If oil still leaks: Contact customer service • Check oil seals; replace if necessary • Contact customer service

Malfunctions	Possible cause	Remedy
Oil leaking • **From breather plug**	• Too much oil • Drive not installed in proper mounting position • Frequent cold starts (oil foaming) and/or high oil level	• Correct the oil quantity • Mount the breather plug correctly and correct the oil level (see nameplate, "Lubricants" chapter)
Oil leaking • **on screw plug** • **Oil drain valve**	• Gasket not tight • Fittings loosened	• Retighten screw • Retighten the fitting and screws
Heavy V-belt wear	• Inadequately aligned belt pulleys • Harmful ambient conditions (e.g. abrasive particles, chemical substances) • V-belt overloaded	• Check V-belt pulley alignment and pretension of the belts • Protect V-belt drive from environmental influences, however, you must ensure sufficient ventilation • Replace V-belt if necessary, consult customer service
No oil pump suction **Pressure switch does not switch**	• Air in the suction line of the oil pump • Oil pump defective • Pressure switch defective	• Fill the suction line and oil pump with oil • Vent the pump at the pressure side • Replace pressure switch • Contact customer service
Malfunction of the oil-air or oil-water cooling system	• Malfunctions of oil-water or oil-air cooling system	• Observe the separate operating instructions for the oil-water and oil-air cooling system.
Gear unit does not reach cold start temperature	• Oil heating defective or connected incorrectly • Heat dissipation too great due to unfavorable climatic conditions	• Check the oil heater for proper connection and function; replace if necessary • Protect the gear unit from cooling off during the warm-up phase • Check the setting of the thermostat

1) During the run-in phase (24-hour runtime), it is normal for (small amounts of) oil/grease to leak from the oil seal (see also DIN 3761).

9.3 Customer service

Please have the following information available if you require customer service assistance:

- Complete nameplate data
- Type and extent of the problem
- Time the problem occurred and any accompanying circumstances
- Assumed cause
- A digital photograph if possible

9.4 Disposal

Dispose gear units in accordance with the regulations in force regarding respective materials:

- Steel scrap
  - Housing parts
  - Gears
  - Shafts
  - Rolling bearing
- Collect waste oil and dispose of it according to the regulations in force.

10 Address list

Germany			
Headquarters **Production** **Sales**	**Bruchsal**	SEW-EURODRIVE GmbH & Co KG Ernst-Blickle-Straße 42 D-76646 Bruchsal P.O. Box Postfach 3023 • D-76642 Bruchsal	Tel. +49 7251 75-0 Fax +49 7251 75-1970 http://www.sew-eurodrive.de sew@sew-eurodrive.de
Production / Industrial Gears	**Bruchsal**	SEW-EURODRIVE GmbH & Co KG Christian-Pähr-Str.10 D-76646 Bruchsal	Tel. +49 7251 75-0 Fax +49 7251 75-2970
Service Competence Center	**Mechanics / Mechatronics**	SEW-EURODRIVE GmbH & Co KG Ernst-Blickle-Straße 1 D-76676 Graben-Neudorf	Tel. +49 7251 75-1710 Fax +49 7251 75-1711 sc-mitte@sew-eurodrive.de
	Electronics	SEW-EURODRIVE GmbH & Co KG Ernst-Blickle-Straße 42 D-76646 Bruchsal	Tel. +49 7251 75-1780 Fax +49 7251 75-1769 sc-elektronik@sew-eurodrive.de
Drive Technology Center	**North**	SEW-EURODRIVE GmbH & Co KG Alte Ricklinger Straße 40-42 D-30823 Garbsen (near Hannover)	Tel. +49 5137 8798-30 Fax +49 5137 8798-55 sc-nord@sew-eurodrive.de
	East	SEW-EURODRIVE GmbH & Co KG Dänkritzer Weg 1 D-08393 Meerane (near Zwickau)	Tel. +49 3764 7606-0 Fax +49 3764 7606-30 sc-ost@sew-eurodrive.de
	South	SEW-EURODRIVE GmbH & Co KG Domagkstraße 5 D-85551 Kirchheim (near München)	Tel. +49 89 909552-10 Fax +49 89 909552-50 sc-sued@sew-eurodrive.de
	West	SEW-EURODRIVE GmbH & Co KG Siemensstraße 1 D-40764 Langenfeld (near Düsseldorf)	Tel. +49 2173 8507-30 Fax +49 2173 8507-55 sc-west@sew-eurodrive.de
	Drive Service Hotline / 24 Hour Service		+49 800 SEWHELP +49 800 7394357
	Additional addresses for service in Germany provided on request!		

France			
Production **Sales** **Service**	**Haguenau**	SEW-USOCOME 48-54 route de Soufflenheim B. P. 20185 F-67506 Haguenau Cedex	Tel. +33 3 88 73 67 00 Fax +33 3 88 73 66 00 http://www.usocome.com sew@usocome.com
Production	**Forbach**	SEW-USOCOME Zone industrielle Technopôle Forbach Sud B. P. 30269 F-57604 Forbach Cedex	Tel. +33 3 87 29 38 00
Assembly **Sales** **Service**	**Bordeaux**	SEW-USOCOME Parc d'activités de Magellan 62 avenue de Magellan - B. P. 182 F-33607 Pessac Cedex	Tel. +33 5 57 26 39 00 Fax +33 5 57 26 39 09
	Lyon	SEW-USOCOME Parc d'affaires Roosevelt Rue Jacques Tati F-69120 Vaulx en Velin	Tel. +33 4 72 15 37 00 Fax +33 4 72 15 37 15
	Nantes	SEW-USOCOME Parc d'activités de la forêt 4 rue des Fontenelles F-44140 Le Bignon	Tel. +33 2 40 78 42 00 Fax +33 2 40 78 42 20

France			
	Paris	SEW-USOCOME Zone industrielle 2 rue Denis Papin F-77390 Verneuil l'Etang	Tel. +33 1 64 42 40 80 Fax +33 1 64 42 40 88
	Additional addresses for service in France provided on request!		

Algeria			
Sales	**Algiers**	REDUCOM Sarl 16, rue des Frères Zaghnoune Bellevue 16200 El Harrach Alger	Tel. +213 21 8214-91 Fax +213 21 8222-84 info@reducom-dz.com http://www.reducom-dz.com

Argentina			
Assembly **Sales**	**Buenos Aires**	SEW EURODRIVE ARGENTINA S.A. Ruta Panamericana Km 37.5, Lote 35 (B1619IEA) Centro Industrial Garín Prov. de Buenos Aires	Tel. +54 3327 4572-84 Fax +54 3327 4572-21 sewar@sew-eurodrive.com.ar http://www.sew-eurodrive.com.ar

Australia			
Assembly **Sales** **Service**	**Melbourne**	SEW-EURODRIVE PTY. LTD. 27 Beverage Drive Tullamarine, Victoria 3043	Tel. +61 3 9933-1000 Fax +61 3 9933-1003 http://www.sew-eurodrive.com.au enquires@sew-eurodrive.com.au
	Sydney	SEW-EURODRIVE PTY. LTD. 9, Sleigh Place, Wetherill Park New South Wales, 2164	Tel. +61 2 9725-9900 Fax +61 2 9725-9905 enquires@sew-eurodrive.com.au

Austria			
Assembly **Sales** **Service**	**Wien**	SEW-EURODRIVE Ges.m.b.H. Richard-Strauss-Strasse 24 A-1230 Wien	Tel. +43 1 617 55 00-0 Fax +43 1 617 55 00-30 http://www.sew-eurodrive.at sew@sew-eurodrive.at

Belarus			
Sales	**Minsk**	SEW-EURODRIVE BY RybalkoStr. 26 BY-220033 Minsk	Tel.+375 17 298 47 56 / 298 47 58 Fax +375 17 298 47 54 http://www.sew.by sales@sew.by

Belgium			
Assembly **Sales** **Service**	**Brussels**	**SEW-EURODRIVE n.v./s.a.** Researchpark Haasrode 1060 Evenementenlaan 7 BE-3001 Leuven	Tel. +32 16 386-311 Fax +32 16 386-336 http://www.sew-eurodrive.be info@sew-eurodrive.be
Service Competence Center	**Industrial Gears**	**SEW-EURODRIVE n.v./s.a.** Rue de Parc Industriel, 31 BE-6900 Marche-en-Famenne	Tel. +32 84 219-878 Fax +32 84 219-879 http://www.sew-eurodrive.be service-wallonie@sew-eurodrive.be

Brazil			
Production **Sales** **Service**	**São Paulo**	SEW-EURODRIVE Brasil Ltda. Avenida Amâncio Gaiolli, 152 - Rodovia Presidente Dutra Km 208 Guarulhos - 07251-250 - SP SAT - SEW ATENDE - 0800 7700496	Tel. +55 11 2489-9133 Fax +55 11 2480-3328 http://www.sew-eurodrive.com.br sew@sew.com.br

Brazil			
Assembly **Sales** **Service**	**Rio Claro**	SEW-EURODRIVE Brasil Ltda. Rodovia Washington Luiz, Km 172 Condomínio Industrial Conpark Caixa Postal: 327 13501-600 – Rio Claro / SP	Tel. +55 19 3522-3100 Fax +55 19 3524-6653 montadora.rc@sew.com.br
	Joinville	SEW-EURODRIVE Brasil Ltda. Rua Dona Francisca, 12.346 – Pirabeiraba 89239-270 – Joinville / SC	Tel. +55 47 3027-6886 Fax +55 47 3027-6888 filial.sc@sew.com.br
	Indaiatuba	SEW-EURODRIVE Brasil Ltda. Estrada Municipal Jose Rubim, 205 Rodovia Santos Dumont Km 49 13347-510 - Indaiatuba / SP	Tel. +55 19 3835-8000 sew@sew.com.br

Bulgaria			
Sales	**Sofia**	BEVER-DRIVE GmbH Bogdanovetz Str.1 BG-1606 Sofia	Tel. +359 2 9151160 Fax +359 2 9151166 bever@bever.bg

Cameroon			
Sales	**Douala**	Electro-Services Rue Drouot Akwa B.P. 2024 Douala	Tel. +237 33 431137 Fax +237 33 431137 electrojemba@yahoo.fr

Canada			
Assembly **Sales** **Service**	**Toronto**	SEW-EURODRIVE CO. OF CANADA LTD. 210 Walker Drive Bramalea, ON L6T 3W1	Tel. +1 905 791-1553 Fax +1 905 791-2999 http://www.sew-eurodrive.ca l.watson@sew-eurodrive.ca
	Vancouver	SEW-EURODRIVE CO. OF CANADA LTD. Tilbury Industrial Park 7188 Honeyman Street Delta, BC V4G 1G1	Tel. +1 604 946-5535 Fax +1 604 946-2513 b.wake@sew-eurodrive.ca
	Montreal	SEW-EURODRIVE CO. OF CANADA LTD. 2555 Rue Leger Lasalle, PQ H8N 2V9	Tel. +1 514 367-1124 Fax +1 514 367-3677 a.peluso@sew-eurodrive.ca
	Additional addresses for service in Canada provided on request!		

Chile			
Assembly **Sales** **Service**	**Santiago**	SEW-EURODRIVE CHILE LTDA. Las Encinas 1295 Parque Industrial Valle Grande LAMPA RCH-Santiago de Chile P.O. Box Casilla 23 Correo Quilicura - Santiago - Chile	Tel. +56 2 75770-00 Fax +56 2 75770-01 http://www.sew-eurodrive.cl ventas@sew-eurodrive.cl

China			
Production **Assembly** **Sales** **Service**	**Tianjin**	SEW-EURODRIVE (Tianjin) Co., Ltd. No. 46, 7th Avenue, TEDA Tianjin 300457	Tel. +86 22 25322612 Fax +86 22 25323273 info@sew-eurodrive.cn http://www.sew-eurodrive.cn
Assembly **Sales** **Service**	**Suzhou**	SEW-EURODRIVE (Suzhou) Co., Ltd. 333, Suhong Middle Road Suzhou Industrial Park Jiangsu Province, 215021	Tel. +86 512 62581781 Fax +86 512 62581783 suzhou@sew-eurodrive.cn

China			
	Guangzhou	SEW-EURODRIVE (Guangzhou) Co., Ltd. No. 9, JunDa Road East Section of GETDD Guangzhou 510530	Tel. +86 20 82267890 Fax +86 20 82267922 guangzhou@sew-eurodrive.cn
	Shenyang	SEW-EURODRIVE (Shenyang) Co., Ltd. 10A-2, 6th Road Shenyang Economic Technological Development Area Shenyang, 110141	Tel. +86 24 25382538 Fax +86 24 25382580 shenyang@sew-eurodrive.cn
	Wuhan	SEW-EURODRIVE (Wuhan) Co., Ltd. 10A-2, 6th Road No. 59, the 4th Quanli Road, WEDA 430056 Wuhan	Tel. +86 27 84478388 Fax +86 27 84478389 wuhan@sew-eurodrive.cn
	Xi'An	SEW-EURODRIVE (Xi'An) Co., Ltd. No. 12 Jinye 2nd Road Xi'An High-Technology Industrial Development Zone Xi'An 710065	Tel. +86 29 68686262 Fax +86 29 68686311 xian@sew-eurodrive.cn
	Additional addresses for service in China provided on request!		

Colombia			
Assembly **Sales** **Service**	**Bogotá**	SEW-EURODRIVE COLOMBIA LTDA. Calle 22 No. 132-60 Bodega 6, Manzana B Santafé de Bogotá	Tel. +57 1 54750-50 Fax +57 1 54750-44 http://www.sew-eurodrive.com.co sew@sew-eurodrive.com.co

Croatia			
Sales **Service**	**Zagreb**	KOMPEKS d. o. o. Zeleni dol 10 HR 10 000 Zagreb	Tel. +385 1 4613-158 Fax +385 1 4613-158 kompeks@inet.hr

Czech Republic			
Sales **Assembly** **Service**	**Hostivice**	SEW-EURODRIVE CZ s.r.o. Floriánova 2459 253 01 Hostivice	Tel. +420 255 709 601 Fax +420 235 350 613 http://www.sew-eurodrive.cz sew@sew-eurodrive.cz
	Drive Service Hotline / 24 Hour Service	HOT-LINE +420 800 739 739 (800 SEW SEW)	**Servis:** Tel. +420 255 709 632 Fax +420 235 358 218 servis@sew-eurodrive.cz

Denmark			
Assembly **Sales** **Service**	**Copenhagen**	SEW-EURODRIVEA/S Geminivej 28-30 DK-2670 Greve	Tel. +45 43 9585-00 Fax +45 43 9585-09 http://www.sew-eurodrive.dk sew@sew-eurodrive.dk

Egypt			
Sales **Service**	**Cairo**	Copam Egypt for Engineering & Agencies 33 EI Hegaz ST, Heliopolis, Cairo	Tel. +20 2 22566-299 +1 23143088 Fax +20 2 22594-757 http://www.copam-egypt.com/ copam@datum.com.eg

Estonia			
Sales	**Tallin**	ALAS-KUUL AS Reti tee 4 EE-75301 Peetri küla, Rae vald, Harjumaa	Tel. +372 6593230 Fax +372 6593231 veiko.soots@alas-kuul.ee

Finland			
Assembly **Sales** **Service**	**Hollola**	SEW-EURODRIVE OY Vesimäentie 4 FIN-15860 Hollola 2	Tel. +358 201 589-300 Fax +358 3 780-6211 http://www.sew-eurodrive.fi sew@sew.fi
Service	**Hollola**	SEW-EURODRIVE OY Keskikankaantie 21 FIN-15860 Hollola	Tel. +358 201 589-300 Fax +358 3 780-6211 http://www.sew-eurodrive.fi sew@sew.fi
Production **Assembly**	**Karkkila**	SEW Industrial Gears Oy Valurinkatu 6, PL 8 FI-03600 Karkkila, 03601 Karkkila	Tel. +358 201 589-300 Fax +358 201 589-310 sew@sew.fi http://www.sew-eurodrive.fi

Gabon			
Sales	**Libreville**	ESG Electro Services Gabun Feu Rouge Lalala 1889 Libreville Gabun	Tel. +241 741059 Fax +241 741059 esg_services@yahoo.fr

Great Britain			
Assembly **Sales** **Service**	**Normanton**	SEW-EURODRIVE Ltd. DeVilliers Way Trident Park Normanton West Yorkshire WF6 1GX	Tel. +44 1924 893-855 Fax +44 1924 893-702 http://www.sew-eurodrive.co.uk info@sew-eurodrive.co.uk
	Drive Service Hotline / 24 Hour Service		Tel. 01924 896911

Greece			
Sales	**Athens**	Christ. Boznos & Son S.A. 12, K. Mavromichali Street P.O. Box 80136 GR-18545 Piraeus	Tel. +30 2 1042 251-34 Fax +30 2 1042 251-59 http://www.boznos.gr info@boznos.gr

Hong Kong			
Assembly **Sales** **Service**	**Hong Kong**	SEW-EURODRIVE LTD. Unit No. 801-806, 8th Floor Hong Leong Industrial Complex No. 4, Wang Kwong Road Kowloon, Hong Kong	Tel. +852 36902200 Fax +852 36902211 contact@sew-eurodrive.hk

Hungary			
Sales **Service**	**Budapest**	SEW-EURODRIVE Kft. H-1037 Budapest Kunigunda u. 18	Tel. +36 1 437 06-58 Fax +36 1 437 06-50 http://www.sew-eurodrive.hu office@sew-eurodrive.hu

India			
Registered Office **Assembly** **Sales** **Service**	**Vadodara**	SEW-EURODRIVE India Private Limited Plot No. 4, GIDC POR Ramangamdi • Vadodara - 391 243 Gujarat	Tel. +91 265 3045200, +91 265 2831086 Fax +91 265 3045300, +91 265 2831087 http://www.seweurodriveindia.com salesvadodara@seweurodrivein-dia.com

India			
Assembly **Sales** **Service**	**Chennai**	SEW-EURODRIVE India Private Limited Plot No. K3/1, Sipcot Industrial Park Phase II Mambakkam Village Sriperumbudur - 602105 Kancheepuram Dist, Tamil Nadu	Tel. +91 44 37188888 Fax +91 44 37188811 saleschennai@seweurodriveindia.com

Ireland			
Sales **Service**	**Dublin**	Alperton Engineering Ltd. 48 Moyle Road Dublin Industrial Estate Glasnevin, Dublin 11	Tel. +353 1 830-6277 Fax +353 1 830-6458 info@alperton.ie http://www.alperton.ie

Israel			
Sales	**Tel-Aviv**	Liraz Handasa Ltd. Ahofer Str 34B / 228 58858 Holon	Tel. +972 3 5599511 Fax +972 3 5599512 http://www.liraz-handasa.co.il office@liraz-handasa.co.il

Italy			
Assembly **Sales** **Service**	**Solaro**	SEW-EURODRIVE di R. Blickle & Co.s.a.s. Via Bernini,14 I-20020 Solaro (Milano)	Tel. +39 02 96 9801 Fax +39 02 96 980 999 http://www.sew-eurodrive.it sewit@sew-eurodrive.it

Ivory Coast			
Sales	**Abidjan**	SICA Société Industrielle & Commerciale pour l'Afrique 165, Boulevard de Marseille 26 BP 1173 Abidjan 26	Tel. +225 21 25 79 44 Fax +225 21 25 88 28 sicamot@aviso.ci

Japan			
Assembly **Sales** **Service**	**Iwata**	SEW-EURODRIVE JAPAN CO., LTD 250-1, Shimoman-no, Iwata Shizuoka 438-0818	Tel. +81 538 373811 Fax +81 538 373855 http://www.sew-eurodrive.co.jp sewjapan@sew-eurodrive.co.jp

Kazakhstan			
Sales	**Almaty**	ТОО "СЕВ-ЕВРОДРАЙВ" пр.Райымбека, 348 050061 г. Алматы Республика Казахстан	Тел. +7 (727) 334 1880 Факс +7 (727) 334 1881 http://www.sew-eurodrive.kz sew@sew-eurodrive.kz

Kenya			
Sales	**Nairobi**	Barico Maintenances Ltd Kamutaga Place Commercial Street Industrial Area P.O.BOX 52217 - 00200 Nairobi	Tel. +254 20 6537094/5 Fax +254 20 6537096 info@barico.co.ke

Latvia			
Sales	**Riga**	SIA Alas-Kuul Katlakalna 11C LV-1073 Riga	Tel. +371 6 7139253 Fax +371 6 7139386 http://www.alas-kuul.com info@alas-kuul.com

Lebanon			
Sales Lebanon	**Beirut**	Gabriel Acar & Fils sarl B. P. 80484 Bourj Hammoud, Beirut	Tel. +961 1 510 532 Fax +961 1 494 971 ssacar@inco.com.lb
		After Sales Service	service@medrives.com
Sales Jordan / Kuwait / Saudi Arabia / Syria	**Beirut**	Middle East Drives S.A.L. (offshore) Sin El Fil. B. P. 55-378 Beirut	Tel. +961 1 494 786 Fax +961 1 494 971 info@medrives.com http://www.medrives.com
		After Sales Service	service@medrives.com

Lithuania			
Sales	**Alytus**	UAB Irseva Statybininku 106C LT-63431 Alytus	Tel. +370 315 79204 Fax +370 315 56175 irmantas@irseva.lt http://www.sew-eurodrive.lt

Luxembourg			
Assembly **Sales** **Service**	**Brussels**	**SEW-EURODRIVE n.v./s.a.** Researchpark Haasrode 1060 Evenementenlaan 7 BE-3001 Leuven	Tel. +32 16 386-311 Fax +32 16 386-336 http://www.sew-eurodrive.lu info@sew-eurodrive.be

Madagascar			
Sales	**Antananarivo**	Ocean Trade BP21bis. Andraharo Antananarivo. 101 Madagascar	Tel. +261 20 2330303 Fax +261 20 2330330 oceantrabp@moov.mg

Malaysia			
Assembly **Sales** **Service**	**Johor**	SEW-EURODRIVE SDN BHD No. 95, Jalan Seroja 39, Taman Johor Jaya 81000 Johor Bahru, Johor West Malaysia	Tel. +60 7 3549409 Fax +60 7 3541404 sales@sew-eurodrive.com.my

Mexico			
Assembly **Sales** **Service**	**Quéretaro**	SEW-EURODRIVE MEXICO SA DE CV SEM-981118-M93 Tequisquiapan No. 102 Parque Industrial Quéretaro C.P. 76220 Quéretaro, México	Tel. +52 442 1030-300 Fax +52 442 1030-301 http://www.sew-eurodrive.com.mx scmexico@seweurodrive.com.mx

Mongolia			
Sales	**Ulan Bator**	SEW-EURODRIVE Representative Office Mongolia Olympic street 8, 2nd floor Juulchin corp bldg., Sukhbaatar district, Ulaanbaatar 14253	Tel. +976-70009997 Fax +976-70009997 http://www.sew-eurodrive.mn sew@sew-eurodrive.mn

Morocco			
Sales **Service**	**Mohammedia**	SEW-EURODRIVE SARL 2 bis, Rue Al Jahid 28810 Mohammedia	Tel. +212 523 32 27 80/81 Fax +212 523 32 27 89 sew@sew-eurodrive.ma http://www.sew-eurodrive.ma

Namibia			
Sales	**Swakopmund**	DB Mining & Industrial Services Einstein Street Strauss Industrial Park Unit1 Swakopmund	Tel. +264 64 462 738 Fax +264 64 462 734 sales@dbmining.in.na

Netherlands			
Assembly **Sales** **Service**	**Rotterdam**	SEW-EURODRIVE B.V. Industrieweg 175 NL-3044 AS Rotterdam Postbus 10085 NL-3004 AB Rotterdam	Tel. +31 10 4463-700 Fax +31 10 4155-552 Service: 0800-SEWHELP http://www.sew-eurodrive.nl info@sew-eurodrive.nl

New Zealand			
Assembly **Sales** **Service**	**Auckland**	SEW-EURODRIVE NEW ZEALAND LTD. P.O. Box 58-428 82 Greenmount drive East Tamaki Auckland	Tel. +64 9 2745627 Fax +64 9 2740165 http://www.sew-eurodrive.co.nz sales@sew-eurodrive.co.nz
	Christchurch	SEW-EURODRIVE NEW ZEALAND LTD. 10 Settlers Crescent, Ferrymead Christchurch	Tel. +64 3 384-6251 Fax +64 3 384-6455 sales@sew-eurodrive.co.nz

Nigeria			
Sales	**Lagos**	EISNL Engineering Solutions and Drives Ltd Plot 9, Block A, Ikeja Industrial Estate (Ogba Scheme) Adeniyi Jones St. End Off ACME Road, Ogba, Ikeja, Lagos Nigeria	Tel. +234 (0)1 217 4332 team.sew@eisnl.com http://www.eisnl.com

Norway			
Assembly **Sales** **Service**	**Moss**	SEW-EURODRIVE A/S Solgaard skog 71 N-1599 Moss	Tel. +47 69 24 10 20 Fax +47 69 24 10 40 http://www.sew-eurodrive.no sew@sew-eurodrive.no

Pakistan			
Sales	**Karachi**	Industrial Power Drives Al-Fatah Chamber A/3, 1st Floor Central Commercial Area, Sultan Ahmed Shah Road, Block 7/8, Karachi	Tel. +92 21 452 9369 Fax +92-21-454 7365 seweurodrive@cyber.net.pk

Paraguay			
Sales	**Fernando de la Mora**	SEW-EURODRIVE PARAGUAY S.R.L De la Victoria 112, Esquina nueva Asunción Departamento Central Fernando de la Mora, Barrio Bernardino	Tel. +595 991 519695 Fax +595 21 3285539 sew-py@sew-eurodrive.com.py

Peru			
Assembly **Sales** **Service**	**Lima**	SEW DEL PERU MOTORES REDUCTORES S.A.C. Los Calderos, 120-124 Urbanizacion Industrial Vulcano, ATE, Lima	Tel. +51 1 3495280 Fax +51 1 3493002 http://www.sew-eurodrive.com.pe sewperu@sew-eurodrive.com.pe

Poland			
Assembly **Sales** **Service**	**Lodz**	SEW-EURODRIVE Polska Sp.z.o.o. ul. Techniczna 5 PL-92-518 Łódź	Tel. +48 42 676 53 00 Fax +48 42 676 53 49 http://www.sew-eurodrive.pl sew@sew-eurodrive.pl

Poland			
	Service	Tel. +48 42 6765332 / 42 6765343 Fax +48 42 6765346	Linia serwisowa Hotline 24H Tel. +48 602 739 739 (+48 602 SEW SEW) serwis@sew-eurodrive.pl
Portugal			
Assembly **Sales** **Service**	**Coimbra**	SEW-EURODRIVE, LDA. Apartado 15 P-3050-901 Mealhada	Tel. +351 231 20 9670 Fax +351 231 20 3685 http://www.sew-eurodrive.pt infosew@sew-eurodrive.pt
Romania			
Sales **Service**	**Bucharest**	Sialco Trading SRL str. Brazilia nr. 36 011783 Bucuresti	Tel. +40 21 230-1328 Fax +40 21 230-7170 sialco@sialco.ro
Russia			
Assembly **Sales** **Service**	**St. Petersburg**	ZAO SEW-EURODRIVE P.O. Box 36 RUS-195220 St. Petersburg	Tel. +7 812 3332522 +7 812 5357142 Fax +7 812 3332523 http://www.sew-eurodrive.ru sew@sew-eurodrive.ru
Senegal			
Sales	**Dakar**	SENEMECA Mécanique Générale Km 8, Route de Rufisque B.P. 3251, Dakar	Tel. +221 338 494 770 Fax +221 338 494 771 senemeca@sentoo.sn http://www.senemeca.com
Serbia			
Sales	**Beograd**	DIPAR d.o.o. Ustanicka 128a PC Košum, IV sprat SRB-11000 Beograd	Tel. +381 11 347 3244 / +381 11 288 0393 Fax +381 11 347 1337 office@dipar.rs
Singapore			
Assembly **Sales** **Service**	**Singapore**	SEW-EURODRIVE PTE. LTD. No 9, Tuas Drive 2 Jurong Industrial Estate Singapore 638644	Tel. +65 68621701 Fax +65 68612827 http://www.sew-eurodrive.com.sg sewsingapore@sew-eurodrive.com
Slovakia			
Sales	**Bratislava**	SEW-Eurodrive SK s.r.o. Rybničná 40 SK-831 06 Bratislava	Tel. +421 2 33595 202 Fax +421 2 33595 200 sew@sew-eurodrive.sk http://www.sew-eurodrive.sk
	Žilina	SEW-Eurodrive SK s.r.o. Industry Park - PChZ ulica M.R.Štefánika 71 SK-010 01 Žilina	Tel. +421 41 700 2513 Fax +421 41 700 2514 sew@sew-eurodrive.sk
	Banská Bystrica	SEW-Eurodrive SK s.r.o. Rudlovská cesta 85 SK-974 11 Banská Bystrica	Tel. +421 48 414 6564 Fax +421 48 414 6566 sew@sew-eurodrive.sk
	Košice	SEW-Eurodrive SK s.r.o. Slovenská ulica 26 SK-040 01 Košice	Tel. +421 55 671 2245 Fax +421 55 671 2254 sew@sew-eurodrive.sk

Slovenia			
Sales **Service**	**Celje**	Pakman - Pogonska Tehnika d.o.o. UI. XIV. divizije 14 SLO - 3000 Celje	Tel. +386 3 490 83-20 Fax +386 3 490 83-21 pakman@siol.net

South Africa			
Assembly **Sales** **Service**	**Johannesburg**	SEW-EURODRIVE (PROPRIETARY) LIMITED Eurodrive House Cnr. Adcock Ingram and Aerodrome Roads Aeroton Ext. 2 Johannesburg 2013 P.O.Box 90004 Bertsham 2013	Tel. +27 11 248-7000 Fax +27 11 494-3104 http://www.sew.co.za info@sew.co.za
	Cape Town	SEW-EURODRIVE (PROPRIETARY) LIMITED Rainbow Park Cnr. Racecourse & Omuramba Road Montague Gardens Cape Town P.O.Box 36556 Chempet 7442 Cape Town	Tel. +27 21 552-9820 Fax +27 21 552-9830 Telex 576 062 bgriffiths@sew.co.za
	Durban	SEW-EURODRIVE (PROPRIETARY) LIMITED 48 Prospecton Road Isipingo Durban P.O. Box 10433, Ashwood 3605	Tel. +27 31 902 3815 Fax +27 31 902 3826 cdejager@sew.co.za
	Nelspruit	SEW-EURODRIVE (PTY) LTD. 7 Christie Crescent Vintonia P.O.Box 1942 Nelspruit 1200	Tel. +27 13 752-8007 Fax +27 13 752-8008 robermeyer@sew.co.za

South Korea			
Assembly **Sales** **Service**	**Ansan**	SEW-EURODRIVE KOREA CO., LTD. B 601-4, Banweol Industrial Estate #1048-4, Shingil-Dong, Danwon-Gu, Ansan-City, Kyunggi-Do Zip 425-839	Tel. +82 31 492-8051 Fax +82 31 492-8056 http://www.sew-korea.co.kr master.korea@sew-eurodrive.com
	Busan	SEW-EURODRIVE KOREA Co., Ltd. No. 1720 - 11, Songjeong - dong Gangseo-ku Busan 618-270	Tel. +82 51 832-0204 Fax +82 51 832-0230 master@sew-korea.co.kr

Spain			
Assembly **Sales** **Service**	**Bilbao**	SEW-EURODRIVE ESPAÑA, S.L. Parque Tecnológico, Edificio, 302 E-48170 Zamudio (Vizcaya)	Tel. +34 94 43184-70 Fax +34 94 43184-71 http://www.sew-eurodrive.es sew.spain@sew-eurodrive.es

Swaziland			
Sales	**Manzini**	C G Trading Co. (Pty) Ltd PO Box 2960 Manzini M200	Tel. +268 2 518 6343 Fax +268 2 518 5033 engineering@cgtrading.co.sz

Sweden			
Assembly **Sales** **Service**	**Jönköping**	SEW-EURODRIVE AB Gnejsvägen 6-8 S-55303 Jönköping Box 3100 S-55003 Jönköping	Tel. +46 36 3442 00 Fax +46 36 3442 80 http://www.sew-eurodrive.se jonkoping@sew.se

Switzerland			
Assembly **Sales** **Service**	**Basel**	Alfred Imhof A.G. Jurastrasse 10 CH-4142 Münchenstein bei Basel	Tel. +41 61 417 1717 Fax +41 61 417 1700 http://www.imhof-sew.ch info@imhof-sew.ch

Tanzania			
Sales	**Dar es Salaam**	SEW-EURODRIVE PTY LIMITED TANZANIA Plot 52, Regent Estate PO Box 106274 Dar Es Salaam	Tel. +255 0 22 277 5780 Fax +255 0 22 277 5788 uroos@sew.co.tz

Thailand			
Assembly **Sales** **Service**	**Chonburi**	SEW-EURODRIVE (Thailand) Ltd. 700/456, Moo.7, Donhuaroh Muang Chonburi 20000	Tel. +66 38 454281 Fax +66 38 454288 sewthailand@sew-eurodrive.com

Tunisia			
Sales	**Tunis**	T. M.S. Technic Marketing Service Zone Industrielle Mghira 2 Lot No. 39 2082 Fouchana	Tel. +216 79 40 88 77 Fax +216 79 40 88 66 http://www.tms.com.tn tms@tms.com.tn

Turkey			
Assembly **Sales** **Service**	**Kocaeli-Gebze**	SEW-EURODRİVE Sistemleri San. Ve TIC. Ltd. Sti Gebze Organize Sanayi Böl. 400 Sok No. 401 41480 Gebze Kocaeli	Tel. +90-262-9991000-04 Fax +90-262-9991009 http://www.sew-eurodrive.com.tr sew@sew-eurodrive.com.tr

Ukraine			
Assembly **Sales** **Service**	**Dnipropetrovsk**	ООО «СЕВ-Евродрайв» ул.Рабочая, 23-В, офис 409 49008 Днепропетровск	Тел. +380 56 370 3211 Факс. +380 56 372 2078 http://www.sew-eurodrive.ua sew@sew-eurodrive.ua

United Arab Emirates			
Sales **Service**	**Sharjah**	Copam Middle East (FZC) Sharjah Airport International Free Zone P.O. Box 120709 Sharjah	Tel. +971 6 5578-488 Fax +971 6 5578-499 copam_me@eim.ae

USA			
Production **Assembly** **Sales** **Service**	**Southeast Region**	SEW-EURODRIVE INC. 1295 Old Spartanburg Highway P.O. Box 518 Lyman, S.C. 29365	Tel. +1 864 439-7537 Fax Sales +1 864 439-7830 Fax Manufacturing +1 864 439-9948 Fax Assembly +1 864 439-0566 Fax Confidential/HR +1 864 949-5557 http://www.seweurodrive.com cslyman@seweurodrive.com
Assembly **Sales** **Service**	**Northeast Region**	SEW-EURODRIVE INC. Pureland Ind. Complex 2107 High Hill Road, P.O. Box 481 Bridgeport, New Jersey 08014	Tel. +1 856 467-2277 Fax +1 856 845-3179 csbridgeport@seweurodrive.com
	Midwest Region	SEW-EURODRIVE INC. 2001 West Main Street Troy, Ohio 45373	Tel. +1 937 335-0036 Fax +1 937 332-0038 cstroy@seweurodrive.com
	Southwest Region	SEW-EURODRIVE INC. 3950 Platinum Way Dallas, Texas 75237	Tel. +1 214 330-4824 Fax +1 214 330-4724 csdallas@seweurodrive.com

USA			
	Western Region	SEW-EURODRIVE INC. 30599 San Antonio St. Hayward, CA 94544	Tel. +1 510 487-3560 Fax +1 510 487-6433 cshayward@seweurodrive.com
	Additional addresses for service in the USA provided on request!		

Venezuela			
Assembly **Sales** **Service**	**Valencia**	SEW-EURODRIVE Venezuela S.A. Av. Norte Sur No. 3, Galpon 84-319 Zona Industrial Municipal Norte Valencia, Estado Carabobo	Tel. +58 241 832-9804 Fax +58 241 838-6275 http://www.sew-eurodrive.com.ve ventas@sew-eurodrive.com.ve sewfinanzas@cantv.net

Vietnam			
Sales	**Ho Chi Minh City**	**All sectors except harbor and offshore:** Nam Trung Co., Ltd 250 Binh Duong Avenue, Thu Dau Mot Town, Binh Duong Province HCM office: 91 Tran Minh Quyen Street District 10, Ho Chi Minh City	Tel. +84 8 8301026 Fax +84 8 8392223 namtrungco@hcm.vnn.vn truongtantam@namtrung.com.vn khanh-nguyen@namtrung.com.vn
		Harbor and offshore: DUC VIET INT LTD Industrial Trading and Engineering Services A75/6B/12 Bach Dang Street, Ward 02, Tan Binh District, 70000 Ho Chi Minh City	Tel. +84 8 62969 609 Fax +84 8 62938 842 totien@ducvietint.com
	Hanoi	Nam Trung Co., Ltd R.205B Tung Duc Building 22 Lang ha Street Dong Da District, Hanoi City	Tel. +84 4 37730342 Fax +84 4 37762445 namtrunghn@hn.vnn.vn

Zambia			
Sales	**Kitwe**	EC Mining Limited Plots No. 5293 & 5294,Tangaanyika Road, Off Mutentemuko Road, Heavy Industrial Park, P.O.BOX 2337 Kitwe	Tel. +260 212 210 642 Fax +260 212 210 645 sales@ecmining.com http://www.ecmining.com



Index

A

Accessories....26
Accessories, abbreviations....26

B

Backstop
- Maintenance intervals....213
- Structure....65

Base frame....69, 178
Bearing greases....252
Breather....58

C

Change of mounting position....208
Changing the oil....224
Check oil level
- Standard procedure....216

Checking and cleaning the breather plug....229
Checking the oil consistency....223
Checking the oil level
- Notes on the procedure for fixed and variabel pivoted mounting positions....219
- Procedure for gear units with oil expansion tank....218

Circulation cooling....70
Clockwise rotation....65
Coating systems....56
Cooling fan
- X.F.. fan (standard)....70
- X.K.. Advanced (option)....71

Cooling types....70
Cooling water cartridge
- Types of cooling water....185

Copyright notice....8
Counterclockwise rotation....65
Couplings....147
- Mounting tolerances....147

Customer service....255

D

Direction of rotation dependencies....40
Disposal....256
Drywell sealing system....55
DUO10A diagnostic unit....79
Dust protection lip....53
DUV10A diagnostic unit....78

E

Embedded safety notes....7
ET....59
Exterior corrosion protection....20

F

Fan....70
- Installation....179
- Maintenance....231

Fan cooling....70
Fixed pivoted mounting position
- Checking the oil level....219
- Definition....35

Flange coupling
- Mounting onto shaft....94, 102
- Mounting the flange connection....95, 104
- Removal....98, 106
- Structure....63

Flange couplings with cylindrical interference fit....93
- Machine shaft dimensions....93
- Mounting....94
- Removing....98

Flange couplings with keyway
- Machine shaft diameters....102
- Removal....106

Foundation....84

G

Gearing and shafts....48
Grease nipple on gear unit cover....54

H

Horizontal housing /HH
- description....43

Housing type
- horizontal housing /HH....43
- universal housing /HU....44

I

IEC....66
Input shaft....49
Inspection intervals....213
Installing the gear unit....83
Internal conservation....20

L
Labyrinth seal....53
Lubricant change intervals....215
Lubricant fill quantities for mounting position M1....241
Lubricant fill quantities for mounting position M2....248
Lubricant fill quantities for mounting position M3....243
Lubricant fill quantities for mounting position M4....250
Lubricant fill quantities mounting positions M5 and M6....245
Lubricant table....239
Lubricants....239
Lubricating greases....252
Lubrication....57
Lubrication points....54
Lubrication types....57

M
Maintenance intervals....213
Malfunctions....254
Motor adapter
  Assembly....149
  Structure....66
Motor pump
  Mechanical connection....179
  Startup....205
  Structure....62
Mounting flange
  Assembly....146
  Design....64
Mounting position....27
Mounting position and standard mounting surface....31
Mounting surface....29

N
Nameplate....22
NEMA....66
Notes
  Designation in the documentation....7
NTB....77
NTB temperature switch....77

O
Oil bath lubrication....57
Oil dipstick....58
Oil drain plug....58
Oil drain valve....58
Oil expansion tank
  Filling oil....86
  Installation....86
  Position....59
  Structure....59
Oil fill with pressure lubrication....87
Oil heater
  Electrical connection....193
  Limit temperature for gear unit startup....190
  Maintenance....237
  Malfunction....254
  Notes on the function....188
  Startup....208
  Structure....76
  Thermostat....189
Oil level check....216
Oil level glass....58
Oil seal....53
Oil-air cooler for pressure lubrication
  Maintenance....237
  Malfunction....254
  Mechanical connection....186
  Structure....75
Oil-air cooler for splash lubrication
  Inspection....236
  Structure....75
Oil-air cooler with motor pump for pressure lubrication
  Startup....207
Oil-air cooler with motor pump for splash lubrication
  Startup....207
Oil-water cooler for pressure lubrication
  Maintenance....237
  Malfunctions....254
  Mechanical installation....186
  Structure....75
Oil-water cooler for splash lubrication
  Maintenance....236
  Mechanical connection....186
Oil-water cooler with motor pump for pressure lubrication
  Startup....207
Oil-water cooler with motor pump for splash lubrication
  Startup....207



Oil-water cooler with splash lubrication
Cooling media 180
OS1, OS2, OS3 56
Output shaft 49
Output shaft as a splined hollow shaft
Installation 137
Output shaft as hollow shaft with keyway
Installation 108
Structure 51
Output shaft as hollow shaft with shrink disk
Installation 121
Structure 51
Output shaft as hollow shaft with splining
Structure 52
Overview of housing types and options 46
OWC 75

P

Packaging 20
Pivoted mounting position
Checking the oil level 219
Definition 34
Preliminary work 83
Pressure lubrication 57, 87
Pressure switch 90
Dimensions 199
Electrical connection 199
Startup 205
Structure 77
Technical data 199
PT100 ..... 77, 200
PT100 temperature sensor 77

R

Refilling grease 229
Rigid flange couplings with keyway
Mounting 102

S

Safety notes 9
Safety notes
Designation in the documentation 7
Structure of the embedded safety notes 7
Structure of the section-related safety notes 7
Sealing grease 252
Sealing systems 53
Section-related safety notes 7
SEP 60
Shaft end pump
Filling with oil 87
Position 61
Pressure switch 90
Startup 205
Structure 60
Shaft position 30
Shrink disk
Installation 121
Structure 51
Shutting down gear units 210
Signal words in safety notes 7
Splash lubrication 57
Splined solid shafts 50
Split housing 238
Starting up the gear unit at low ambient temperatures 209
Stickers on the gear unit 11
Storage conditions 20, 21
Swing base 178
Structure 68
Symbols on the gear unit 11

T

Taconite 53
Temperature sensor PT100
Dimensions 200
Electrical connection 200
Technical data 200
Temperature switch NTB
Dimensions 201
Electrical connection 201
Technical data 201
Temperature switch TSK
Dimensions 202
Electrical connection 202
Technical data 202
Tightening torques
Foot-mounted gear units 83
Retaining screws of gear unit mount-on parts 83
Tolerances 80
Torque arm
Assembly 144
Design 62
Transport 15
Transport conditions 20
TSK 77
TSK temperature switch 77
Type designation of the gear unit 23

Type designation of the oil supply system 24, 25

U

Universal housing /HU
description.....44

V

Variable pivoted mounting position
Checking the oil level.....219
Definition.....36
V-belt drive
Maximum permitted motor weight.....156
V-belt drives
Assembly.....156
Design.....67
Malfunctions.....254
Visual oil level check.....58

W

Warning notes on the gear unit.....11
Waste oil.....256
Water cooling cartridge
Cleaning.....233
Cleaning the inside.....235
Connection.....181
Installation.....181
Maintenance.....233
Maintenance intervals.....233
Malfunctions.....254
Removal.....234
Requirements on the water quality.....183
Startup.....205, 206
Structure.....73
Water cooling cover
Connection.....72
Installation.....179
Maintenance.....231
Malfunctions.....254
Removal.....180, 182, 232
Structure.....72





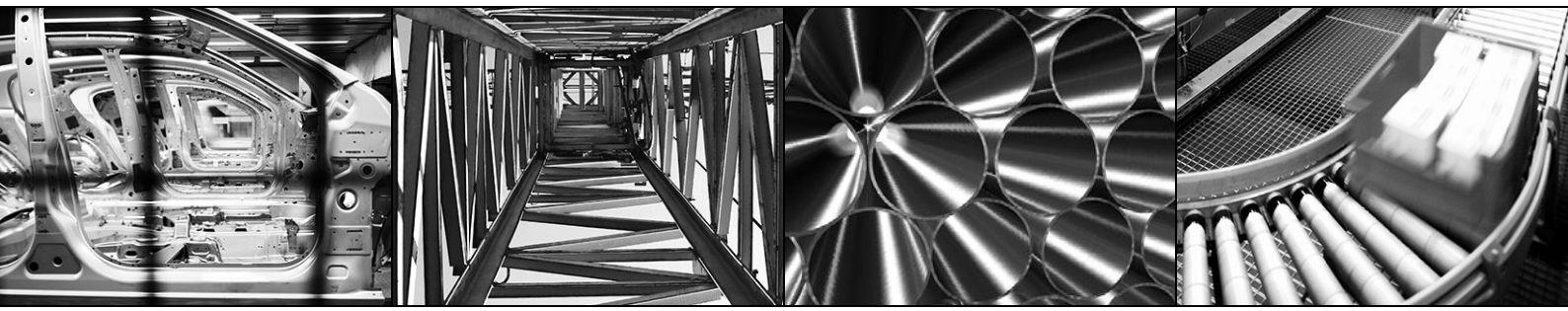



SEW-EURODRIVE
Driving the world

SEW-EURODRIVE GmbH & Co KG
P.O. Box 3023
76642 BRUCHSAL
GERMANY
Phone +49 7251 75-0
Fax +49 7251 75-1970
sew@sew-eurodrive.com

➞ **www.sew-eurodrive.com**