Level | Pressure | Flow | Temperature | Liquid Analysis | Registration | Systems Components | Services | Solutions

Technical Information

Levelflex M FMP43

Guided Level-Radar
Continuous Level Transmitter for continuous level measurement in liquids in hygienic applications.





Application
The Levelflex M FMP43 is used for continuous level measurement of liquids in applications with special hygienic requirements:

Materials
- All wetted components are FDA-listed and tested in accordance with USP Cl. VI.
- Choice of mechanically polished or electropolished metal surfaces up to 0.38 µm and low Δ ferrite content.

Design
- The design is flush-mounted and gap-free and meets ASME BPE requirements.
- The probe is completely dismountable; the probe rod, process connection and seals are replaceable.
- Aseptic process connections from DN25 (1") are available.
- The probe is autoclavable and suitable for CIP, SIP.

Approvals (hygiene)
- Approvals according to 3A and EHEDG
- Certificate of Compliance (CoC)

The following interfaces are available for system integration:
- HART (standard) with 4 to 20 mA analog; PROFIBUS PA, FOUNDATION Fieldbus

Your benefits
- **Measurement independent** of product properties such as:
  – density,
  – dielectric constant,
  – conductivity.
- **Measurement possible despite very turbulent surfaces or foam**.
- Easy menu-guided onsite operation via four-line plain text display.
- Convenient remote operation, diagnosis and documentation of the measuring point via the FieldCare operating program which is provided free of charge.
- Optional remote display and operation.
- Envelope curve presentation onsite on the display for easy diagnosis.
- Electronics can be replaced without opening the tank.
- Application in safety related systems (Overfill prevention) with requirements for functional safety up to SIL 2 in accordance to IEC 61508/IEC 61511-1.
- Approvals:
  – Europe: ATEX
  – North America: FM, CSA
  – China: NEPSI (in preparation)

TI00424F/00/EN/15.12
71198463

Endress+Hauser
People for Process Automation

Table of contents

Function and system design 3
Measuring principle 3
Equipment architecture 4

Input 8
Measured variable 8
Measuring range 8
Blocking distance 8
Used frequency spectrum 8

Output 9
Output signal 9
Signal on alarm 9
Linearization 9
Data of the FOUNDATION Fieldbus interface 9

Auxiliary energy 11
Electrical connection 11
Ground connection 11
Cable gland 11
Terminals 11
Terminal assignment 12
Connector 13
Load HART 14
Supply voltage 14
Cable entry 15
Power consumption 15
Current consumption 15
FISCO 15
Overvoltage protector 15

Performance characteristics 16
Reference operating conditions 16
Maximum measured error 16
Resolution 17
Reaction time 17
Influence of ambient temperature 17

Operating conditions: Installation 18
General instructions 18
Cleaning of the probe 19
Special instructions 20
Notes on special installation situations 21
Installation for difficult to access process connections 22

Operating conditions: Environment 23
Ambient temperature range 23
Ambient temperature limits 23
Storage temperature 23
Climate class 23
Degree of protection 23
Vibration resistance 23
Cleaning of the probe 23
Electromagnetic compatibility (EMC) 23

Operating conditions: Process 24
Process temperature range 24
Process pressure 24
Dielectric constant 24

Mechanical construction 25
Design, dimensions 25
General information on flanges 29
Tolerance of probe length 29
Weight 29
Material (not in contact with process) 30
Material (in contact with process) 33
Process connection 33
Probe 33

Human interface 34
Operation concept 34
Display elements 34
Operating elements 35
Onsite operation 36
Remote operation 37

Certificates and approvals 40
CE mark 40
Ex approval 40
Suitability for hygenic processes 41
Pharma (CoC) 41
Overfill prevention 41
Telecommunications 41
External standards and guidelines 41

Ordering information 42
Levelflex M FMP43 42

Accessories 45
Weather protection cover 45
Weld-in adapter 45
Remote display FHX40 46
Commubox FXA195 HART 48
Commubox FXA291 48
ToF Adapter FXA291 48
Protective cover 48
Calibration kit 48

Additional documentation 49
Fields of activities 49
Competence brochure 49
Technical Information 49
Operating Instructions 49

Function and system design

Measuring principle

The Levelflex is a "downward-looking" measuring system that functions according to the ToF method (ToF = Time of Flight). The distance from the reference point (process connection of the measuring device, → 26) to the product surface is measured. High-frequency pulses are injected to a probe and led along the probe. The pulses are reflected by the product surface, received by the electronic evaluation unit and converted into level information. This method is also known as TDR (Time Domain Reflectometry).

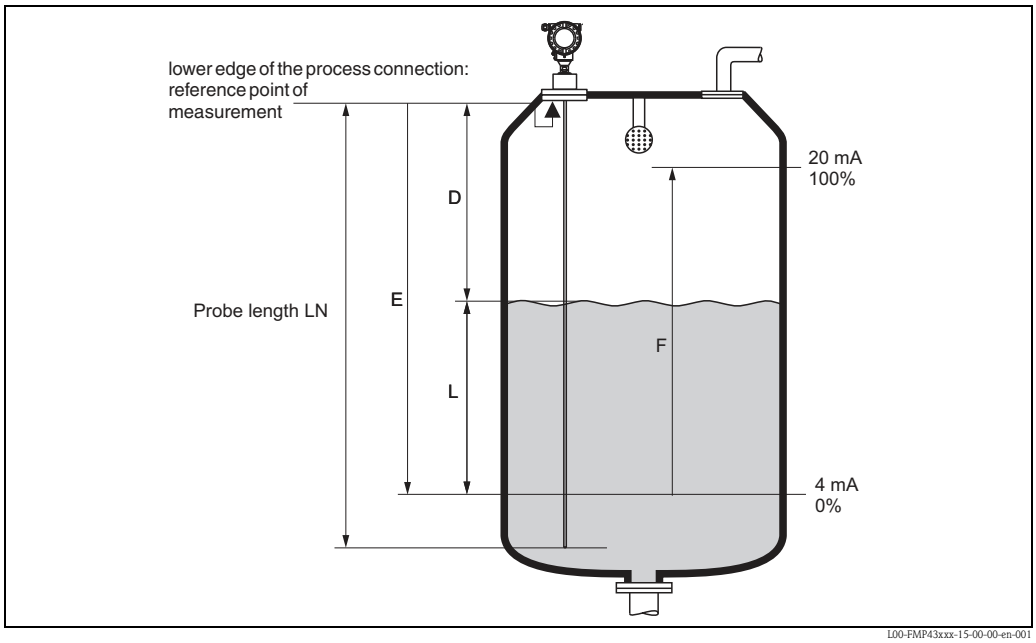

Reference point of measurement, details → 26

Dielectric constant

The dielectric constant (DC) of the medium has a direct impact on the degree of reflection of the high-frequency pulses. In the case of large DC values, such as for water or ammonia, there is strong pulse reflection while, with low DC values, such as for hydrocarbons, weak pulse reflection is experienced.

Input

The reflected pulses are transmitted from the probe to the electronics. There, a microprocessor analyses the signals and identifies the level echo, which was generated by the reflection of the high-frequency pulses at the product surface. This clear signal finding benefits from the more than 30 years of experience with pulse time-of-flight procedures that have been integrated into the development of the PulseMaster® Software.
The distance "D" to the product surface is proportional to the time of flight "t" of the pulse:

$D = c \cdot t/2$,
with "c" being the speed of light.

Based on the known empty distance "E", the level "L" is calculated:

$L = E - D$

Reference point for "E" see above diagram.

The Levelflex possesses functions for the interference echo suppression that can be activated by the user. They guarantee that interference echoes from e.g. internals and struts are not interpreted as level echoes.

Output

The Levelflex is initially adjusted at the factory to the probe length ordered, so that in most cases only the application parameters, that automatically adapt the device to the measuring conditions, need to be entered. For models with current output, the factory adjustment for zero point "E" and span is "F" 4 mA and 20 mA. For digital outputs and the display module, the factory adjustment for zero point "E" and span "F" is 0 % and 100 %. A linearization function with max. 32 points, that is based on a manually or semi-automatically input table, can be activated onsite or via remote operation. This function enables, for example, the conversion of the level into units of volume or weight.

Equipment architecture

Probe selection

Probe type:	Rod probe, compact Standard version	Rod probe, compact Slotted nut for separation from housing	Rod probe, remote Slotted nut for separation from housing
	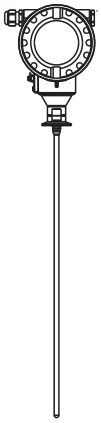		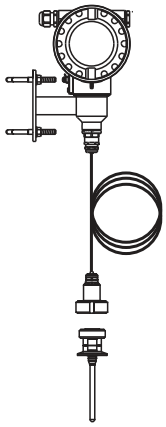
Probe length:	0.3 to 4 m		
Sideways capacity:	■ 10 Nm with 316L (1.4435) ■ 16 Nm with Hastelloy C22 (on request)		
Options:		■ Reference probe can be connected (Calibration kit FMP43 – order number: 71041382) ■ Autoclavable (Protective cover FMP43 – order no.: 71041379)	
Feature 70	**Option "1"**	**Option "5"**	**Option "6, 7"**

Stand-alone

- Power supply directly from power line (4-wire) or from transmitter power supply unit (2-wire).
- Operation by onsite display or remote operation via HART protocol.

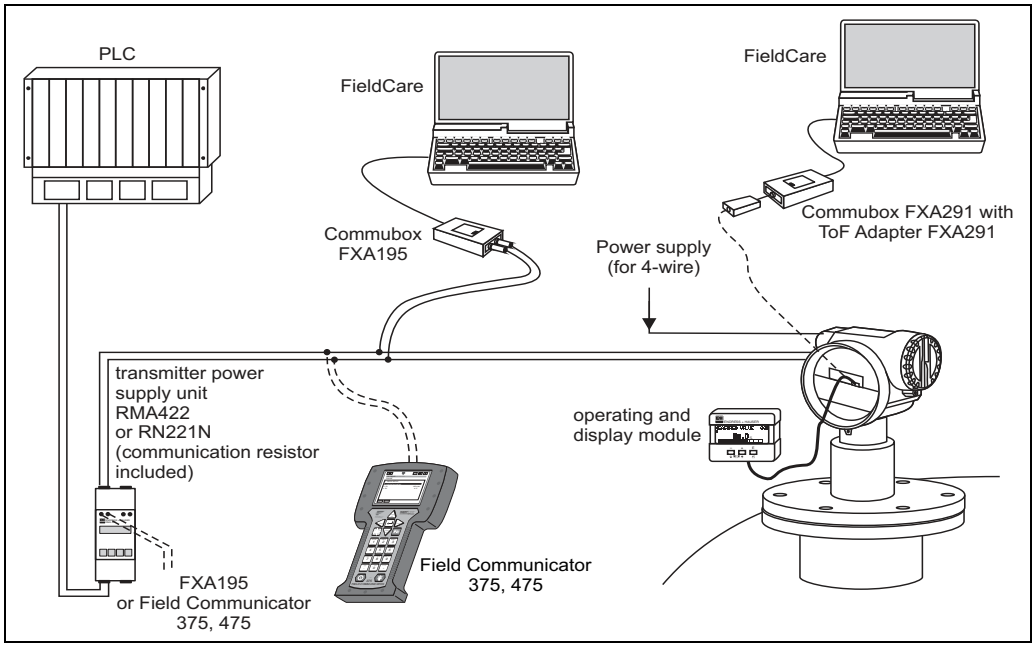

System integration via PROFIBUS PA

Maximum 32 transmitters (depending on the segment coupler, 10 in the Ex ia IIC hazardous area according to the FISCO Model) can be connected to the bus. The Bus voltage is supplied by the segment coupler. Both onsite as well as remote operation are possible.

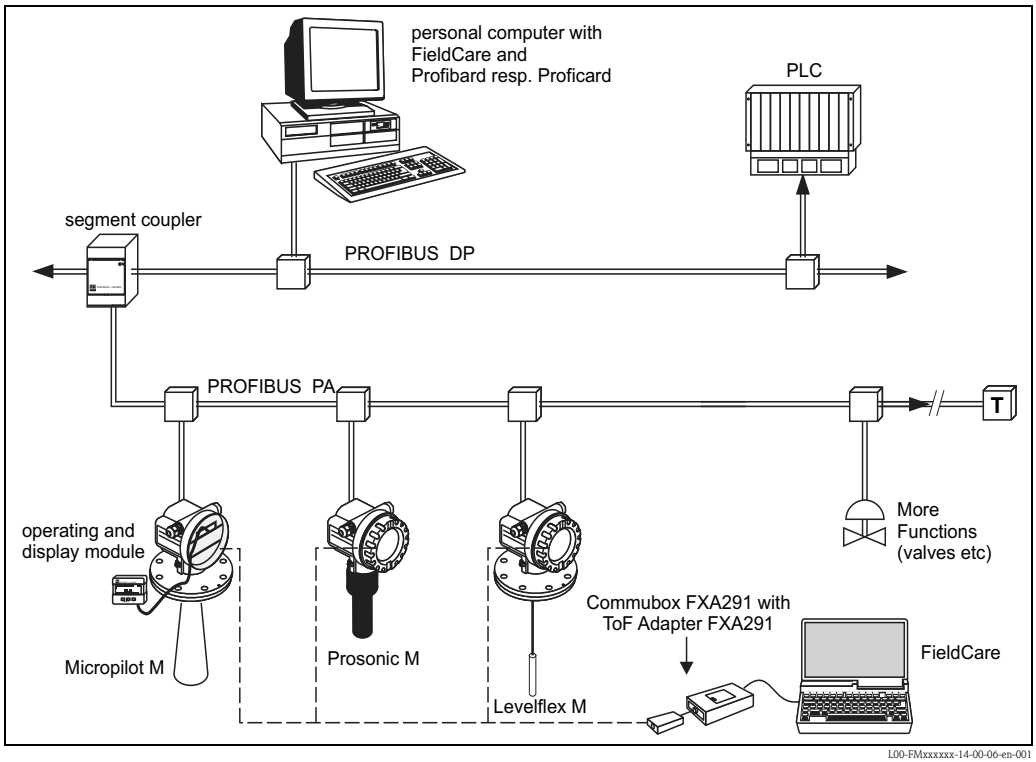

System integration via FOUNDATION Fieldbus

Max. 32 transmitters (standard, Ex em or Ex d) can be connected to the bus. For protection type Ex ia IIC, the max. number of transmitters depends on the relevant regulations and standards for the interconnection of intrinsically safe circuits (EN 60079-14, verification of intrinsic safety). Both onsite as well as remote operation are possible. The complete measuring system comprises:

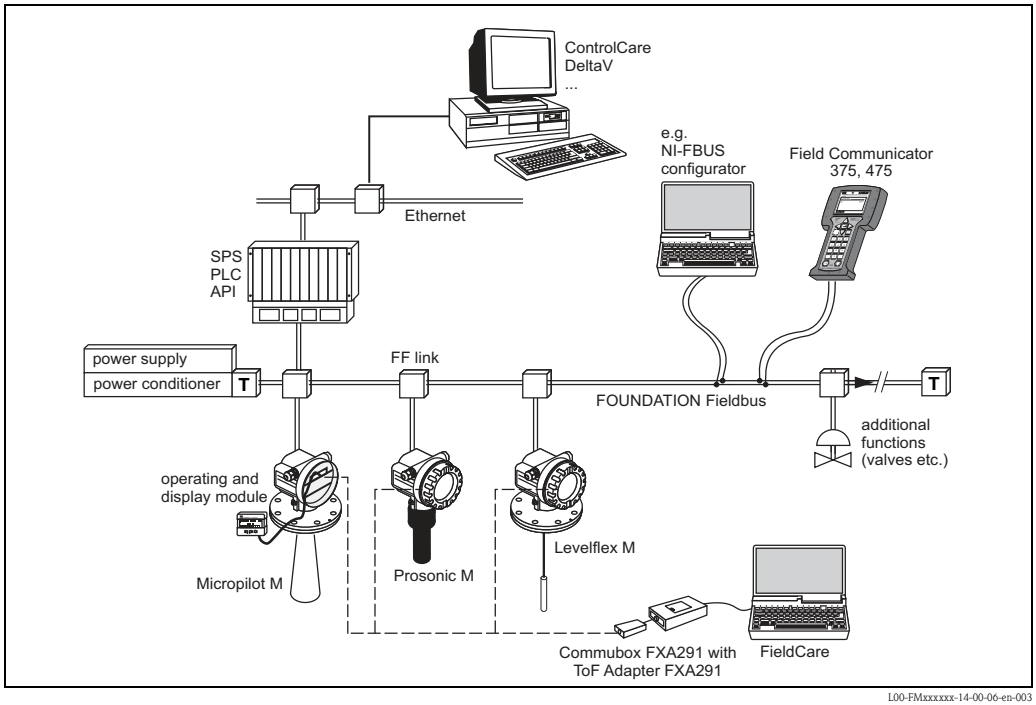

System integration via Fieldgate

Vendor Managed Inventory

By using Fieldgates to interrogate tank or silo levels remotely, suppliers of raw materials can provide their regular customers with information about the current supplies at any time and, for example, account for them in their own production planning. For their part, the Fieldgates monitor the configured level limits and, if required, automatically activate the next supply. The spectrum of options here ranges from a simple purchasing requisition via e-mail through to fully automatic order administration by coupling XML data into the planning systems on both sides.

Remote maintenance of measuring equipment

Fieldgates not only transfer the current measured values, they also alert the responsible standby personnel, if required, via e-mail or SMS. In the event of an alarm or also when performing routine checks, service technicians can diagnose and configure connected HART devices remotely. All that is required for this is the corresponding HART operating software (e.g. FieldCare) for the connected device. Fieldgate passes on the information transparently, so that all options for the respective operating software are available remotely. Some onsite service operations can be avoided by using remote diagnosis and remote configuration and all others can at least be better planned and prepared.

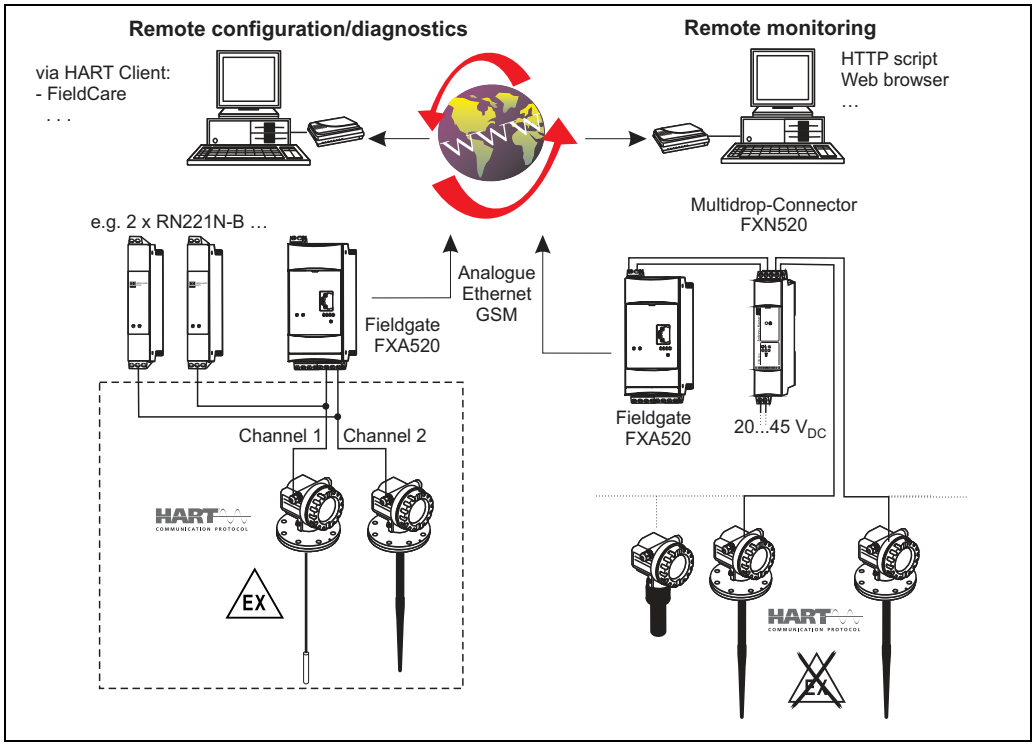

Note!
The number of devices which can be connected in multidrop mode can be calculated by the "FieldNetCalc" program. A description of this program can be found in Technical Information TI00400F/00/EN (Multidrop Connector FXN520). The program is available from your Endress+Hauser sales organization or in the internet at: www.endress.com → select your country → download → search: Fieldnetcalc.

Input

Measured variable

The measured variable is the distance between the reference point (see Fig, → 🖹 26) and the product surface. Subject to the input zero point empty distance "E" (see Fig., → 🖹 3) the level is calculated.
Alternatively, the level can be converted by means of linearization (32 points) into other variables (volume, mass).

Measuring range

The measuring range spans the entire probe. The upper blocking distance set in the delivery status can be adapted as required (see recommendations in the "Blocking distance" chapter). The specified accuracy of the probe is reduced in the upper and lower range of the probe (table, → 🖹 16), especially when using media with a smaller dielectric constant (DC < 7).

Blocking distance

The upper blocking distance (= UB) is the minimum distance from the reference point of the measurement (lower edge of process connection) to the maximum level. At the lowest part of the probe an exact measurement is not possible, see "Performance characteristics", → 🖹 16.

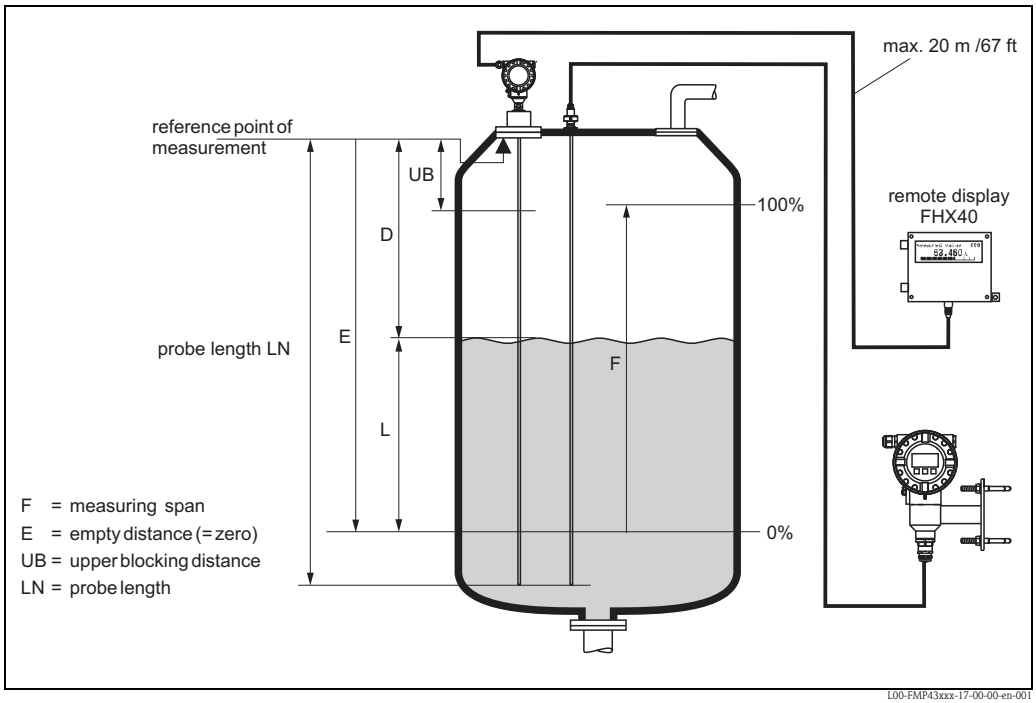

Reference point of measurement, details → 🖹 26

The blocking distance is preset to 0.2 m when using rod probes. The blocking distance can be reduced when the probe is installed flush with a wall or in a nozzle with a max. height of 50 mm.

When using a spray ball the blocking distance may not be smaller than 50 mm.

Used frequency spectrum

100 MHz to 1.5 GHz

Output

Output signal

- 4 to 20 mA (invertible) with HART protocol
- PROFIBUS PA:
  - signal coding: Manchester Bus Powered (MBP)
  - data transmission rate: 31.25 KBit/s, voltage mode
- FOUNDATION Fieldbus (H1):
  - signal coding: Manchester Bus Powered (MBP)
  - data transmission rate: 31.25 KBit/s, voltage mode

Signal on alarm

Error information can be accessed via the following interfaces:
- Local display:
  - Error symbol
  - Plain text display
- Current output, signal on error can be selected (e.g. according to NAMUR recommendation NE43)
- Digital interface

Linearization

The linearization function of the Levelflex M allows the conversion of the measured value into any unit of length or volume and mass or %. Linearization tables for calculating the volume in cylindrical tanks are preprogrammed. Other tables of up to 32 value pairs can be entered manually or semi-automatically.
The creation of a linearization table with FieldCare is particularly convenient.

Data of the FOUNDATION Fieldbus interface

Basic Data

Device Type	1012 (hex)
Device Revision	04 (hex)
DD Revision	02 (hex)
CFF Revision	02 (hex)
ITK Version	4.61
ITK-Certification Driver-No.	www.endress.com / www.fieldbus.org
Link-Master (LAS) cabable	yes
Link Master / Basic Device selectable	yes; Default: Basic Devce
Number VCRs	24
Number of Link-Objects in VFD	24

Virtual communication references (VCRs)

Permanent Entries	1
Client VCRs	0
Server VCRs	24
Source VCRs	23
Sink VCRs	0
Subscriber VCRs	23
Publisher VCRs	23

Link Settings

Slot time	4
Min. Inter PDU delay	6
Max. response delay	10

Transducer Blocks

Block	Content	Output values
Sensor Block	contains all parameters related to the measurement	■ level or volume[1] (channel 1) ■ distance (channel 2)
Diagnsotic Block	contains diagnostiv information	no output values
Display Block	contains parameters to configure the local display	no output values

1) Depending on the configuration of the sensor-block.

Function Blocks

Block	Content	Execution time	Functionality
Resource Block	The Resource Block contains all the data that uniquely identifies the field device. It is an electronic version of a nameplate of the device.		enhanced
Analog Input Block 1 Analog Input Block 2	The AI block takes the manufacturer's input data, selected by channel number, and makes it available to other function blocks at its output.	30 ms	standard
PID Block	The PID block serves as proportional-integral-derivative controller and is used almost universally to do closed-loop-control in the field including cascade and feedforward.	80 ms	standard
Arithmetic Block	This block is designed to permit simple use of popular measurement math functions. The user does not have to know how to write equations. The math algorithm is selected by name, chosen by the user for the function to be done.	50 ms	standard
Input Selector Block	The input selector block provides selection of up to four inputs and generates an output based on the configured action. This block normally receives its inputs from AI blocks. The block performs maximum, minimum, middle, average and ‘first good’ signal selection.	30 ms	standard
Signal Characte-rizer Block	The signal characterizer block has two sections, each with an output that is a non-linear function of the respective input. The non-linear function is determined by a single look-up table with 21 arbitrary x-y pairs.	40 ms	standard
Integrator Block	The Integrator Function Block integrates a variable as a function of the time or accumulates the counts from a Pulse Input block. The block may be used as a totalizer that counts up until reset or as a batch totalizer that has a setpoint, where the integrated or accumulated value is compared to pre-trip and trip settings, generating discrete signals when these settings are reached.	60 ms	standard

Auxiliary energy

Electrical connection

Terminal compartment

Three housings are available:
- Aluminum housing F12 with additionally sealed terminal compartment for:
  - standard,
  - Ex ia.
- Aluminum housing T12 with separate terminal compartment for:
  - standard,
  - Ex e,
  - Ex d
  - Ex ia (with overvoltage protection).
- Stainless steel 316L (1.4435) housing F23 for:
  - standard,
  - Ex ia.

After mounting, the housing can be turned 350° in order to simplify access to the display and the terminal compartment.

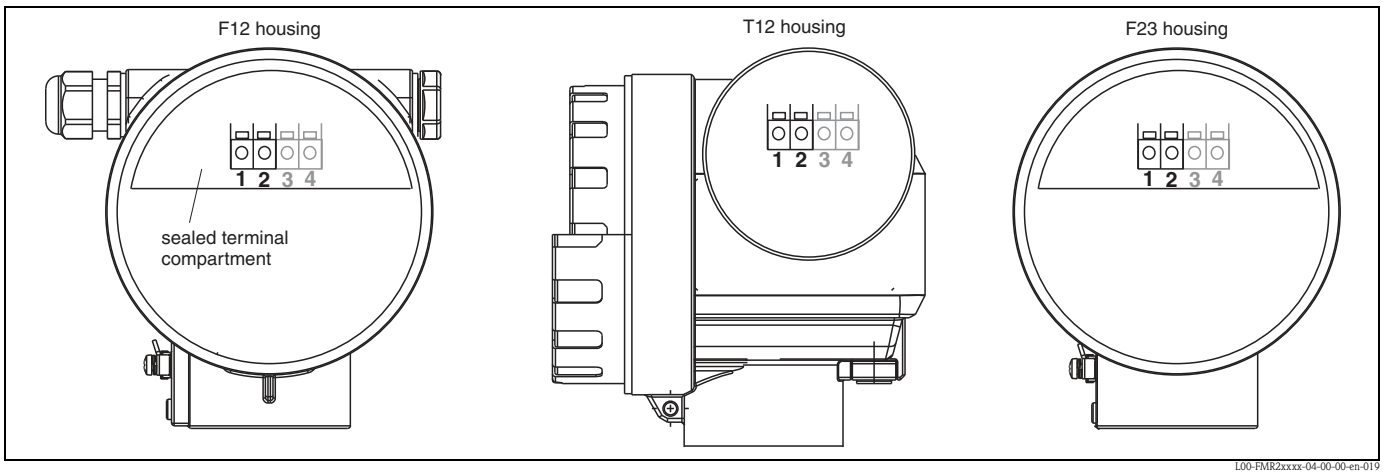

Ground connection

It is necessary to make a good ground connection to the ground terminal on the outside of the housing, in order to achieve EMC security.

Cable gland

Type		Clamping area
Standard, Ex ia, IS	Plastic M20x1.5	5 to 10 mm
Ex em, Ex nA	Metal M20x1.5	7 to 10.5 mm

Terminals

For wire cross-sections of 0.5 to 2.5 mm^2.

Terminal assignment

2-wire, 4 to 20 mA with HART

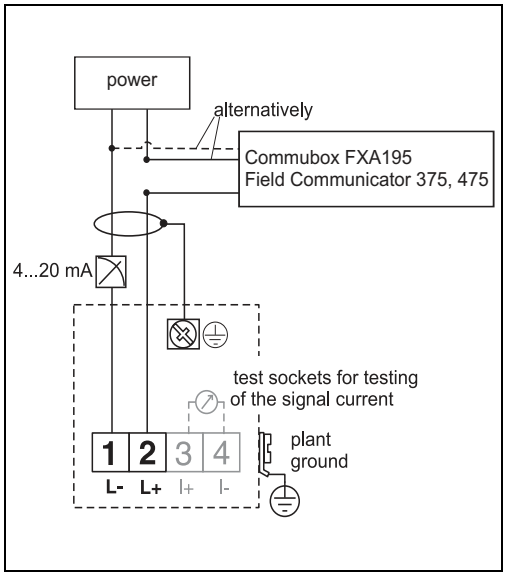

L00-FMxxxxxx-04-00-00-en-015

4-wire, 4 to 20 mA active with HART

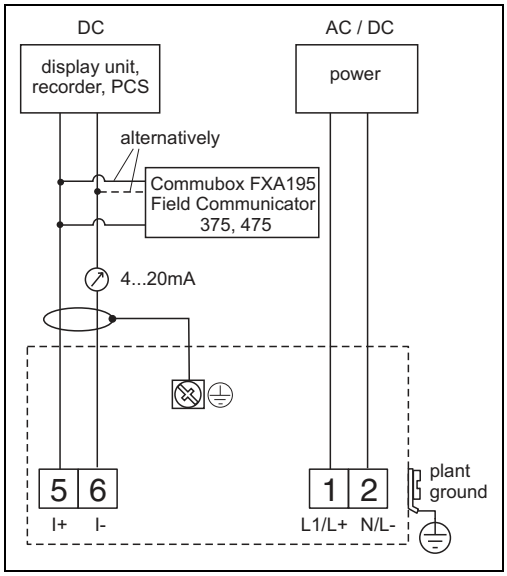

L00-FMxxxxxx-04-00-00-en-011

Note!
If 4-wire for dust-Ex-applications is used, the current output is intrinsically save.

Connect the connecting line to the screw terminals in the terminal compartment.

Cable specifications:
A standard installation cable is sufficient if only the analog signal is used. Use a shielded cable when working with a superimposed communications signal (HART).

Note!
Protective circuitry against reverse polarity, RFI and over-voltage peaks is built into the device (see also TI00241F/00/EN "EMC Test Procedures").

PROFIBUS PA

The digital communication signal is transmitted to the bus via a 2-wire connection. The bus also provides the auxiliary energy. For further information on the network structure and grounding and for further bus system components such as bus cables, see the relevant documentation, e.g. Operating Instructions BA034S/04/EN "Guidelines for planning and commissioning PROFIBUS DP/PA" and the PNO Guideline.

Cable specifications:
Use a twisted, shielded two-wire cable, preferably cable type A.

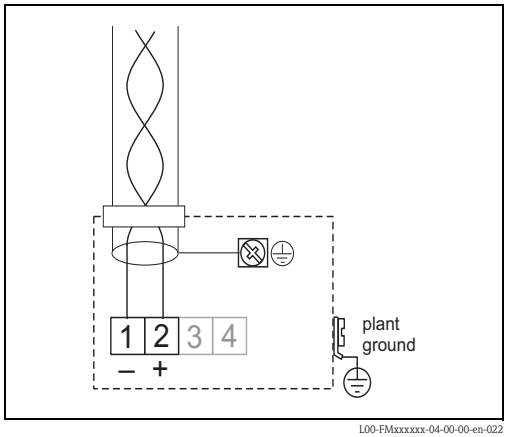

L00-FMxxxxxx-04-00-00-en-022

Note!
For further information on the cable specifications, see Operating Instructions BA034S/04/EN Guidelines for planning and commissioning PROFIBUS DP/PA", PNO Guideline 2.092 " PROFIBUS PA User and Installation Guideline" and IEC 61158-2 (MBP).

FOUNDATION Fieldbus

The digital communication signal is transmitted to the bus via a 2-wire connection. The bus also provides the auxiliary energy. For further information on the network structure and grounding and for further bus system components such as bus cables, see the relevant documentation, e.g. Operating Instructions BA013S/04/EN "FOUNDATION Fieldbus Overview" and the FOUNDATION Fieldbus Guideline.

Cable specifications:
Use a twisted, shielded two-wire cable, preferably cable type A.

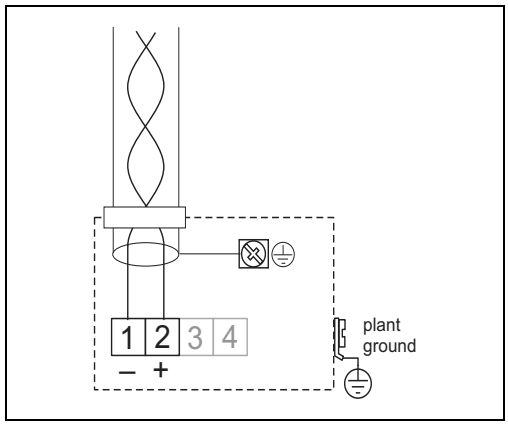

L00-FMxxxxxx-04-00-00-en-022

Note!
For further information on the cable specifications, see Operating Instructions BA013S/04/EN "FOUNDATION Fieldbus Overview", FOUNDATION Fieldbus Guideline and IEC 61158-2 (MBP).

Connector

For the versions with a connector M12 or 7/8", the housing does not have to be opened for connecting the signal line.

PIN assignment for M12 connector

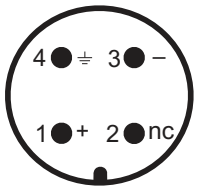

A0011175

PIN	Meaning
1	Signal +
2	Not assigned
3	Signal –
4	Earth

PIN assignment for 7/8" connector

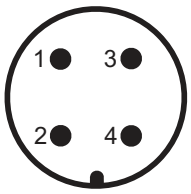

A0011176

PIN	Meaning
1	Signal –
2	Signal +
3	Shield
4	Not assigned

Load HART

Minimum load for HART communication: 250 Ω

Supply voltage

HART, 2-wire

The following values are the voltages across the terminals directly at the device:

Communication		Current consumption	Terminal voltage
HART	standard	4 mA	16 V to 36 V
		20 mA	7.5 V to 36 V
	Ex ia	4 mA	16 V to 30 V
		20 mA	7.5 V to 30 V
	Ex em Ex d	4 mA	16 V to 30 V
		20 mA	11 V to 30 V
Fixed current, adjustable e.g. for solar power operation (measured value transferred at HART)	standard	11 mA	10 V to 36 V
	Ex ia	11 mA	10 V to 30 V
Fixed current for HART Multidrop mode	standard	4 mA[1)]	16 V to 36 V
	Ex ia	4 mA[1)]	16 V to 30 V

1) Start up current 11 mA.

HART residual ripple, 2-wire: $U_{ss} \leq 200$ mV

HART, 4-wire active

Version	Voltage	max. load
DC	10.5 to 32 V	600 Ω
AC, 50/60 Hz	90 to 253 V	600 Ω

HART residual ripple, 4-wire, DC version: $U_{ss} \leq 2$ V, voltage incl. ripple within the permitted voltage (10.5 to 32 V).

PROFIBUS PA and FOUNDATION Fieldbus

The following values are the voltages across the terminals directly at the device:

Version	Terminal voltage
Standard	9 V to 32 V
Ex ia (FISCO model)	9 V to 17.5 V
Ex ia (Entity concept)	9 V to 24 V

Supply voltage	9 V to 32 V [1)]
Lift-off voltage	9 V

1) There may be additional restrictions for devices with an explosion protection certificate. Refer to the notes in the appropriate safety instructions (XA).

Cable entry

- Cable gland: M20x1.5 (only cable entry for Ex d)
- Cable entry: G½ or ½NPT
- PROFIBUS PA M12 plug
- FOUNDATION Fieldbus 7/8" plug

Power consumption

Min. 60 mW, max. 900 mW.

Current consumption

HART

Communication	Output current	Current consumption	Power consumption
HART, 2-wire	3.6 to 22 mA[1)]	—	min. 60 mW, max. 900 mW
HART, 4-wire (90 to 250 V_{AC})	2.4 to 22 mA	~ 3 to 6 mA	~ 3,5 VA
HART, 4-wire (10.5 to 32 V_{DC})	2.4 to 22 mA	~ 100 mA	~ 1 W

1) For HART-Multidrop: start up current is 11 mA.

PROFIBUS PA

Max. 11 mA.

FOUNDATION Fieldbus

Nominal current	15 mA
Starting current	≤ 15 mA
Error current	0 mA
FISCO/FNICO conformal	Compliant
Polarity sensitive	No

FISCO

U_i	17,5 V
I_i	500 mA; with overvoltage protection 273 mA
P_i	5,5 W; with overvoltage protection 1,2 W
C_i	5 nF
L_i	0,01 mH

Overvoltage protector

If the measuring device is used for the level measurement in flammable liquids which requires the use of an overvoltage protection according to EN/IEC 60079-14 or EN/IEC 60060-1 (10 kA, pulse 8/20 µs) it has to be ensured that

- the measuring device with integrated overvoltage protection with 600 V gas discharge tubes within the T12-enclosure is used, refer to "Ordering information", → 🖹 42
  or
- this protection is achieved by the use of other appropriate measures (external protection devices e.g. HAW562Z).

Performance characteristics

Reference operating conditions

- Temperature = +20 °C ±5 °C
- Pressure = 1013 mbar abs. ±20 mbar
- Relative humidity (air) = 65 % ±20 %
- Metallic tank, no internals, distance to tank wall > 500 mm
- Medium: water (DC > 7), respectively oil (DC = 2)
- Probe length > 500 mm

Maximum measured error

Typical statements for reference conditions:
DIN EN 61298-2, percentage of the span.

Output:	Digital	Analog
sum of non-linearity, non-repeatability and hysteresis	±3 mm	±0.06 %
Offset / Zero	±4 mm	±0.03 %

If the reference conditions are not met, the offset/zero arising from the installation setup may be up to ±12 mm. This additional offset/zero can be compensated for by entering a correction (function **"offset" (057)**) during commissioning.

Differing from this, the following measuring error is present in the vicinity of the upper and lower probe end:

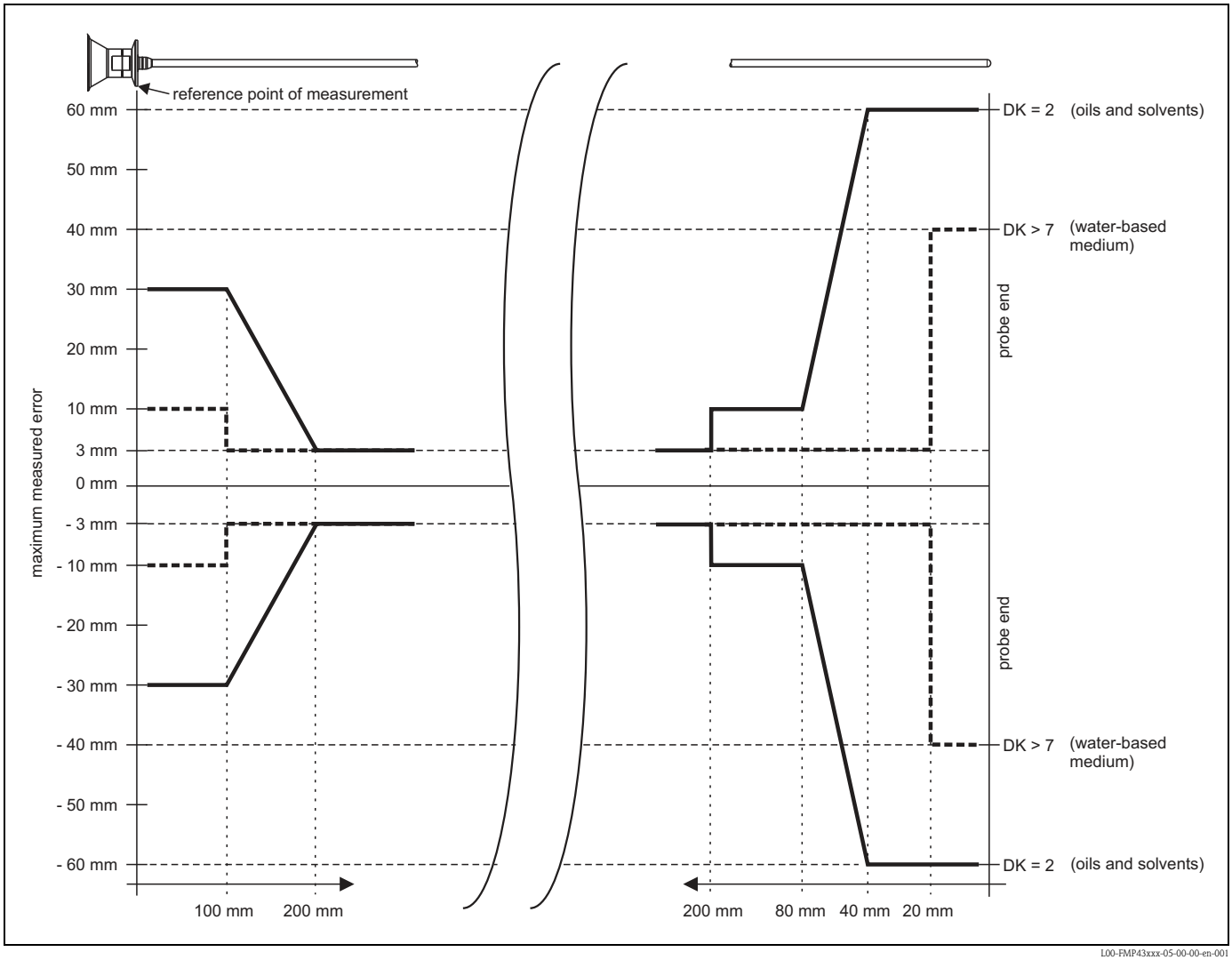

L00-FMP43xxx-05-00-00-en-001

Resolution

- Digital: 1 mm
- Analog: 0.03 % of measuring range

Reaction time

The reaction time depends on the configuration.

Shortest time:
- 2-wire electronics: 1 s
- 4-wire electronics: 0.7 s

Influence of ambient temperature

The measurements are carried out in accordance with EN 61298-3:
- digital output (HART, PROFIBUS PA, FOUNDATION Fieldbus):
  - average T_K: 0.6 mm/10 K, max. ±3.5 mm over the entire temperature range -40 °C to +80 °C

2-wire
- Current output (additional error, in reference to the span of 16 mA):
  - **Zero point (4 mA)**
    average T_K: 0.032 %/10 K, max. 0.35 % over the entire temperature range -40 °C to +80 °C
  - **Span (20 mA)**
    average T_K: 0.05 %/10 K, max. 0.5 % over the entire temperature range -40 °C to +80 °C

4-wire
- Current output (additional error, in reference to the span of 16 mA):
  - **Zero point (4 mA)**
    average T_K: 0.02 %/10 K, max. 0.29 % over the entire temperature range -40 °C to +80 °C
  - **Span (20 mA)**
    average T_K: 0.06 %/10 K, max. 0.89 % over the entire temperature range -40 °C to +80 °C

Operating conditions: Installation

General instructions

Probe selection (→ 4)

Mounting location

- Do not mount the probe in the filling curtain (2).
- Mount the probe at such a distance away from the wall (B) that, in the event of buildup on the wall, there is still a minimum distance of 100 mm between the probe and the buildup.
- Mount the probe as far away as possible from internals.
- Minimum distance from the probe end to the tank floor is 10 mm.
- When installing outdoors, it is recommended that you use a weather protection cover (1) ("Accessories", → 45).

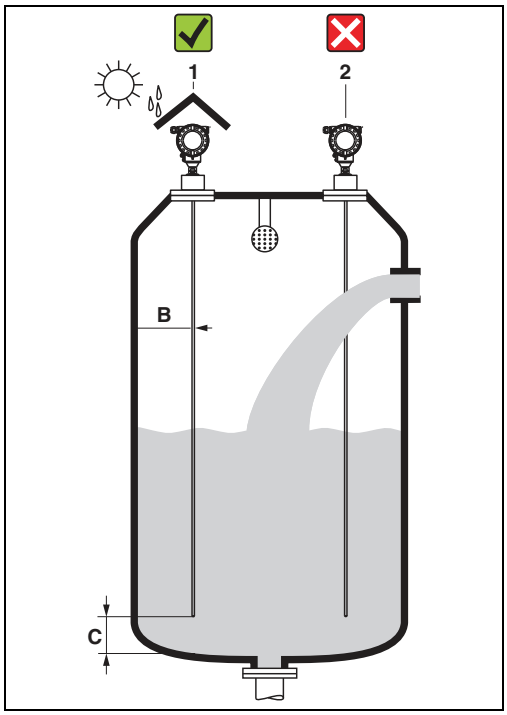

L00-FMP43xxx-17-00-00-xx-001

Tank internals

- If the distance to the internals is < 300 mm, "mapping" must be carried out, and the measurement capability may be restricted.
- During operation, the probe must not touch any internals within the measuring range.

Optimization options

- Interference echo suppression: measurement can be optimized by electronically tuning out interference echoes.

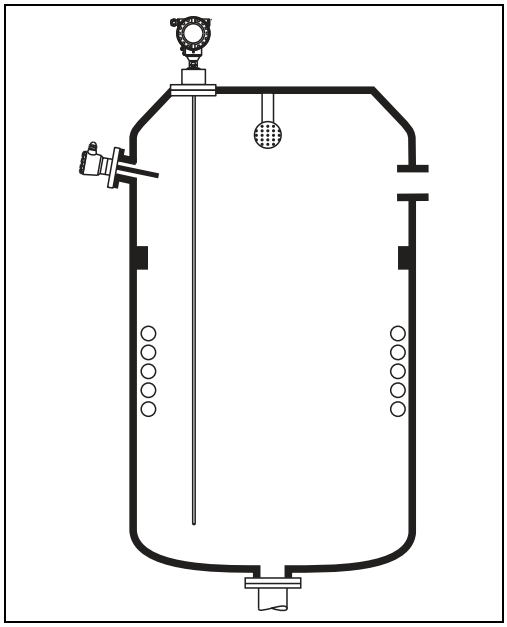
L00-FMP43xxx-17-00-00-xx-002

Note!
You must ensure that the probe does not come into contact with the container wall, container bottom and tank internals.

Cleaning of the probe

Installation close to tank wall

By installing the probe close to the tank wall, the cleaning effect is improved in cases where a spray ball is used. The cleaning jet is deflected against the tank wall and onto the probe. This means that those parts of the probe are cleaned which would normally not be reached by the spray ball jet. If the probe is positioned in this way, only one spray ball is needed.

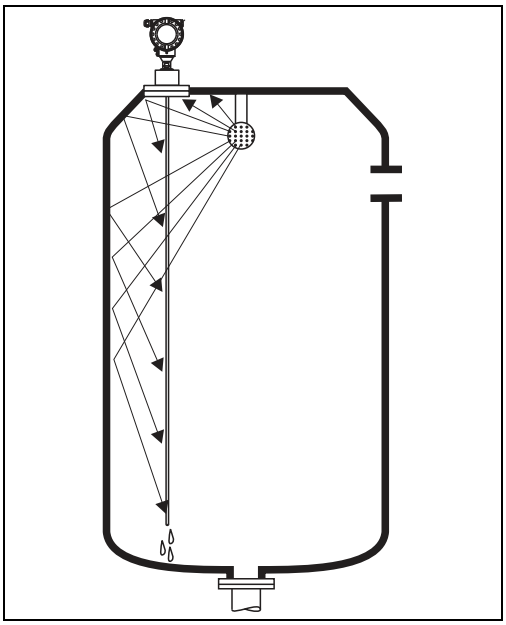

L00-FMP43xxx-17-00-00-xx-003

Installation in the center of the tank

If the probe is mounted in the center of the tank, it may be necessary to use a second spray ball. The spray balls should then be mounted to the left and right of the probe.

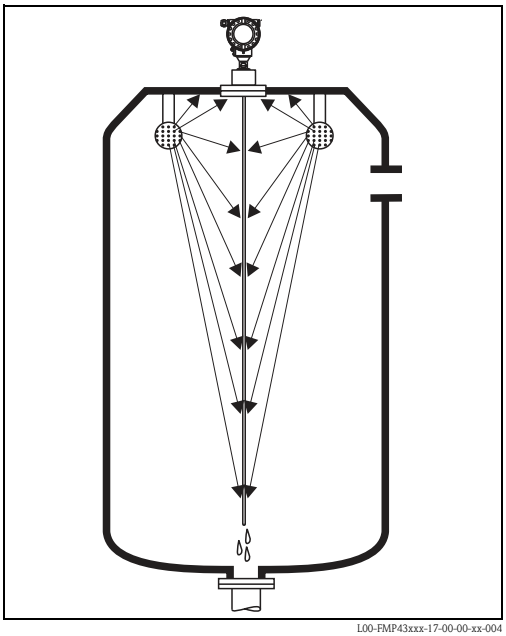

L00-FMP43xxx-17-00-00-xx-004

Special instructions

When installing in tanks with agitator, observe the lateral loading capacity of rod probes:
- 10 Nm with 316L (1.4435)
- 16 Nm with Hasteloy C22 (on request).

The formula for calculating the bending torque M impacting on the probe:

$$M = c_W \cdot \frac{\rho}{2} \cdot v^2 \cdot d \cdot L \cdot (L_N - 0.5 \cdot L)$$

with
c_w : Friction factor
ρ [kg/m^3]: Density of the medium
v [m/s]: Velocity of the medium perpendicular to the probe rod
d [m]: Diameter of the probe rod (8 mm)
L [m]: Level
L_N [m]: Probe length

Calculation example

Friction factor [c_w]	0.9 (on the assumption of a turbulent current (high Reynolds number))
Density [ρ] in kg/m^3	1000 (e.g. water)
Probe diameter [d] in m	0.008
L = L_N (worst case)	

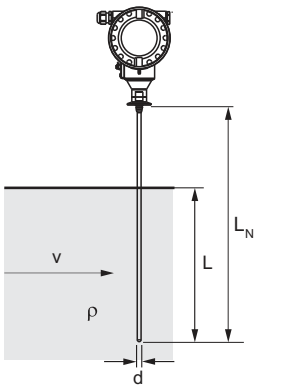

L00-FMP43xxx-16-00-00-xx-003

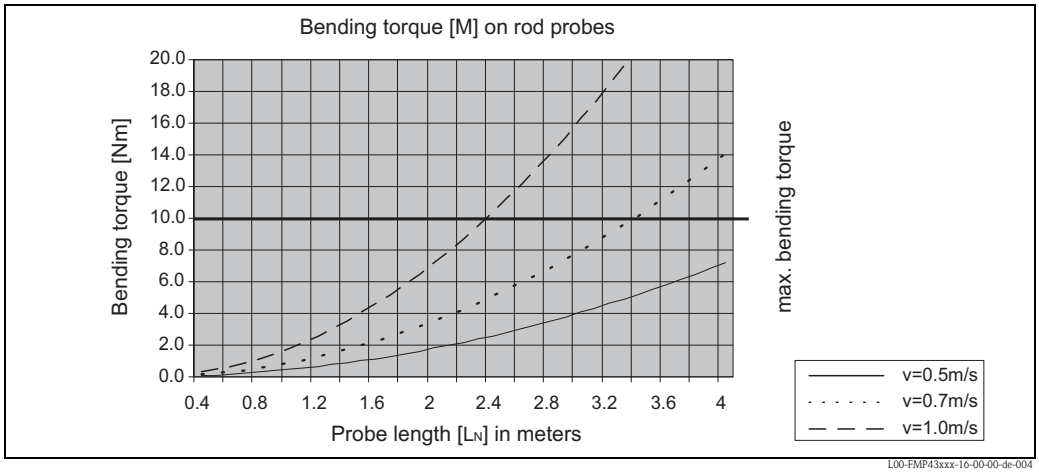

L00-FMP43xxx-16-00-00-de-004

When installing in stirring tanks, observe lateral load-bearing capacity of rod probes.
Possibly check whether a non-contact process, Ultrasonic or Level-Radar would not be better suited, above all if the stirrer generates large mechanical loads on the probe.

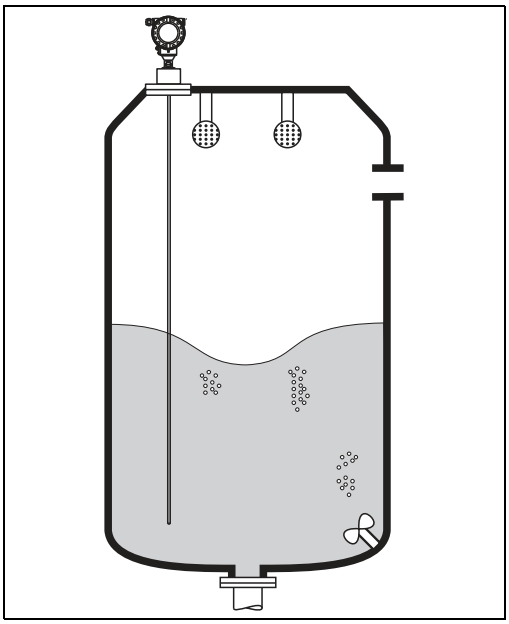

L00-FMP43xxx-17-00-00-xx-005

Notes on special installation situations

Installation at an angle

- For mechanical reasons, the probe should be installed as vertically as possible.
- With inclined installations the probe length has to be adjusted in dependence to the installation angle.
  - up to 1 m = 30°
  - up to 2 m = 10°
  - up to 4 m = 5°.

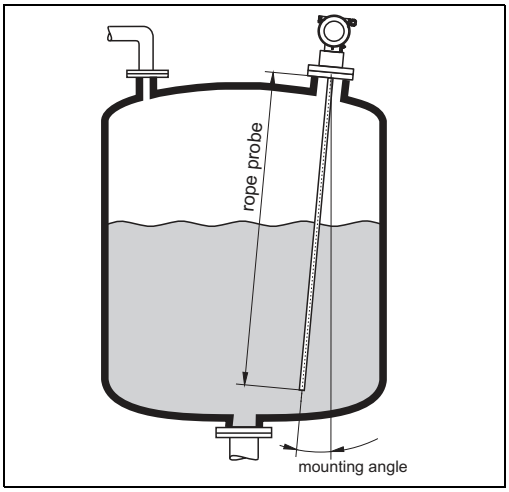

L00-FMP4xIxx-17-00-00-en-048

Installation for difficult to access process connections

Installation with separate housing

- The Wall and pipe bracket is contained in the scope of delivery and is already mounted.
- Mount the housing on the wall or pipe (vertically or horizontally, as required) as shown in the diagram.
- The wall bracket can also be used for mounting in display panels. For the cutout, please observe the dimensions, → 📄 25.

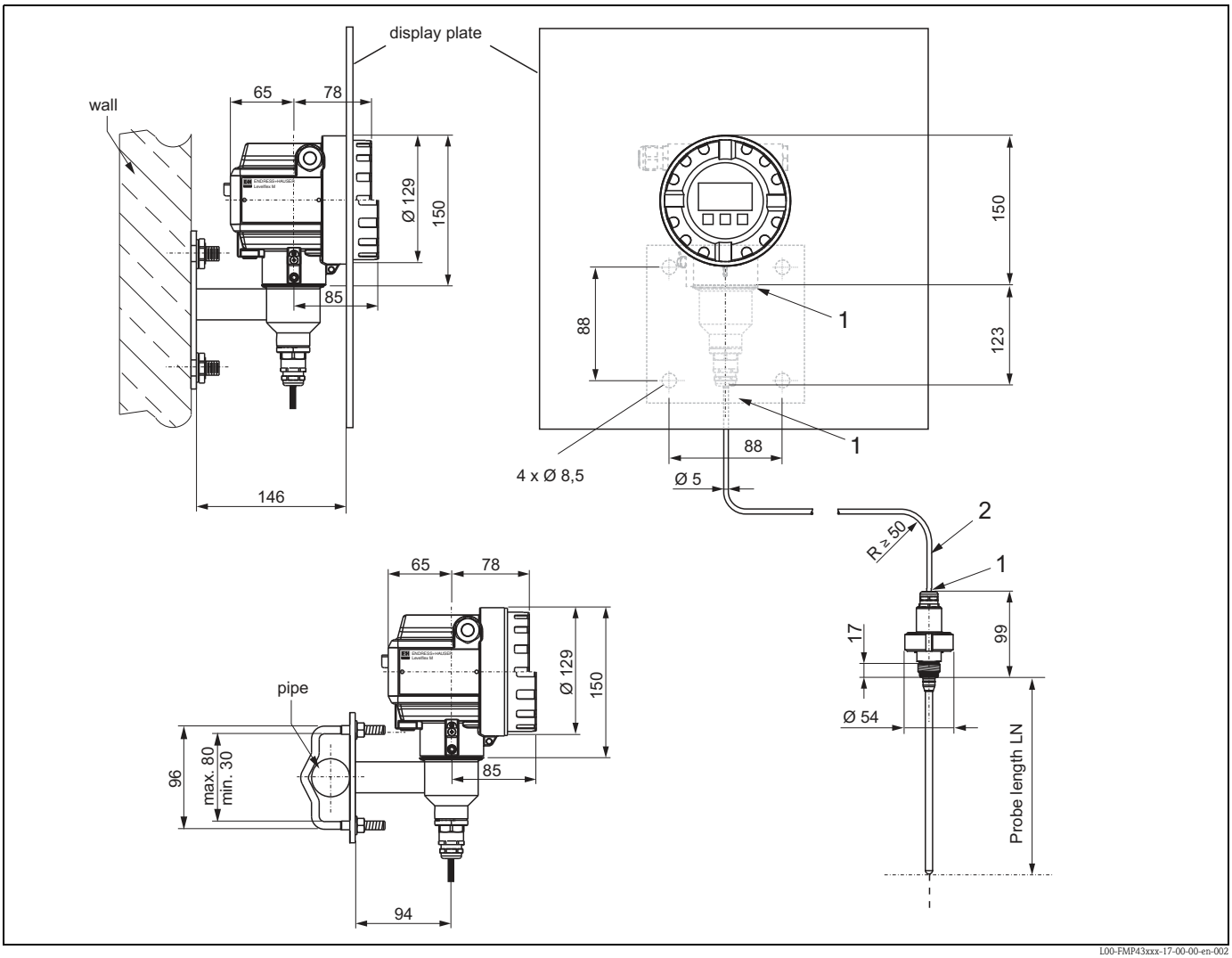

L00-FMP43xxx-17-00-00-en-002

Note!
The cable can not be disassembled at these points (1). The cable must not be kinked.

The ambient temperature for the connecting line (2) between the probe and electronics can be max. 105 °C. The version with remote electronics consists of the probe, a connecting cable and the housing. If they are ordered as a set, they are assembled on delivery.

Operating conditions: Environment

Ambient temperature range

Ambient temperature for electronics: -40 °C to +80 °C. The functionality of the LCD display may be limited for temperatures T_a < -20 °C and T_a > +60 °C. A weather protection cover should be used for outdoor operation if the device is exposed to direct sunlight.

Ambient temperature limits

If the temperature (T_2) at the process connection is above 80 °C, the permitted ambient temperature (T_1) decreases as per the following diagram (temperature derating):

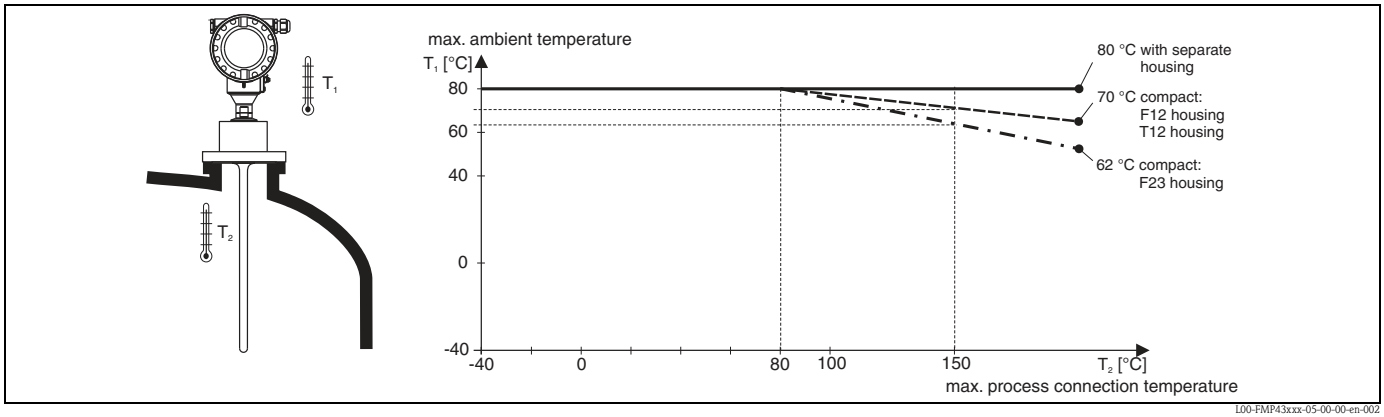

L00-FMP43xxx-05-00-00-en-002

Storage temperature

-20 °C to +80 °C

Climate class

DIN EN 60068-2-38 (test Z/AD)

Degree of protection

- with closed housing tested according to:
  - all housings:
    - IP68, NEMA6P (24 h at 1,83 m under water)
    - IP66, NEMA4X
  - F23 housing: additionally IP69K in connection with M20, G½" and NPT½" cable entries.
- with open housing: IP20, NEMA1 also ingress protection of the display)

Note!
Degree of protection IP68 NEMA6P applies for M12 PROFIBUS PA plugs only when the PROFIBUS cable is plugged in.

Vibration resistance

DIN EN 60068-2-64 / IEC 68-2-64: 20 to 2000 Hz, 1 $(m/s^2)^2/Hz$

Cleaning of the probe

Depending on the application, contamination or build-up can accumulate on the probe. A thin, even layer only influences measurements slightly. Thick layers can dampen the signal and then reduce the measuring range. Severe, uneven build-up, adhesion e.g. through crystallization, can lead to incorrect measurement. In this case, we recommend that you use a non-contact measuring principle, or check the probe regularly for soiling.

Electromagnetic compatibility (EMC)

Electromagnetic compatibility to EN 61326 and NAMUR Recommendation EMC (NE21). Details are provided in the Declaration of Conformity. A standard installation cable is sufficient if only the analog signal is used. Use a shielded cable when working with a superimposed communications signal (HART).

When installing the probes in metal and concrete tanks and when using a coax probe:
- Interference emission to EN 61326 - x series, electrical equipment Class B.
- Interference immunity to EN 61326 - x series, requirements for industrial areas and NAMUR Recommendation NE21 (EMC)

The measured value can be affected by strong electromagnetic fields when installing rod and rope probes without a shielding/metallic wall, e.g. plastic, and in wooden silos.
- Interference emission to EN 61326 - x series, electrical equipment Class A.
- Interference Immunity: the measured value can be affected by strong electromagnetic fields.

Operating conditions: Process

Process temperature range

The maximum permitted temperature at the process connection (see figure measuring point) is determined by the O-ring material ordered:

O-ring material	Min. temperature	Max. temperature	
FFKM (Kalrez)	-20 °C	+150 °C	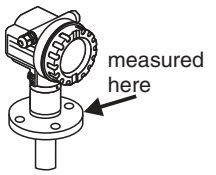
EPDM	-20 °C	+130 °C	

Process pressure

Pmax = 16 bar.
The specified range may be reduced by the selection of process connection (→ 27).
The pressure rating (PN) specified on the flanges refers to a reference temperatur of 20 °C, for ASME flanges 100 °F. Observe pressure-temperature dependency.

Please refer to the following standards for the pressure values permitted for higher temperatures:
- EN 1092-1 : 2001 Tab.18
  With regard to their temperature stability properties, the materials 1.4404 and 1.4435 are grouped under 13E0 in EN 1092-1 Tab.18. The chemical composition of the two materials can be identical.
- ASME B 16.5a - 1998 Tab. 2-2.2 F316
- ASME B 16.5a - 1998 Tab. 2.3.8 N10276
- JIS B 2220

Dielectric constant

$\varepsilon r \geq 1.6$

Mechanical construction

Design, dimensions

Housing dimensions

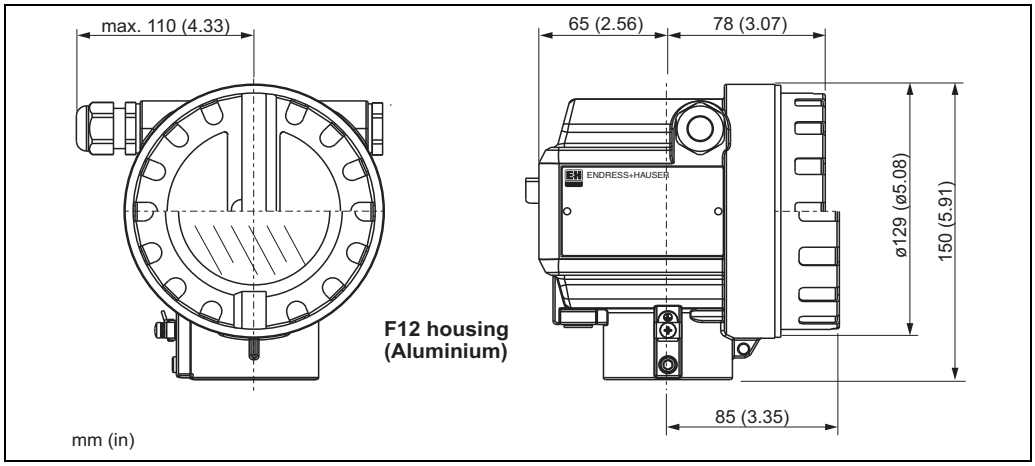

L00-F12xxxx-06-00-00-en-001

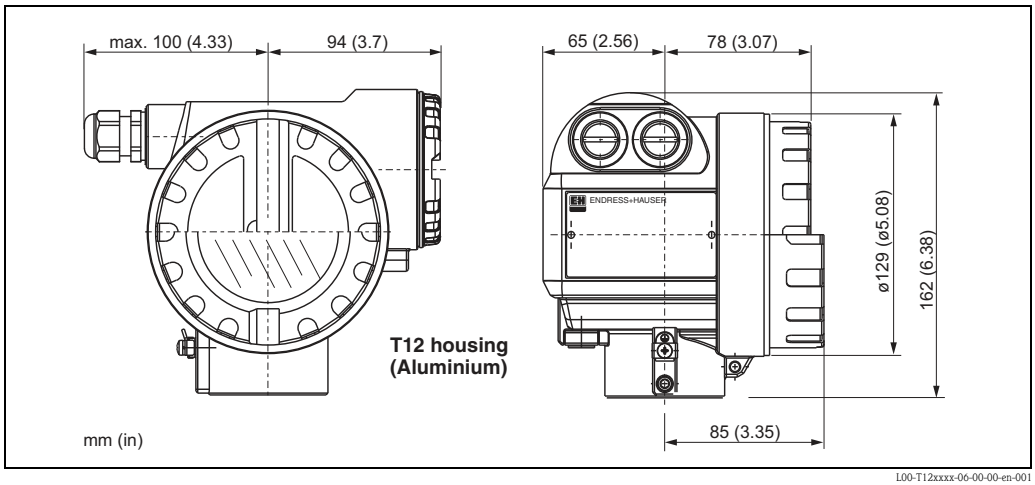

L00-T12xxxx-06-00-00-en-001

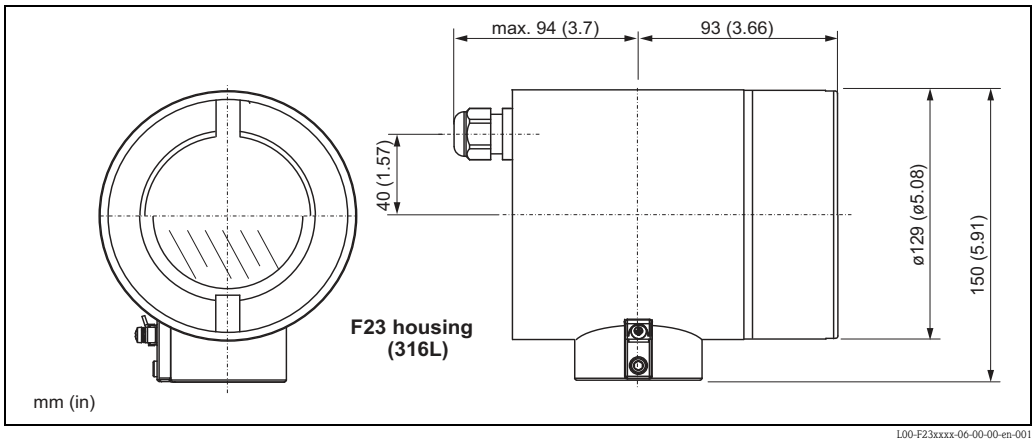

L00-F23xxxx-06-00-00-en-001

Probes - Dimensions and materials

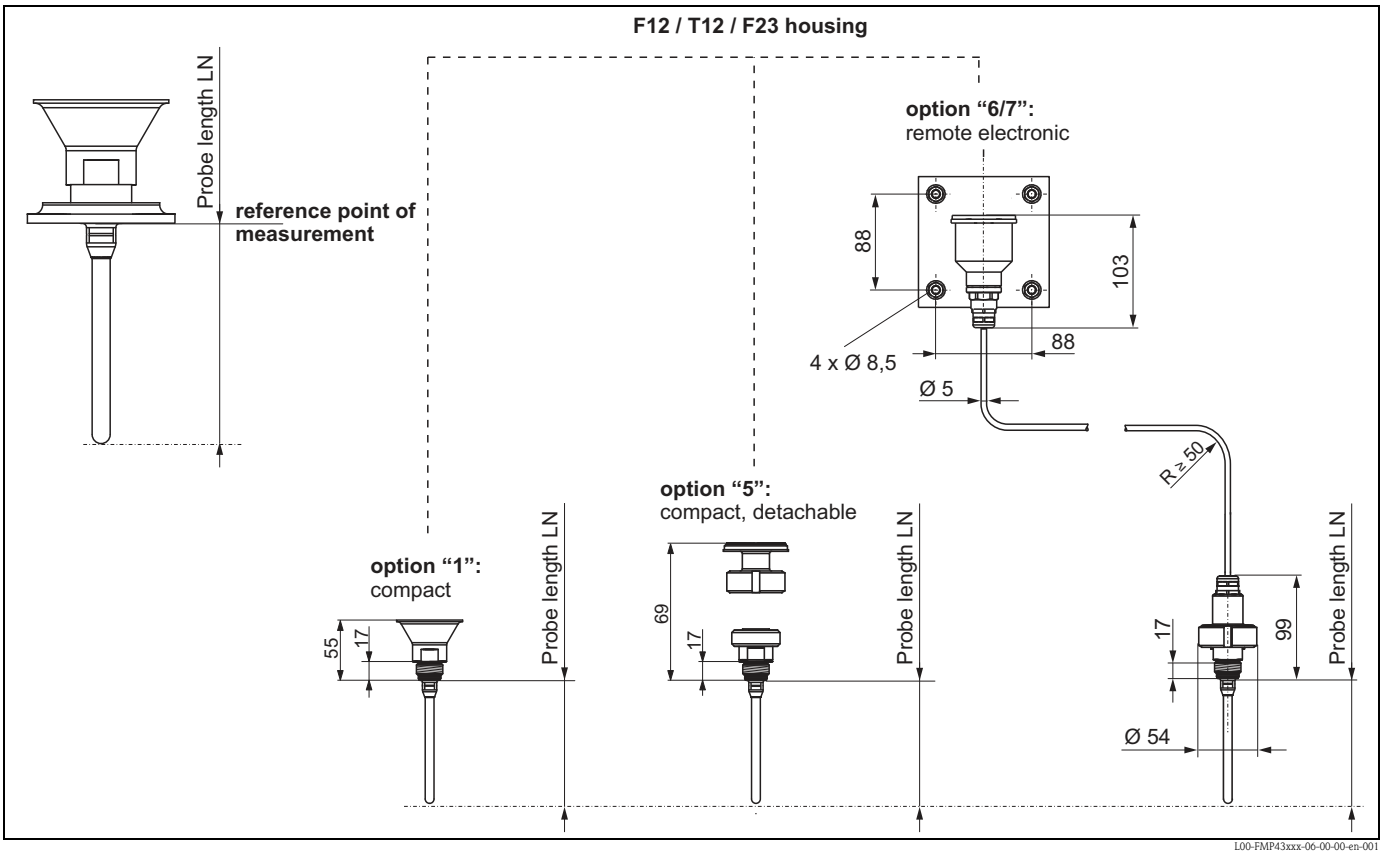

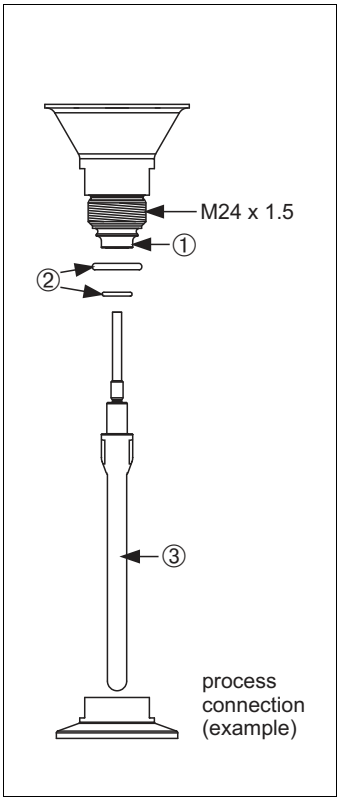

① Insulator

Material	Approval
Ketron PEEK LSG	FDA, 3A, USP Cl. VI

② O-ring (see Feature 30 in "Ordering information"

Material	Approval	Temperature range	Option
EPDM Freudenberg 70 EPDM 291	FDA, 3A, USP Cl. VI	-20 °C to +130 °C (functional) -20 °C to +121 °C (3A Class. II, USP Cl. VI)	5
FFKM DuPont Kalrez 6221		-20 °C to +150 °C (functional) -20 °C to +149 °C (3A Class. I, USP Cl. VI)	6

③ Probe (see Feature 20 in "Ordering information)

Material	Version	Option
316L (1.4435)	0.76 µm mechanically polished	K, M
	0.38 µm electropolished	S, T
Hastelloy C22	Special version available on request	Y

Process connections - Dimensions and materials

Endress+Hauser supplies DIN/EN flanges made of stainless steel according to AISI 316L (DIN/EN material number 1.4404 or 1.4435). With regard to their temperature stability properties, the materials 1.4404 and 1.4435 are grouped under 13EO in EN 1092-1 Tab. 18. The chemical composition of the two materials can be identical.

Process connection	Designation	Versions	Approvals	Option
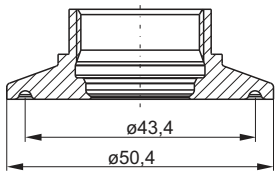	Tri-clamp ISO2852 DN25-38 (1 to 1-½")* P_{max} = 16 bar Material: 316L (1.4435)	■ 0.76 µm ■ 0.38 µm electropolished	■ 3A ■ EHEDG ■ ASME-BPE compliant	TCJ
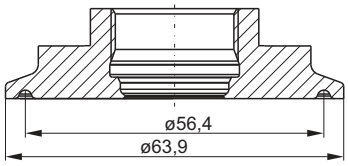	Tri-clamp ISO2852 DN40-51 (2")* P_{max} = 16 bar Material: 316L (1.4435)			TDJ
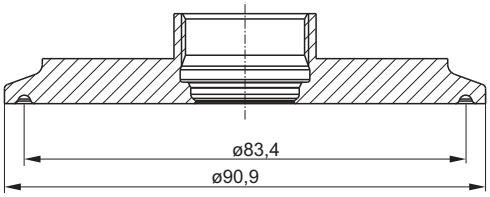	Tri-clamp ISO2852 DN70-76.1 (3") P_{max} = 10 bar Material: 316L (1.4435)			TFJ
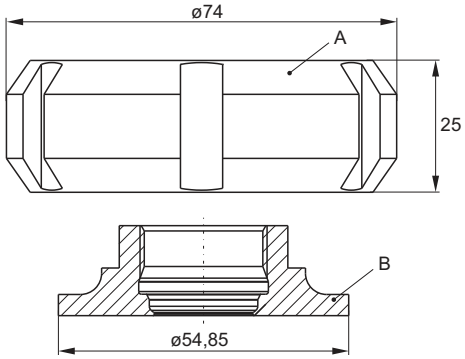	SMS 1-½" PN25 with slotted nut* P_{max} = 16 bar Material: A= 1.4307 B= 316L (1.4435)	■ 0.76 µm	■ EHEDG	T7J
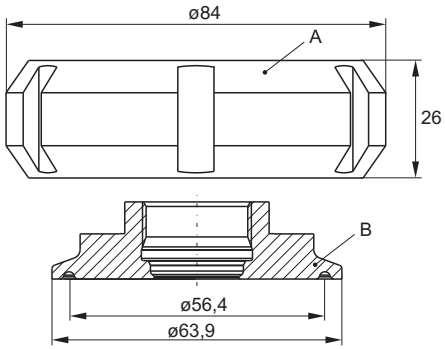	SMS 2" PN25 with slotted nut* P_{max} = 16 bar Material: A= 1.4307 B= 316L (1.4435)			TXJ

Process connection	Designation	Versions	Approvals	Option
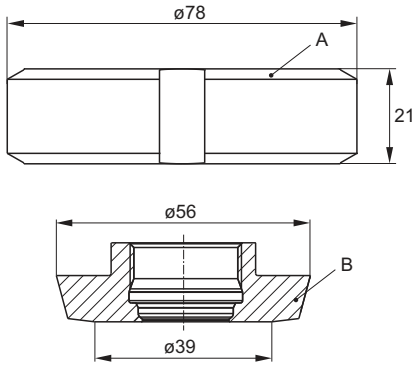	DIN11851 DN40 PN40 with slotted nut F40* P_{max} = 16 bar Material: A= 1.4307 B= 316L (1.4435)	■ 0.76 µm	■ EHEDG	MQJ
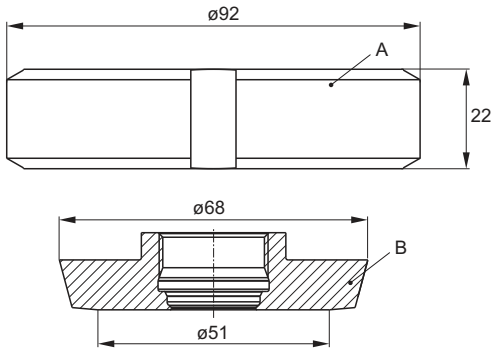	DIN11851 DN50 PN40 with slotted nut F50* P_{max} = 16 bar Material: A= 1.4307 B= 316L (1.4435)			MRJ
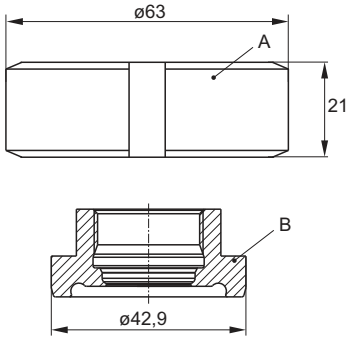	DIN11864-1 A DN25 Pipe DIN11850 with slotted nut F25* P_{max} = 16 bar Material: A= 1.4307 B= 316L (1.4435)	■ 0.76 µm ■ 0.38 µm electropolished		MAJ
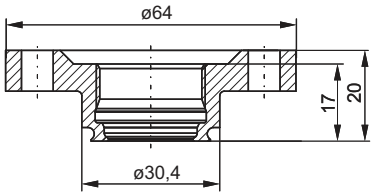	NEUMO BioControl DN25 PN16* P_{max} = 16 bar Material: 316L (1.4435)			S1J
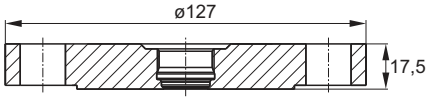	1-1/2" 150lbs RF Flange ANSI B16.5* P_{max} = 16 bar Material: 316L	■ 0.76 µm		AEJ
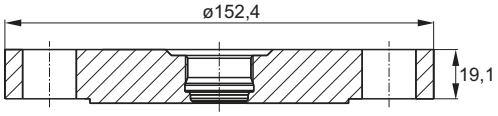	2" 150lbs RF Flange ANSI B16.5* P_{max} = 16 bar Material: 316L			AFJ

Process connection	Designation	Versions	Approvals	Option
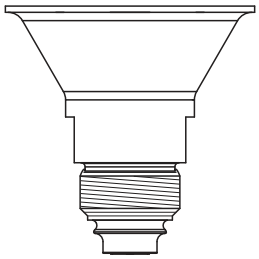	Thread M24 x 1.5			U1J
	You need the following weld-in adapter:			
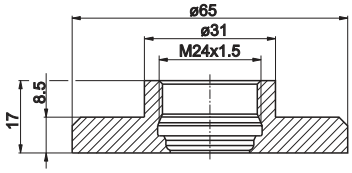	Weld-in adapter order number: 71041381 P_{max} = 16 bar Material: 316L (1.4435)	Accessory: weld-in adapter ▪ 0.76 µm		

General information on flanges

The surface roufhness of the surface in contact with the medium, including the sealing surface of the flanges (all standards) made of Hastelloy C, Monel or Tantas, is Rz 3.2.
Lower surface roughness levels are available on request.

Tolerance of probe length

Tolerance	Rod length
+0 / -3 mm	< 1000 mm
+0 / -5 mm	1000 to < 4000 mm

Weight

Part	Weight
Housing T12	approx. 2.7 kg
Housing F12	approx. 1.8 kg
Housing F23	approx. 5 kg
Probe compact	approx. 0.7 kg
Probe compact, detachable	approx. 0.8 kg
Probe remote	approx. 2.1 kg
Probe rod	approx. 0.4 kg/m

Material (not in contact with process)

T12 and F12 housing (seawater-resistant*, powder-coated)

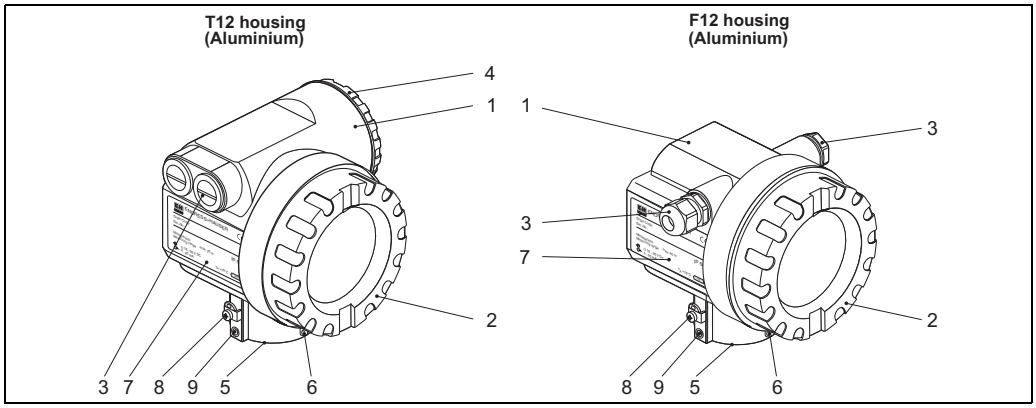

L00-x12xxxx-16-00-00-en-001

Pos.	Part	Material	
1	T12 and F12 housing	AlSi10Mg	
2	Cover (Display)	AlSi10Mg	
	Sealing	Fa. SHS: EPDM 70pW FKN	
	Window	ESG-K-Glass (Toughened safety glass)	
	Sealing of the glass	Silicone sealing compound Gomastit 402	
3	Sealing	Fa. SHS: EPDM 70 pW FKN	Trelleborg: EPDM E7502
	Cable gland	Polyamid (PA), CuZn nickel-plated	
	Plug	PBT-GF30	1.0718 galvanized
		PE	3.1655
	Adapter	316L (1.4435)	AlMgSiPb (anodized)
4	Cover (Connection compartment)	AlSi10Mg	
	Sealing	Fa. SHS: EPDM 70pW FKN	Trelleborg: EPDM E7502/E7515
	Clamp	Screws: A4; Clamp: Ms nickel-plated; Spring washer: A4	
5	Sealing ring	Fa. SHS: EPDM 70pW FKN	Trelleborg: EPDM E7502/E7515
6	Tag	VA	
	Rope	VA	
	Crimp sleeve	Aluminium	
7	Nameplate*	304 (1.4301)	
	Groove pin*	A2	
8	Ground terminal*	Screws: A2; Spring washer: A4; Clamp: 304 (1.4301); Holder: 301 (1.4310)	
9	Screws*	A2-70	

* Seawater-resistant on request (complete in 316L (1.4404)).

F23 housing (seawater-resistant*, corrosion-resistant)

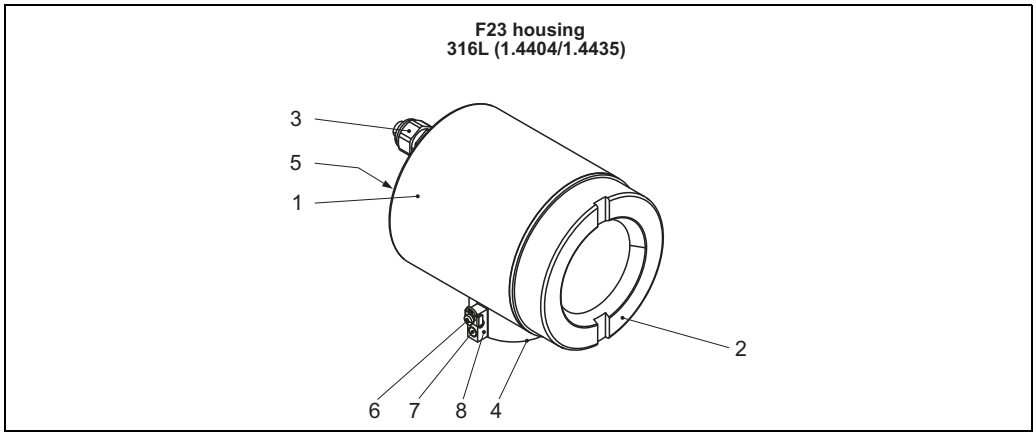

Pos.	Part	Material	
1	F23 housing	Housing body: 316L (1.4404); Sensor neck: 316L (1.4435); earth connection block: 316L (1.4435)	
2	Cover	316L (1.4404)	
	Sealing	Fa. SHS: EPDM 70pW FKN	
	Window	ESG-K-Glass (Toughened safety glass)	
	Sealing of the glass	Silicone sealing compound Gomastit 402	
3	Sealing	Fa. SHS: EPDM 70pW FKN	Trelleborg: EPDM E7502
	Cable gland	Polyamid (PA), CuZn nickel-plated	
	Plug	PBT-GF30	1.0718 galvanized
		PE	3.1655
	Adapter	316L (1.4435)	
4	Sealing ring	Fa. SHS: EPDM 70pW FKN	Trelleborg: EPDM E7502
5	Nameplate*	304 (1.4301)	
6	Grounding terminal*	Screws: A2; Spring washer: A4; Clamp: 304 (1.4301); Holder: 301 (1.4310)	
7	Screw*	A2-70	
8	Tag	VA	
	Rope	VA	
	Crimp sleeve	Aluminium	

* Seawater-resistant on request (complete in 316L (1.4404)).

Wall and pipe bracket

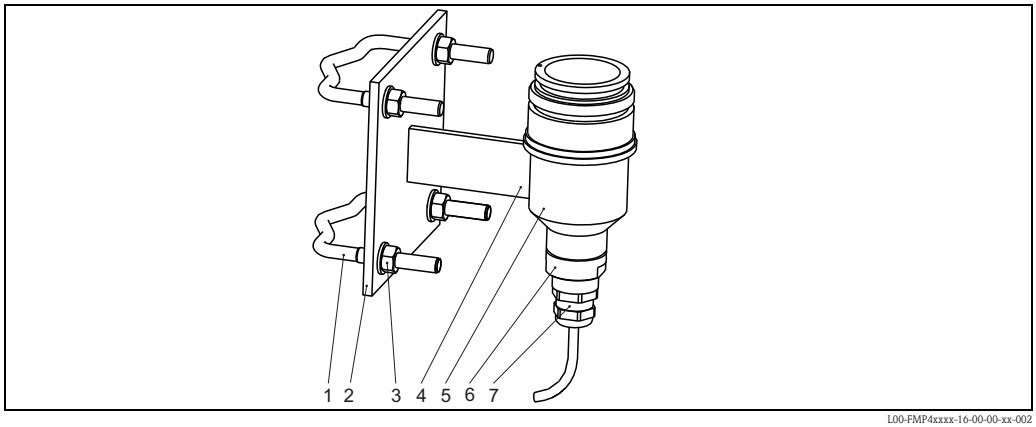

L00-FMP4xxxx-16-00-00-xx-002

Pos.	Part	Material
1	Bracket	304 (1.4301)
2	Disc	304 (1.4301)
3	Screw nut	A4
	Washer	A2
4	Bar	304 (1.4301)
5	Housing adapter	316L (1.4435)
6	Thread adapter	304 (1.4301)
7	Cable gland	CuZn nickel-plated

Connecting parts

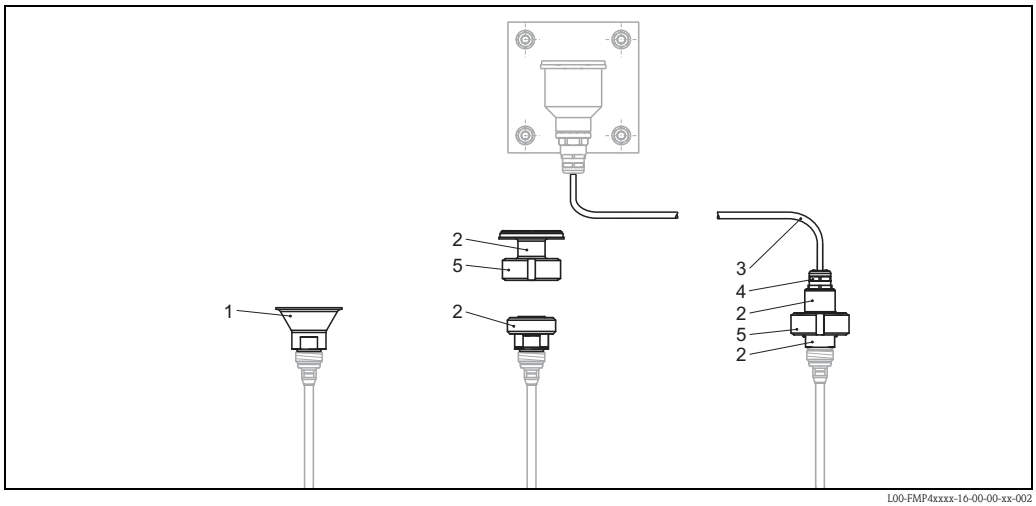

L00-FMP4xxxx-16-00-00-xx-002

Pos.	Part	Material
1	Adapter (compact)	304 (1.4301)
2	Adapter (separable)	304 (1.4301)
3	Cable	FEP
4	Cable gland	CuZn nickel-plated
5	Counter nut	304 (1.4301)

Material (in contact with process)

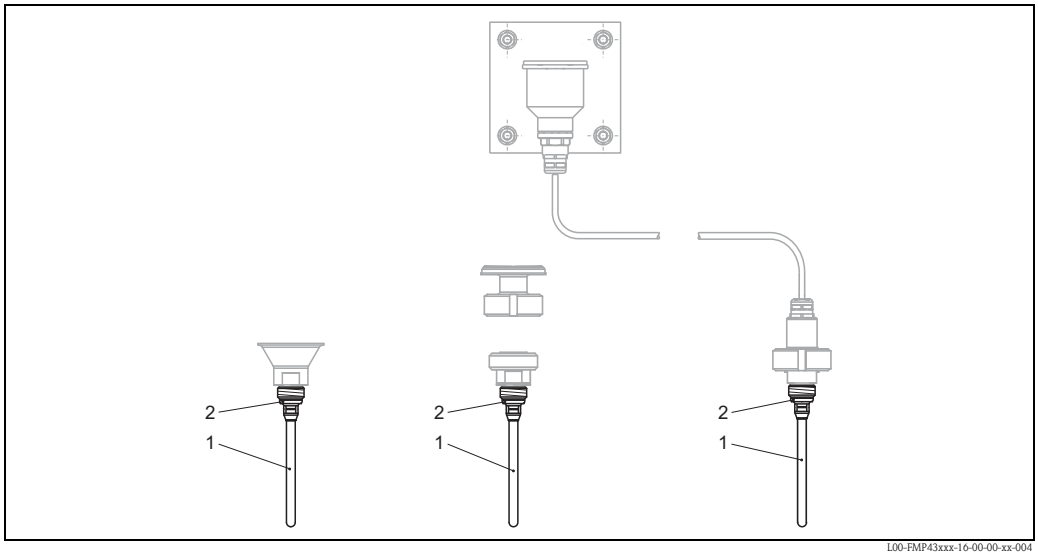

L00-FMP43xxx-16-00-00-xx-004

Pos.	Part	Material
1	Probe	316L (1.4435)
2	O-Ring	EPDM Freudenberg 70 EPDM 291
		FFKM DuPont Kalrez 6221
	Isulator	Ketron PEEK LSG

Process connection

See "Ordering information", → 📄 42.

Probe

See "Ordering information", → 📄 42.

Note!
The modular structure of the probe makes a simple possible exchanges of the process seals, the probe rod and the process coupling ring.

Human interface

Operation concept

The display of the process value and the configuration of the Levelflex occur locally by means of a large 4-line alphanumeric display with plain text information. The guided menu system with integrated help texts ensures a quick and safe commissioning.
To access the display the cover of the electronic compartment may be removed even in hazardous area (IS and XP).
Remote commissioning, including documentation of the measuring point and in-depth analysis functions, is supported via FieldCare, the graphical operating software for Endress+Hauser time-of-flight systems.

Display elements

Liquid crystal display (LCD):

Four lines with 20 characters each. Display contrast adjustable through key combination.

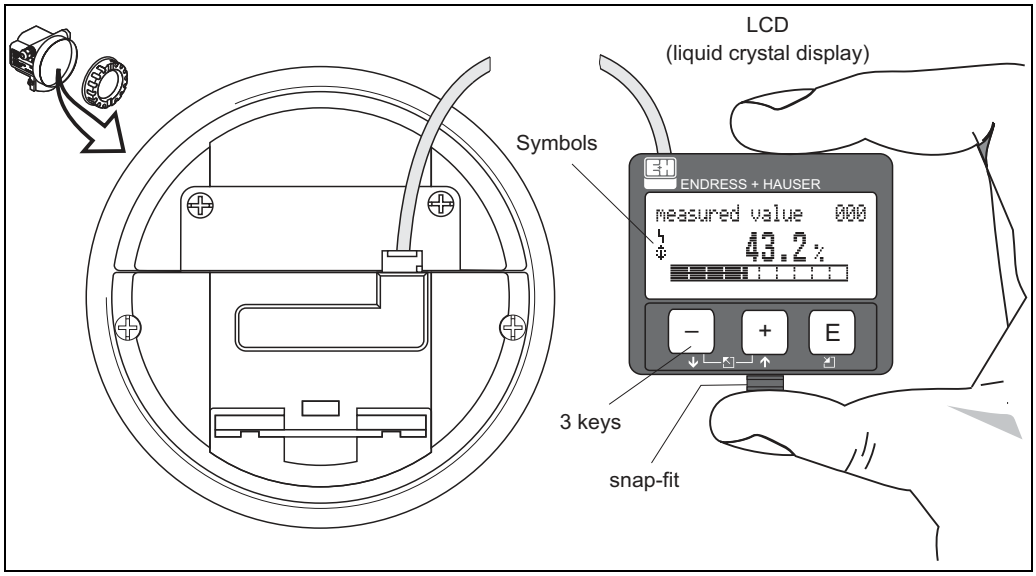

L00-FMxxxxxx-07-00-00-en-001

The VU331 LCD display can be removed to ease operation by simply pressing the snap-fit (see graphic above). It is connected to the device by means of a 500 mm cable.

The following table describes the symbols that appear on the liquid crystal display:

Symbol	Meaning
	ALARM_SYMBOL This alarm symbol appears when the device is in an alarm state. If the symbol flashes, this indicates a warning.
	LOCK_SYMBOL This lock symbol appears when the device is locked, i.e. if no input is possible.
	COM_SYMBOL This communication symbol appears when a data transmission via e.g. HART, PROFIBUS PA or FOUNDATION Fieldbus is in progress.
	SIMULATION_SWITCH_ENABLE This communication symbol appears when simulation in FOUNDATION Fieldbus is enabled via the DIP switch.

Operating elements

The operating elements are located inside the housing and are accessible for operation by opening the lid of the housing.

Function of the keys

Key(s)	Meaning
[+] or [↑]	Navigate upwards in the selection list. Edit numeric value within a function.
[−] or [↓]	Navigate downwards in the selection list. Edit numeric value within a function.
[Esc] or [←]	Navigate to the left within a function group.
[E]	Navigate to the right within a function group, confirmation.
[+] and [E] or [−] and [E]	Contrast settings of the LCD.
[+] and [−] and [E]	Hardware lock / unlock After a hardware lock, an operation of the device via display or communication is not possible! The hardware can only be unlocked via the display. An unlock parameter must be entered to do so.

Onsite operation

Operation with VU331

The LC-Display VU331 allows configuration via 3 keys directly at the device. All device functions can be set through a menu system. The menu consists of function groups and functions. Within a function, application parameters can be read or adjusted. The user is guided through a complete configuration procedure.

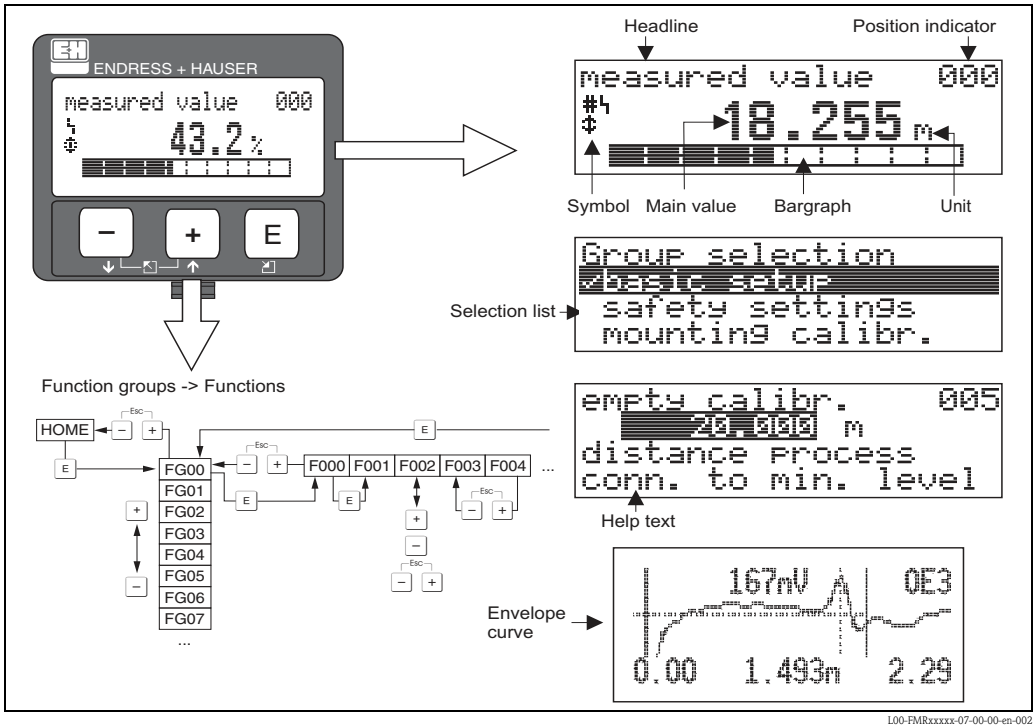

Remote operation

The Levelflex M can be remotely operated via HART, PROFIBUS PA and FOUNDATION Fieldbus. Onsite adjustments are also possible.

Operation with FieldCare

FieldCare is an Endress+Hauser Plant Asset Management Tool based on FDT technology. You can use FieldCare to configure all your Endress+Hauser devices, as well as devices from other manufacturers that support the FDT standard. Hardware and software requirements you can find on the internet:
www.endress.com → select your country → search: FieldCare → FieldCare → Technical Data.

FieldCare supports the following functions:
- Online configuration of transmitters
- Signal analysis via envelope curve
- Tank linearization
- Loading and saving of device data (upload/download)
- Documentation of the measuring point

Connection options:
- HART via Commubox FXA195 and the USB port of a computer
- PROFIBUS PA via segment coupler and PROFIBUS interface card
- Commubox FXA291 with ToF Adapter FXA291 via service interface

Menu-guided commissioning

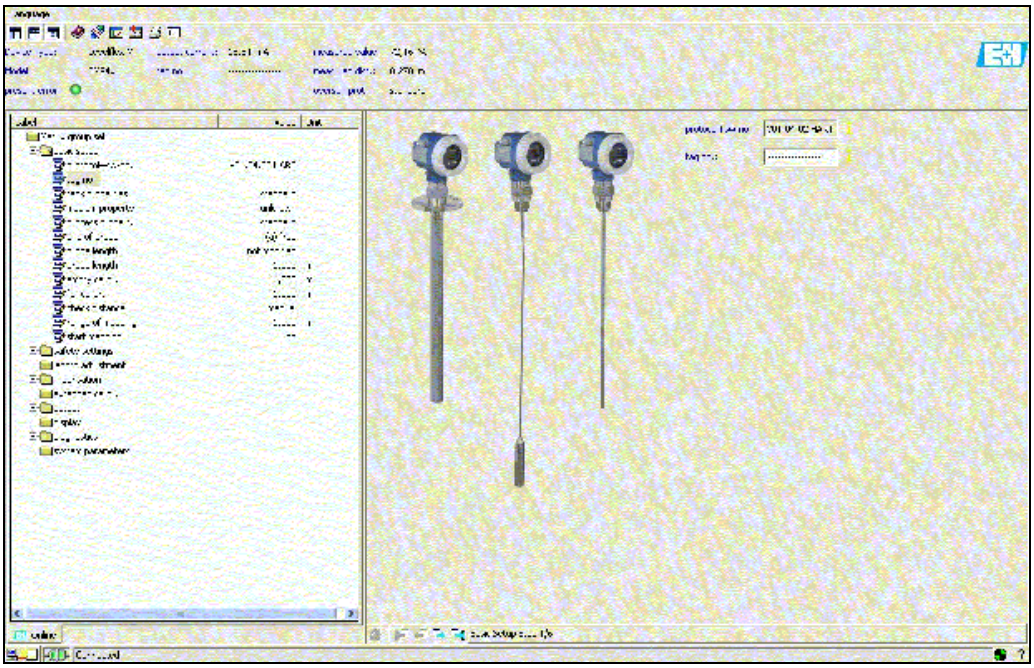

L00-FMP4xxxx-20-00-00-en-001

Signal analysis via envelope curve

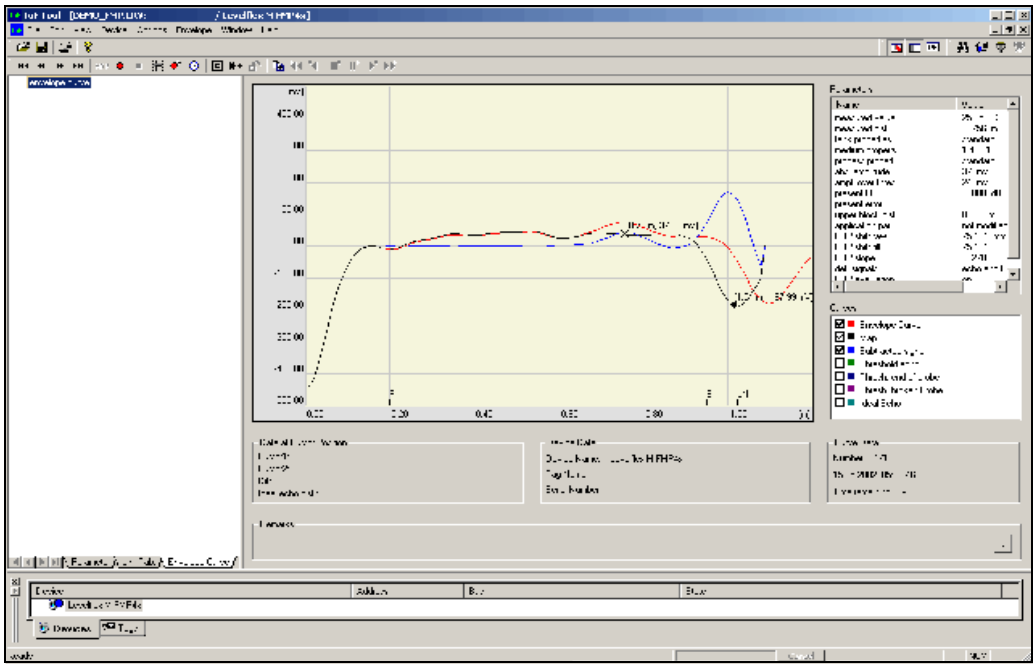

L00-FMP4xxxx-20-00-00-en-007

Tank linearization

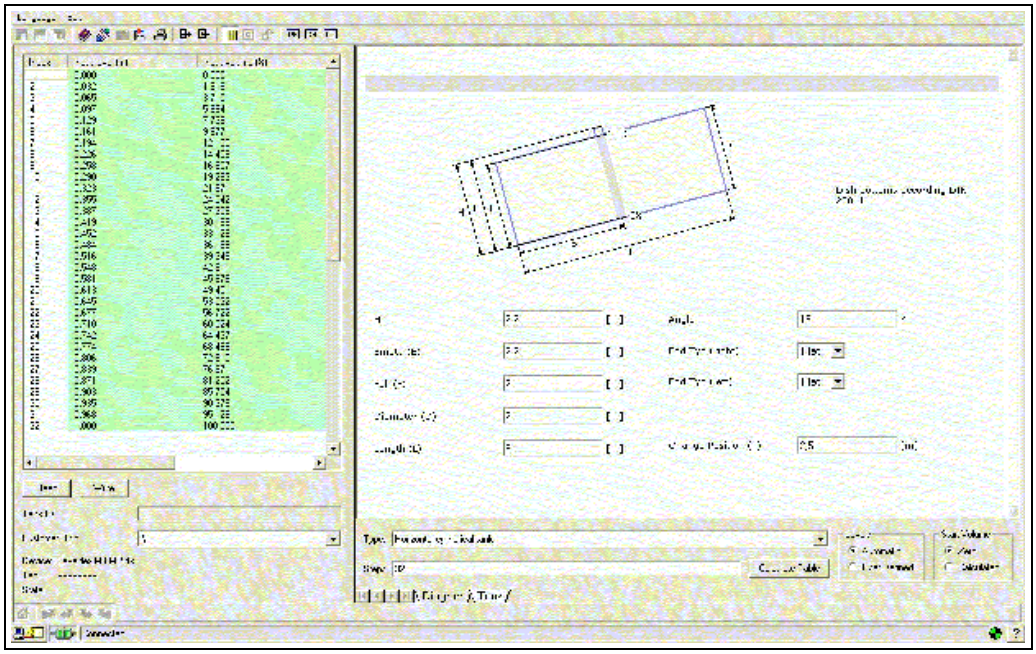

L00-fmp-lxxx-20-00-00-en-041

Operation with NI-FBUS Configurator (only FOUNDATION Fieldbus)

The NI-FBUS Configurator is an easy-to-use graphical environment for creating linkages, loops, and a schedule based on the FOUNDATION fieldbus concepts.

You can use the NI-FBUS Configurator to configure a fieldbus network as follows:
- Set block and device tags
- Set device addresses
- Create and edit function block control strategies (function block applications)
- Configure vendor-defined function and transducer blocks
- Create and edit schedules
- Read and write to function block control strategies (function block applications)
- Invoke Device Description (DD) methods
- Display DD menus
- Download a configuration
- Verify a configuration and compare it to a saved configuration
- Monitor a downloaded configuration
- Replace devices
- Save and print a configuration

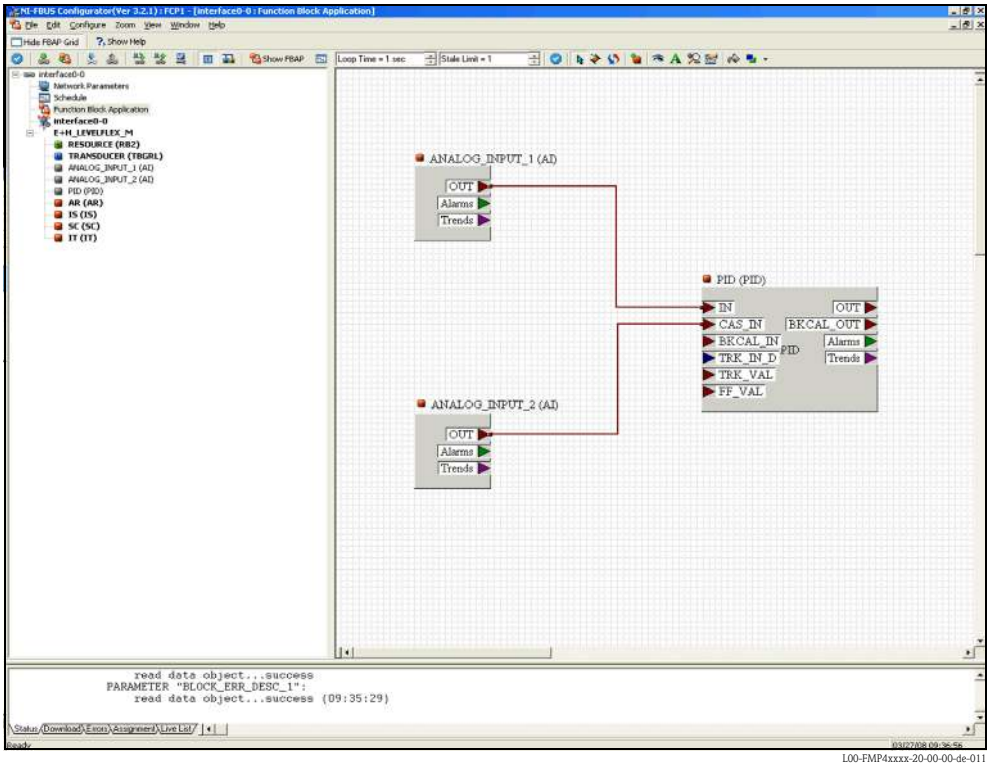

L00-FMP4xxxx-20-00-00-de-011

Operation with the Field Communicator 375, 475

With the Field Communicator 375, 475, you can configure all the device functions via menu operation.

Note!
Further information on the HART handheld unit is given in the respective operating manual included in the transport bag of the Field Communicator 375, 475.

Certificates and approvals

CE mark

The measuring system meets the legal requirements of the applicable EC guidelines. These are listed in the corresponding EC Declaration of Conformity together with the standards applied. Endress+Hauser confirms successful testing of the device by affixing to it the CE mark.

Ex approval

The devices are certified for use in hazardous areas. The safety instructions to be observed are enclosed and referenced on the nameplate:

- Europe: EC type-examination certificate, Safety Instructions XA
- USA: FM Approval, Control Drawing
- Canada: CSA Certificate of Compliance, Control Drawing
- China: NEPSI Explosion Protection Certificate of Conformity, Safety Instructions XA
- Japan: TIIS Certificate for Ex-apparatus

Correlation of the certificates (XA, ZD) to the device:

Feature		Variant	ZD021F	ZD110F	ZD109F	ZD107F	ZD106F	ZD078F	ZD077F	ZD076F	ZD075F	ZD117F	ZD116F	ZD114F	ZD113F	ZD083F	ZD082F	ZD081F	ZD080F	XA379F	XA378F	XA416F	XA415F	XA414F	XA413F	XA412F	XA411F	XA410F
10 Approval:	Non-hazardous area	A																										
	*NEPSI Ex ia IIC T6	I																		X	X							
	*TIIS Ex ia IIC T4	K																										
	FM DIP Cl.II Div.1 Gr. E-G, N.I.	M						X																				
	CSA General Purpose	N																										
	CSA DIP Cl.II Div.1 Gr. G + coal dust	P														X												
	FM IS Cl.I,II,III Div.1 Gr. A-G, N.I., zone 0, 1, 2	S	X	X	X	X	X			X	X																	
	FM XP Cl.I,II,III Div.1 Gr. A-G, zone 1, 2	T							X																				
	CSA IS Cl.I,II,III Div.1 Gr. A-D, G + coal dust, N.I., zone 0, 1, 2	U										X	X	X	X			X	X									
	CSA XP Cl.I,II,III Div.1 Gr. A-D, G + coal dust, N.I., zone 1, 2	V															X											
	ATEX II 1/2G Ex ia IIC T6	1																									X	X
	ATEX II 1/2D, Alu blind cover [1]	2																				X	X	X				
	ATEX II 2G Ex e mb (ia) IIC T6	3																							X			
	ATEX II 1/3D [1]	4																				X	X	X				
	ATEX II 1/2G Ex ia IIC T6,ATEX II 1/3D	5																					X					
	ATEX II 1/2G Ex d (ia) IIC T6	7																								X		
50 Power supply Output:	2-wire 4-20mA SIL HART	B			X		X		X		X		X		X		X		X		X	X	X		X	X		X
	2-wire PROFIBUS PA	D	X	X		X			X	X		X		X			X	X		X		X	X		X	X	X	
	2-wire FOUNDATION Fieldbus	F	X	X		X			X	X		X		X			X	X		X		X	X		X	X	X	
	4-wire 90-250VAC 4-20mA SIL HART	G						X								X									X			
	4-wire 10.5-32VDC 4-20mA SIL HART	H						X								X									X			
80 Housing:	F12 Alu, coated IP68 NEMA6P	A	X					X		X	X					X		X	X				X	X			X	X
	F23 316L IP68 NEMA6P	B	X			X	X							X	X								X				X	X
	T12 Alu, coated IP68 NEMA6P	C							X								X					X			X	X		
	T12 Alu, coated IP68 NEMA6P + OVP	D	X	X	X							X	X										X				X	X

1) Housing F12/F23/T12-OVP: In combination with electronics B, D or F supply intrinsically safe.
** in preparation*

Suitability for hygenic processes

Overview of permitted process connections, → 📄 27.





Note!
The gap-free connections can be cleaned without residue using the usual cleaning methods.

Many versions of the Levelflex M meet the requirements of 3A-Sanitary Standard No. 74. Endress+Hauser confirms this by attaching the 3A symbol.

Pharma (CoC)

Certificate of Compliance (CoC)

- See "Ordering information", → 📄 42, feature 100 "Additional Option:", option"P".
- Materials in Contact with process made of 316L with Δ ferrite < 3%
- Surface roughness Ra < 0,38 µm/15 µin
- Information on ASME BPE Conformity

Overfill prevention

SIL 2, for 4 to 20 mA output signal (see SD00174F/00/EN "Functional Safety Manual").

Telecommunications

Complies with "Part 15" of the FCC rules for an "Unintentional Radiator". All probes meet the requirements for a "Class A Digital Device".
In addition, all probes in metallic tanks meet the requirements for a "Class B Digital Device".

External standards and guidelines

The European directives and standards applied can be taken from the associated EC Declarations of Conformity. In addition, the following also applied for Levelflex M:

EN 60529
Protection class of housing (IP-code)

NAMUR – international user association of automation technology in process industries.
- NE21
  Electromagnetic compatibility (EMC) of industrial process and laboratory control equipment.
- NE43
  Standardization of the signal level for the failure information of digital transmitters.

Ordering information

Levelflex M FMP43 **Device selection**

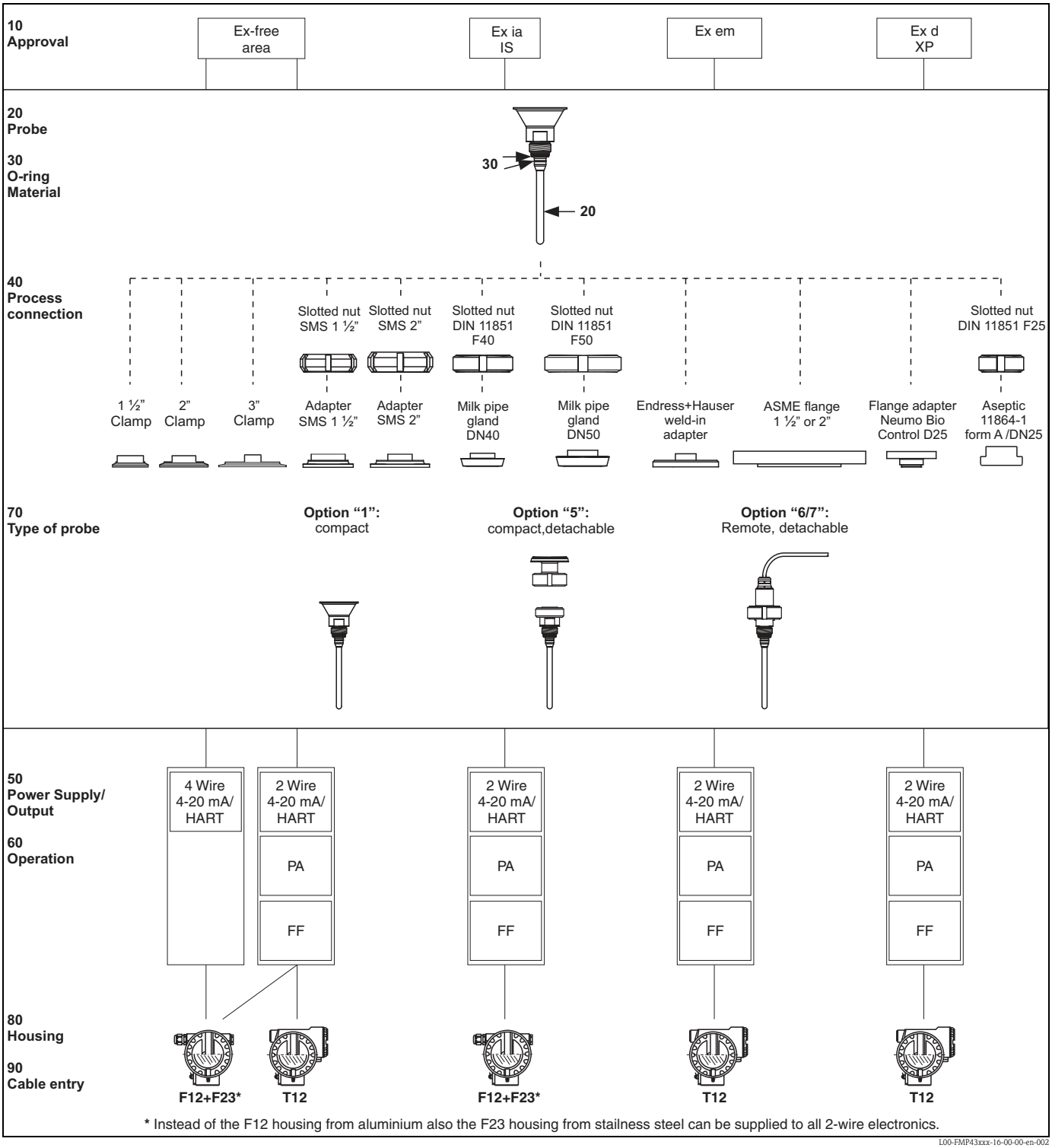

Note!
For orders with a display, the housing cover is delivered with an inspection glass. For orders without a display, a dummy cover is delivered.

Exception: For orders with the ATEX II 1/2 D dust ignition-proof certificate, a dummy cover is always delivered, even for orders with a built-in display.

Ordering information Levelflex M FMP43

10	**Approval:**								
	A	Non-hazardous area							
	1	ATEX II 1/2 G Ex ia IIC T6							
	7	ATEX II 1/2 G Ex d (ia) IIC T6							
	5	ATEX II 1/2 G Ex ia IIC T6, ATEX II 1/3 D							
	3	ATEX II 2G Ex e mb (ia) IIC T6							
	2	ATEX II 1/2 D, Alu blind cover							
	4	ATEX II 1/3 D							
	M	FM DIP Cl. II Div. 1 Gr. E-G N.I.							
	S	FM IS Cl. I, II, III Div. 1 Gr. A-G N.I., zone 0, 1, 2							
	T	FM XP Cl. I, II, III Div. 1 Gr. A-G, zone 1, 2							
	N	CSA General Purpose							
	P	CSA DIP Cl. II Div. 1 Gr. G + coal dust, N. I.							
	U	CSA IS Cl. I, II, III Div. 1 Gr. A-D, G + coal dust, N.I., zone 0, 1, 2							
	V	CSA XP Cl .I, II, III Div. 1 Gr. A-D, G + coal dust, N.I., zone 1, 2							
	K	TIIS Ex ia IIC T4 (in preparation)							
	I	NEPSI Ex ia IIC T6 (in preparation)							
	Y	Special version, TSP-No. to be spec.							
20		**Probe:**							
		300 mm - 4000 mm/12 in - 157 in							
	K	..... mm, rod 8 mm, 316L, Ra < 0.76 µm/30 µin							
	M	..... in, rod 8 mm 316L, Ra < 0.76 µm/30 µin							
	S	..... mm, rod 8 mm, 316L, electropolished Ra < 0.38 µm/15 µin							
	T	..... in, rod 8 mm 316L, electropolished Ra < 0.38 µm/15 µin							
	Y	Special version, TSP-No. to be spec.							
30				**O-ring Material; Temperature:**					
				5	EPDM, FDA, USP Cl. VI; - 20 °C to 130 °C				
				6	Kalrez, FDA, USP Cl. VI; - 20 °C to 150 °C				
				9	Special version, TSP-No. to be spec.				
40					**Process Connection:**				
					— Threaded boss —				
				U1J	Thread M24, 316L, install > accessory weld-in adapter				
					— Clamp connections —				
				TCJ	Tri-clamp ISO2852 DN25-38 (1 to 1-1/2"), 316L, 3A, EHEDG				
				TDJ	Tri-clamp ISO2852 DN40-51 (2"), 316L, 3A, EHEDG				
				TFJ	Tri-clamp ISO2852 DN70-76.1 (3"), 316L, 3A, EHEDG				
					— Hygienic connections —				
				T7J	SMS 1-1/2" PN25, 316L, EHEDG				
				TXJ	SMS 2" PN25, 316L, EHEDG				
				MAJ	DIN11864-1 A DN25 tube DIN11850, 316L, slotted-nut, EHEDG				
				MQJ	DIN11851 DN40 PN40, slotted-nut, 316L, EHEDG				
				MRJ	DIN11851 DN50 PN40, slotted-nut, 316L, EHEDG				
				S1J	NEUMO BioControl DN25 PN16, 316L, EHEDG				
					— ANSI flanges —				
				AEJ	1-1/2" 150 lbs RF, 316L flange ANSI B16.5				
				AFJ	2" 150 lbs RF, 316L flange ANSI B16.5				
				YY9	Special version, TSP-No. to be spec.				
50						**Power Supply; Output:**			
						B	2-wire ; 4-20mA SIL HART		
						D	2-wire; PROFIBUS PA		
						F	2-wire; FOUNDATION Fieldbus		
						G	4-wire 90-250 VAC; 4-20mA SIL HART		
						H	4-wire 10.5-32 VDC; 4-20mA SIL HART		
						Y	Special version, TSP-No. to be spec.		
60							**Operation:**		
							1	W/o display, via communication	
							2	4-line display VU331	
							3	Prepared for FHX40	
							9	Special version, TSP-No. to be spec.	
70								**Type of Probe:**	
								1	Compact, basic version
								5	Compact, detachable
								6	Remote, cable 3 m, detachable
								7	Remote, cable 6 m, detachable
								9	Special version, TSP-No. to be spec.

80	**Housing:**	
	A	F12 Alu, coated IP68 NEMA6P
	B	F23, 316L, IP68, NEMA6P
	C	T12 Alu, coated IP68 NEMA6P, separate conn. compartment
	D	T12 Alu, coated IP68 NEMA6P + OVP[1], seperate terminal compartment
	Y	Special version, TSP-No. to be spec.
90	**Cable Entry:**	
	2	Gland M20 (EEx d > thread M20)
	3	Thread G 1/2
	4	Thread NPT 1/2
	5	Plug M12
	6	Plug 7/8"
	9	Special version, TSP-No. to be spec.
100	**Additional Option:**	
	A	Basic version
	B	EN10204-3.1 material (316L wetted parts) inspection certificate
	H	5-point linearity protocol, see additional spec.
	J	5-point, 3.1, 5-point linearity protocol, see additional spec., EN10204-3.1 material (316L wetted parts), inspection certificate
	P	CoC-ASME BPE, EN10204-3.1 material (316L wetted parts) inspection certificate
	R	5-point, CoC-ASME BPE, 3.1, 5-point linearity protocol, see additional spec., EN10204-3.1 material (316L wetted parts), inspection certificate
	Y	Special version, TSP-No. to be spec.
995	**Marking:**	
	1	Tagging (TAG), see additional spec.
	2	Bus address, see additional spec.
FMP43-		Complete product designation

[1] OVP = overvoltage protection

Accessories

Weather protection cover

A weather protection cover made of stainless steel is recommended for outdoor mounting (order code: 543199-0001). The shipment includes the protective cover and tension clamp.

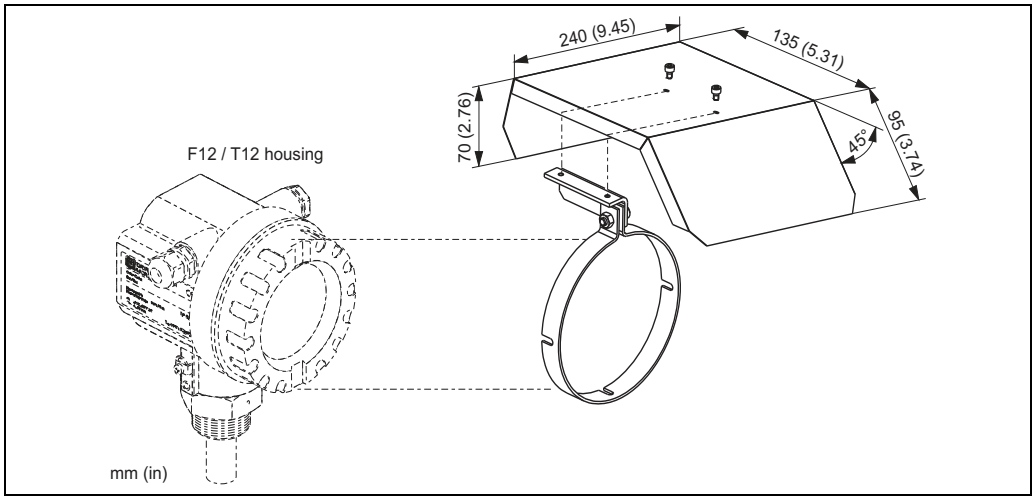

L00-FMR2xxxx-00-00-06-en-001

Weld-in adapter

Welding adapter with M24xof 1.5 - threads for the front-concise assembly of the sensor.
Material: corrosion-resistant steel 316L (1.4435)
Weight: 0.22 kg
For details refer to BA00361F/00/A6.

- Standard:
  Order No.: 71041381
- With 3.1 inspection certificate:
  Order No.: 71041383

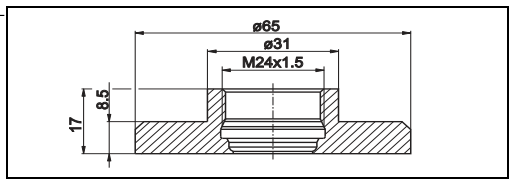

L00-FMP43xxxx-06-00-00-xx-016

Remote display FHX40

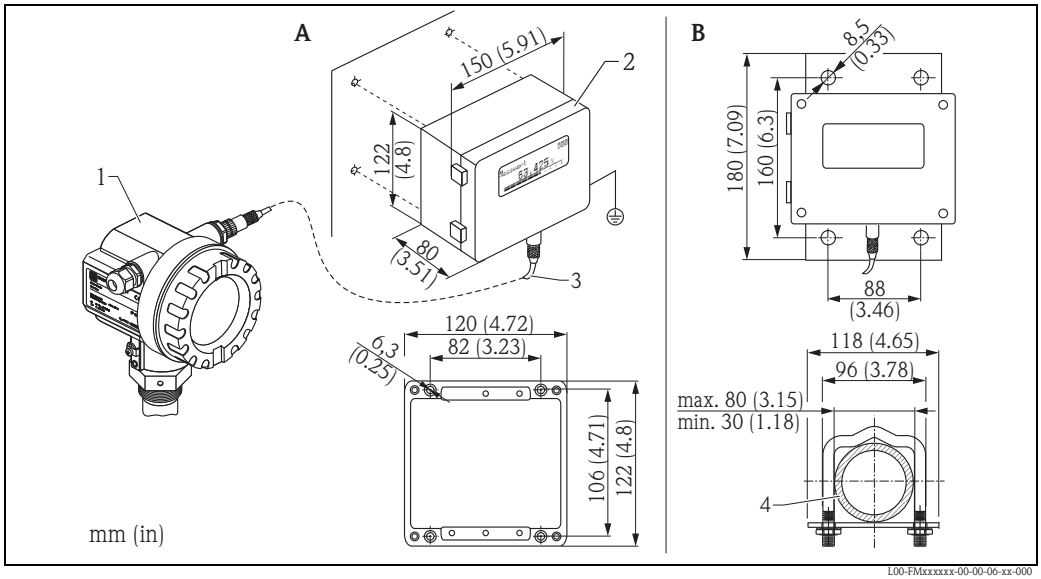

1 Micropilot M, Levelflex M, Prosonic M
2 Separate housing FHX40 (IP65)
3 Cabel
4 Pipe

A Wall mounting (without mounting bracket)
B Pipe mounting (mounting bracket and plate supplied optionally, see product structure)

Note!
For the device families Micropilot FMR2xx, Levelflex FMP4x and Prosonic FMU4x, the remote display FHX40 must be only used for the HART communication version.

Ordering information:

010						**Approval**
	A					Non-hazardous area
	2					ATEX II 2G Ex ia IIC T6
	3					ATEX II 2D Ex ia IIIC T80°C
	G					IECEx zone1 Ex ia IIC T6/T5
	S					FM IS Cl.I Div.1 Gr.A-D, zone 0
	U					CSA IS Cl.I Div.1 Gr.A-D, zone 0
	N					CSA General Purpose
	K					TIIS Ex ia IIC T6
	C					NEPSI Ex ia IIC T6/T5
	Y					Special version, TSP-no. to be spec.
020						**Cable**
		1				20m/65ft; for HART
		5				20 m/65 ft (> PROFIBUS PA / FOUNDATION Fieldbus)
		9				Special version, TSP-no. to be spec.
030						**Additional option**
			A			Basic version
			B			Mounting bracket, pipe 1"/ 2"
			Y			Special version, TSP-no. to be spec.
995						**Marking**
				1		Messstelle (TAG), see additional spec.
FHX40 -						Complete product designation

For connection of the remote display FHX40 use the cable which fits the communication version of the respective instrument.

Technical data (cable and housing)

Max. cable length	20 m (66 ft) (fixed length including the cast-on plugs)
Temperature range	–40 to +60 °C (–40 to +140 °F)
Degree of protection	IP65/67 (housing); IP68 (cable) acc. to IEC 60529
Materials	Housing: AlSi12; cable glands: nickle plated brass
Dimensions [mm (in)	122x150x80 (4.8x5.91x3.15) / HxWxD

Materials

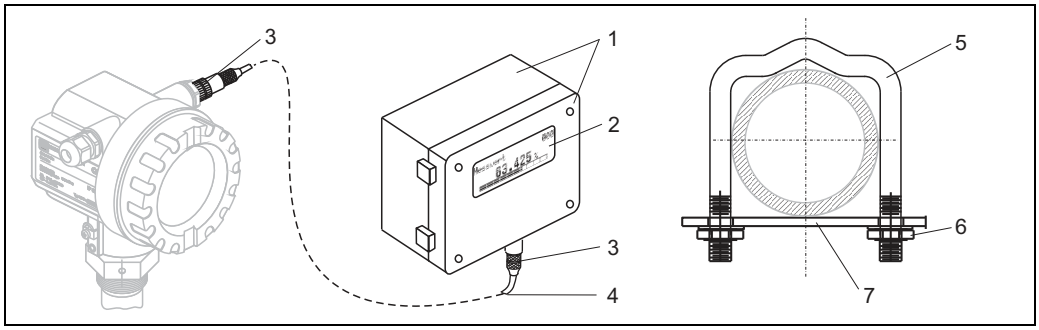

L00-FMxxxxxx-00-00-06-de-003

Position	Part	Material
1	Housing/Cover	AlSi12, Screw: V2A
	Ground terminal	CuZn nickel-plated, Screw: V2A
2	Display	Glass
3	Cable gland	CuZn nickel-plated
4	Cable	PVC
5	Mounting bracket	316 Ti (1.4571) or 316 L (1.4435) or 316 (1.4401)
6	Nut	V4A
7	Plate) Screw set (M5	316 Ti (1.4571) Spring washer: 301 (1.4310) or V2A Screw: V4A, Nut: V4A

Commubox FXA195 HART

For intrinsically safe communication with FieldCare via the USB interface.
For details refer to TI00404F/00/EN.

Commubox FXA291

The Commubox FXA291 connects Endress+Hauser field devices with CDI interface (= Endress+Hauser Common Data Interface) to the USB interface of a personal computer or a notebook.
For details refer to TI00405C/07/EN.

Note!
For the device you need the "ToF Adapter FXA291" as an additional accessory.

ToF Adapter FXA291

The ToF Adapter FXA291 connects the Commubox FXA291 via the USB interface of a personal computer or a notebook to the device. For details refer to KA00271F/00/A2.

Protective cover

With the protective cover the probe can be locked with dismantled electronics.
For details refer to BA00362F/00/A6.
Order No.: 71041379

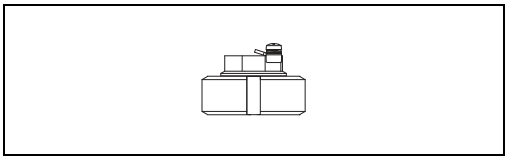

L00-FMP43xxx-06-00-00-xx-016

Calibration kit

The calibration kit is used to regularly test the accuracy and reproducibility of the Levelflex M FMP43 level measurement device. For details refer to BA00360F/00/EN.
Order No.: 71041382

Additional documentation

This Additional documentation can be found on our product pages on "www.endress.com".

Fields of activities

Level measurement

Level limit detection and continuous level measurement in liquids and bulk solids, FA00001F/00/EN.

Competence brochure

Continuous Level Measurement in Liquids

Selection and engineering for the process industrie, CP00023F/00/EN.

Technical Information

Fieldgate FXA520

Technical Information for Fieldgate FXA520, TI00369F/00/EN.

Operating Instructions

Levelflex M

Correlation of operating instructions to the device:

Device type	Output [1]	Communication	Operating Instructions	Description of Instrument functions	Brief Operating Instructions (in device)
FMP43	B, G, H	HART	BA00357F/00/EN	BA00245F/00/EN	KA00189F/00/A2
	D	PROFIBUS PA	BA00358F/00/EN	BA00245F/00/EN	KA00189F/00/A2
	F	FOUNDATION Fieldbus	BA00359F/00/EN	BA00245F/00/EN	KA00189F/00/A2

1) Assignment, see ordering information: 50 electronic insert/communication.

Engineering hints PROFIBUS PA

Guidelines for planning and commissioning, BA034S/04/EN.

Instruments International

Endress+Hauser
Instruments International AG
Kaegenstrasse 2
4153 Reinach
Switzerland

Tel.+41 61 715 81 00
Fax+41 61 715 25 00
www.endress.com
info@ii.endress.com

Endress+Hauser

People for Process Automation

TI00424F/00/EN/15.12
71198463
FM+SGML 9

71198463