BA01122F/00/EN/04.18
71396501
2018-04-12

01.01.zz (Device firmware)

Operating Instructions
Micropilot FMR53, FMR54 FOUNDATION Fieldbus

Free space radar

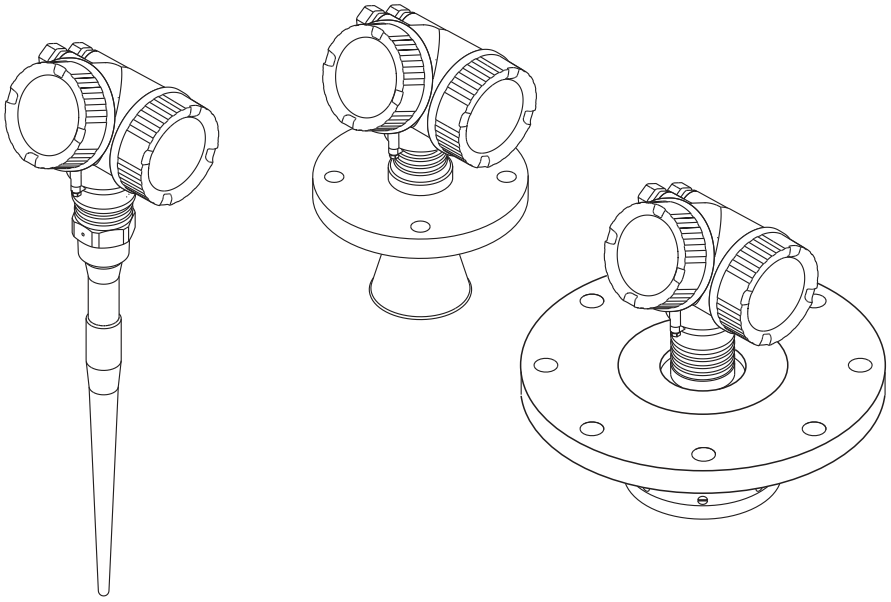

Endress+Hauser
People for Process Automation

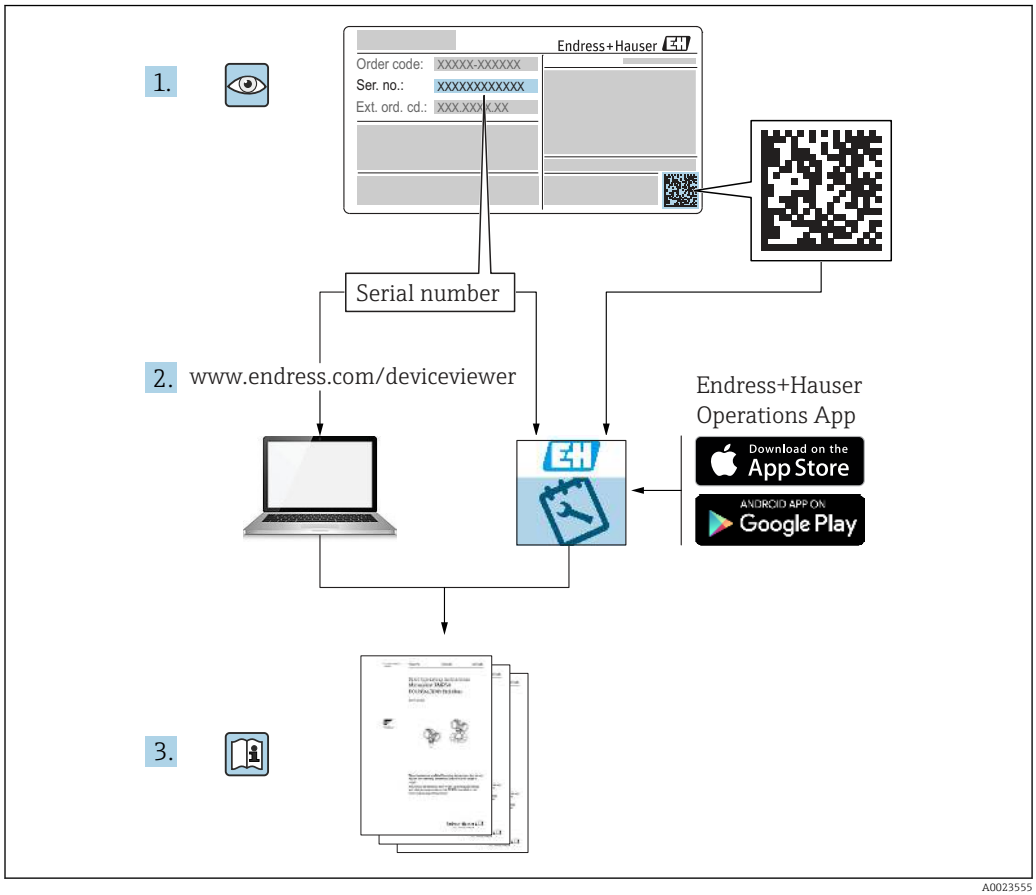
1.
Endress+Hauser
Order code: XXXXX-XXXXXX
Ser. no.: XXXXXXXXXXX
Ext. ord. cd.: XXX XXX XX
Serial number
2. www.endress.com/deviceviewer
Endress+Hauser
Operations App
Download on the App Store
ANDROID APP ON Google Play
3.
A0023555

Table of contents

1 Wichtige Hinweise zum Dokument 6
1.1 Document function 6
1.2 Symbols 6
1.2.1 Safety symbols 6
1.2.2 Electrical symbols 6
1.2.3 Tool symbols 6
1.2.4 Symbols for certain types of information 7
1.2.5 Symbols in graphics 7
1.2.6 Symbols at the device 8
1.3 Additional documentation 8
1.4 Terms and abbreviations 9
1.5 Registered trademarks 10

2 Basic safety instructions 11
2.1 Requirements for the personnel 11
2.2 Designated use 11
2.3 Workplace safety 12
2.4 Operational safety 12
2.5 Product safety 12
2.5.1 CE mark 12
2.5.2 EAC conformity 12
2.6 Safety Instructions (XA) 13

3 Product description 16
3.1 Product design 16
3.1.1 Micropilot FMR53 16
3.1.2 Micropilot FMR54 16
3.1.3 Electronics housing 17

4 Incoming acceptance and product identification 18
4.1 Incoming acceptance 18
4.2 Product identification 18
4.2.1 Nameplate 19

5 Storage, Transport 20
5.1 Storage conditions 20
5.2 Transport product to the measuring point 20

6 Installation 21
6.1 Installation conditions 21
6.1.1 Mounting position 21
6.1.2 Vessel installations 22
6.1.3 Reduction of interference echoes 22
6.1.4 Measurement in a plastic vessel 23
6.1.5 Optimization options 23
6.1.6 Beam angle 24
6.2 Measuring conditions 25
6.3 Mounting cladded flanges 26
6.4 Installation in vessel (free space) 26
6.4.1 Rod antenna (FMR53) 26
6.4.2 Horn antenna (FMR54) 28
6.4.3 Planar antenna (FMR54) 29
6.5 Installation in stilling well 30
6.5.1 Recommendations for the stilling well 30
6.5.2 Examples for the construction of stilling wells 31
6.6 Installation in bypass 32
6.6.1 Recommendations for the bypass pipe 32
6.6.2 Example for the construction of a bypass 33
6.7 Container with heat insulation 34
6.8 Turning the transmitter housing 34
6.9 Turning the display 35
6.9.1 Opening cover 35
6.9.2 Turning the display module 35
6.9.3 Closing electronics compartment cover 36
6.10 Post-installation check 36

7 Electrical connection 37
7.1 Connection conditions 37
7.1.1 Terminal assignment 37
7.1.2 Cable specification 39
7.1.3 Device plug connectors 40
7.1.4 Supply voltage 41
7.1.5 Overvoltage protection 41
7.2 Connecting the measuring device 42
7.2.1 Opening connection compartment cover 42
7.2.2 Connecting 43
7.2.3 Plug-in spring-force terminals 43
7.2.4 Closing connection compartment cover 44
7.3 Post-connection check 44

8 Operation options 46
8.1 Overview 46
8.1.1 Local operation 46
8.1.2 Operation with remote display and operating module FHX50 47
8.1.3 Remote operation 47
8.2 Structure and function of the operating menu 49
8.2.1 Structure of the operating menu 49
8.2.2 User roles and related access authorization 51
8.2.3 Data access - Security 51
8.3 Display and operating module 56
8.3.1 Display appearance 56
8.3.2 Operating elements 59

8.3.3 Entering numbers and text 60
8.3.4 Opening the context menu 62
8.3.5 Envelope curve on the display and operating module 63

9 Integration into a FOUNDATION Fieldbus network 64
9.1 Device Description (DD) 64
9.2 Integration into the FOUNDATION Fieldbus network 64
9.3 Device identification and addressing 64
9.4 Block model 66
9.4.1 Blocks of the device software 66
9.4.2 Block configuration when device is delivered 67
9.5 Assignment of the measured values (CHANNEL) in an AI Block 67
9.6 Index tables of Endress+Hauser parameters . . 67
9.6.1 Setup Transducer Block 68
9.6.2 Advanced Setup Transducer Block . . . 68
9.6.3 Display Transducer Block 69
9.6.4 Diagnostic Transducer Block 70
9.6.5 Expert Configuration Transducer Block 71
9.6.6 Expert Information Transducer Block 73
9.6.7 Service Sensor Transducer Block 73
9.6.8 Service Information Transducer Block 74
9.6.9 Advanced Diagnostics Transducer Block 74
9.7 Methods 75

10 Commissioning via wizard 76

11 Commissioning via operating menu 77
11.1 Installation and function check 77
11.2 Setting the operating language 77
11.3 Configuration of a level measurement 78
11.4 Recording the reference curve 80
11.5 Configuration of the on-site display 81
11.5.1 Factory settings of the on-site display 81
11.5.2 Adjustment of the on-site display . . . 81
11.6 Configuration management 82
11.7 Protection of the settings against unauthorized changes 83

12 Commissioning (block-based operation) 84
12.1 Function check 84
12.2 Block configuration 84
12.2.1 Preparatory steps 84
12.2.2 Configuring the Resource Block 84
12.2.3 Configuring the Transducer Blocks . . . 84
12.2.4 Configuring the Analog Input Blocks 85
12.2.5 Additional configuration 85
12.3 Scaling of the measured value in an AI Block . . 85
12.4 Language selection 86
12.5 Configuration of a level measurement 87
12.6 Configuration of the on-site display 88
12.6.1 Factory settings of the on-site display for level measurements 88
12.7 Configuration management 88
12.8 Configuration of the event behavior according to the FOUNDATION Fieldbus specification FF912 90
12.8.1 Groups of events 91
12.8.2 Allocation parameters 93
12.8.3 Configurable area 96
12.8.4 Transmission of the event meassages to the bus 97
12.9 Protection of the settings against unauthorized changes 97

13 Diagnostics and troubleshooting . . . 98
13.1 General trouble shooting 98
13.1.1 General errors 98
13.1.2 Parametrization errors 98
13.2 Diagnostic information on local display 100
13.2.1 Diagnostic message 100
13.2.2 Calling up remedial measures 102
13.3 Diagnostic event in the operating tool 103
13.4 Diagnostic messages in the DIAGNOSTIC Transducer Block (TRDDIAG) 104
13.5 Diagnostic list 104
13.6 Overview of diagnostic events 105
13.7 Event logbook 106
13.7.1 Event history 106
13.7.2 Filtering the event logbook 107
13.7.3 Overview of information events 107
13.8 Firmware history 108

14 Maintenance 109
14.1 Exterior cleaning 109
14.2 Replacing seals 109

15 Repairs 110
15.1 General information on repairs 110
15.1.1 Repair concept 110
15.1.2 Repairs to Ex-approved devices 110
15.1.3 Replacement of an electronics module 110
15.1.4 Replacement of a device 110
15.2 Spare parts 111
15.3 Return 111
15.4 Disposal 111

16 Accessories 112
16.1 Device-specific accessories 112
16.1.1 Weather protection cover 112
16.1.2 Antenna extension FAR10 (for FMR54) 113
16.1.3 Remote display FHX50 114
16.1.4 Overvoltage protection 115
16.1.5 Gas-tight feedthrough 115
16.1.6 Bluetooth module for HART devices 116
16.2 Communication-specific accessories 117
16.3 Service-specific accessories 117
16.4 System components 117

17 Operating menu 118
17.1 Overview of the operating menu (display module) 118
17.2 Overview of the operating menu (operating tool) 124
17.3 "Setup" menu 130
17.3.1 "Mapping" wizard 137
17.3.2 "Analog input 1 to 5" submenu 138
17.3.3 "Advanced setup" submenu 140
17.4 "Diagnostics" menu 179
17.4.1 "Diagnostic list" submenu 181
17.4.2 "Event logbook" submenu 182
17.4.3 "Device information" submenu 183
17.4.4 "Measured values" submenu 185
17.4.5 "Analog input 1 to 5" submenu 186
17.4.6 "Data logging" submenu 188
17.4.7 "Simulation" submenu 191
17.4.8 "Device check" submenu 197
17.4.9 "Heartbeat" submenu 199

Index 200

1 Wichtige Hinweise zum Dokument

1.1 Document function

These Operating Instructions contain all the information that is required in various phases of the life cycle of the device: from product identification, incoming acceptance and storage, to mounting, connection, operation and commissioning through to troubleshooting, maintenance and disposal.

1.2 Symbols

1.2.1 Safety symbols

Symbol	Meaning
DANGER	**DANGER!** This symbol alerts you to a dangerous situation. Failure to avoid this situation will result in serious or fatal injury.
WARNING	**WARNING!** This symbol alerts you to a dangerous situation. Failure to avoid this situation can result in serious or fatal injury.
CAUTION	**CAUTION!** This symbol alerts you to a dangerous situation. Failure to avoid this situation can result in minor or medium injury.
NOTICE	**NOTE!** This symbol contains information on procedures and other facts which do not result in personal injury.

1.2.2 Electrical symbols

Symbol	Meaning
⎓	Direct current
~	Alternating current
⎓ ~	Direct current and alternating current
⏚	**Ground connection** A grounded terminal which, as far as the operator is concerned, is grounded via a grounding system.
⏚	**Protective Earth (PE)** A terminal which must be connected to ground prior to establishing any other connections. The ground terminals are situated inside and outside the device: ▪ Inner ground terminal: Connects the protectiv earth to the mains supply. ▪ Outer ground terminal: Connects the device to the plant grounding system.

1.2.3 Tool symbols

Symbol	Meaning
 A0013442	Torx screwdriver
 A0011220	Flat blade screwdriver

Symbol	Meaning
 A0011219	Cross-head screwdriver
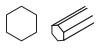 A0011221	Allen key
 A0011222	Hexagon wrench

1.2.4 Symbols for certain types of information

Symbol	Meaning
	**Permitted** Procedures, processes or actions that are permitted.
	**Preferred** Procedures, processes or actions that are preferred.
	**Forbidden** Procedures, processes or actions that are forbidden.
	**Tip** Indicates additional information.
	Reference to documentation.
	Reference to page.
	Reference to graphic.
	Notice or individual step to be observed.
1., 2., 3...	Series of steps.
	Result of a step.
	Help in the event of a problem.
	Visual inspection.

1.2.5 Symbols in graphics

Symbol	Meaning
1, 2, 3 ...	Item numbers
1., 2., 3...	Series of steps
A, B, C, ...	Views
A-A, B-B, C-C, ...	Sections
	**Hazardous area** Indicates a hazardous area.
	**Safe area (non-hazardous area)** Indicates the non-hazardous area.

1.2.6 Symbols at the device

Symbol	Meaning
	**Safety instructions** Observe the safety instructions contained in the associated Operating Instructions.
	**Temperature resistance of the connection cables** Specifies the minimum value of the temperature resistance of the connection cables.

1.3 Additional documentation

Document	Purpose and content of the document
Technical Information TI01041F (FMR53, FMR54)	**Planning aid for your device** The document contains all the technical data on the device and provides an overview of the accessories and other products that can be ordered for the device.
Brief Operating Instructions KA01126F (FMR53/FMR54, FOUNDATION Fieldbus)	**Guide that takes you quickly to the 1st measured value** The Brief Operating Instructions contain all the essential information from incoming acceptance to initial commissioning.
Description of Device Parameters GP01017F (FMR5x, FOUNDATION Fieldbus)	**Reference for your parameters** The document provides a detailed explanation of each individual parameter in the operating menu. The description is aimed at those who work with the device over the entire life cycle and perform specific configurations.
Special documentation SD01087F	**Functional Safety Manual** The document is part of the Operating Instructions and serves as a reference for application-specific parameters and notes.
Special documentation SD01870F	**Manual for Heartbeat Verification and Heartbeat Monitoring** The document contains descriptions of the additonal parameters and technical data which are available with the **Heartbeat Verification** and **Heartbeat Monitoring** application packages.

For an overview of the scope of the associated Technical Documentation, refer to the following:

- The *W@M Device Viewer* : Enter the serial number from the nameplate (www.endress.com/deviceviewer)
- The *Endress+Hauser Operations App*: Enter the serial number from the nameplate or scan the 2-D matrix code (QR code) on the nameplate.

1.4 Terms and abbreviations

Term/abbreviation	Explanation
BA	Document type "Operating Instructions"
KA	Document type "Brief Operating Instructions"
TI	Document type "Technical Information"
SD	Document type "Special Documentation"
XA	Document type "Safety Instructions"
PN	Nominal pressure
MWP	Maximum Working Pressure The MWP can also be found on the nameplate.
ToF	Time of Flight
FieldCare	Scalable software tool for device configuration and integrated plant asset management solutions
DeviceCare	Universal configuration software for Endress+Hauser HART, PROFIBUS, FOUNDATION Fieldbus and Ethernet field devices
DTM	Device Type Manager
DD	Device Description for HART communication protocol
ε_r (DC value)	Relative dielectric constant
Operating tool	The term "operating tool" is used in place of the following operating software: ▪ FieldCare / DeviceCare, for operation via HART communication and PC ▪ SmartBlue (app), for operation using an Android or iOS smartphone or tablet.
BD	Blocking Distance; no signals are analyzed within the BD.
PLC	Programmable Logic Controller
CDI	Common Data Interface
PFS	Pulse Frequence Status (Switching output)
MBP	Manchester Bus Powered
PDU	Protocol Data Unit

1.5 Registered trademarks

FOUNDATION™ Fieldbus
Registered trademark of the FieldComm Group, Austin, Texas, USA

Bluetooth®
The Bluetooth® word mark and logos are registered trademarks owned by the Bluetooth SIG, Inc. and any use of such marks by Endress+Hauser is under license. Other trademarks and trade names are those of their respective owners.

Apple®
Apple, the Apple logo, iPhone, and iPod touch are trademarks of Apple Inc., registered in the U.S.and other countries. App Store is a service mark of Apple Inc.

Android®
Android, Google Play and the Google Play logo are trademarks of Google Inc.

KALREZ®, VITON®
Registered trademark of DuPont Performance Elastomers L.L.C., Wilmington, USA

TEFLON®
Registered trademark of E.I. DuPont de Nemours & Co., Wilmington, USA

TRI CLAMP®
Registered trademark of Alfa Laval Inc., Kenosha, USA

2 Basic safety instructions

2.1 Requirements for the personnel

The personnel for installation, commissioning, diagnostics and maintenance must fulfill the following requirements:
- Trained, qualified specialists must have a relevant qualification for this specific function and task.
- Are authorized by the plant owner/operator.
- Are familiar with federal/national regulations.
- Before starting work, read and understand the instructions in the manual and supplementary documentation as well as the certificates (depending on the application).
- Follow instructions and comply with basic conditions.

The operating personnel must fulfill the following requirements:
- Are instructed and authorized according to the requirements of the task by the facility's owner-operator.
- Follow the instructions in this manual.

2.2 Designated use

Application and measured materials
The measuring device described in these Operating Instructions is intended for the continuous, contactless level measurement of liquids, pastes and sludge. Because of its operating frequency of about 6 GHz, a maximum radiated pulsed power of 12.03 mW and an average power output of 0.024 mW, the operation is completely harmless to humans and animals.

Observing the limit values specified in the "Technical data" and listed in the Operating Instructions and supplementary documentation, the measuring device may be used for the following measurements only:
- Measured process variables: level, distance, signal strength
- Calculated process variables: Volume or mass in arbitrarily shaped vessels; flow through measuring weirs or flumes (calculated from the level by the linearization functionality)

To ensure that the measuring device remains in proper condition for the operation time:
- Use the measuring device only for measured materials against which the process-wetted materials are adequately resistant.
- Observe the limit values in "Technical data".

Incorrect use
The manufacturer is not liable for damage caused by improper or non-designated use.

Verification for borderline cases:
- For special measured materials and cleaning agents, Endress+Hauser is glad to provide assistance in verifying the corrosion resistance of wetted materials, but does not accept any warranty or liability.

Residual risk
The electronics housing and its built-in components such as display module, main electronics module and I/O electronics module may heat to 80 °C (176 °F) during operation through heat transfer from the process as well as power dissipation within the electronics. During operation the sensor may assume a temperature near the temperature of the measured material.

Danger of burns due to heated surfaces!
- For high process temperatures: Install protection against contact in order to prevent burns.

2.3 Workplace safety

For work on and with the device:
- ▶ Wear the required personal protective equipment according to federal/national regulations.

2.4 Operational safety

Risk of injury.
- ▶ Operate the device in proper technical condition and fail-safe condition only.
- ▶ The operator is responsible for interference-free operation of the device.

Conversions to the device

Unauthorized modifications to the device are not permitted and can lead to unforeseeable dangers.
- ▶ If, despite this, modifications are required, consult with the manufacturer.

Repair

To ensure continued operational safety and reliability,
- ▶ Carry out repairs on the device only if they are expressly permitted.
- ▶ Observe federal/national regulations pertaining to repair of an electrical device.
- ▶ Use original spare parts and accessories from the manufacturer only.

Hazardous area

To eliminate a danger for persons or for the facility when the device is used in the hazardous area (e.g. explosion protection, pressure vessel safety):
- ▶ Based on the nameplate, check whether the ordered device is permitted for the intended use in the hazardous area.
- ▶ Observe the specifications in the separate supplementary documentation that is an integral part of these Instructions.

2.5 Product safety

This measuring device is designed in accordance with good engineering practice to meet state-of-the-art safety requirements, has been tested, and left the factory in a condition in which it is safe to operate. It meets general safety standards and legal requirements.

NOTICE

Loss of degree of protection by opening of the device in humid environments
- ▶ If the device is opened in a humid environment, the degree of protection indicated on the nameplate is no longer valid. This may also impair the safe operation of the device.

2.5.1 CE mark

The measuring system meets the legal requirements of the applicable EC guidelines. These are listed in the corresponding EC Declaration of Conformity together with the standards applied.

Endress+Hauser confirms successful testing of the device by affixing to it the CE mark.

2.5.2 EAC conformity

The measuring system meets the legal requirements of the applicable EAC guidelines. These are listed in the corresponding EAC Declaration of Conformity together with the standards applied.

Endress+Hauser confirms successful testing of the device by affixing to it the EAC mark.

2.6 Safety Instructions (XA)

Depending on the approval, the following Safety Instructions (XA) are supplied with the device. They are an integral part of the Operating Instructions.

Feature 010	Approval	Available for	Feature 020 "Power Supply; Output"				
			A [1]	B [2]	C [3]	E [4]/G [5]	K [6]/L [7]
BA	ATEX: II 1 G Ex ia IIC T6-T1 Ga	▪ FMR53 ▪ FMR54	XA00677F	XA00677F	XA00677F	XA00685F	-
BB	ATEX: II 1/2 G Ex ia IIC T6-T1 Ga/Gb	▪ FMR53 ▪ FMR54	XA00677F	XA00677F	XA00677F	XA00685F	-
BC	ATEX: II 1/2 G Ex d [ia] IIC T6-T1 Ga/Gb	▪ FMR53 ▪ FMR54	XA00680F	XA00680F	XA00680F	XA00688F	XA00680F
BD	ATEX: II 1/2/3 G Ex ic [ia Ga] IIC T6-T1 Ga/Gb/Gc	▪ FMR53 ▪ FMR54	XA00678F	XA00678F	XA00678F	XA00686F	XA00678F
BG	ATEX: II 3 G Ex nA IIC T6-T1 Gc	▪ FMR53 ▪ FMR54	XA00679F	XA00679F	XA00679F	XA00687F	XA00679F
BH	ATEX: II 3 G Ex ic IIC T6-T1 Gc	▪ FMR53 ▪ FMR54	XA00679F	XA00679F	XA00679F	XA00687F	XA00679F
BL	ATEX: II 1/2/3 G Ex nA [ia Ga] IIC T6-T1 Ga/Gb/Gc	▪ FMR53 ▪ FMR54	XA00678F	XA00678F	XA00678F	XA00686F	XA00678F
B2	ATEX: II 1/2 G Ex ia IIC T6-T1 Ga/Gb ATEX: II 1/2 D Ex ia IIIC Txx°C Da/Db	▪ FMR53 ▪ FMR54	XA00683F	XA00683F	XA00683F	XA00691F	-
B3	ATEX: II 1/2 G Ex d [ia] IIC T6-T1 Ga/Gb ATEX: II 1/2 D Ex ta IIIC Txx°C Da/Db	▪ FMR53 ▪ FMR54	XA00684F	XA00684F	XA00684F	XA00692F	XA00684F
B4	ATEX:II 1/2 G Ex ia IIC T6-T1 Ga/Gb ATEX: II 1/2 G Ex d [ia] IIC T6-T1 Ga/Gb	▪ FMR53 ▪ FMR54	XA00681F	XA00681F	XA00681F	XA00689F	-
CB	CSA C/US XP Cl.I Div.1 Gr.A-D	FMR54	XA01112F	XA01112F	XA01112F	XA01114F	-
CC	CSA C/US XP Cl.I Div.1 Gr.A-D	FMR54	XA01113F	XA01113F	XA01113F	XA01115F	XA01113F
C2	CSA C/US IS Cl.I,II,III Div.1 Gr.A-G, NI Cl.1 Div. 2, Ex ia	▪ FMR53 ▪ FMR54	XA01112F	XA01112F	XA01112F	XA01114F	-
C3	CSA C/US XP Cl.I,II,III Div.1 Gr.A-G, NI Cl.1 Div.2, Ex d	▪ FMR53 ▪ FMR54	XA01113F	XA01113F	XA01113F	XA01115F	XA01113F
FA	FM IS Cl.I Div.1 Gr.A-D	FMR54	XA01116F	XA01116F	XA01116F	XA01118F	-
FB	FM IS Cl.I,II,III Div.1 Gr.A-G, AEx ia, NI Cl.1 Div.2	▪ FMR53 ▪ FMR54	XA01116F	XA01116F	XA01116F	XA01118F	-
FC	FM XP Cl.I Div.1 Gr.A-D	FMR54	XA01117F	XA01117F	XA01117F	XA01119F	XA01117F
FD	FM XP Cl.I,II,III Div.1 Gr.A-G, AEx d, NI Cl.1 Div.2	▪ FMR53 ▪ FMR54	XA01117F	XA01117F	XA01117F	XA01119F	XA01117F
IA	IECEx: Ex ia IIC T6-T1 Ga	▪ FMR53 ▪ FMR54	XA00677F	XA00677F	XA00677F	XA00685F	-
IB	IECEx: Ex ia IIC T6-T1 Ga/Gb	▪ FMR53 ▪ FMR54	XA00677F	XA00677F	XA00677F	XA00685F	-
IC	IECEx: Ex d [ia] IIC T6-T1 Ga/Gb	▪ FMR53 ▪ FMR54	XA00680F	XA00680F	XA00680F	XA00688F	XA00680F
ID	IECEx: Ex ic [ia Ga] IIC T6-T1 Ga/Gb/Gc	▪ FMR53 ▪ FMR54	XA00678F	XA00678F	XA00678F	XA00686F	XA00678F
IG	IECEx: Ex nA IIC T6-T1 Gc	▪ FMR53 ▪ FMR54	XA00679F	XA00679F	XA00679F	XA00687F	XA00679F
IH	IECEx: Ex ic IIC T6-T1 Gc	▪ FMR53 ▪ FMR54	XA00679F	XA00679F	XA00679F	XA00687F	XA00679F
IL	IECEx: Ex nA [ia Ga] IIC T6-T1 Ga/Gb/Gc	▪ FMR53 ▪ FMR54	XA00678F	XA00678F	XA00678F	XA00686F	XA00678F

Feature 010	Approval	Available for	Feature 020 "Power Supply; Output"				
			A [1]	B [2]	C [3]	E [4]/G [5]	K [6]/L [7]
I2	IECEx: Ex ia IIC T6-T1 Ga/Gb IECEx: Ex ia IIIC Txx°C Da/Db	▪ FMR53 ▪ FMR54	XA00683F	XA00683F	XA00683F	XA00691F	-
I3	IECEx: Ex d [ia] IIC T6-T1 Ga/Gb IEXEx: Ex ta IIIC Txx°C Da/Db	▪ FMR53 ▪ FMR54	XA00684F	XA00684F	XA00684F	XA00692F	XA00684F
I4	IECEx: Ex ia IIC T6-T1 Ga/Gb IECEx: Ex d [ia] IIC T6-T1 Ga/Gb	▪ FMR53 ▪ FMR54	XA00681F	XA00681F	XA00681F	XA00689F	-
JC	JPN Ex d [ia] IIC T4 Ga/Gb	▪ FMR53 ▪ FMR54	XA01717F	XA01717F	-	-	-
JD	JPN Ex d [ia] IIC T1 Ga/Gb	FMR54	XA01717F	XA01717F	-	-	-
JE	JPN Ex d [ia] IIC T2 Ga/Gb	FMR54	XA01717F	XA01717F			
KA	KC Ex ia IIC T6 Ga	▪ FMR53 ▪ FMR54	XA01045F	XA01045F	XA01045F	XA01047F	-
KB	KC Ex ia IIC T6 Ga/Gb	▪ FMR53 ▪ FMR54	XA01045F	XA01045F	XA01045F	XA01047F	-
KC	KC Ex d[ia] IIC T6	▪ FMR53 ▪ FMR54	XA01046F	XA01046F	XA01046F	XA01048F	XA01046F
MA	INMETRO: Ex ia IIC T6 Ga	▪ FMR53 ▪ FMR54	XA01286F	XA01287F	XA01288F	XA01296F	-
MC	INMETRO: Ex d[ia] IIC T6 Ga/Gb	▪ FMR53 ▪ FMR54	XA01292F	XA01292F	XA01293F	XA01298F	XA01294F
MH	INMETRO: Ex ic IIC T6 Gc	▪ FMR53 ▪ FMR54	XA01289F	XA01290F	XA01291F	XA01297F	-
NA	NEPSI Ex ia IIC T6 Ga	▪ FMR53 ▪ FMR54	XA01199F	XA01199F	XA01199F	XA01208F	-
NB	NEPSI Ex ia IIC T6 Ga/Gb	▪ FMR53 ▪ FMR54	XA01199F	XA01199F	XA01199F	XA01208F	-
NC	NEPSI Ex d[ia] IIC T6 Ga/Gb	▪ FMR53 ▪ FMR54	XA01202F	XA01202F	XA01202F	XA01211F	XA01202F
NG	NEPSI Ex nA II T6 Gc	▪ FMR53 ▪ FMR54	XA01201F	XA01201F	XA01201F	XA01210F	XA01201F
NH	NEPSI Ex ic IIC T6 Gc	▪ FMR53 ▪ FMR54	XA01201F	XA01201F	XA01201F	XA01210F	XA01201F
N2	NEPSI Ex ia IIC T6 Ga/Gb, Ex iaD 20/21 T85... 90oC	▪ FMR53 ▪ FMR54	XA01205F	XA01205F	XA01205F	XA01214F	-
N3	NEPSI Ex d[ia] IIC T6 Ga/Gb, DIP A20/21 T85...90oC IP66	▪ FMR53 ▪ FMR54	XA01206F	XA01206F	XA01206F	XA01215F	XA01206F
8A	FM/CSA IS+XP Cl.I,II,III Div.1 Gr.A-G	▪ FMR53 ▪ FMR54	▪ XA01112F ▪ XA01113F ▪ XA01116F ▪ XA01117F	▪ XA01112F ▪ XA01113F ▪ XA01116F ▪ XA01117F	▪ XA01112F ▪ XA01113F ▪ XA01116F ▪ XA01117F	▪ XA01114F ▪ XA01115F ▪ XA01118F ▪ XA01119F	-

1) 2-wire; 4-20mA HART
2) 2-wire; 4-20mA HART, switch output
3) 2-wire; 4-20mA HART, 4-20mA
4) 2-wire; FOUNDATION Fieldbus, switch output
5) 2-wire; PROFIBUS PA, switch output
6) 4-wire 90-253VAC; 4-20mA HART
7) 4-wire 10.4-48VDC; 4-20mA HART

For certified devices the relevant Safety Instructions (XA) are indicated on the nameplate.

If the device is prepared for the remote display FHX50 (product structure: feature 030: Display, Operation", option L or M), the Ex marking of some certificates changes according to the following table [1)]:

Feature 010 ("Approval")	Feature 030 ("Display, Operation")	Ex marking
BG	L, M or N	ATEX II 3G Ex nA [ia Ga] IIC T6-T1 Gc
BH	L, M or N	ATEX II 3G Ex ic [ia Ga] IIC T6-T1 Gc
B3	L, M or N	ATEX II 1/2G Ex d [ia] IIC T6-T1 Ga/Gb, ATEX II 1/2D Ex ta [ia Db] IIIC Txx°C Da/Db
IG	L, M or N	IECEx Ex nA [ia Ga] IIC T6-T1 Gc
IH	L, M or N	IECEx Ex ic [ia Ga] IIC T6-T1 Gc
I3	L, M or N	IECEx Ex d [ia] IIC T6-T1 Ga/Gb, IECEx Ex ta [ia Db] IIIC Txx°C Da/Db
MH	L, M or N	Ex ic [ia Ga] IIC T6 Gc
NG	L, M or N	NEPSI Ex nA [ia Ga] IIC T6-T1 Gc
NH	L, M or N	NEPSI Ex ic [ia Ga] IIC T6-T1 Gc
N3	L, M or N	NEPSI Ex d [ia] IIC T6-T1 Ga/Gb, DIP A20/21 [ia D] TA, Txx°C IP6X

1) The marking of certificates not mentioned in this table are not affected by the FHX50.

3 Product description

3.1 Product design

3.1.1 Micropilot FMR53

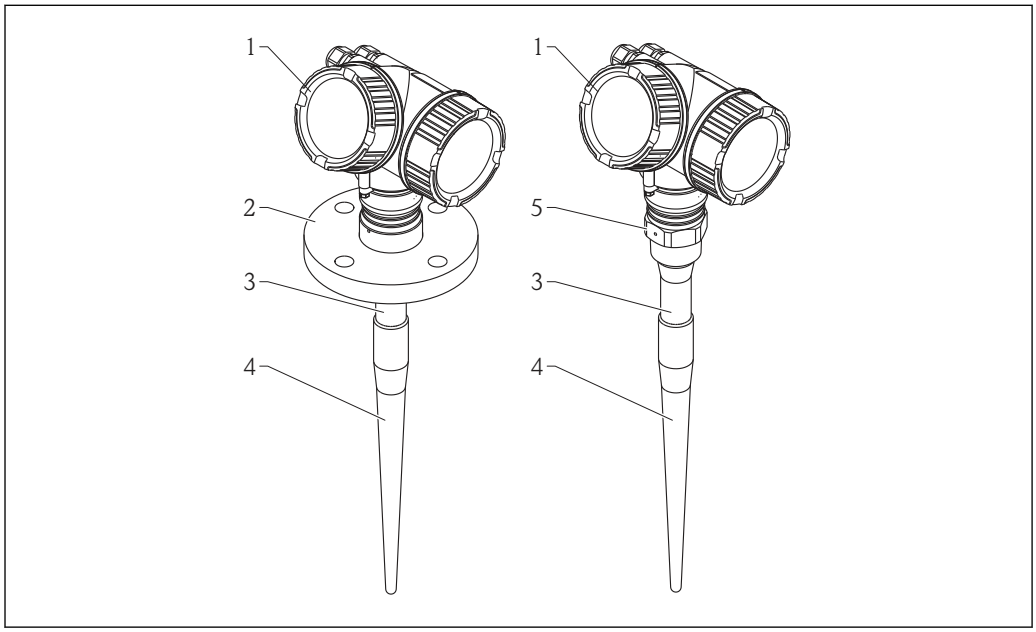

1 Design of the Micropilot FMR53 (6 GHz)

1 Electronics housing
2 Flange
3 Inactive length
4 Active part of the antenna
5 Process connection (Thread)

3.1.2 Micropilot FMR54

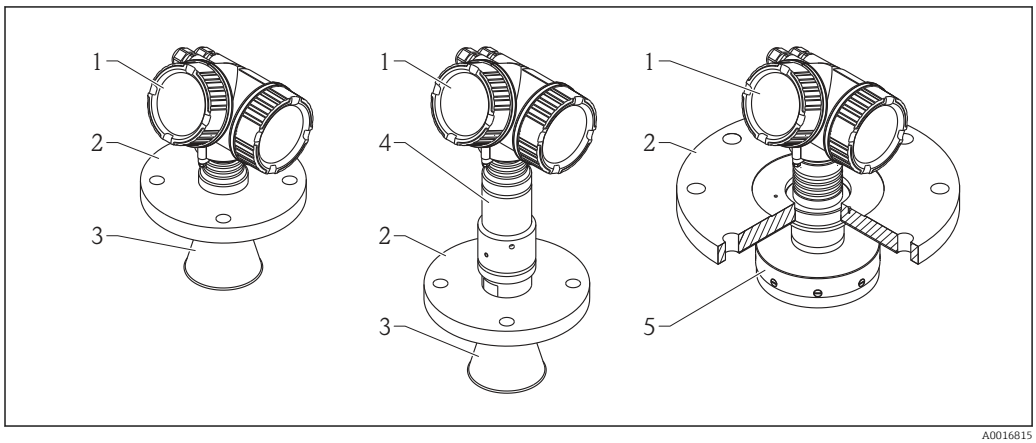

2 Design of the Micropilot FMR54 (6 GHz)

1 Electronics housing
2 Flange
3 Horn antenna
4 High temperature antenna fitting
5 Planar antenna

3.1.3 Electronics housing

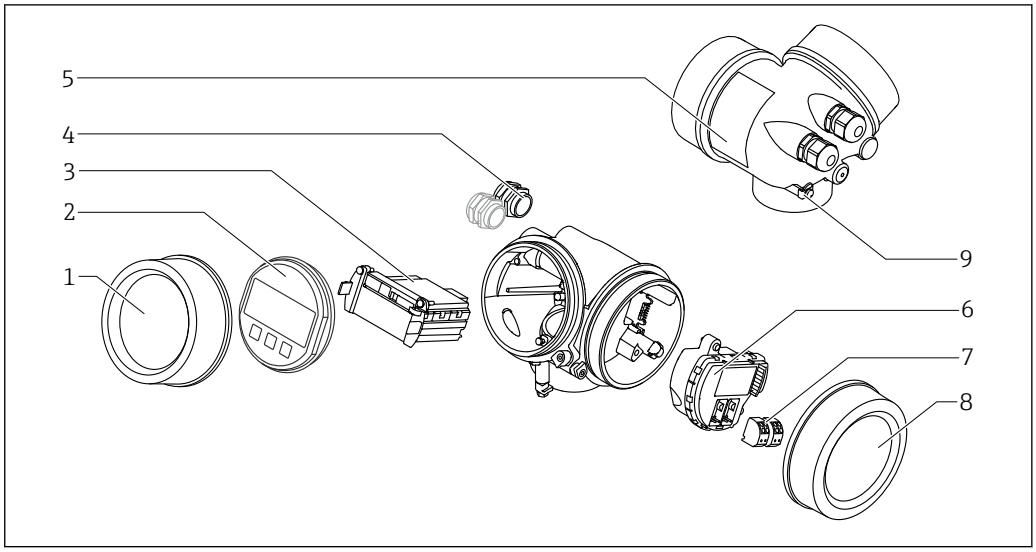

3 Design of the electronics housing

1 Electronics compartment cover
2 Display module
3 Main electronics module
4 Cable glands (1 or 2, depending on instrument version)
5 Nameplate
6 I/O electronics module
7 Terminals (pluggable spring terminals)
8 Connection compartment cover
9 Grounding terminal

4 Incoming acceptance and product identification

4.1 Incoming acceptance

Upon receipt of the goods check the following:
- Are the order codes on the delivery note and the product sticker identical?
- Are the goods undamaged?
- Do the nameplate data match the ordering information on the delivery note?
- Is the DVD with the operating tool present?
  If required (see nameplate): Are the Safety Instructions (XA) present?

If one of these conditions is not satisfied, contact your Endress+Hauser Sales Center.

4.2 Product identification

The following options are available for identification of the measuring device:
- Nameplate specifications
- Extended order code with breakdown of the device features on the delivery note
- Enter serial numbers from nameplates in *W@M Device Viewer* (www.endress.com/deviceviewer): All information about the measuring device is displayed.
- Enter the serial number from the nameplates into the *Endress+Hauser Operations App* or scan the 2-D matrix code (QR code) on the nameplate with the *Endress+Hauser Operations App*: all the information for the measuring device is displayed.

For an overview of the scope of the associated Technical Documentation, refer to the following:
- The *W@M Device Viewer*: Enter the serial number from the nameplate (www.endress.com/deviceviewer)
- The *Endress+Hauser Operations App*: Enter the serial number from the nameplate or scan the 2-D matrix code (QR code) on the nameplate.

4.2.1 Nameplate

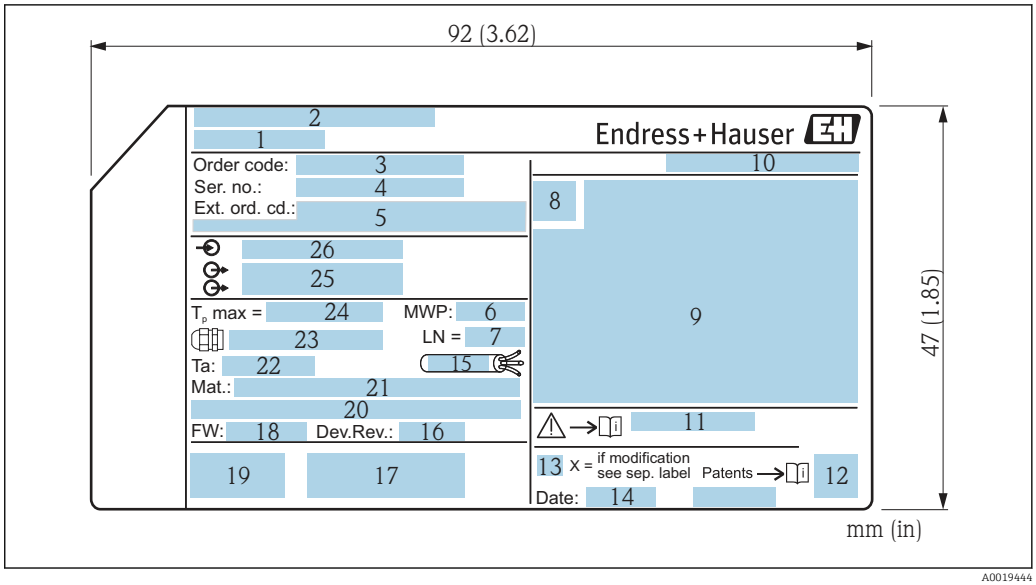

4 *Nameplate of the Micropilot*

1 *Device name*
2 *Address of manufacturer*
3 *Order code*
4 *Serial number (Ser. no.)*
5 *Extended order code (Ext. ord. cd.)*
6 *Process pressure*
7 *Antenna length (only for FMR51 with antenna extension)*
8 *Certificate symbol*
9 *Certificate and approval relevant data*
10 *Degree of protection: e.g. IP, NEMA*
11 *Document number of the Safety Instructions: e.g. XA, ZD, ZE*
12 *Data Matrix Code*
13 *Modification mark*
14 *Manufacturing date: year-month*
15 *Temperature resistance of the cable*
16 *Device revision*
17 *Additional information about the device version (certificates, approvals, communication): e.g. SIL, PROFIBUS*
18 *Firmware version (FW)*
19 *CE mark, C-Tick*
20 *Profibus PA: Profil-Version; FOUNDATION Fieldbus: Device ID*
21 *Material in contact with process*
22 *Permitted ambient temperature (T_a)*
23 *Size of the thread of the cable glands*
24 *Maximum process temperature*
25 *Signal outputs*
26 *Operating voltage*

Only 33 digits of the extended order code can be indicated on the nameplate. If the extended order code exceeds 33 digits, the rest will not be shown. However, the complete extended order code can be viewed in the operating menu of the device: **Extended order code 1 to 3** parameter

5 Storage, Transport

5.1 Storage conditions

- Permitted storage temperature: −40 to +80 °C (−40 to +176 °F)
- Use the original packaging.

5.2 Transport product to the measuring point

NOTICE

Housing or antenna horn may be damaged or break away.

Risk of injury!

- ▶ Transport the measuring device to the measuring point in its original packaging or at the process connection.
- ▶ Do not fasten lifting devices (hoisting slings, lifting eyes etc.) at the housing or the antenna horn but at the process connection. Take into account the mass center of the device in order to avoid unintended tilting.
- ▶ Comply with the safety instructions, transport conditions for devices over 18kg (39.6lbs) (IEC61010).

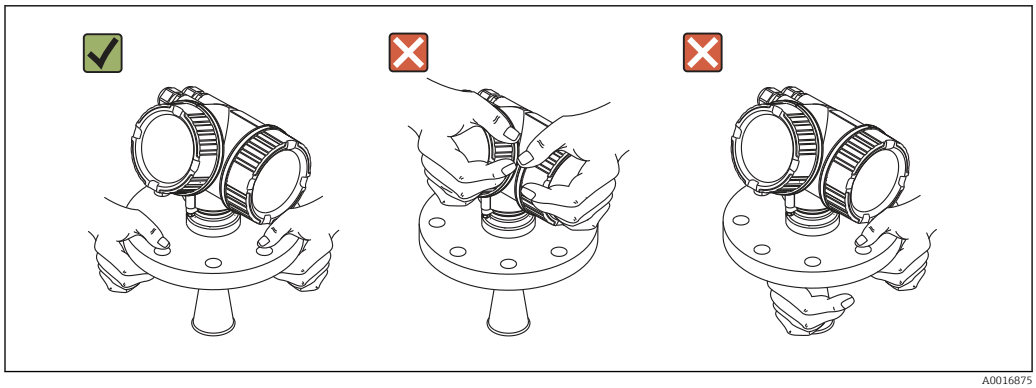

A0016875

6 Installation

6.1 Installation conditions

6.1.1 Mounting position

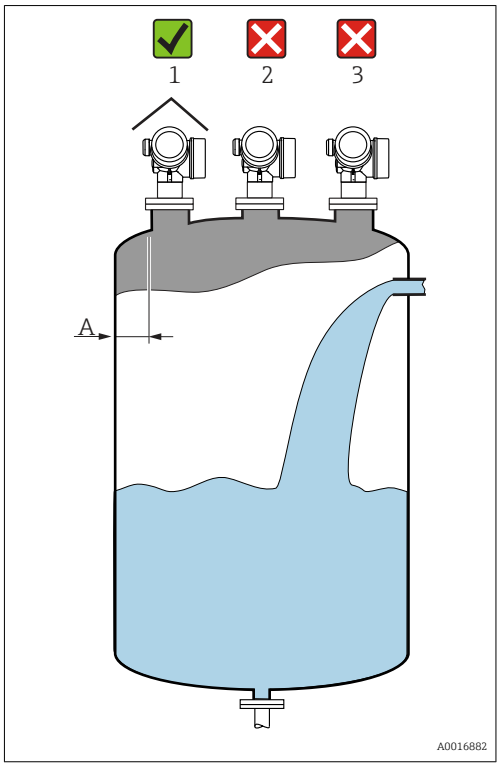

- Recommended distance **A** from wall to outer edge of nozzle: ~ 1/6 of tank diameter.
  Nevertheless the device should not be installed closer than 30 cm (11.8 in) to the tank wall.
- Not in the center (2), as interference can cause signal loss.
- Not above the fill stream (3).
- It is recommended to us a weather protection cover (1) in order to protect the device from direct sun or rain.

6.1.2 Vessel installations

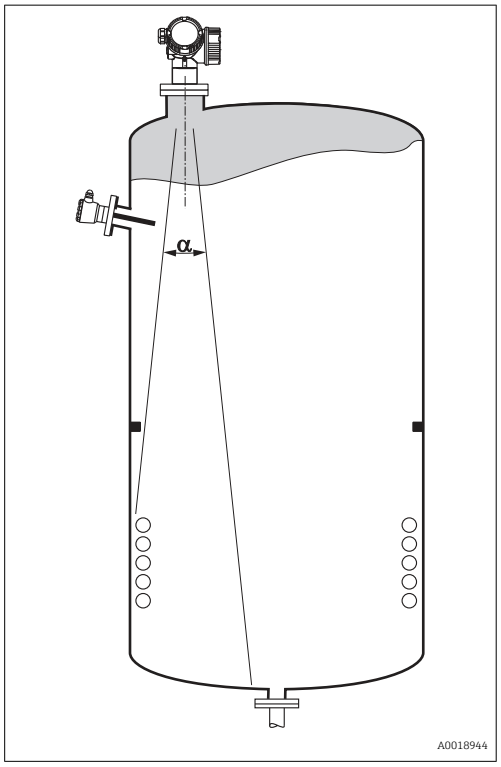

Avoid any installations (point level switches, temperature sensors, braces, vacuum rings, heating coils, baffles etc.) inside the signal beam. Take into account the beam angle → 24.

6.1.3 Reduction of interference echoes

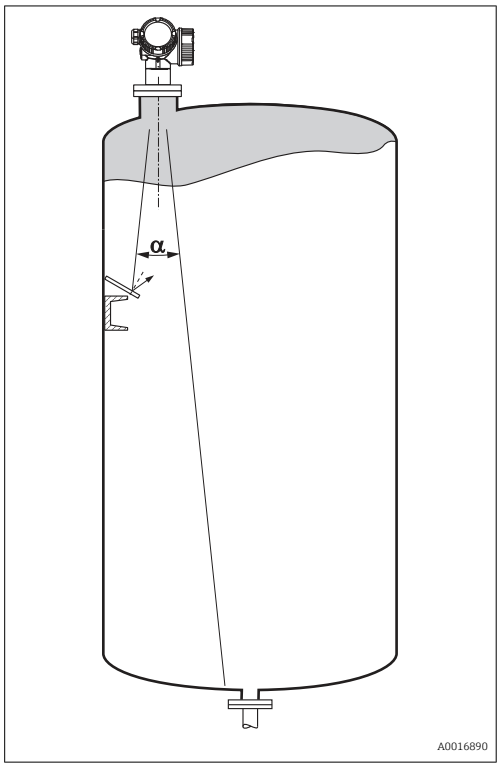

Metallic screens mounted at a slope spread the radar signal and can, therefore, reduce interference echoes.

6.1.4 Measurement in a plastic vessel

If the outer wall of the vessel is made of a non-conductive material (e.g. GRP), microwaves can also be reflected off interfering installations outside the vessel (e.g. metallic pipes (1), ladders (2), grates (3), ...). Therefore, there should be no such interfering installations in the signal beam. Please contact Endress+Hauser for further information.

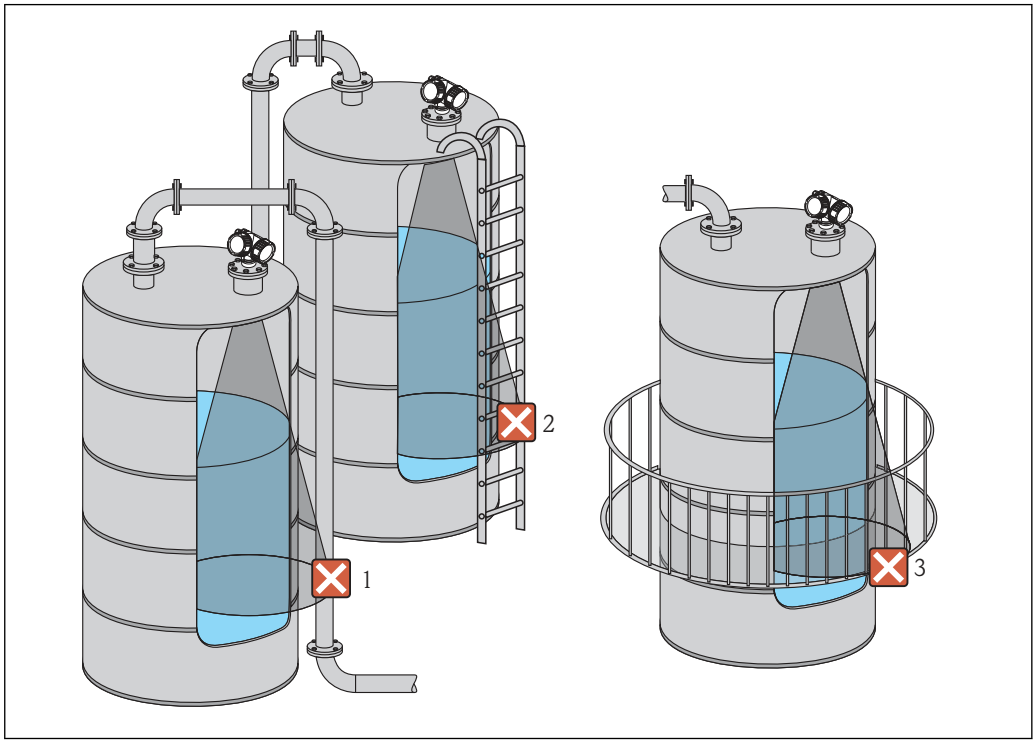

6.1.5 Optimization options

- Antenna size
  The bigger the antenna, the smaller the beam angle α and the fewer interference echoes → 📄 24.
- Mapping
  The measurement can be optimized by means of electronic suppression of interference echoes.
  See the **Confirm distance** parameter (→ 📄 134) for details.
- Antenna alignment
  Take into account the marker on the flange or threaded connection .
- Stilling well
  A stilling well can be applied to avoid interferences → 📄 30.
- Metallic screens mounted at a slope
  They spread the radar signals and can, therefore, reduce interference echoes.

6.1.6 Beam angle

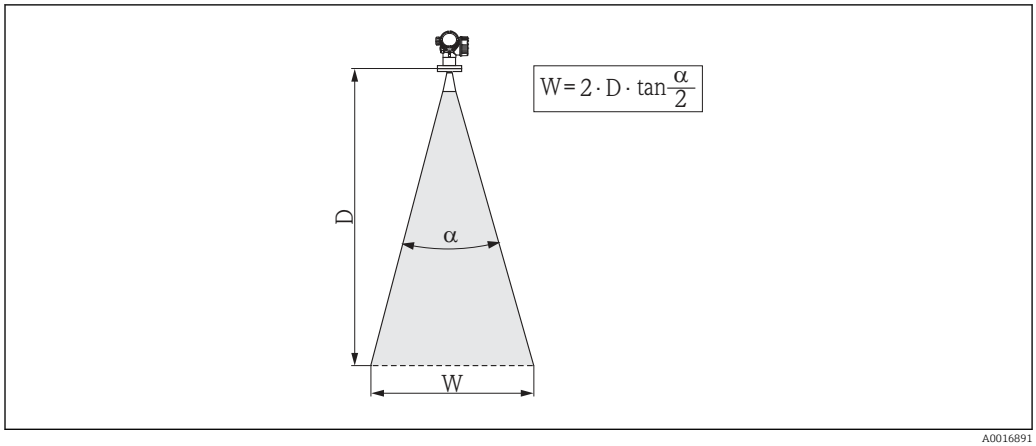

5 Relationship between beam angle α, distance D and beamwidth diameter W

The beam angle is defined as the angle α where the energy density of the radar waves reaches half the value of the maximum energy density (3-dB-width). Microwaves are also emitted outside the signal beam and can be reflected off interfering installations.

Beam diameter **W** as a function of beam angle **α** and measuring distance **D**:

FMR53	
Beam angle α	23°
Measuring distance (D)	**Beamwidth diameter W**
3 m (9.8 ft)	1.22 m (4 ft)
6 m (20 ft)	2.44 m (8 ft)
9 m (30 ft)	3.66 m (12 ft)
12 m (39 ft)	4.88 m (16 ft)
15 m (49 ft)	6.1 m (20 ft)
20 m (66 ft)	8.14 m (27 ft)

FMR54 - Horn antenna			
Antenna size	150 mm (6 in)	200 mm (8 in)	250 mm (10 in)
Beam angle α	23°	19°	15°
Distance (D)	**Beamwidth diameter W**		
3 m (9.8 ft)	1.22 m (4 ft)	1 m (3.3 ft)	0.79 m (2.6 ft)
6 m (20 ft)	2.44 m (8 ft)	2.01 m (6.6 ft)	1.58 m (5.2 ft)
9 m (30 ft)	3.66 m (12 ft)	3.01 m (9.9 ft)	2.37 m (7.8 ft)
12 m (39 ft)	4.88 m (16 ft)	4.02 m (13 ft)	3.16 m (10 ft)
15 m (49 ft)	6.1 m (20 ft)	5.02 m (16 ft)	3.95 m (13 ft)
20 m (66 ft)	8.14 m (27 ft)	6.69 m (22 ft)	5.27 m (17 ft)

6.2 Measuring conditions

- In case of **boiling surfaces**, **bubbling** or tendency for **foaming** use FMR53 or FMR54. Depending on its consistence, foam can either absorb microwaves or reflect them off the foam surface. Measurement is possible under certain conditions. For FMR50, FMR51 and FMR52, the additional option "Advanced dynamics" is recommended in these cases (feature 540: "Application Package", option EM).
- In case of heavy **steam development** or **condensate**, the maximum measuring range of FMR50, FMR51 and FMR52 may decrease depending on density, temperature and composition of the steam → use FMR53 or FMR54.
- For the measurement of absorbing gases such as **ammonia NH_3** or some **fluorocarbons** [2], please use Levelflex or Micropilot FMR54 in a stilling well.
- The measuring range begins, where the beam hits the tank bottom. Particularly with dish bottoms or conical outlets the level cannot be detected below this point.
- In stilling well applications, the electromagnetic waves do not propagate completely outside the tube. It must be taken into account that the accuracy may be reduced in the area **C**. In order to guarantee the required accuracy in these cases, it is recommended to position the zero-point at a distance **C** above the end of the tube (see figure).
- In case of media with a low dielectric constant (ε_r = 1.5 to 4) [3] the tank bottom can be visible through the medium at low levels (low height **C**). Reduced accuracy has to be expected in this range. If this is not acceptable, we recommend positioning the zero point at a distance **C** (see figure) above the tank bottom in these applications.
- In principle it is possible to measure up to the tip of the antenna with FMR51, FMR53 and FMR54. However, due to considerations regarding corrosion and build-up, the end of the measuring range should not be chosen any closer than **A** (see figure) to the tip of the antenna.
- When using FMR54 with planar antenna, especially for media with low dielectric constants, the end of the measuring range should not be closer than **A: 1 m (3.28 ft)** to the flange.
- The smallest possible measuring range **B** depends on the antenna version (see figure).
- The tank height should be at least **H** (see table).

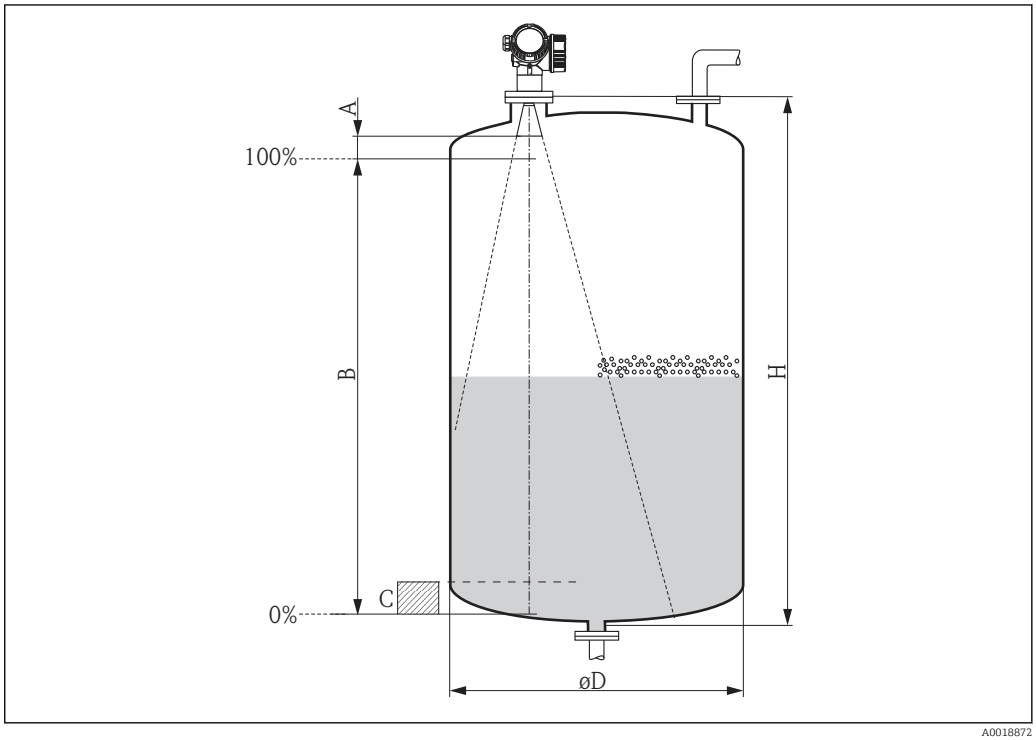

A0018872

2) Affected compounds are e.g. R134a, R227, Dymel 152a.

3) Dielectric constants of important media commonly used in various industries are summarized in the DC manual (CP01076F) and in the Endress +Hauser "DC Values App" (available for Android and iOS).

Device	A	B	C	H
FMR53	50 mm (1.97 in)	> 0.5 m (1.6 ft)	150 to 300 mm (5.91 to 11.8 in)	> 1.5 m (4.9 ft)
FMR54 - horn antenna	50 mm (1.97 in)			
FMR54 - planar antenna	1 m (3.28 ft)			

6.3 Mounting cladded flanges

For cladded flanges of FMR53, observe the following:
- Use flange screws according to the number of flange holes.
- Tighten the screws with the required torque (see table).
- Retighten the screws after 24 hours or after the first temperature cycle.
- Depending on process pressure and process temperature check and retighten the screws at regular intervals.

Usually, the PTFE flange cladding also serves as a seal between the nozzle and the device flange.

Flange size	Number of screws	Recommended torque [Nm]	
		minimum	maximum
EN			
DN50/PN16	4	45	65
DN80/PN16	8	40	55
DN100/PN16	8	40	60
DN150/PN16	8	75	115
ASME			
2"/150lbs	4	40	55
3"/150lbs	4	65	95
4"/150lbs	8	45	70
6"/150lbs	8	85	125
JIS			
10K 50A	4	40	60
10K 80A	8	25	35
10K 100A	8	35	55
10K 100A	8	75	115

6.4 Installation in vessel (free space)

6.4.1 Rod antenna (FMR53)

Alignment

- Align the antenna vertically to the product surface.
- A marking at the flange (somwhere between the flange holes) or the boss enables alignment of the antenna. This marking must be aligned towards the tank wall as well as possible.

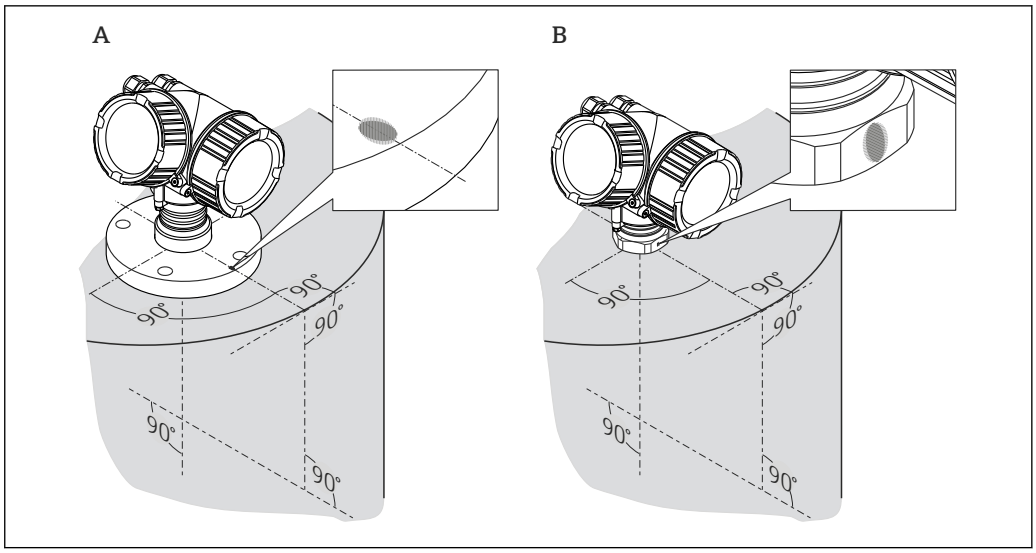

A0018974

Depending on the device version the marking may be a circle or two short parallel lines.

Nozzle mounting

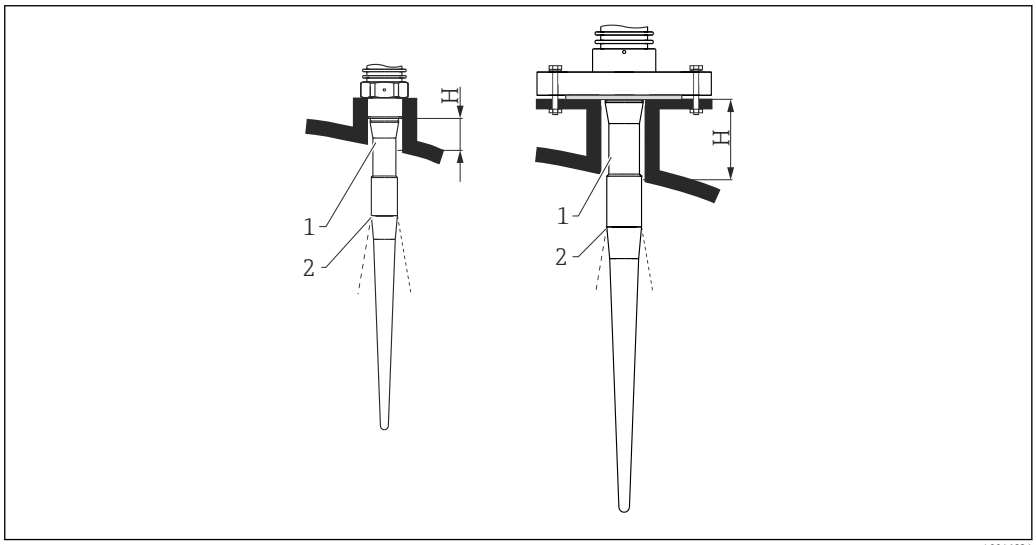

A0016821

6 *Nozzle height an diameter for the rod antenna (FMR53)*

1 *Inactive lengthof the antenna*
2 *Beam launched here*

Antenna length	390 mm (15.4 in)	540 mm (21.3 in)
Nozzle height H	< 100 mm (3.94 in)	< 250 mm (9.84 in)

The inactive part (1) of the rod antenna must extend below the nozzle.

- For flanges with PTFE cladding: Observe the notes on the mounting of cladded flanges → 26.
- Usually, the PTFE flange cladding also serves as a seal between the nozzle and the device flange.

Threaded connection

- Tighten with the hexagonal nut only.
- Tool : 55 mm hexagonal wrench
- Maximum permissible torque:
  - Thread PVDF: 35 Nm (26 lbf ft)
  - Thread 316L: 60 Nm (44 lbf ft)

6.4.2 Horn antenna (FMR54)

Alignment

- Align the antenna vertically to the product surface.
- A marking at the flange (somwhere between the flange holes) enables alignment of the antenna. This marking must be aligned towards the tank wall as well as possible.

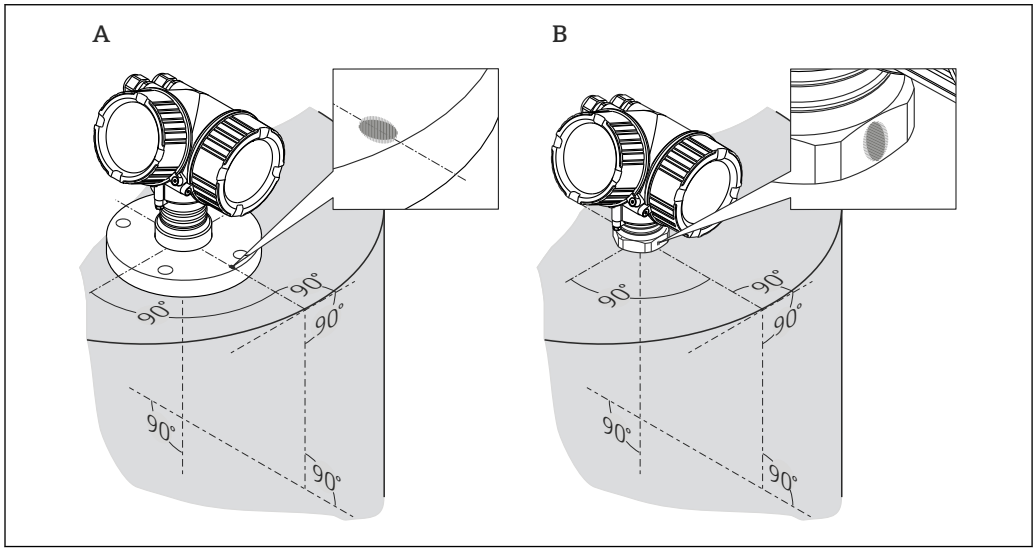

Depending on the device version the marking may be a circle or two short parallel lines.

Nozzle mounting

The horn antenna must extend below the nozzle; if necessary select the device version with antenna extension 100 to 400 mm (4 to 16 in) [4].

4) See product structure: feature 610 "Accessory Mounted", options OM, ON, OR, OS.

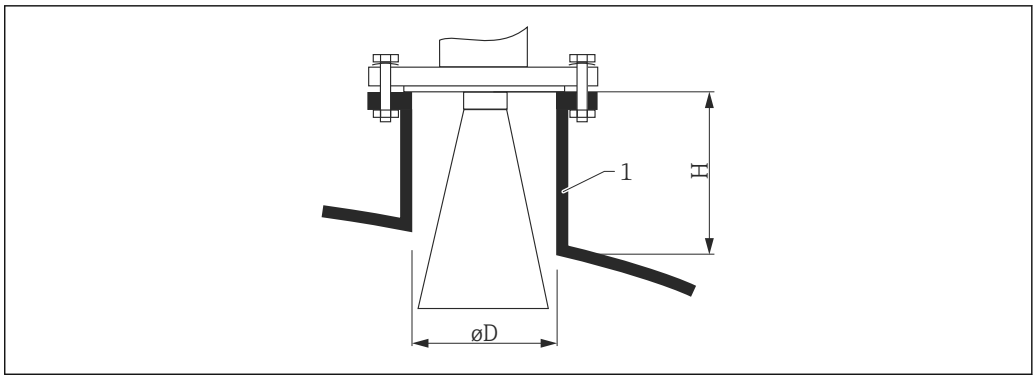

7 *Nozzle height and diameter for the horn antenna (FMR54)*

1 Mounting nozzle

Antenna [1]	**Nozzle diameter** *D*	**Maximum nozzle height** H_{max} [2]
BE: 150mm/6"	146 mm (5.75 in)	185 mm (7.28 in)
BF: 200mm/8"	191 mm (7.52 in)	268 mm (10.6 in)
BG: 250mm/10"	241 mm (9.49 in)	360 mm (14.2 in)

1) Feature 070 of the product structure; the antenna versions BC (Horn 80mm/3") and BD (Horn 100mm/4") should not be mounted directly into the tank. They are only suited for bypass and stilling well applications.
2) valid for antennas without antenna extension

Measurement from the outside through plastic walls

- Dielectric constant of the medium: $\varepsilon_r > 10$
- If possible use the 250 mm (10 in) antenna.
- The distance between the lower edge of the antenna and the tank should be about 100 mm (4 in).
- If possible, avoid mounting location where condensation or build-up might occur.
- In case of outdoor mounting, the space between antenna and vessel has to be protected from the elements.
- Do not mount any potential reflectors (e.g. pipes) outside the tank in the signal beam.

Suitable thickness of the tank ceiling

Penetrated material	PE	PTFE	PP	Plexiglas
DK / ε_r	2.3	2.1	2.3	3.1
Optimum thickness	16 mm (0.65 in)	17 mm (0.68 in)	16 mm (0.65 in)	14 mm (0.56 in)

6.4.3 Planar antenna (FMR54)

The planar antenna is only suited for stilling well applications . It can not be used for free space applications.

6.5 Installation in stilling well

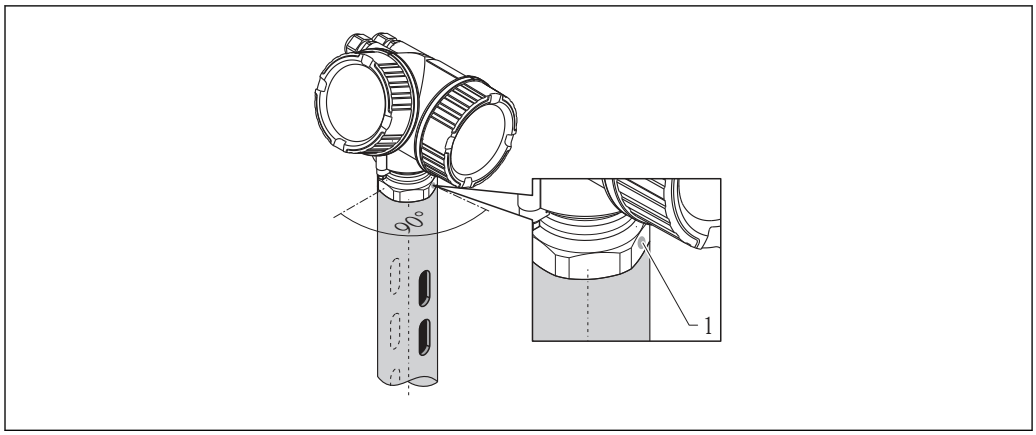

8 Installation in stilling well

1 Marking for antenna alignment

- For horn antenna: Align the marking towards the slots of the stilling well.
- No alignment is required for planar antennas.
- Measurements can be performed through an open full bore ball valve without any problems.
- After mounting, the housing can be turned 350° in order to facilitate access to the display and the terminal compartment → 34.

6.5.1 Recommendations for the stilling well

- Metal (no enamel coating; plastic on request).
- Constant diameter.
- Diameter of stilling well not larger than antenna diameter.
- Diameter difference between horn antenna and inner diameter of the stilling well as small as possible.
- Weld seam as smooth as possible and on the same axis as the slots.
- Slots offset 180° (not 90°).
- Slot width or diameter of holes max. 1/10 of pipe diameter, de-burred. Length and number do not have any influence on the measurement.
- Select horn antenna as big as possible. For intermedaite sizes (e.g. 180 mm (7 in)) select next larger antenna and adapt it mechanically (for horn antennas)
- At any transition (i.e. when using a ball valve or mending pipe segments), no gap may be left exceeding 1 mm (0.04 in).
- The stilling well must be smooth on the inside (average roughness $R_z \leq$ 6.3 µm (248 µin)). Use extruded or parallel welded metal pipe. An extension of the pipe is possible with welded flanges or pipe sleeves. Flange and pipe have to be properly aligned at the inside.
- Do not weld through the pipe wall. The inside of the stilling well must remain smooth. In case of unintentional welding through the pipe, the weld seam and any unevenness on the inside need to be carefully removed and smoothened. Otherwise, strong interference echoes will be generated and material build-up will be promoted.
- In the case of smaller nominal widths flanges must be welded to the pipe such that they allow for a correct orientation (marker aligned toward slots).

The performance of Micropilot FMR54 with planar antenna is not dependent on the alignment or geometry of standard stilling wells. No special alignment is required. However, make sure that the planar antenna is installed vertically relative to the stilling well axis.

6.5.2 Examples for the construction of stilling wells

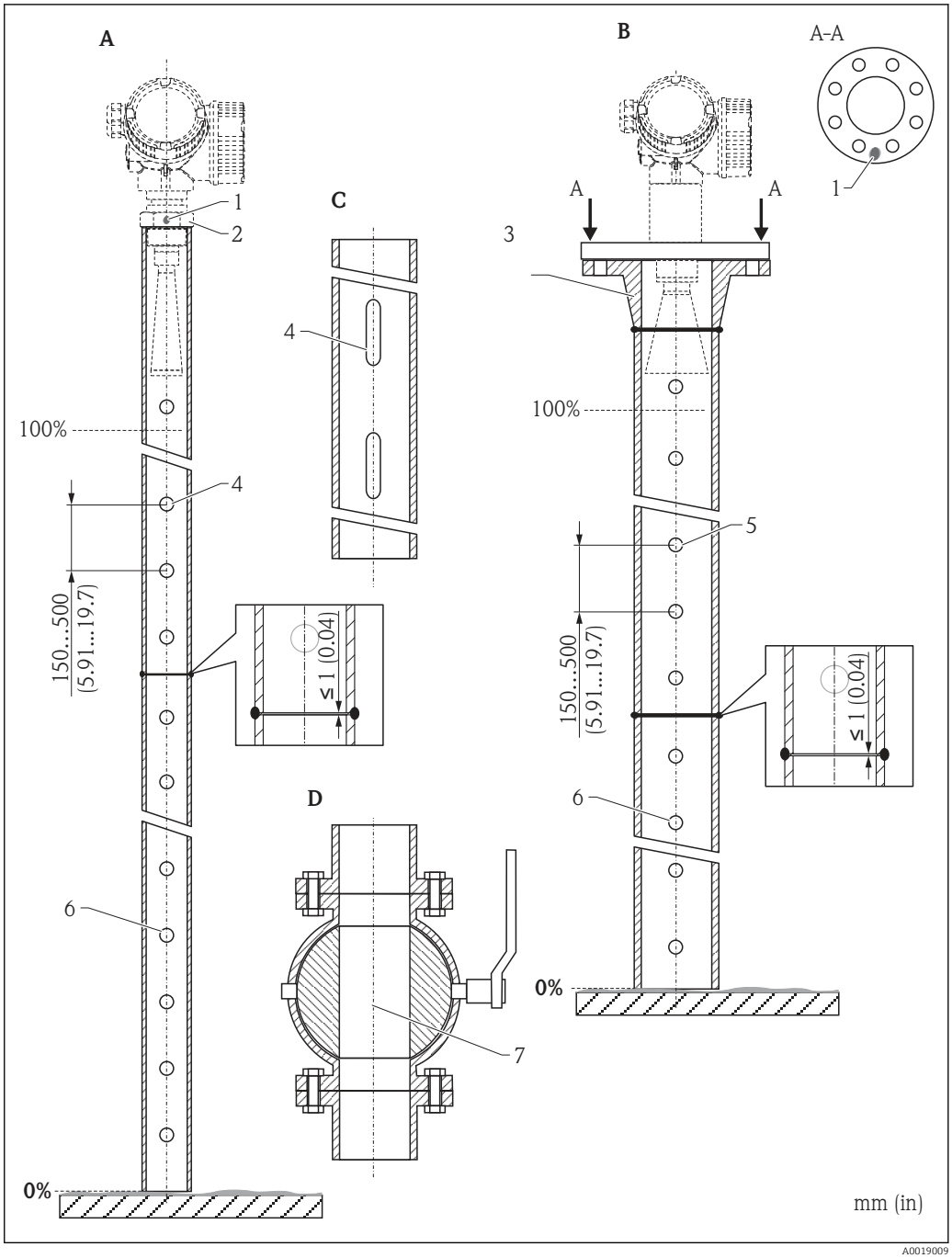

A Micropilot FMR50/FMR51: Horn 40mm(1½")
B Micropilot FMR50/FMR51/FMR52/FMR54: Horn 80mm(3")
C Stilling well with slots
D Full bore ball valve
1 Marking for axial alignment
2 Threaded connection
3 e.g. welding neck flange DIN2633
4 Φ hole max. 1/10 Φ stilling well
5 Φ hole max. 1/10 Φ stilling well; single sided or drilled through
6 Inside of holes deburred
7 Diameter of opening of ball valve must always be equivalent to pipe diameter; avoid edges and constrictions.

6.6 Installation in bypass

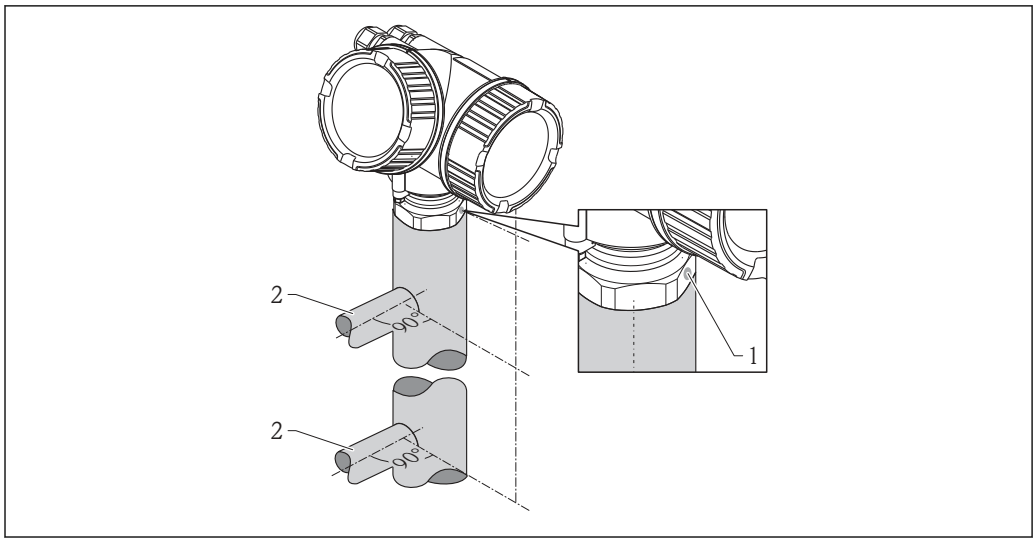

9 *Installation in bypass*

1 Marking for antenna alignment
2 Tank connectors

- Align the marker perpendicular (90°) to the tank connectors.
- Measurements can be performed through an open full bore ball valve without any problems.
- After mounting, the housing can be turned 350° in order to facilitate access to the display and the terminal compartment → 34.

6.6.1 Recommendations for the bypass pipe

- Metal (no plastic or enamel coating).
- Constant diameter.
- Select horn antenna as big as possible. For intermediate sizes (e.g. 95 mm (3.5 in)) select next larger antenna and adapt it mechanically (for horn antennas).
- Diameter difference between horn antenna and inner diameter of the bypass as small as possible.
- At any transition (i.e. when using a ball valve or mending pipe segments), no gap may be created exceeding 1 mm (0.04 in).
- In the area of the tank connections (~ ±20 cm (7.87 in)) a reduced accuracy of the measurement has to be expected.

6.6.2 Example for the construction of a bypass

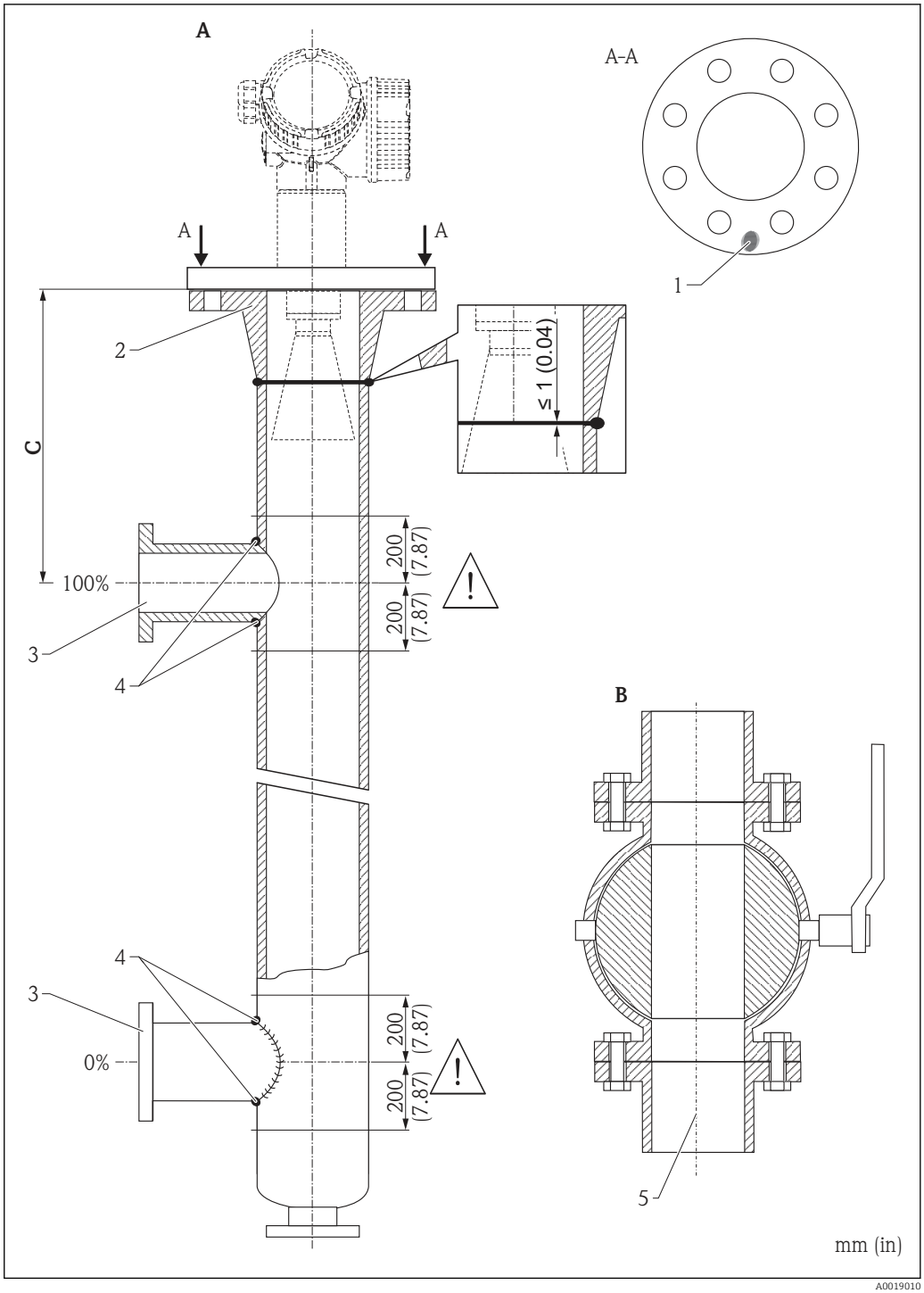

A Micropilot FMR50/FMR51/FMR52/FMR54: Horn 80mm(3")
B Full bore ball valve
C Minimum distance to upper connection pipe: 400 mm (15,7 in)
1 Marking for axial alignment
2 e.g. welding neck flange DIN2633
3 Diameter of the connection pipes as small as possible
4 Do not weld through the pipe wall; the inside of the bypass must remain smooth.
5 Diameter of opening of ball valve must always be equivalent to pipe diameter. Avoid edges and constrictions.

6.7 Container with heat insulation

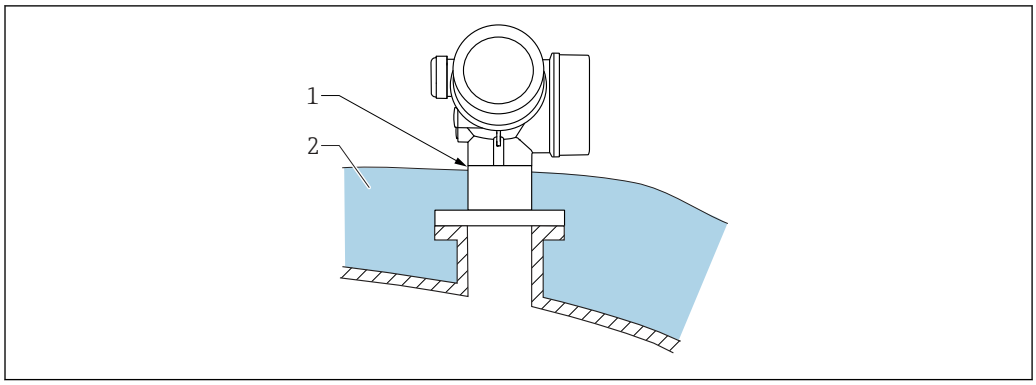

If process temperatures are high, the device should be included in the usual container insulation system (2) to prevent the electronics from heating as a result of thermal radiation or convection. The insulation should not be higher than the neck of the device (1).

6.8 Turning the transmitter housing

To provide easier access to the connection compartment or display module, the transmitter housing can be turned:

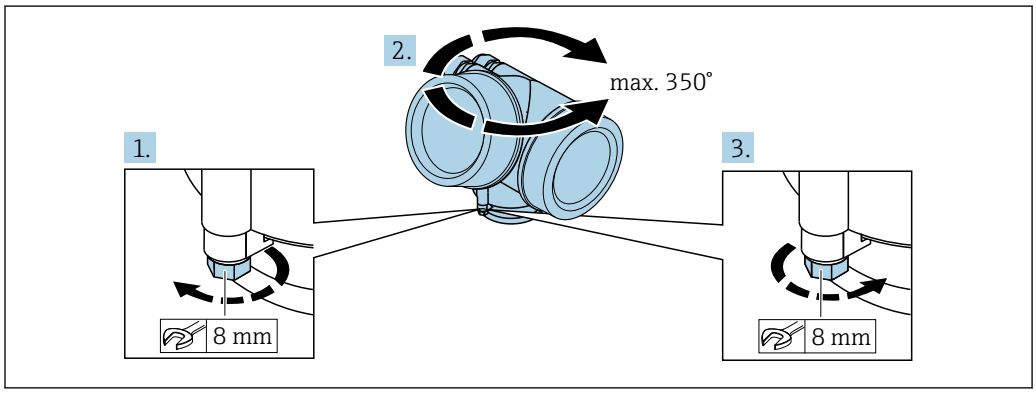

1. Unscrew the securing screw using an open-ended wrench.
2. Rotate the housing in the desired direction.
3. Tighten the securing screw (1.5 Nm for plastic housing; 2.5 Nm for aluminum or stainless steel housing).

6.9 Turning the display

6.9.1 Opening cover

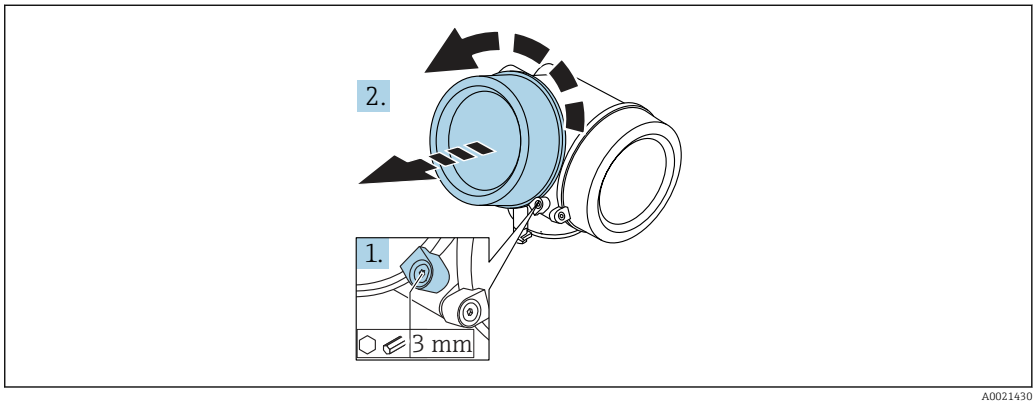

A0021430

1. Loosen the screw of the securing clamp of the electronics compartment cover using an Allen key (3 mm) and turn the clamp 90 ° counterclockwise.
2. Unscrew cover and check lid gasket, replace if necessary.

6.9.2 Turning the display module

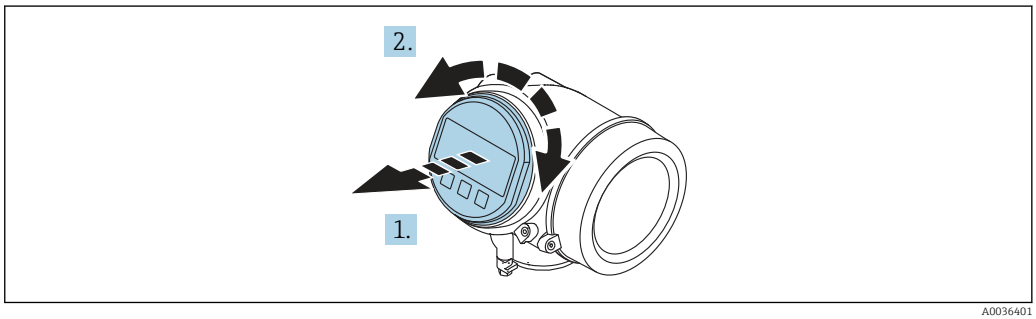

A0036401

1. Pull out the display module with a gentle rotational movement.
2. Rotate the display module to the desired position: max. 8 × 45 ° in each direction.
3. Feed the coiled cable into the gap between the housing and main electronics module and plug the display module into the electronics compartment until it engages.

6.9.3 Closing electronics compartment cover

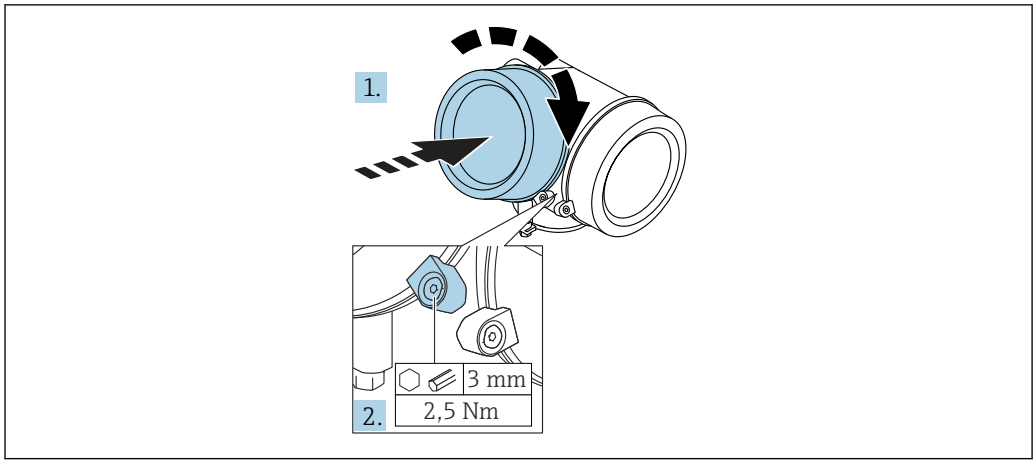

A0021451

1. Screw back firmly electronics compartment cover.
2. Turning securing clamp 90 ° clockwise and tighten the clamp with 2.5 Nm using the Allen key (3 mm).

6.10 Post-installation check

❑	Is the device undamaged (visual inspection)?
❑	Does the device conform to the measuring point specifications? For example: ▪ Process temperature ▪ Process pressure (refer to the chapter on "Material load curves" of the "Technical Information" document) ▪ Ambient temperature range ▪ Measuring range
❑	Are the measuring point identification and labeling correct (visual inspection)?
❑	Is the device adequately protected from precipitation and direct sunlight?
❑	Are the securing screw and securing clamp tightened securely?

7 Electrical connection

7.1 Connection conditions

7.1.1 Terminal assignment

Terminal assignment 4-wire: 4-20 mA HART (90 to 253 V_{AC})

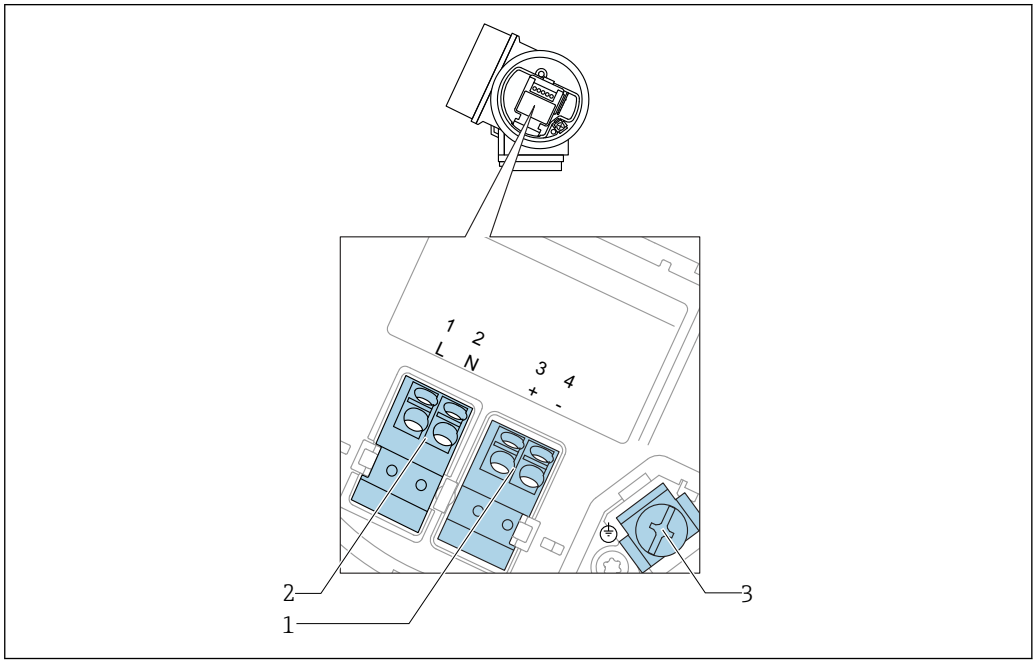

10 *Terminal assignment 4-wire: 4-20 mA HART (90 to 253 V_{AC})*

1 *Connection 4-20 mA HART (active): terminals 3 and 4*
2 *Connection supply voltage: terminals 1 and 2*
3 *Terminal for cable screen*

⚠ CAUTION

To ensure electrical safety:

- ▶ Do not disconnect the protective connection.
- ▶ Disconnect the supply voltage before disconnecting the protective earth.

Connect protective earth to the internal ground terminal (3) before connecting the supply voltage. If necessary, connect the potential matching line to the external ground terminal.

In order to ensure electromagnetic compatibility (EMC): Do **not** only ground the device via the protective earth conductor of the supply cable. Instead, the functional grounding must also be connected to the process connection (flange or threaded connection) or to the external ground terminal.

An easily accessible power switch must be installed in the proximity of the device. The power switch must be marked as a disconnector for the device (IEC/EN61010).

Terminal assignment PROFIBUS PA / FOUNDATION Fieldbus

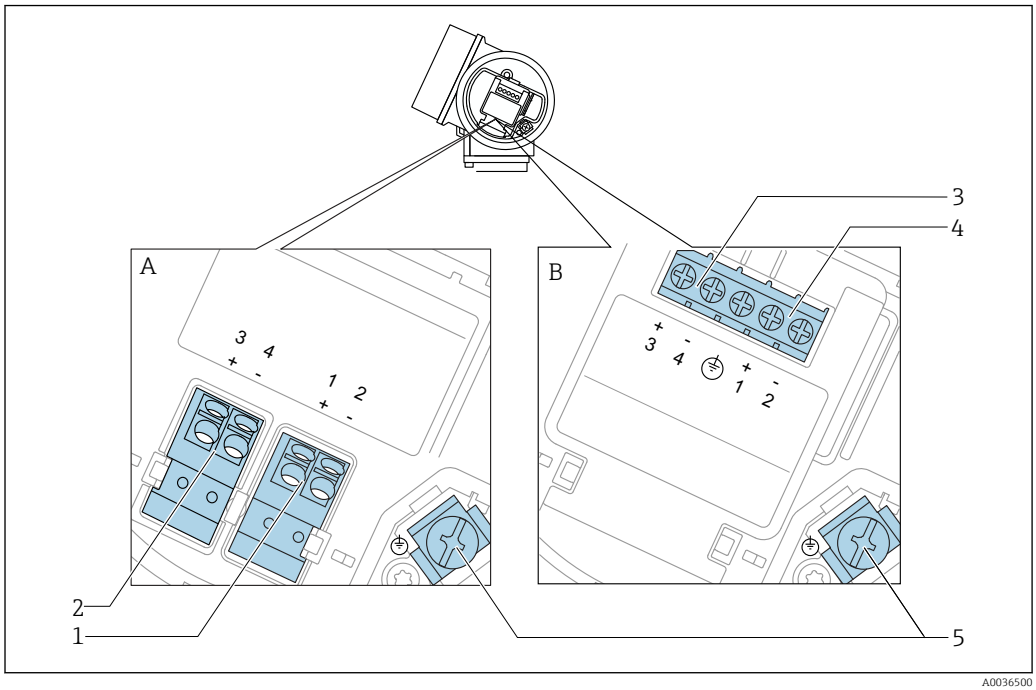

11 *Terminal assignment PROFIBUS PA / FOUNDATION Fieldbus*

A Without integrated overvoltage protection
B With integrated overvoltage protection
1 Connection PROFIBUS PA / FOUNDATION Fieldbus: terminals 1 and 2, without integrated overvoltage protection
2 Connection switch output (Open Collector): terminals 3 and 4, without integrated overvoltage protection
3 Connection switch output (Open Collector): terminals 3 and 4, with integrated overvoltage protection
4 Connection PROFIBUS PA / FOUNDATION Fieldbus: terminals 1 and 2, with integrated overvoltage protection
5 Terminal for cable screen

Block diagram PROFIBUS PA / FOUNDATION Fieldbus

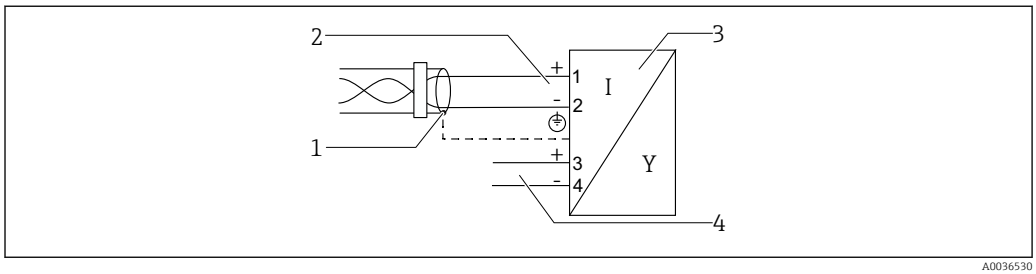

12 *Block diagram PROFIBUS PA / FOUNDATION Fieldbus*

1 Cable screen; observe cable specifications
2 Connection PROFIBUS PA / FOUNDATION Fieldbus
3 Measuring device
4 Switch output (open collector)

Connection examples for the switch output

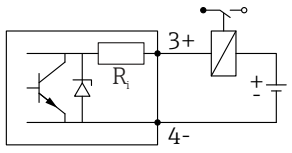

13 Connection of a relay

Suitable relays (examples):
- Solid-state relay: Phoenix Contact OV-24DC/480AC/5 with mounting rail connector UMK-1 OM-R/AMS
- Electromechanical relay: Phoenix Contact PLC-RSC-12DC/21

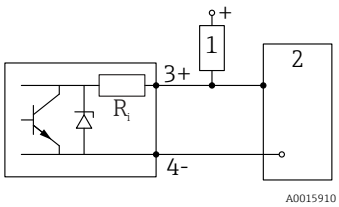

14 Connection of a digital input

1 Pull-up resistor
2 Digital input

For optimum interference immunity we recommend to connect an external resistor (internal resistance of the relay or Pull-up resistor) of < 1 000 Ω.

7.1.2 Cable specification

- **Devices without integrated overvoltage protection**
  Pluggable spring-force terminals for wire cross-sections 0.5 to 2.5 mm² (20 to 14 AWG)
- **Devices with integrated overvoltage protection**
  Screw terminals for wire cross-sections 0.2 to 2.5 mm² (24 to 14 AWG)
- For ambient temperature $T_U \geq 60$ °C (140 °F): use cable for temperature T_U +20 K.

FOUNDATION Fieldbus

Endress+Hauser recommends using twisted, shielded two-wire cables.

For further information on the cable specifications, see Operating Instructions BA00013S "FOUNDATION Fieldbus Overview", FOUNDATION Fieldbus Guideline and IEC 61158-2 (MBP).

7.1.3 Device plug connectors

For the versions with fieldbus plug connector (M12 or 7/8"), the signal line can be connected without opening the housing.

Pin assignment of the M12 plug connector

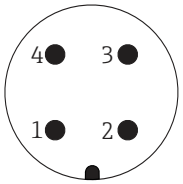

Pin	Meaning
1	Signal +
2	not connected
3	Signal -
4	Ground

Pin assignment of the 7/8" plug connector

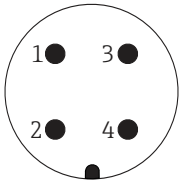

Pin	Meaning
1	Signal -
2	Signal +
3	Not connected
4	Screen

7.1.4 Supply voltage

PROFIBUS PA, FOUNDATION Fieldbus

"Power supply; Output" [1]	"Approval" [2]	Terminal voltage
E: 2-wire; FOUNDATION Fieldbus, switch output **G:** 2-wire; PROFIBUS PA, switch output	▪ Non-Ex ▪ Ex nA ▪ Ex nA(ia) ▪ Ex ic ▪ Ex ic(ia) ▪ Ex d(ia) / XP ▪ Ex ta / DIP ▪ CSA GP	9 to 32 V [3]
	▪ Ex ia / IS ▪ Ex ia + Ex d(ia) / IS + XP	9 to 30 V [3]

1) Feature 020 of the product structure
2) Feature 010 of the product structure
3) Input voltages up to 35 V will not spoil the device.

Polarity sensitive	No
FISCO/FNICO compliant according to IEC 60079-27	Yes

7.1.5 Overvoltage protection

If the measuring device is used for level measurement in flammable liquids which requires the use of overvoltage protection according to DIN EN 60079-14, standard for test procedures 60060-1 (10 kA, pulse 8/20 µs), an overvoltage protection module has to be installed.

Integrated overvoltage protection module

An integrated overvoltage protection module is available for 2-wire HART as well as PROFIBUS PA and FOUNDATION Fieldbus devices.

Product structure: Feature 610 "Accessory mounted", option NA "Overvoltage protection".

Technical data	
Resistance per channel	2 × 0.5 Ω max.
Threshold DC voltage	400 to 700 V
Threshold impulse voltage	< 800 V
Capacitance at 1 MHz	< 1.5 pF
Nominal arrest impulse voltage (8/20 µs)	10 kA

External overvoltage protection module

HAW562 or HAW569 from Endress+Hauser are suited as external overvoltage protection.

7.2 Connecting the measuring device

⚠ WARNING

Risk of explosion!

- Observe applicable national standards.
- Comply with the specifications in the Safety Instructions (XA).
- Use specified cable glands only.
- Check to ensure that the power supply matches the information on the nameplate.
- Switch off the power supply before connecting the device.
- Connect the potential matching line to the outer ground terminal before applying the power supply.

Required tools/accessories:

- For devices with a cover lock: Allen key AF3
- Wire stripper
- When using stranded cables: One ferrule for every wire to be connected.

7.2.1 Opening connection compartment cover

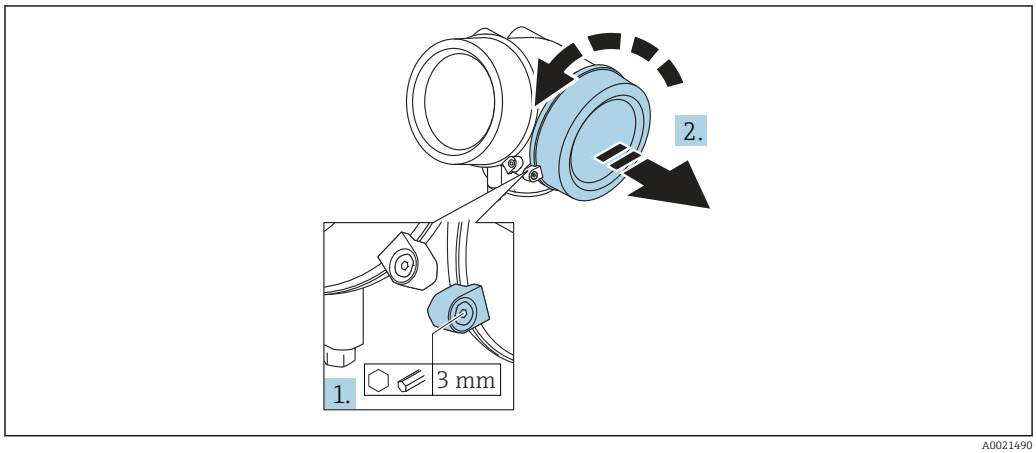

1. Loosen the screw of the securing clamp of the connection compartment cover using an Allen key (3 mm) and turn the clamp 90 ° clockwise.
2. Afterwards unscrew connection compartment cover and check lid gasket, replace if necessary.

7.2.2 Connecting

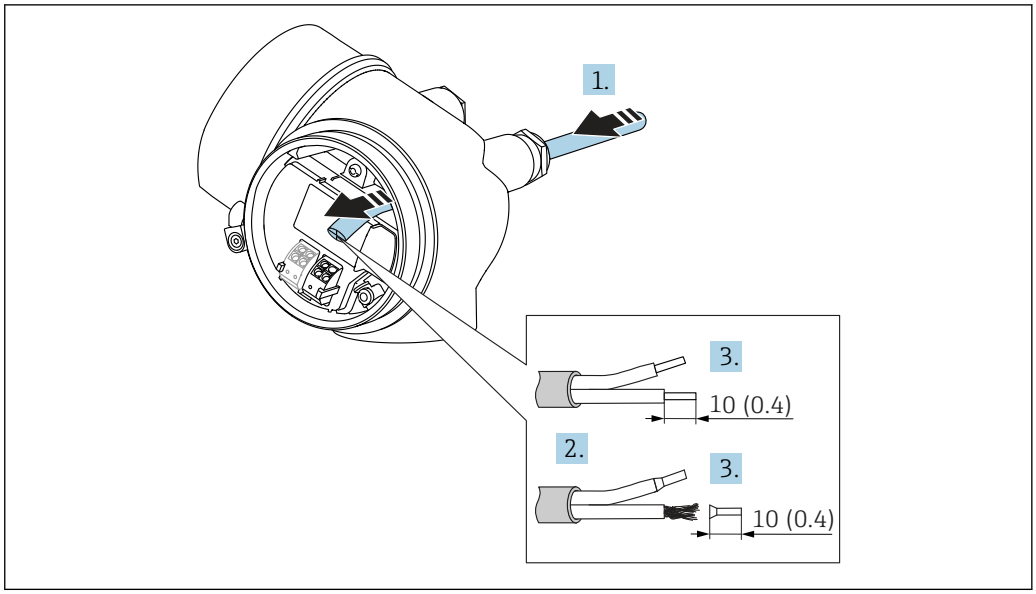

15 *Dimensions: mm (in)*

1. Push the cable through the cable entry . To ensure tight sealing, do not remove the sealing ring from the cable entry.
2. Remove the cable sheath.
3. Strip the cable ends over a length of 10 mm (0.4 in). In the case of stranded cables, also fit ferrules.
4. Firmly tighten the cable glands.
5. Connect the cable in accordance with the terminal assignment.

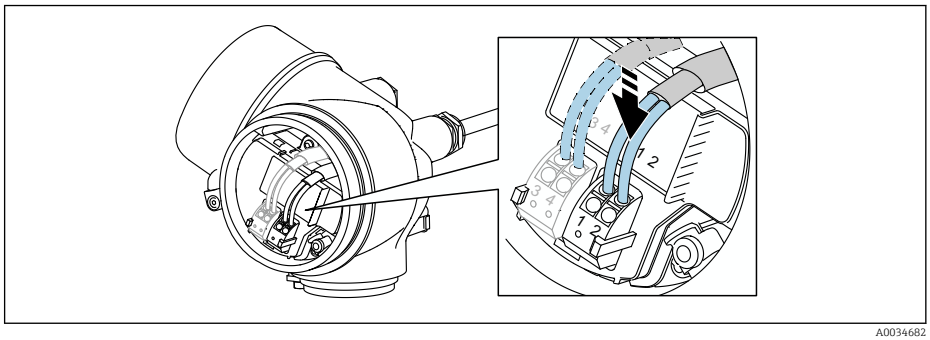

6. If using shielded cables: Connect the cable shield to the ground terminal.

7.2.3 Plug-in spring-force terminals

In the case of devices without integrated overvoltage protection, electrical connection is via plug-in spring-force terminals. Rigid conductors or flexible conductors with ferrules can be inserted directly into the terminal without using the lever, and create a contact automatically.

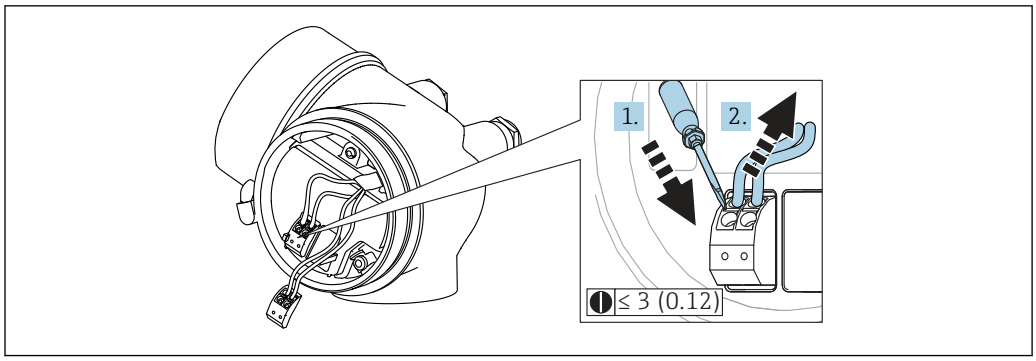

16 *Dimensions: mm (in)*

To remove cables from the terminal:

1. Using a flat-blade screwdriver ≤ 3 mm, press down on the slot between the two terminal holes
2. while simultaneously pulling the cable end out of the terminal.

7.2.4 Closing connection compartment cover

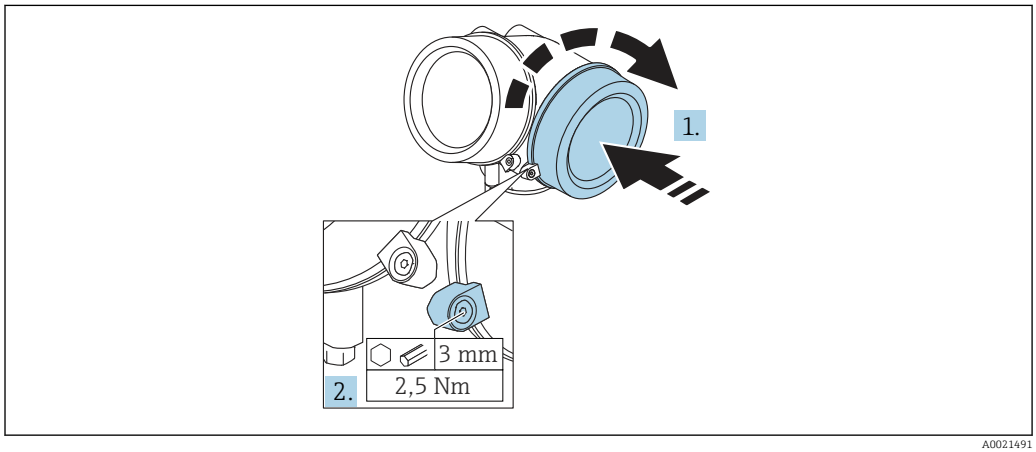

1. Screw back firmly connection compartment cover.
2. Turning securing clamp 90 ° counterclockwise and tighten the clamp with 2.5 Nm (1.84 lbf ft) again using the Allen key (3 mm).

7.3 Post-connection check

❑	Is the device or cable undamaged (visual check)?
❑	Do the cables comply with the requirements ?
❑	Do the cables have adequate strain relief?
❑	Are all cable glands installed, securely tightened and leak-tight?
❑	Does the supply voltage match the specifications on the nameplate?
❑	Is the terminal assignment correct?

❑	If required: Has protective ground connection been established ?
❑	If supply voltage is present, is the device ready for operation and do values appear on the display module?
❑	Are all housing covers installed and securely tightened?
❑	Is the securing clamp tightened correctly?

8 Operation options

8.1 Overview

8.1.1 Local operation

Operation with	*Pushbuttons*	*Touch Control*
Order code for "Display; Operation"	Option **C** "SD02"	Option **E** "SD03"
	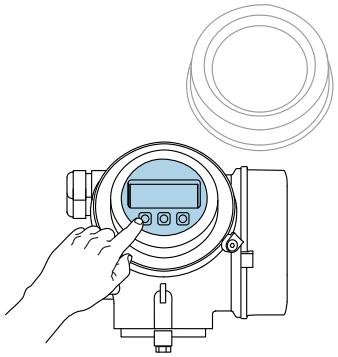 A0036312	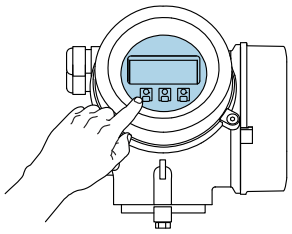 A0036313
Display elements	4-line display	4-line display white background lighting; switches to red in event of device error
	Format for displaying measured variables and status variables can be individually configured	
	Permitted ambient temperature for the display: –20 to +70 °C (–4 to +158 °F) The readability of the display may be impaired at temperatures outside the temperature range.	
Operating elements	local operation with 3 push buttons (⊞, ⊟, Ⓔ)	external operation via touch control; 3 optical keys: ⊞, ⊟, Ⓔ
	Operating elements also accessible in various hazardous areas	
Additional functionality	Data backup function The device configuration can be saved in the display module.	
	Data comparison function The device configuration saved in the display module can be compared to the current device configuration.	
	Data transfer function The transmitter configuration can be transmitted to another device using the display module.	

8.1.2 Operation with remote display and operating module FHX50

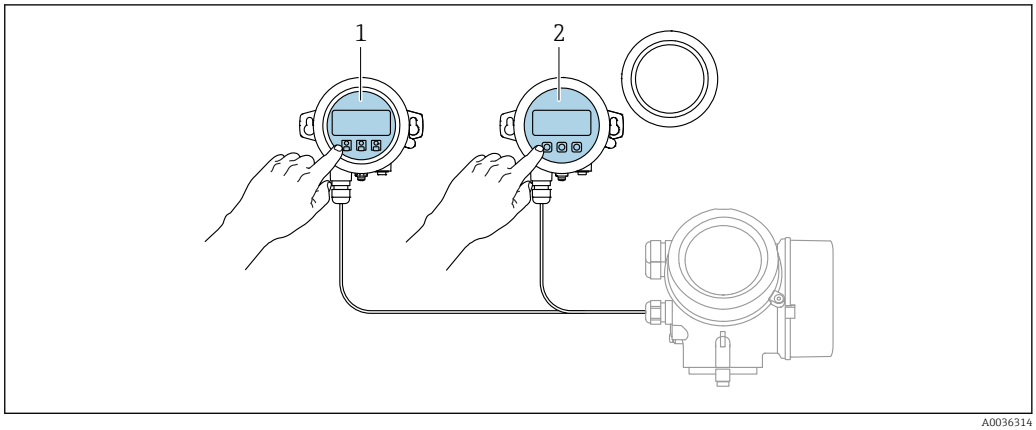

17 *FHX50 operating options*

1 *Display and operating module SD03, optical keys; can be operated through the glass of the cover*
2 *Display and operating module SD02, push buttons; cover must be removed*

8.1.3 Remote operation

Via FOUNDATION Fieldbus

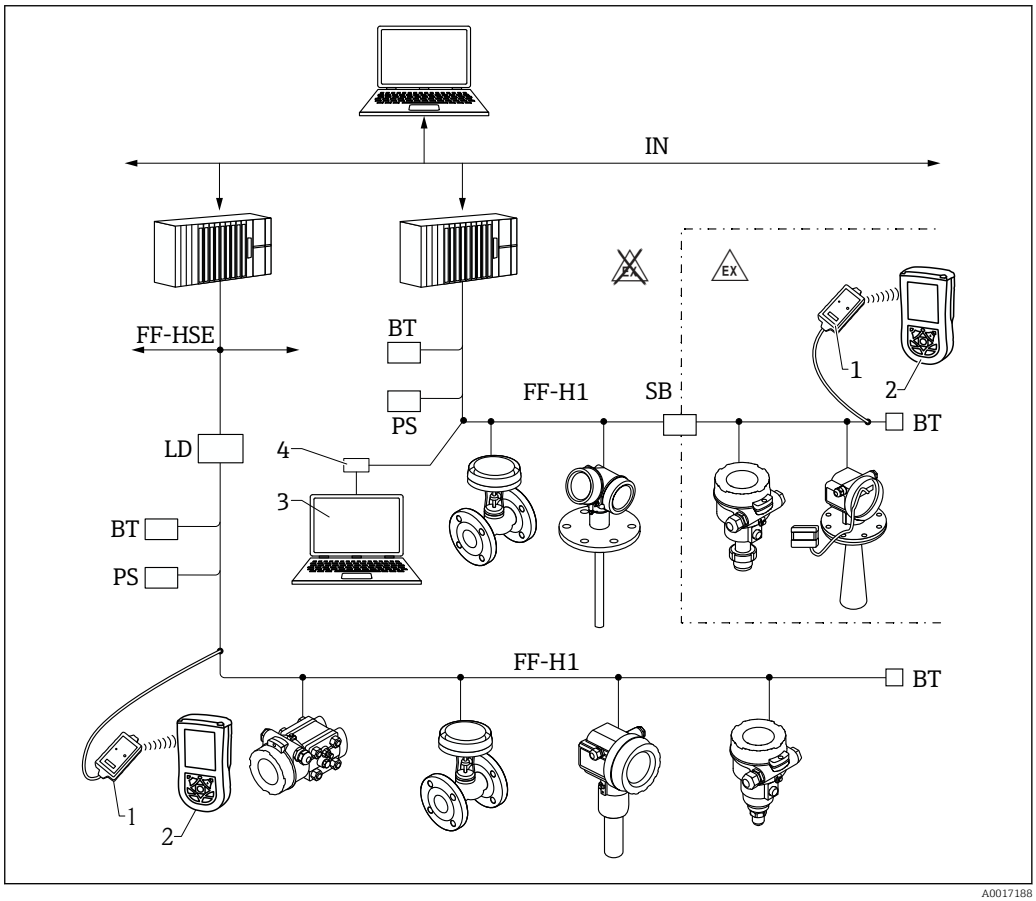

18 *FOUNDATION Fieldbus system architecture with associated components*

1 *FFblue Bluetooth modem*
2 *Field Xpert SFX350/SFX370*
3 *DeviceCare/FieldCare*
4 *NI-FF interface card*

IN	Industrial network
FF-HSE	High Speed Ethernet
FF-H1	FOUNDATION Fieldbus-H1
LD	Linking Device FF-HSE/FF-H1
PS	Bus Power Supply
SB	Safety Barrier
BT	Bus Terminator

DeviceCare/FieldCare via service interface (CDI)

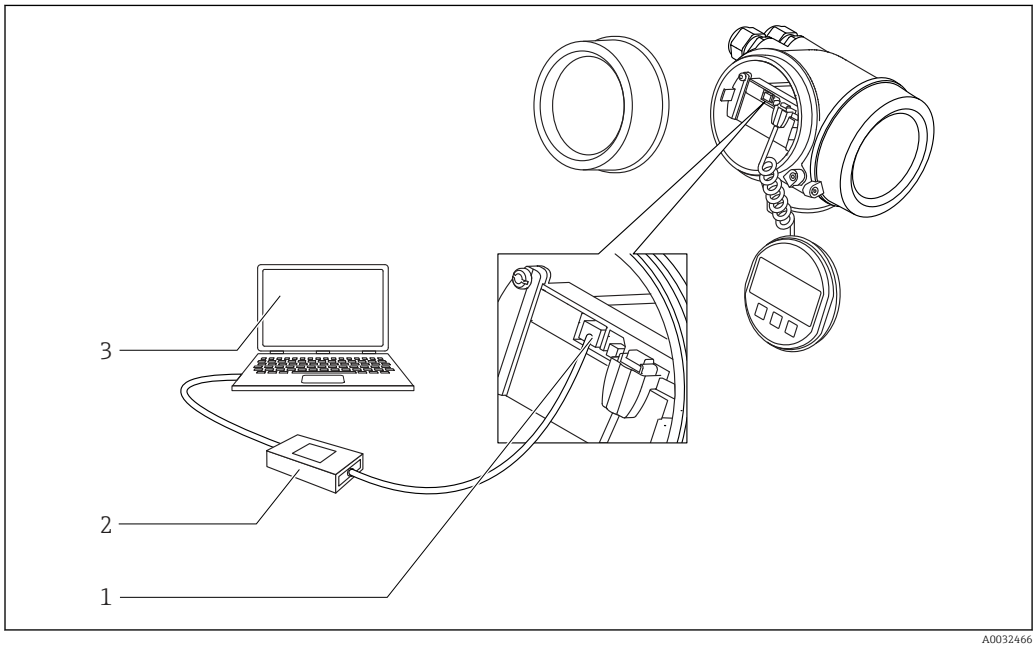

19 DeviceCare/FieldCare via service interface (CDI)

1 Service interface (CDI) of the instrument (= Endress+Hauser Common Data Interface)
2 Commubox FXA291
3 Computer with DeviceCare/FieldCare operating tool

8.2 Structure and function of the operating menu

8.2.1 Structure of the operating menu

Menu	Submenu / parameter	Meaning
	Language [1]	Defines the operating language of the on-site display
Commissioning [2]		Launches the interactive wizard for guided commissioning. Additional settings generally do not need to be made in the other menus when the wizard is finished.
Setup	Parameter 1 ... Parameter N	Once values have been set for these parameters, the measurement should generally be completely configured.
	Advanced setup	Contains additional submenus and parameters: ▪ to adapt the device to special measuring conditions. ▪ to process the measured value (scaling, linearization). ▪ to configure the signal output.
Diagnostics	**Diagnostic list**	Contains up to 5 currently active error messages.
	Event logbook [3]	Contains the last 20 messages (which are no longer active).
	Device information	Contains information for identifying the device.
	Measured values	Contains all current measured values.
	Data logging	Contains the history of the individual measuring values.
	Simulation	Is used to simulate measured values or output values.
	Device check	Contains all parameters needed to check the measurement capability of the device.
	Heartbeat [4]	Contains all the wizards for the **Heartbeat Verification** and **Heartbeat Monitoring** application packages.
Expert [5] Contains all parameters of the device (including those that are already in one of the other menus). This menu is organized according to the function blocks of the device. The parameters of the Expert menu are described in: GP01017F (FOUNDATION Fieldbus)	**System**	Contains all higher-order device parameters that do not concern the measurement or measured value communication.
	Sensor	Contains all parameters needed to configure the measurement.
	Output	Contains all parameters needed to configure the switch output (PFS).

Menu	Submenu / parameter	Meaning
	Communication	Contains all parameters needed to configure the digital communication interface.
	Diagnostics	Contains all parameters needed to detect and analyze operational errors.

1) If operating via operating tools (e.g. FieldCare), the "Language" parameter is located under "Setup → Advanced setup → Display"
2) Only if operating via an FDT/DTM system
3) only available with local operation
4) only available if operating via DeviceCare or FieldCare
5) On entering the "Expert" menu, an access code is always requested. If a customer specific access code has not been defined, "0000" has to be entered.

8.2.2 User roles and related access authorization

The two user roles **Operator** and **Maintenance** have different write access to the parameters if a device-specific access code has been defined. This protects the device configuration via the local display from unauthorized access → 51.

Access authorization to parameters

User role	Read access		Write access	
	Without access code (from the factory)	With access code	Without access code (from the factory)	With access code
Operator	✔	✔	✔	--
Maintenance	✔	✔	✔	✔

If an incorrect access code is entered, the user obtains the access rights of the **Operator** role.

The user role with which the user is currently logged on is indicated by the **Access status display** parameter (for display operation) or **Access status tooling** parameter (for tool operation).

8.2.3 Data access - Security

Write protection via access code

Using the device-specific access code, the parameters for the measuring device configuration are write-protected and their values can no longer be changed via local operation.

Define access code via local display

1. Navigate to: Setup → Advanced setup → Administration → Define access code → Define access code
2. Define a max. 4-digit numeric code as an access code.
3. Repeat the same code in **Confirm access code** parameter.
   ↳ The 🔒-symbol appears in front of all write-protected parameters.

Define access code via operating tool (e.g. FieldCare)

1. Navigate to: Setup → Advanced setup → Administration → Define access code
2. Define a max. 4-digit numeric code as an access code.
   ↳ Write protection is active.

Parameters that can always be changed

The write protection does not include certain parameters that do not affect the measurement. Despite the defined access code, they can always be modified, even if the other parameters are locked.

The device automatically locks the write-protected parameters again if a key is not pressed for 10 minutes in the navigation and editing view. The device locks the write-protected parameters automatically after 60 s if the user skips back to the measured value display mode from the navigation and editing view.

- If write access is activated via access code, it can be also be deactivated only via the access code → 52.
- In the "Description of Device Parameters" documents, each write-protected parameter is identified with the 🔒-symbol.

Disabling write protection via access code

If the 🔒-symbol appears on the local display in front of a parameter, the parameter is write-protected by a device-specific access code and its value cannot be changed at the moment using the local display → 🖹 51.

The locking of the write access via local operation can be disabled by entering the device-specific access code.

1. After you press Ⓔ, the input prompt for the access code appears.
2. Enter the access code.
   ↳ The 🔒-symbol in front of the parameters disappears; all previously write-protected parameters are now re-enabled.

Deactivation of the write protection via access code

Via local display

1. Navigate to: Setup → Advanced setup → Administration → Define access code → Define access code
2. Enter **0000**.
3. Repeat **0000** in **Confirm access code** parameter.
   ↳ The write protection is deactivated. Parameters can be changed without entering an access code.

Via an operating tool (e.g. FieldCare)

1. Navigate to: Setup → Advanced setup → Administration → Define access code
2. Enter **0000**.
   ↳ The write protection is deactivated. Parameters can be changed without entering an access code.

Write protection via write protection switch

Unlike parameter write protection via a user-specific access code, this allows write access to the entire operating menu - except for the **"Contrast display" parameter** - to be locked.

The parameter values are now read only and cannot be edited any more (exception **"Contrast display" parameter**):
- Via local display
- Via FOUNDATION Fieldbus

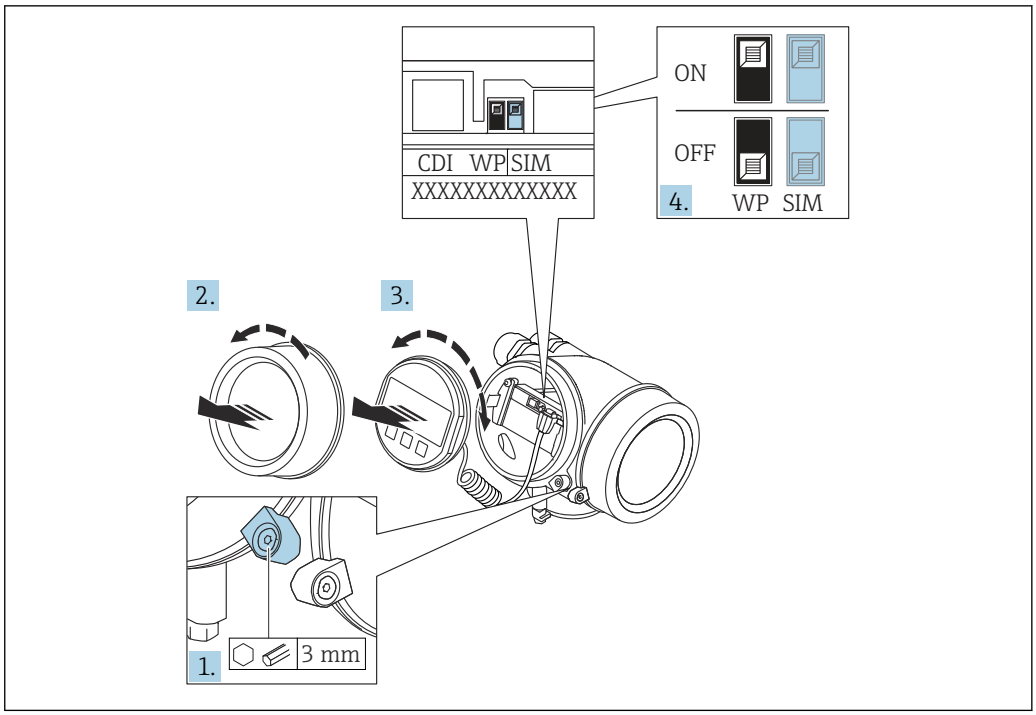

A0021474

1. Loosen the securing clamp.
2. Unscrew the electronics compartment cover.
3. Pull out the display module with a gentle rotational movement. To make it easier to access the lock switch, attach the display module to the edge of the electronics compartment.

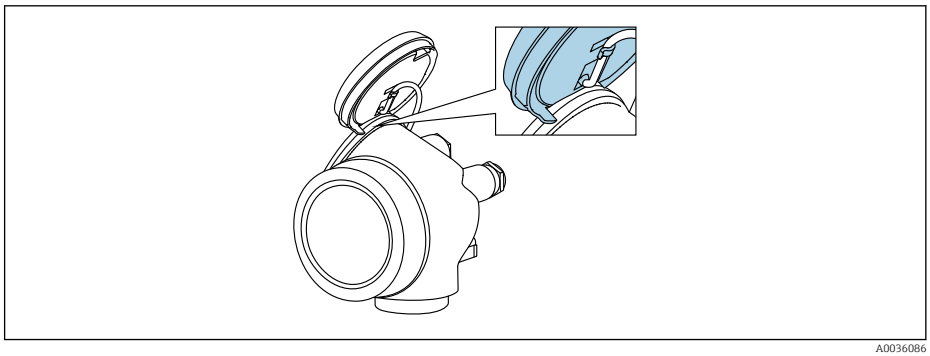

A0036086

4. Setting the write protection switch (WP) on the main electronics module to the **ON** position enables hardware write protection. Setting the write protection switch (WP) on the main electronics module to the **OFF** position (factory setting) disables hardware write protection.
   ↳ If the hardware write protection is enabled: The **Hardware locked** option is displayed in the **Locking status** parameter. In addition, on the local display the 🔒-symbol appears in front of the parameters in the header of the operational display and in the navigation view.

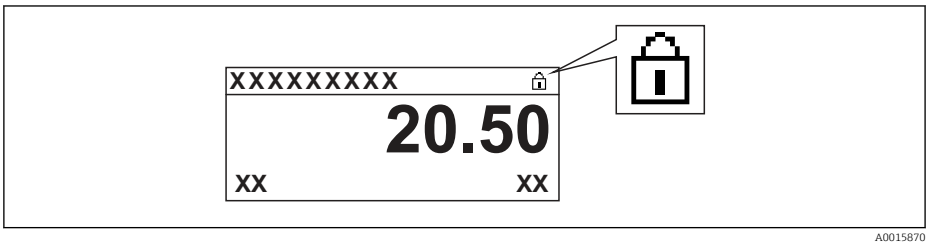

A0015870

   If the hardware write protection is disabled: No option is displayed in the **Locking status** parameter. On the local display, the 🔒-symbol disappears from in front of the parameters in the header of the operational display and in the navigation view.

5. Feed the cable into the gap between the housing and main electronics module and plug the display module into the electronics compartment in the desired direction until it engages.
6. Reverse the removal procedure to reassemble the transmitter.

Enabling and disabling the keypad lock

The keypad lock makes it possible to block access to the entire operating menu via local operation. As a result, it is no longer possible to navigate through the operating menu or change the values of individual parameters. Users can only read the measured values on the operational display.

The keypad lock is switched on and off via the context menu.

Switching on the keypad lock

For the SD03 display only
The keypad lock is switched on automatically:
- If the device has not been operated via the display for > 1 minute.
- Each time the device is restarted.

To activate the keylock manually:

1. The device is in the measured value display.
   Press E for at least 2 seconds.
   ↳ A context menu appears.
2. In the context menu select the **Keylock on** option.
   ↳ The keypad lock is switched on.

If the user attempts to access the operating menu while the keypad lock is active, the message **Keylock on** appears.

Switching off the keypad lock

1. The keypad lock is switched on.
   Press E for at least 2 seconds.
   ↳ A context menu appears.
2. In the context menu select the **Keylock off** option.
   ↳ The keypad lock is switched off.

Bluetooth® wireless technology

Signal transmission via Bluetooth® wireless technology uses a cryptographic technique tested by the Fraunhofer Institute
- The device is not visible via *Bluetooth*® wireless technology without the SmartBlue app
- Only one point-to-point connection between **one** sensor and **one** smartphone or tablet is established

8.3 Display and operating module

8.3.1 Display appearance

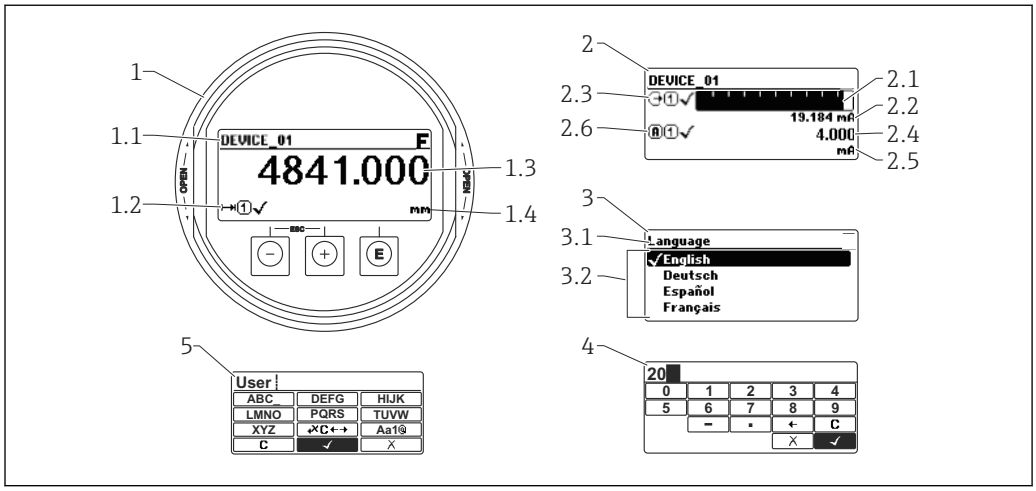

20 *Appearance of the display and operation module for on-site operation*

1 Measured value display (1 value max. size)
1.1 Header containing tag and error symbol (if an error is active)
1.2 Measured value symbols
1.3 Measured value
1.4 Unit
2 Measured value display (1 bargraph + 1 value)
2.1 Bargraph for measured value 1
2.2 Measured value 1 (including unit)
2.3 Measured value symbols for measured value 1
2.4 Measured value 2
2.5 Unit for measured value 2
2.6 Measured value symbols for measured value 2
3 Representation of a parameter (here: a parameter with selection list)
3.1 Header containing parameter name and error symbol (if an error is active)
3.2 Selection list; ☑ marks the current parameter value.
4 Input matrix for numbers
5 Input matrix for alphanumeric and special characters

Display symbols for the submenus

Symbol	Meaning
 A0018367	**Display/operation** Is displayed: ▪ in the main menu next to the selection "Display/operation" ▪ in the header, if you are in the "Display/operation" menu
 A0018364	**Setup** Is displayed: ▪ in the main menu next to the selection "Setup" ▪ in the header, if you are in the "Setup" menu
 A0018365	**Expert** Is displayed: ▪ in the main menu next to the selection "Expert" ▪ in the header, if you are in the "Expert" menu
 A0018366	**Diagnostics** Is displayed: ▪ in the main menu next to the selection "Diagnostics" ▪ in the header, if you are in the "Diagnostics" menu

Status signals

F A0032902	**"Failure"** A device error is present. The measured value is no longer valid.
C A0032903	**"Function check"** The device is in service mode (e.g. during a simulation).
S A0032904	**"Out of specification"** The device is operated: ▪ Outside of its technical specifications (e.g. during startup or a cleaning) ▪ Outside of the configuration carried out by the user (e.g. level outside configured span)
M A0032905	**"Maintenance required"** Maintenance is required. The measured value is still valid.

Display symbols for the locking state

Symbol	Meaning
 A0013148	**Display parameter** Marks display-only parameters which can not be edited.
 A0013150	**Device locked** ▪ In front of a parameter name: The device is locked via software and/or hardware. ▪ In the header of the measured value screen: The device is locked via hardware.

Measured value symbols

Symbol	Meaning
Measured values	
 A0032892	**Level**
 A0032893	**Distance**
 A0032908	**Current output**
 A0032894	**Measured current**
 A0032895	**Terminal voltage**
 A0032896	**Temperature of the electronics or the sensor**
Measuring channels	
 A0032897	**Measuring channel 1**
 A0032898	**Measuring channel 2**
Status of the measured value	
 A0018361	**Status "Alarm"** The measurment is interrupted. The output assumes the defined alarm value. A diagnostic message is generated.
 A0018360	**Status "Warning"** The device continues measuring. A diagnostic message is generated.

8.3.2 Operating elements

Key	Meaning
 A0018330	**Minus key** *For menu, submenu* Moves the selection bar upwards in a picklist. *For text and numeric editor* In the input mask, moves the selection bar to the left (backwards).
 A0018329	**Plus key** *For menu, submenu* Moves the selection bar downwards in a picklist. *For text and numeric editor* In the input mask, moves the selection bar to the right (forwards).
 A0018328	**Enter key** *For measured value display* ▪ Pressing the key briefly opens the operating menu. ▪ Pressing the key for 2 s opens the context menu. *For menu, submenu* ▪ Pressing the key briefly Opens the selected menu, submenu or parameter. ▪ Pressing the key for 2 s for parameter: If present, opens the help text for the function of the parameter. *For text and numeric editor* ▪ Pressing the key briefly – Opens the selected group. – Carries out the selected action. ▪ Pressing the key for 2 s confirms the edited parameter value.
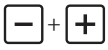 A0032909	**Escape key combination (press keys simultaneously)** *For menu, submenu* ▪ Pressing the key briefly – Exits the current menu level and takes you to the next higher level. – If help text is open, closes the help text of the parameter. ▪ Pressing the key for 2 s returns you to the measured value display ("home position"). *For text and numeric editor* Closes the text or numeric editor without applying changes.
 A0032910	**Minus/Enter key combination (press and hold down the keys simultaneously)** Reduces the contrast (brighter setting).
 A0032911	**Plus/Enter key combination (press and hold down the keys simultaneously)** Increases the contrast (darker setting).

8.3.3 Entering numbers and text

Numeric editor	Text editor
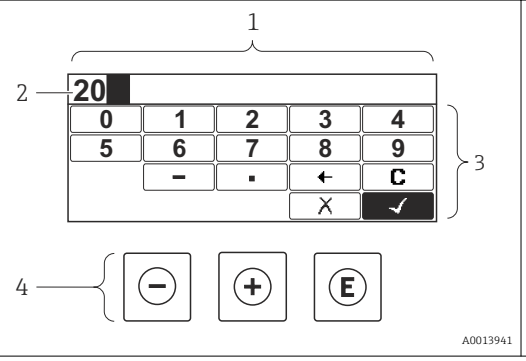	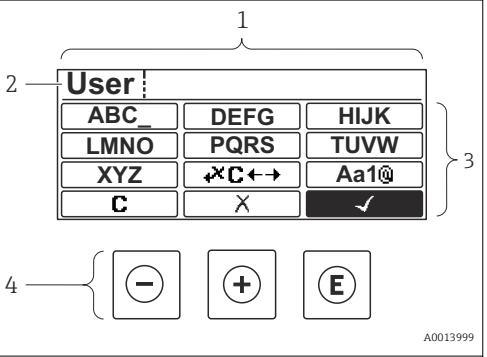

1 Editing view
2 Display area of the entered values
3 Input mask
4 Operating elements

Input mask

The following input symbols are available in the input mask of the numeric and text editor:

Numeric editor symbols

Symbol	Meaning
 A0013998	Selection of numbers from 0 to 9.
 A0016619	Inserts decimal separator at the input position.
 A0016620	Inserts minus sign at the input position.
 A0013985	Confirms selection.
 A0016621	Moves the input position one position to the left.
 A0013986	Exits the input without applying the changes.
 A0014040	Clears all entered characters.

Text editor symbols

Symbol	Meaning
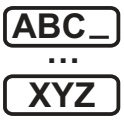 A0013997	Selection of letters from A to Z
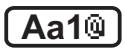 A0013981	Toggle ▪ Between upper-case and lower-case letters ▪ For entering numbers ▪ For entering special characters

 A0013985	Confirms selection.
 A0013987	Switches to the selection of the correction tools.
 A0013986	Exits the input without applying the changes.
 A0014040	Clears all entered characters.

Correction symbols under

Symbol	Meaning
 A0032907	Clears all entered characters.
 A0018324	Moves the input position one position to the right.
 A0018326	Moves the input position one position to the left.
 A0032906	Deletes one character immediately to the left of the input position.

8.3.4 Opening the context menu

Using the context menu, the user can call up the following menus quickly and directly from the operational display:

- Setup
- Conf. backup disp.
- Env.curve
- Keylock on

Opening and closing the context menu

The user is in the operational display.

1. Press E for 2 s.
   ↳ The context menu opens.

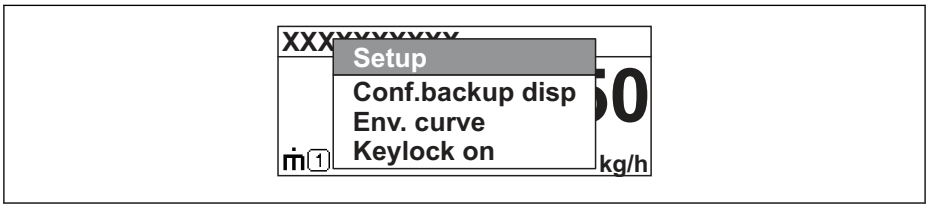

2. Press − + + simultaneously.
   ↳ The context menu is closed and the operational display appears.

Calling up the menu via the context menu

1. Open the context menu.
2. Press + to navigate to the desired menu.
3. Press E to confirm the selection.
   ↳ The selected menu opens.

8.3.5 Envelope curve on the display and operating module

In order to assess the measuring signal, the envelope curve and - if a mapping has been recorded - the mapping curve can be displayed:

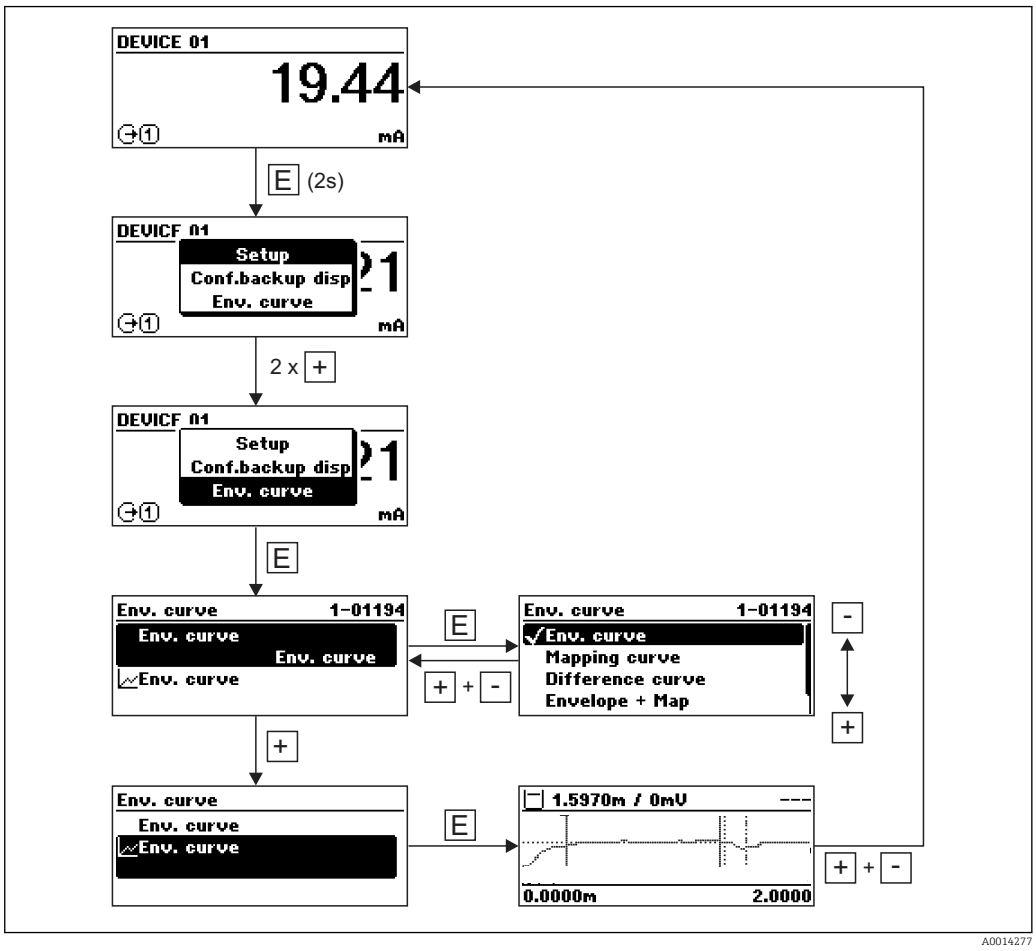

9 Integration into a FOUNDATION Fieldbus network

9.1 Device Description (DD)

You require the following to configure a device and integrate it into an FF network:
- An FF configuration program
- The Cff file (Common File Format: *.cff)
- The device description (DD) in one of the following formats
  - Device Description format 4 : *sym, *ffo
  - Device Description format 5 : *sy5, *ff5

Information on the device-specific DD

Manufacturer ID	0x452B48
Device Type	0x1028
Device Revision	0x01
DD Revision	Information and files at: ▪ www.endress.com ▪ www.fieldcommgroup.org
CFF Revision	

9.2 Integration into the FOUNDATION Fieldbus network

- For more in-depth information on integrating the device into the FF system, see the description for the configuration software used.
- When integrating the field devices into the FF system, make sure you are using the right files. You can read out the required version by means of the Device Revision/ DEV_REV and DD Revision/ DD_REV parameters in the Resource Block.

The device is integrated into the FF network as follows:

1. Start the FF configuration program.
2. Download the Cff and device description files (*.ffo, *.sym (for format 4) *ff5, *sy5 (for format 5) to the system.
3. Configure the interface.
4. Configure the device for the measuring task and for the FF system.

9.3 Device identification and addressing

FOUNDATION Fieldbus identifies the device using its ID code (Device ID) and automatically assigns it a suitable field address. The identity code cannot be changed. The device appears in the network display once you have started the FF configuration program and integrated the device into the network. The blocks available are displayed under the device name.

If the device description has not yet been loaded, the blocks report "Unknown" or "(UNK)".

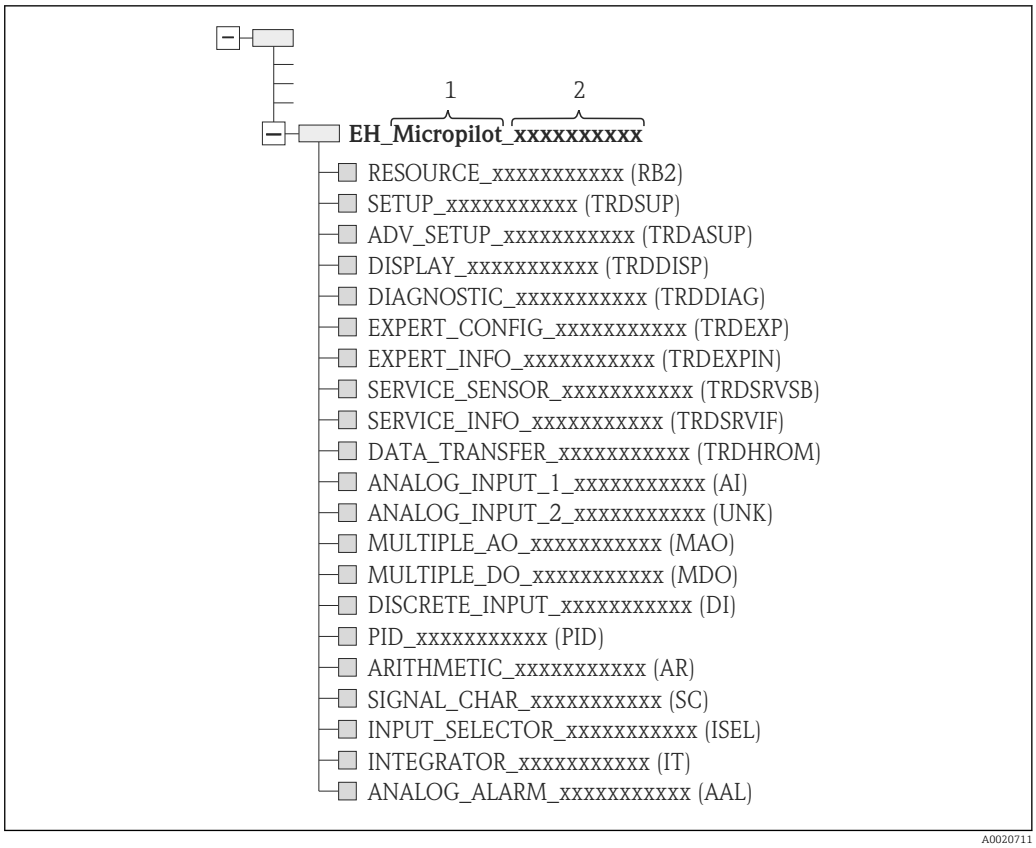

21 Typical display in a configuration program after the connection has been established

1 Device name
2 Serial number

9.4 Block model

9.4.1 Blocks of the device software

The device has the following blocks:
- Resource Block (device block)
- Transducer Blocks
  - Setup Transducer Block (TRDSUP)
  - Advanced Setup Transducer Block (TRDASUP)
  - Display Transducer Block (TRDDISP)
  - Diagnostic Transducer Block (TRDDIAG)
  - Advanced Diagnostic Transducer Block (TRDADVDIAG)
  - Expert Configuration Transducer Block (TRDEXP)
  - Expert Information Transducer Block (TRDEXPIN)
  - Service Sensor Transducer Block (TRDSRVSB)
  - Service Information Transducer Block (TRDSRVIF)
  - Data Transfer Transducer Block (TRDHROM)
- Function Blocks
  - 2 AI Blocks (AI)
  - 1 Discrete Input Block (DI)
  - 1 Multiple Analog Output Block (MAO)
  - 1 Mutliple Discrete Output Block (MDO)
  - 1 PID Block (PID)
  - 1 Arithmetic Block (AR)
  - 1 Signal Characterizer Block (SC)
  - 1 Input Selector Block (ISEL)
  - 1 Integrator Block (IT)
  - 1 Analog Alarm Block (AAL)

In addition to the pre-instantiated blocks already mentioned, the following blocks can also be instantiated:
- 3 AI Blocks (AI)
- 2 Discrete Input Blocks (DI)
- 1 PID Block (PID)
- 1 Arithemetic Block (AR)
- 1 Signal Characterizer Block (SC)
- 1 Input Selector Block (ISEL)
- 1 Integrator Block (IT)
- 1 Analog Alarm Block (AAL)

Up to 20 blocks can be instantiated in the device altogether, including the blocks already instantiated. For instantiating blocks, see the appropriate Operating Instructions of the configuration program used.

Endress+Hauser Guideline BA00062S.

The guideline provides an overview of the standard function blocks that are described in FOUNDATION Fieldbus Specifications FF 890 - 894. It is designed to help operators use the blocks implemented in the Endress+Hauser field devices.

9.4.2 Block configuration when device is delivered

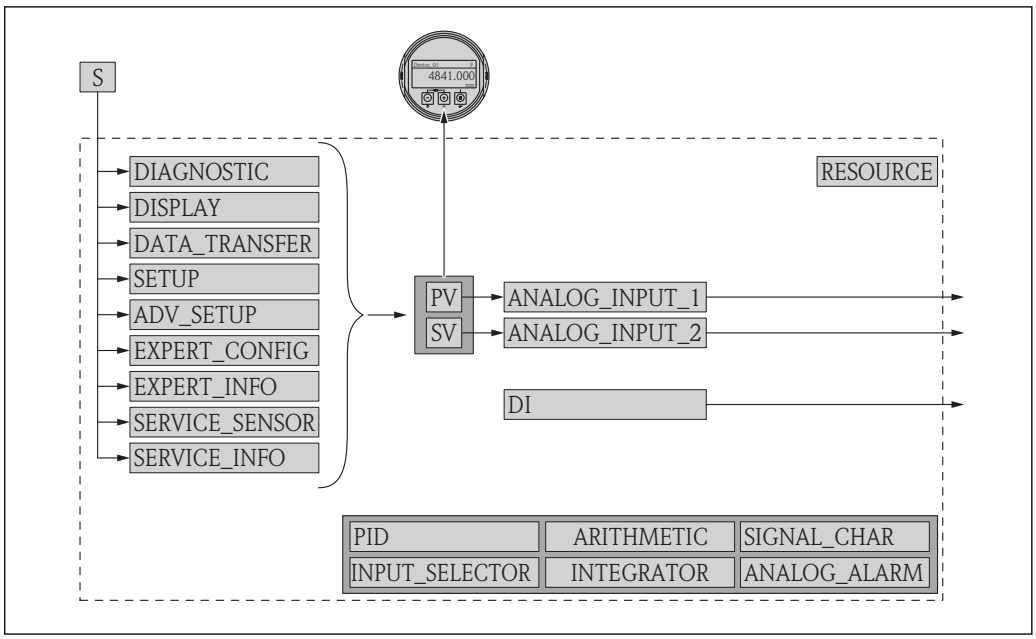

22 *Block configuration when device is delivered*

S Sensor
PV Primary value: Level linearized
SV Secondary value: Distance

9.5 Assignment of the measured values (CHANNEL) in an AI Block

The input value of an Analog Input Block is defined by the **CHANNEL** parameter.

Channel	Measured value
0	Uninitialized
211	Terminal voltage
773	Analog output advance diagnostics 1
774	Analog output advance diagnostics 2
32786	Absolute echo amplitude
32856	Distance
32885	Elektronic temperature
32949	Level linearized
33044	Relative echo amplitude

9.6 Index tables of Endress+Hauser parameters

The following tables list the manufacturer-specific device parameters for the Resource Blocks. For the FOUNDATION Fieldbus parameters, see the document BA062S "Guidline - FOUNDATION Fieldbus Function Blocks", which can be downloaded from www.endress.com.

9.6.1 Setup Transducer Block

Name	Label	Index	Data type	Size (Bytes)	Storage Class	Write access	MODE_BLK
operating_mode	Operating mode	15	ENUM16	2	Static	Maintenance	OOS
distance_unit	Distance unit	16	ENUM16	2	Static	Maintenance	OOS
tank_type	Tanktyp	17	ENUM16	2	Static	Maintenance	OOS
tube_diameter	Tube diameter	18	FLOAT	4	Static	Maintenance	OOS
bin_type	Bin type	19	ENUM16	2	Static	Maintenance	OOS
solid_filling_speed_range	Max. filling speed solid	20	ENUM16	2	Static	Maintenance	OOS
solid_draining_speed_range	Max. draining speed solid	21	ENUM16	2	Static	Maintenance	OOS
medium_group	Medium group	22	ENUM16	2	Static	Maintenance	OOS
empty_calibration	Empty calibration	23	FLOAT	4	Static	Maintenance	OOS
full_calibration	Full calibration	24	FLOAT	4	Static	Maintenance	OOS
level_unit_ro	Level unit	25	ENUM16	2	Static	Maintenance	OOS
PrimLevOut	Primary Value	26	Standard	5	Dynamic		
output_unit_after_linearization	Unit after linearization	27	ENUM16	2	Static	Maintenance	
filtered_distance	Distance	28	Standard	5	Dynamic		
signal_quality	Signalqualität	29	ENUM16	2	Dynamic		
confirm_distance	Confirm distance	30	ENUM16	2	Static	Maintenance	OOS
mapping_start_point	Mapping start point	31	FLOAT	4	Static	Maintenance	OOS
mapping_end_point	Mapping end point	32	FLOAT	4	Static	Maintenance	OOS
end_map_ampl	End map amplitude	33	FLOAT	4	Static	Maintenance	OOS
map_end_x	Present mapping	34	FLOAT	4	Dynamic		
map_end_y	Map end Y	35	FLOAT	4	Dynamic		
record_map	Record map	36	ENUM16	2	Static	Maintenance	OOS
prepare_recording_map	Prepare recording map	37	ENUM16	2	Static	Development	OOS
end_of_mapping	End of mapping	38	ENUM16	2	Static	Maintenance	OOS
empty_scale		39	FLOAT	4	Static	Maintenance	OOS
full_scale		40	FLOAT	4	Static	Maintenance	OOS
empty_distance	Tank/silo height	41	FLOAT	4	Static	Maintenance	OOS
sw_option_active_overview	Software option overview	42	BIT_ENUM32	4			
sensor_type_ro	Sensor type	43	ENUM16	2	Static	Service	OOS
medium_type	Medium type	44	ENUM16	2	Static	Service	OOS
decimal_places_menu	Decimal places menu	45	ENUM16	2	Static	Maintenance	AUTO
evaluation_mode_ro	Evaluation mode	46	ENUM16	2	Dynamic	Maintenance	OOS
access_status_tooling	Access status tooling	47	ENUM16	2	Dynamic		
locking_status	Locking status	48	BIT_ENUM16	2	Dynamic		

9.6.2 Advanced Setup Transducer Block

Name	Label	Index	Data type	Size (Bytes)	Storage Class	Write access	MODE_BLK
medium_type	Medium type	15	ENUM16	2	Static	Service	OOS
medium_property	Medium property	16	ENUM16	2	Static	Maintenance	OOS

Name	Label	Index	Data type	Size (Bytes)	Storage Class	Write access	MODE_BLK
calculated_dc_value_ee	Calculated DC value	17	FLOAT	4	Dynamic	Production	AUTO
liquid_filling_speed_range	Max. filling speed liquid	18	ENUM16	2	Static	Maintenance	OOS
liquid_draining_speed_range	Max. draining speed liquid	19	ENUM16	2	Static	Maintenance	OOS
advanced_process_conditions	Advanced process conditions	20	ENUM16	2	Static	Maintenance	OOS
level_unit	Level unit	21	ENUM16	2	Static	Maintenance	OOS
blocking_distance	Blocking distance	22	FLOAT	4	Static	Maintenance	OOS
level_correction	Level correction	23	FLOAT	4	Static	Maintenance	OOS
empry_distance	Tank/silo height	24	FLOAT	4	Static	Maintenance	OOS
linearization_type	Linearization type	25	ENUM16	2	Static	Maintenance	OOS
unit_after_linearization	Unit after linearization	26	ENUM16	2	Static	Maintenance	OOS
free_text	Free text	27	STRING		Static	Maintenance	AUTO
maximum_value	Maximum value	28	FLOAT	4	Static	Maintenance	OOS
level_linearized_ds	Level linearized	29	Standard	5	Dynamic		
diameter	Diameter	30	FLOAT	4	Static	Maintenance	OOS
intermediate_height	Intermediate height	31	FLOAT	4	Static	Maintenance	OOS
table_number	Table number	32	UINT8	1	Static	Maintenance	OOS
table_mode	Table mode	33	ENUM16	2	Static	Maintenance	OOS
activate_table	Tabelle aktivieren	34	ENUM16	2	Static	Maintenance	OOS
custom_table_sel_level	Level	67	FLOAT	4	Static	Maintenance	OOS
custom_table_sel_value	Customer value	68	FLOAT	4	Static	Maintenance	OOS
level_semiautomatic	Level	69	FLOAT	4	Dynamic		
output_echo_lost	Output echo lost	70	ENUM16	2	Static	Maintenance	OOS
value_echo_lost	Value echo lost	71	FLOAT	4	Static	Maintenance	OOS
ramp_at_echo_lost	Ramp at echo lost	72	FLOAT	4	Static	Maintenance	OOS
switch_output_function	Switch output function	73	ENUM16	2	Static	Maintenance	OOS
assign_status	Assign status	74	ENUM16	2	Static	Maintenance	OOS
assign_limit	Assign limit	75	ENUM16	2	Static	Maintenance	OOS
assign_diag_behavior	Assign diagnostic behavior	76	ENUM16	2	Static	Maintenance	OOS
switch_on_value	Switch-on value	77	FLOAT	4	Static	Maintenance	OOS
switch_on_delay	Switch-on delay	78	FLOAT	4	Static	Maintenance	OOS
switch_off_value	Switch-off value	79	FLOAT	4	Static	Maintenance	OOS
switch_off_delay	Switch-off delay	80	FLOAT	4	Static	Maintenance	OOS
switch_output_failure_mode	Failure mode	81	ENUM16	2	Static	Maintenance	OOS
switch_status	Switch status	82	ENUM16	2	Dynamic		
invert_output_signal	Invert output signal	83	ENUM16	2	Static	Maintenance	OOS

9.6.3 Display Transducer Block

Name	Label	Index	Data type	Size (Bytes)	Storage Class	Write access	MODE_BLK
locking_status_display	Locking status	15	ENUM16	2	Dynamic		
access_status_display	Access status display	16	ENUM16	2	Dynamic		

Name	Label	Index	Data type	Size (Bytes)	Storage Class	Write access	MODE_BLK
access_code_for_display	Enter access code	17	UINT16	2	Static	Operator	AUTO
define_access_code	Freigabecode definieren	18	UINT16	2	Static	Maintenance	AUTO
language	Language	19	ENUM16	2	Static	Operator	AUTO
foramt_display	Format display	20	ENUM16	2	Static	Operator	AUTO
value_1_display	Value 1 display	21	ENUM16	2	Static	Maintenance	AUTO
decimal_places_1	Decimal places 1	22	ENUM16	2	Static	Maintenance	AUTO
value_2_display	Value 2 display	23	ENUM16	2	Static	Maintenance	AUTO
decimal_places_2	Decimal places 2	24	ENUM16	2	Static	Maintenance	AUTO
value_3_display	Value 3 display	25	ENUM16	2	Static	Maintenance	AUTO
decimal_places_3	Decimal places 3	26	ENUM16	2	Static	Maintenance	AUTO
value_4_display	Value 4 display	27	ENUM16	2	Static	Maintenance	AUTO
decimal_places_4	Decimal places 4	28	ENUM16	2	Static	Maintenance	AUTO
display_interval	Display interval	29	FLOAT	4	Static	Operator	AUTO
display_damping	Display damping	30	FLOAT	4	Static	Maintenance	AUTO
header	Header	31	ENUM16	2	Static	Maintenance	AUTO
header_text	Header text	32	STRING	12	Static	Maintenance	AUTO
display_separator	Separator	33	ENUM16	2	Static	Maintenance	AUTO
number_format	Zahlenformat	34	ENUM16	2	Static	Maintenance	AUTO
decimal_places_menu	Decimal places menu	35	ENUM16	2	Static	Maintenance	AUTO
contrast_display	Contrast display	36	FLOAT	4	Static	Operator	AUTO
backlight	Backlight	37	ENUM16	2	Static	Operator	AUTO
operating_time	Operating time	38	STRING	14	Dynamic		
last_backup	Last backup	39	STRING	14	Static	Production	AUTO
configuration_management	Configuration management	40	ENUM16	2	Static	Maintenance	AUTO
comparison_result	Comparison result	41	ENUM16	2	Static	Production	AUTO

9.6.4 Diagnostic Transducer Block

Name	Label	Index	Data type	Size (Bytes)	Storage Class	Write access	MODE_BLK
actual diagnostics	Actual diagnostics	15	UINT32	4	Dynamic		
present_timestamp	Timestamp	16	STRING	14	Dynamic		
previous diagnostics	Letzte Diagnose	17	UINT32	4	Dynamic		
previous_timestamp	Timestamp	18	STRING	14	Dynamic		
operating_time_from_restart	Operating time from restart	19	STRING	14	Dynamic		
operating_time	Operating time	20	STRING	14	Dynamic		
diagnostics_1	Diagnostics 1	21	UINT32	4	Dynamic		
diag_1_timestamp	Timestamp	22	STRING	14	Dynamic		
diagnostics_2	Diagnostics 2	23	UINT32	4	Dynamic		
diag_2_timestamp	Timestamp	24	STRING	14	Dynamic		
diagnostics_3	Diagnostics 3	25	UINT32	4	Dynamic		
diag_3_timestamp	Timestamp	26	STRING	14	Dynamic		
diagnostics_4	Diagnostics 4	27	UINT32	4	Dynamic		

Name	Label	Index	Data type	Size (Bytes)	Storage Class	Write access	MODE_BLK
diag_4_timestamp	Timestamp	28	STRING	14	Dynamic		
diagnostics_5	Diagnostics 5	29	UINT32	4	Dynamic		
diag_5_timestamp	Timestamp	30	STRING	14	Dynamic		
filter_options	Filter options	31	ENUM8	1	Static	Maintenance	AUTO
clear_event_list	Clear event list	32	ENUM16	2	Static	Service	AUTO
simulation_distance_ro	Simulation distance	33	ENUM16	2	Static	Development	AUTO
value_of_simulated_distance	Vaue of simulated distance	34	FLOAT	4	Static	Maintenance	AUTO
assign_sim_meas	Assign measurement variable	35	ENUM16	4	Static	Maintenance	OOS
sim_value_process_variable	Value process variable	36	FLOAT	4	Static	Maintenance	OOS
switch_output_simulation	Switch output simulation	37	ENUM16	2	Static	Maintenance	OOS
sim_switch_status	Switch status	38	ENUM16	2	Static	Maintenance	AUTO
simulation_device_alarm	Simulation device alarm	39	ENUM16	2	Static	Maintenance	OOS
simulation_diagnostic_event	Simulation diagnostic event	40	UINT32	4	Static	Service	OOS
start_device_check	Start device check	41	ENUM16	2	Static	Maintenance	AUTO
result_device_check	Result device check	42	ENUM16	2	Static	Development	AUTO
last_check_time	Last check time	43	STRING	14	Dynamic		
level_signal	Level signal	44	ENUM16	2	Static	Development	AUTO
device_check_timestamp	Timestamp	45	UINT32	14	Static	Development	AUTO
assign_channel_1	Assign channel 1	54	ENUM16	2	Static	Maintenance	AUTO
assign_channel_2	Assign channel 2	55	ENUM16	2	Static	Maintenance	AUTO
assign_channel_3	Assign channel 3	56	ENUM16	2	Static	Maintenance	AUTO
assign_channel_4	Assign channel 4	57	ENUM16	2	Static	Maintenance	AUTO
logging_interval	Logging interval	58	FLOAT	4	Static	Maintenance	AUTO
clear_logging_data	Clear logging data	59	ENUM16	2	Static	Maintenance	AUTO
alarm_delay	Alarm delay	60	FLOAT	4	Static	Maintenance	AUTO

9.6.5 Expert Configuration Transducer Block

The parameters of the **Expert Configuration Transducer Block** are described in GP01017F: "Micropilot FMR5x - Description of Device Parameters - FOUNDATION Fieldbus"

Name	Label	Index	Data type	Size (Bytes)	Storage Class	Write access	MODE_BLK
locking status	Locking status	15	ENUM16	2			
access_status_tooling	Access status tooling	16	ENUM16	2			
enter_access_code	Enter access code	17	UINT16	2	Static	Operator	AUTO
distance_unit_ro	Distance unit	18	ENUM16	2	Static	Maintenance	OOS
operating_mode_ro	Operating mode	19	ENUM16	2	Static	Maintenance	OOS
free_field_special	Free field special	20	ENUM16	2	Static	Maintenance	OOS
sensor_type	Sensor type	21	ENUM16	2	Static	Service	OOS
distance_offset	Distance offset	22	FLOAT	4	Static	Maintenance	OOS
level_unit_ro	Level unit	23	ENUM16	2	Static	Maintenance	OOS

Name	Label	Index	Data type	Size (Bytes)	Storage Class	Write access	MODE_BLK
level_limit_mode	Level limit mode	24	ENUM16	2	Static	Maintenance	OOS
level_high_limit	High limit	25	FLOAT	4	Static	Maintenance	OOS
level_low_limit	Low limit	26	FLOAT	4	Static	Maintenance	OOS
output_mode	Output mode	27	ENUM16	2	Static	Maintenance	OOS
filter_dead_time	Dead time	28	FLOAT	4	Static	Maintenance	OOS
integration_time	Integration time	29	FLOT	4	Static	Maintenance	OOS
velocity_filter	Geschwindigkeitfilter	30	ENUM16	2	Static	Service	OOS
gpc_mode	GPC mode	31	ENUM16	2	Static	Maintenance	OOS
external_pressure_selector	External pressure selector	32	ENUM16	2	Static	Maintenance	OOS
gas_phase_compens_factor	Gas phase compensation factor	33	FLOAT	4	Static	Maintenance	OOS
reference_distance	Reference distance	34	FLOAT	4	Static	Maintenance	OOS
present_reference_distance	Present reference distance	35	FLOAT	4	Dynamic		
reference_echo_threshold	Reference echo threshold	36	FLOAT	4	Static	Maintenance	OOS
const_gpc_factor	Const. GPC factor	37	FLOAT	4	Static	Maintenance	OOS
external_pressure	External pressure	38	FLOAT	4	Static	Development	AUTO
start_self_check	Start self check	39	ENUM16	2	Static	Maintenance	AUTO
result_self_check	Result self check	40	ENUM16	2	Static	Development	AUTO
delay_time_echo_lost	Delay time echo lost	41	FLOAT	4	Static	Maintenance	OOS
safety_distance	Sicherheitsdistanz	42	FLOAT	4	Static	Maintenance	OOS
in_safety_distance	In safety distance	43	ENUM16	2	Static	Maintenance	OOS
acknowledge_alarm	Acknowledge alarm	44	ENUM16	2	Static	Maintenance	AUTO
evaluation_mode	Evaluation mode	45	ENUM16	2	Static	Maintenance	OOS
history_reset	History reset	46	ENUM16	2	Static	Maintenance	OOS
history_learning_control	History learning control	47	ENUM16	2	Static	Maintenance	OOS
history_learning	History learning	48	ENUM16	2	Static	Maintenance	OOS
level_external_input_1	Level external input 1	49	ENUM16	2	Static	Maintenance	OOS
function_input_1_level	Function input 1 level	50	ENUM16	2	Static	Maintenance	OOS
fixed_value_input_1	Fixed value input 1	51	FLOAT	4	Static	Maintenance	OOS
binary_input_1_level_control	Binary input 1 level control	52	ENUM16	2	Static	Maintenance	OOS
level_external_input_2	Level external input 2	53	ENUM16	2	Static	Maintenance	OOS
function_input_2_level	Function input 2 level	54	ENUM16	2	Static	Maintenance	OOS
fixed_value_input_2	Fixed value input 2	55	FLOAT	4	Static	Maintenance	OOS
binary_input_2_level_control	Binary input 2 level control	56	ENUM16	2	Static	Maintenance	OOS
control_measurement	Control measurement	57	ENUM16	2	Static	Maintenance	OOS
measurement_on	Measurement	58	ENUM16	2	Static	Maintenance	OOS
sensor_module	Sensor module	59	ENUM16	2	Static	Development	AUTO
sensor_module_ee	Sensor module	60	ENUM16	2	Static	Production	OOS
decimal_places_menu_ro	Decimal places menu	61	ENUM16	2	Static	Maintenance	AUTO
sw_option_active_overview	Software option active overview	62	BIT_ENUM32	4			
fieldbus_type	Feldbustyp	63	ENUM8	1			
medium_type_ro	Medium type	64	ENUM16	2	Static	Service	OOS

9.6.6 Expert Information Transducer Block

The parameters of the **Expert Information Transducer Block** are described in GP01017F: "Micropilot FMR5x - Description of Device Parameters - FOUNDATION Fieldbus"

Name	Label	Index	Data type	Size (Bytes)	Storage Class	Write access	MODE_BLK
abs_echo_ampl	Absolute echo amplitude	15	Standard	5			
rel_echo_ampl	Relative echo amplitude	16	Standard	5	Dynamic		
rel_eop_ampl	Tank bottom echo amplitude	17	Standard	5	Dynamic		
noise_signal_val	Noise of signal	18	FLOAT	4	Dynamic		
electronic_temperature	Electronic temperature	19	Standard	5	Dynamic		
found_echoes	Found echoes	20	ENUM16	2	Dynamic		
temperature_unit	Temperature unit	21	ENUM16	2	Static	Maintenance	OOS
max_electr_temp	Max. electronic temperature	22	FLOAT	4	Static	Development	AUTO
application_parameter	Application parameter	23	ENUM16	2	Dynamic		
time_max_electr_temp	Time max. electronics temperature	24	STRING	14	Dynamic		
measurement_frequency	Measurement frequency	25	FLOAT	4	Dynamic		
min_electr_temp	Min. electronics temperature	26	FLOAT	4	Static	Development	AUTO
time_min_electr_temp	Time min. electronics temperaturer	27	STRING	14	Dynamic		
reset_min_max_temp	Reset min/max. Temp.	28	ENUM16	2	Static	Service	AUTO
used_calculation	Used calculation	29	ENUM16	2	Dynamic		
tank_trace_state	Status Tanktrace	30	ENUM16	2	Dynamic		
max_draining_speed	Max. draining speed	31	FLOAT	4	Static	Development	AUTO
max_filling_speed	Max. filling speed	32	FLOAT	4	Static	Entwicklung	AUTO
time_max_level	Time max. level	33	STRING	14	Dynamic		
max_level_value	Max. level value	34	FLOAT	4	Static	Development	AUTO
time_min_level	Time min. level	35	STRING	14	Dynamic		
min_level_value	Min. level	36	FLOAT	4	Static	Development	AUTO
reset_min_max	Reset min./max.	37	ENUM16	2	Static	Service	AUTO
appl_param_changed_flags	Application parameter	38	UINT16	2	Static	Production	AUTO
terminal_voltage_ds	Terminal voltage	39	Standard	5	Dynamic		
area_of_incoupling	Area of incoupling	40	Standard	5	Dynamic		
linearization_type_ro	Linearization type	41	ENUM16	2	Static	Maintenance	OOS
operating_mode	Operating mode	42	ENUM16	2	Static	Maintenance	OOS
decimal_places_menu_ro	Decimal places menu	43	ENUM16	2	Static	Maintenance	AUTO
activat_sw_option	Activate SW option	44	UINT32	4	Static	Maintenance	AUTO
sw_option_active_overview	Sw option active overview	45	BIT_ENUM32	4	Dynamic		
debug_status		107	UINT8	1	Dynamic	x	AUTO

9.6.7 Service Sensor Transducer Block

The parameters of the **Service Sensor** Transducer Block can only be operated by authorized Endress+Hauser service personnel.

9.6.8 Service Information Transducer Block

The parameters of the **Service Information** Transducer Block can only be operated by authorized Endress+Hauser service personnel.

9.6.9 Advanced Diagnostics Transducer Block

The parameters of the **Advanced Diagnostics Transducer Block** are described in GP01017F: "Micropilot FMR5x - Description of Device Parameters - FOUNDATION Fieldbus"

Name	Label	Index	Data type	Size (Bytes)	Storage Class	Write access	MODE_BLK
assign_diag_signal_ad1	Assign diagnostic signal 1	15	ENUM16	2	Static	Maintenance	OOS
link_ad1_to	Link AD1 to	16	ENUM16	2	Static	Maintenance	OOS
linking_logic_ad1	Linking logic AD1	17	ENUM16	2	Static	Maintenance	OOS
sample_time_ad1	Sample time 1	18	UINT16	2	Static	Maintenance	OOS
calc_type_ad1	Calculation type 1	19	ENUM16	2	Static	Maintenance	OOS
check_mode_ad1	Check mode 1	20	ENUM16	2	Static	Maintenance	OOS
calculation_unit_ad1	Calculation unit 1	21	ENUM16	2	Static	Operator	OOS
upper_limit_ad1	Upper limit 1	22	FLOAT	4	Static	Maintenance	OOS
lower_limit_ad1	Lower limit 1	23	FLOAT	4	Static	Maintenance	OOS
hysteresis_ad1	Hysteresis 1	24	FLOAT	4	Static	Maintenance	OOS
max_value_ad1	Maximum value 1	25	FLOAT	4	Dynamic		
min_value_ad1	Minimum value 1	26	FLOAT	4	Dynamic		
reset_min_max_ad1	Reset min./max. 1	27	ENUM16	2	Static	Maintenance	AUTO
assign_status_sig_ad1	Assign status signal to AD event 1	28	ENUM16	2	Static	Maintenance	OOS
assign_event_behaviour_ad1	Assign event behaviourn 1	29	ENUM16	2	Static	Maintenance	OOS
alarm_delay_ad1	Alarm delay	30	FLOAT	4	Static	Maintenance	OOS
assign_diag_ signal_ad2	Assign diagnostic signal 2	31	ENUM16	2	Static	Maintenance	OOS
link_ad2_to	Link AD2 to	32	ENUM16	2	Static	Maintenance	OOS
linking_logic_ad2	Linking logic AD2	33	ENUM16	2	Static	Maintenance	OOS
sample_time_ad2	Sample time 2	34	UINT16	2	Static	Maintenance	OOS
calc_type_ad2	Calculation type 2	35	ENUM16	2	Static	Maintenance	OOS
check_mode_ad2	Check mode 2	36	ENUM16	2	Static	Maintenance	OOS
calculation_unit_ad2	Calculation unit 2	37	ENUM16	2	Static	Operator	OOS
upper_limit_ad2	Upper limit 2	38	FLOAT	4	Static	Maintenance	OOS
lower_limit_ad2	Lower limit 2	39	FLOAT	4	Static	Maintenance	OOS
hysteresis_ad2	Hysteresis 2	40	FLOAT	4	Static	Maintenance	OOS
max_value_ad2	Maximum value 2	41	FLOAT	4	Dynamic		
min_value_ad2	Minimum value 2	42	FLOAT	4	Dynamic		
reset_min_max_ad2	Reset min./max. 2	43	ENUM16	2	Static	Maintenance	AUTO
assign_status_sig_ad2	Assign status signal to AD event 2	44	ENUM16	2	Static	Maintenance	OOS
assign_event_behaviour_ad2	Assign event behaviour 2	45	ENUM16	2	Static	Maintenance	OOS
alarm_delay_ad2	Alarm delay 2	46	FLOAT	4	Static	Maintenance	OOS

9.7 Methods

The FOUNDATION Fieldbus Specification includes the use of methods to make device operation easier. A method is a sequence of interactive steps to be carried out in the specified order so as to configure certain device functions.

The following methods are available for the device:

- **Restart**
  This method is located in the Resource Block and directly prompts the setting of the **Device reset** parameter. This resets the device configuration to a defined state.
- **ENP Restart**
  This method is located in the Resource Block and directly prompts the setting of the parameters of the Electronic Name Plate (ENP).
- **Setup**
  This method is located in the SETUP Transducer Block and allows to set the most important parameters in this block for device configuration (measuring units, type of tank or vessel, type of medium, empty and full calibration).
- **Linearization**
  This method is located in the ADV_SETUP Transducer Block and allows to manage the linearization table by which the measured value is converted into volume, mass or flow.
- **Self Check**
  This method is located in the EXPERT_CONFIG Transducer Block and prompts the device self check parameters.

10 Commissioning via wizard

A wizard guiding the user through the initial setup is available in FieldCare and DeviceCare [5].

1. Connect the device to FieldCare or DeviceCare → 47.
2. Open the device in FieldCare or DeviceCare.
   ↳ The dashboard (home page) of the device appears:

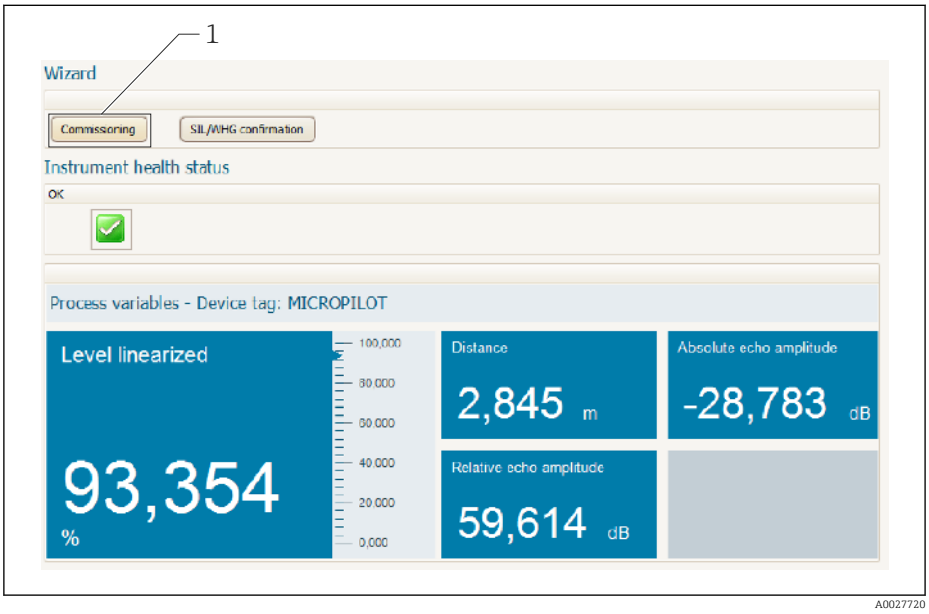

1 "Commissioning" button calls up the wizard.

3. Click on "Commissioning" to call up the wizard.
4. Enter or select the appropriate value for each parameter. These values are immediately written to the device.
5. Click "Next" to switch to the next page.
6. After finishing the last page, click "End of sequence" to close the wizard.

If the wizard is cancelled before all necessary parameters have been set, the device may be in an undefined state. A reset to the default settings is recommended in this case.

5) DeviceCare is available for download at www.software-products.endress.com. The download requires a registration in the Endress+Hauser software portal.

11 Commissioning via operating menu

11.1 Installation and function check

Make sure that all final checks have been completed before you start up your measuring point:

- Checklist "Post-installation check" → 36
- Checklist "Post-connection check" → 44

11.2 Setting the operating language

Factory setting: English or ordered local language

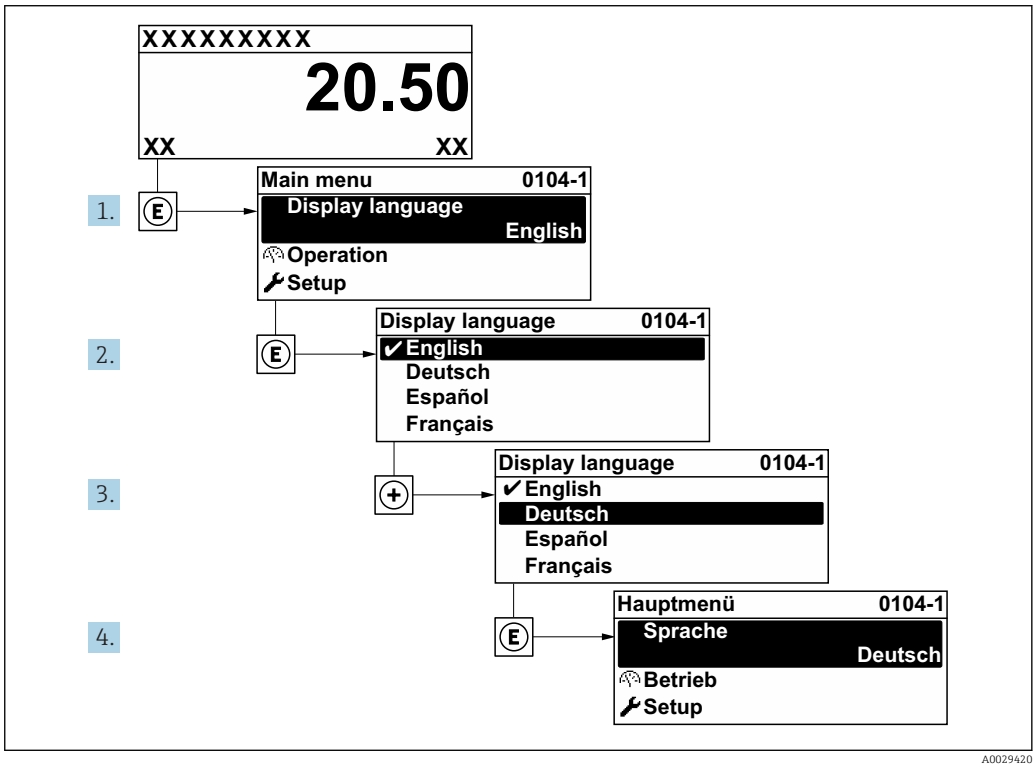

23 *Using the example of the local display*

11.3 Configuration of a level measurement

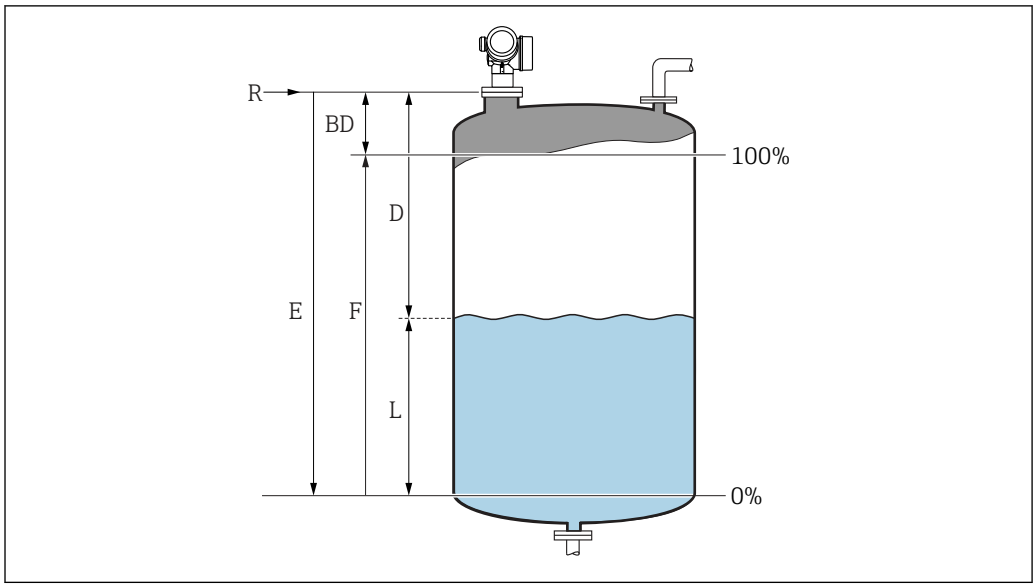

24 Configuration parameters for level measurements in liquids

R Reference point of the measurement
D Distance
L Level
E Empty calibration (= zero)
F Full calibration (= span)

1. Navigate to: Setup → Device tag
   ↳ Enter device tag.
2. Navigate to: Setup → Distance unit
   ↳ Select distance unit.
3. Navigate to: Setup → Tank type
   ↳ Select tank type.
4. For **Tank type** parameter = Bypass / pipe:
   Navigate to: Setup → Tube diameter
   ↳ Enter the diameter of the stilling well or bypass.
5. Navigate to: Setup → Medium group
   ↳ Specify medium group: (**Water based (DC >= 4)** or **Others**)
6. Navigate to: Setup → Empty calibration
   ↳ Enter empty distance E (Distance from reference point R to the 0% level) [6].
7. Navigate to: Setup → Full calibration
   ↳ Enter full distance F (Distance from the 0% to the 100% level).
8. Navigate to: Setup → Level
   ↳ Indicates the measrued level L.
9. Navigate to: Setup → Distance
   ↳ Indicates the measured distance from the reference point R to the level L.
10. Navigate to: Setup → Signal quality
    ↳ Indicates the quality of the evaluated level echo.

6) If, for example, the measuring range covers only an upper part of the tank (E << tank height), it is mandatory to enter the acutal tank height into the "Setup → Advanced Setup → Level → Tank/silo height" parameter.

11. When operating via local display:
    Navigate to: Setup → Mapping → Confirm distance
    ↳ Compare distance indicated on the display to real distance in order to start the recording of an interference echo map.
12. When operating via operating tool:
    Navigate to: Setup → Confirm distance
    ↳ Compare distance indicated on the display to real distance in order to start the recording of an interference echo map.
13. Navigate to: Setup → Advanced setup → Level → Level unit
    ↳ Select level unit: %, m, mm, ft, in (Factory setting: %)

The response time of the device is preset by the **Tank type** parameter (→ 130). More detailed settings are possible in the **Advanced setup** submenu.

11.4 Recording the reference curve

After the configuration of the measurement it is recommended to record the current envelope curve as a reference curve. The reference curve can be used later on in the process for diagnostic purposes. To record the reference curve use the **Save reference curve** parameter.

Navigation in the menu
Expert → Diagnostics → Envelope diagnostics → Save reference curve

Meaning of the options
- No
  No action
- Yes
  The current envelope curve is saved as reference curve.

In devices which have been delivered with software version 01.00.zz, this submenu is only visible for the "Service" user role.

The reference curve can only be displayed in the envelope curve diagram of FieldCare after it has been loaded from the device into FieldCare. This is performed by the "Load Reference Curve" function in FieldCare.

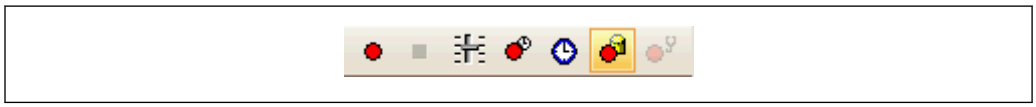

25 The "Load Reference Curve" function

11.5 Configuration of the on-site display

11.5.1 Factory settings of the on-site display

Parameter	Factory setting
Format display	1 value, max. size
Value 1 display	Level linearized
Value 2 display	None
Value 3 display	None
Value 4 display	None

11.5.2 Adjustment of the on-site display

The on-site display can be adjusted in the following submenu:
Setup → Advanced setup → Display

11.6 Configuration management

After commissioning, you can save the current device configuration, copy it to another measuring point or restore the previous device configuration. You can do so using the **Configuration management** parameter and its options.

Navigation path in the operating menu
Setup → Advanced setup → Configuration backup display → Configuration management

Meaning of the options
- **Cancel**
  No action is executed and the user exits the parameter.
- **Execute backup**
  A backup copy of the current device configuration in the HistoROM (built-in in the device) is saved to the display module of the device. The backup copy comprises the transmitter and sensor data of the device.
- **Restore**
  The last backup copy of the device configuration is copied from the display module to the HistoROM of the device. The backup copy comprises the transmitter and sensor data of the device.
- **Duplicate**
  The transmitter configuration is duplicated to another device using the transmitter display module. The following parameters, which characterize the individual measuring point are **not** included in the transmitted configuration:
  Medium type
- **Compare**
  The device configuration saved in the display module is compared to the current device configuration of the HistoROM. The result of this comparison is displayed in the **Comparison result** parameter.
- **Clear backup data**
  The backup copy of the device configuration is deleted from the display module of the device.

While this action is in progress, the configuration cannot be edited via the local display and a message on the processing status appears on the display.

If an existing backup is restored to a different device using the **Restore** option, it may occur that some device functionalities are no longer available. In some cases even a device reset → 176 will not restore the original status..

In order to transmit a configuration to a different device, the **Duplicate** option should always be used.

11.7 Protection of the settings against unauthorized changes

There are two ways to protect the settings against unauthorized changes:

- Via parameter settings (software locking) → 51
- Via locking switch (hardware locking) → 52

12 Commissioning (block-based operation)

12.1 Function check

Carry out a post-installation and a post-connection check as per the checklist before commissioning the device:

- "Post-installation check" checklist → 36
- "Post-connection check" checklist → 44

12.2 Block configuration

12.2.1 Preparatory steps

1. Switch on the device.
2. Note the DEVICE_ID → 64.
3. Open the FOUNDATION Fieldbus configuration program.
4. Load Cff and device description files into the host system or the configuration program. Make sure you are using the right system files.
5. Identify the device using the **DEVICE_ID** (see Point 2). Assign the desired tag name to the device by means of the **Pd-tag/FF_PD_TAG** parameter.

12.2.2 Configuring the Resource Block

1. Open the Resource Block.
2. If necessary, disable the lock for device operation.
3. If necessary, change the block name. Factory setting: RS-xxxxxxxxxxx (RB2)
4. If necessary, assign a description to the block by means of the **Tag Description/ TAG_DESC** parameter.
5. If necessary, change other parameters as per the requirements.

12.2.3 Configuring the Transducer Blocks

The measurement and the display module are configured using the Transducer Blocks. The general procedure is the same for all Transducer Blocks:

1. If necessary, change the block name.
2. Set the block mode to OOS by means of the **Block Mode/MODE_BLK** parameter, **TARGET** element.
3. Configure the level measurement → 87.
4. Set the block mode to **Auto** by means of the **Block Mode/MODE_BLK** parameter, **TARGET** element.

The block mode must be set to **Auto** for the measuring device to function correctly.

12.2.4 Configuring the Analog Input Blocks

The device has 2 permanently instanced Analog Input Blocks that can be assigned as required to the various process variables. If required, up to 5 Analog Input Blocks can be instanced through the FOUNDATION Fieldbus configuration tool.

Default settings	
Analog Input Block	**CHANNEL**
AI 1	32949: Level linearized
AI 2	32856: Distance

1. If necessary, change the block name.
2. Set the block mode to **OOS** by means of the **Block Mode/MODE_BLK** parameter, **TARGET** element.
3. Use the **Channel/CHANNEL** parameter to select the process variable which should be used as the input value for the Analog Input Block.
4. Use the **Transducer Scale/XD_SCALE** parameter to select the desired unit and the block input range for the process variable → 🖹 85. Make sure that the unit selected suits the process variable selected. If the process variable does not suit the unit, the **Block Error/BLOCK_ERR** parameter reports **Block Configuration Error** and the block mode cannot be set to **Auto**.
5. Use the **Linearization Type/L_TYPE** parameter to select the type of linearization for the input variable (factory setting: **Direct**). Make sure that the settings for the **Transducer Scale/XD_SCALE** and **Output Scale/ OUT_SCALE** parameters are the same for the **Direct** linearization type. If the values and units do not match, the **Block Error/BLOCK_ERR** parameter reports **Block Configuration Error** and the block mode cannot be set to **Auto**.
6. Enter the alarm and critical alarm messages by means of the **High High Limit/ HI_HI_LIM**, **High Limit/HI_LIM**, **Low Low Limit/LO_LO_LIM** and **Low Limit/ LO_LIM** parameters. The limit values entered must be within the value range specified for the **Output Scale/ OUT_SCALE** parameter → 🖹 85.
7. Specify the alarm priorities by means of the **High High Priority/HI_HI_PRI**, **High Priority/ HI_PRI**, **Low Low Priority/LO_LO_PRI** and **Low Priority/LO_PRI** parameters. Reporting to the field host system only takes place with alarms with a priority greater than 2.
8. Set the block mode to **Auto** using the **Block Mode/MODE_BLK** parameter, **TARGET** element. For this purpose, the Resource Block and the Setup Transducer Block must also be set to the **Auto** block mode.

12.2.5 Additional configuration

1. Link the function blocks and output blocks.
2. After specifying the active LAS, download all the data and parameters to the field device.

12.3 Scaling of the measured value in an AI Block

If the type of linearisation **L_TYPE** = **indirect** has been selected in an AI block, the measured value can be scaled within the block. The input range is defined by the **XD_SCALE** parameter through its **EU_0** and **EU_100** elements. This range is mapped linearly to the output ranged defined by the **OUT_SCALE** parameter through its **EU_0** and **EU_100** elements.

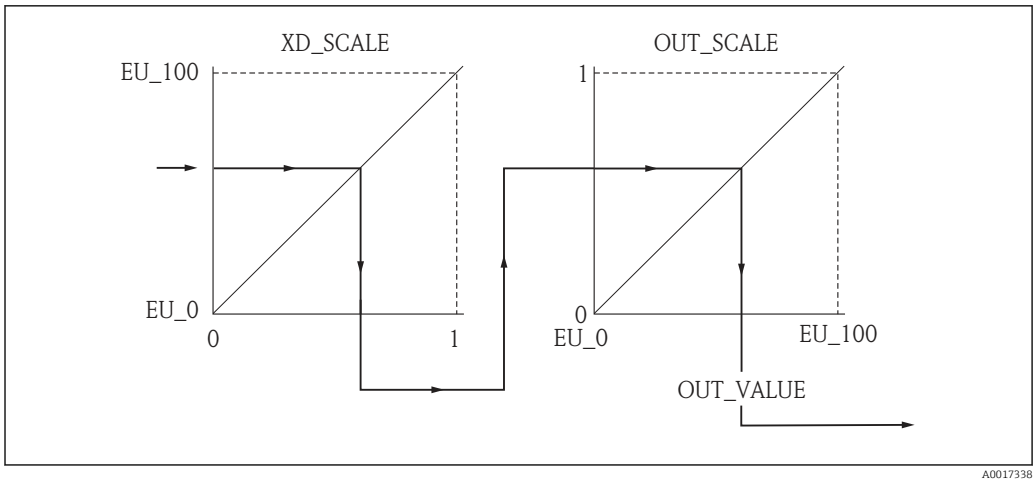

26 *Scaling of the measured value in an AI Block*

- If you have selected the **Direct** mode for the **L_TYPE** parameter, you cannot change the values and units for **XD_SCALE** and **OUT_SCALE**.
- The **L_TYPE**, **XD_SCALE** and **OUT_SCALE** parameters can only be changed in the OOS block mode.

12.4 Language selection

Step	Block	Parameter	Action
1	DISPLAY (TRDDISP)	Language (language)	Select language [1]. **Selection:** ▪ 1268: Swedish ▪ 32805: Arabian ▪ 32824: Chinese simplified ▪ 32842: Czech ▪ 32881: Dutch ▪ 32888: English ▪ 32917: French ▪ 32920: German ▪ 32945: Italian ▪ 32946: Japanese ▪ 32948: Korean ▪ 33026: Polish ▪ 33027: Portuguese ▪ 33062: Russian ▪ 33083: Spanish ▪ 33103: Thai ▪ 33120: Vietnamese ▪ 33155: Bahasa ▪ 33166: Turkish

1) When ordering a device the set of available languages is defined. Refer to the product structure, feature 500 "Additional Operation Language".

12.5 Configuration of a level measurement

The **Setup** method can also be used to configure the measurement. It is called up via the SETUP (TRDSUP) Transducer Block.

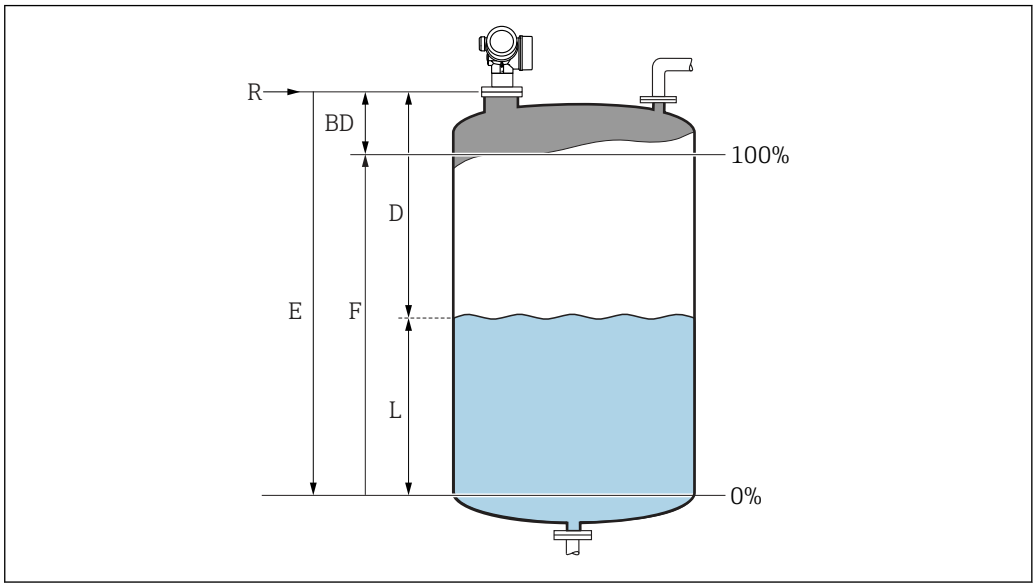

R = Reference point of the measurement *E = Empty calibration (= Zero point)*
D = Distance *F = Full calibration (= span)*
L = Level

Step	Block	Parameter	Action
1	SETUP (TRDSUP)	Distance unit (distance_unit)	Select distance unit. **Selection:** ▪ 1010: m ▪ 1013: mm ▪ 1018: ft ▪ 1019: in
2	SETUP (TRDSUP)	Tank type (tank_type)	Select tank type. **Selection:** ▪ 1271: Process vessel with agitator ▪ 1272: Process vessel standard ▪ 1273: Storage vessel ▪ 1274: Wave guide antenna ▪ 1279: Sphere ▪ 32816: Bypass / pipe ▪ 33013: Open channel ▪ 33094: Stilling well
3	SETUP (TRDSUP)	Tube diameter (tube_diameter) [1)]	Enter the diameter of the bypass or stilling well.
4	SETUP (TRDSUP)	Medium group (medium_group)	Select medium group. **Selection:** ▪ 316: water based (DC>4) ▪ 256: other (DC≥ 1.9)
5	SETUP (TRDSUP)	Empty calibration (empty_calibration)	Enter the distance E between the reference point R and the minimum level (0%).
6	SETUP (TRDSUP)	Full calibration (full_calibration)	Enter distance F between the minimum (0%) and maximum (100%) level.
7	SETUP (TRDSUP)	Level (level)	Displays the measured level L.

Step	Block	Parameter	Action
8	SETUP (TRDSUP)	Distance (filtered_dist_val)	Displays the distance D between the reference point R and the level L.
9	SETUP (TRDSUP)	Signal quality (signal_quality)	Displays the signal quality of the level echo.
10	SETUP (TRDSUP)	Confirm distance (confirm_distance)	Compare the displayed distance to the real distance in order to start the recording of the mapping curve. **Selection:** ▪ 179: Manual map ▪ 32847: Factory map ▪ 32859: Distance ok ▪ 32860: Distance too big ▪ 32861: Distance too small ▪ 32862: Distance unknown ▪ 33100: Tank empty

1) only available for "Tank type" = "Bypass/pipe"

12.6 Configuration of the on-site display

12.6.1 Factory settings of the on-site display for level measurements

Parameter	Factory setting
Format display	1 value, max. size
Value 1 display	Level linearized
Value 2 display	None
Value 3 display	None
Value 4 display	None

The on-site display can be adjusted in the **DISPLAY (TRDDISP)** transducer block.

12.7 Configuration management

After commissioning, you can save the current device configuration, copy it to another measuring point or restore the previous device configuration. You can do so using the **Configuration management** parameter and its options.

Navigation path in the operating menu
Setup → Advanced setup → Conf.backup disp → Config. managem.

Block operation
Block: **DISPLAY (TRDDISP)**
Parameter: **Configuration management (configuration_management)**

Functions of the parameter options

Options	Description
33097: Execute backup	A backup copy of the current device configuration in the HistoROM is saved to the display module of the device. The backup copy comprises the transmitter data of the device.
33057: Restore	The last backup copy of the device configuration is copied from the display module to the HistoROM of the device. The backup copy comprises the transmitter data of the device.

Options	Description
33838: Duplicate	The transmitter configuration from another device is duplicated to the device using the display module.
265: Compare	The device configuration saved in the display module is compared to the current device configuration of the HistoROM.
32848: Clear backup data	The backup copy of the device configuration is deleted from the display module of the device.

HistoROM
A HistoROM is a "non-volatile" device memory in the form of an EEPROM.

While this action is in progress, the configuration cannot be edited via the local display and a message on the processing status appears on the display.

12.8 Configuration of the event behavior according to the FOUNDATION Fieldbus specification FF912

The device complies with the FOUNDATION Fieldbus specification FF912. This has - among other things - the following consequences:

- The diagnsotic category according to NAMUR recommendation NE107 is transmitted via the fieldbus in a manufacturer-independent form:
  - F: Failure
  - C: Function check
  - S: Out of specification
  - M: Maintenance required
- The diagnostic category of pre-defined groups of events can be adjusted by the user according to the requirements of the specific application.
- Certain events can be separated from their group and can be handled individually:
  - 941: Echo lost
  - 942: In safety distance
  - 950: Advanced Diagnostic occurred
- Additional information and remedial measures are transmitted together with the event message via the fieldbus.

The diagnostic messages according to FF912 are available in the host only if the **Multi-bit support** option has been activated in the **FEATURE_SEL** parameter of the Resource block. For reasons of compatibility, this option is **not** activated on delivery:

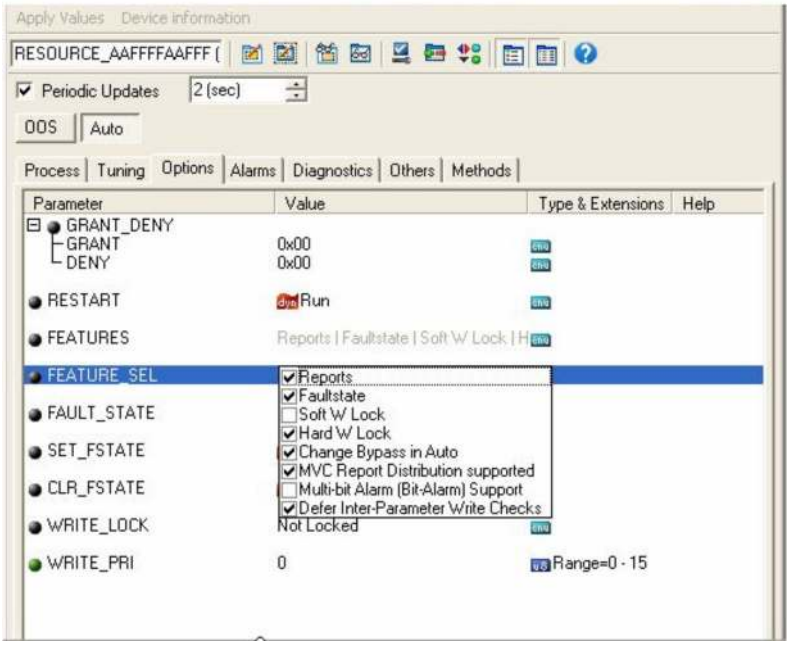

12.8.1 Groups of events

The diagnostic messages are classified into 16 groups according to the **source** and **severity** of the respective event. A **default diagnostic category** is allocated to each group. Each group is also represented by one bit of the allocation parameters.

Severity of the event	Default diagnostic category	Source of the event	Bit	Events within the group
Highest severity	Failure (F)	Sensor	31	▪ F003: Broken probe detected ▪ F046: Build-up detected ▪ F083: Memory content ▪ F104: HF cable ▪ F105: HF cable ▪ F106: Sensor
		Electronics	30	▪ F242: Software incompatible ▪ F252: Modules incompatible ▪ F261: Electronic modules ▪ F262: Module connecting ▪ F270: Main electronic failure ▪ F271: Main electronic failure ▪ F272: Main electronic failure ▪ F273: Main electronic failure ▪ F275: I/O-Modul failure ▪ F276: I/O module failure ▪ F282: Data storage ▪ F283: Memory content ▪ F311: Electronic Failure
		Configuration	29	▪ F410: Data transfer ▪ F435: Linearization ▪ F437: Configuration incompatible ▪ F482: Block in OOS
		Process	28	▪ F803: Current loop 1 ▪ F825: Current loop 1 ▪ F936: EMC interference ▪ F941: Echo lost [1)] ▪ F970: Linearization

1) This event can be removed from the group in order to define its behavior individually; see section "Configurable area".

Severity of the event	Default diagnostic category	Source of the event	Bit	Events within the group
High severity	Function check (C)	Sensor	27	not used in Micropilot
		Electronics	26	not used in Micropilot
		Configuration	25	▪ C411: Up-/download ▪ C484: Simulation failure mode ▪ C485: Simulation measured value ▪ C492: Simulation frequency output ▪ C493: Simulation pulse output ▪ C494: Switch output simulation ▪ C495: Simulation block output ▪ C585: Simulation distance ▪ C586: Record map
		Process	24	not used in Micropilot

Severity of the event	Default diagnostic category	Source of the event	Bit	Events within the group
Low severity	Out of specification (S)	Sensor	23	not used in Micropilot
		Electronics	22	not used in Micropilot

Severity of the event	Default diagnostic category	Source of the event	Bit	Events within the group
		Configuration	21	▪ S442: Frequency output ▪ S443: Pulse output
		Process	20	▪ S801: Energy too low ▪ S825: Operating temperature ▪ S921: Change of reference ▪ S942: In safety distance [1)] ▪ S943: In blocking distance ▪ S944: Level range ▪ S968: Level limited

1) This event can be removed from the group in order to define its behavior individually; see section "Configurable area".

Severity of the event	Default diagnostic category	Source of the event	Bit	Events within the group
Lowest severity	Maintenance required (M)	Sensor	19	not used in Micropilot
		Elektronics	18	▪ M272: Main electronics failure ▪ M311: Electronics failure
		Configuration	17	M438: Data set
		Process	16	M950: Advanced diagnostic occurred

12.8.2 Allocation parameters

The allocation of event categories to the event groups is controlled by the allocation parameters. They reside in the **RESOURCE (RB2)** block:

- **FD_FAIL_MAP**: for the **Failure (F)** event category
- **FD_CHECK_MAP**: for the **Function check (C)** event category
- **FD_OFFSPEC_MAP**: for the **Out of specification (S)** event category
- **FD_MAINT_MAP**: for the **Maintenance required (M)** event category

Each allocation parameter consists of 32 bits with the following meaning:

- **Bit 0:** reserved by the Fieldbus Foundation
- **Bits 1 to 15:** Configurable area; here, a number of predefined diagnostic events can be allocated irrespective of the group of events they belong to. In this case they are removed from their group and their bahavior can be configured individually. With Micropilot, the following parameters can be allocated to the configurable area:
  – 941: Echo lost
  – 942: In safety distance
  – 950: Advanced Diagnostic occurred
- **Bits 16 … 31:** Standard area; these bits are permanently allocated to a specific group of events. If a bit is set to **1**, the respective event category is assigned to the group.

The following table represents the default setting of the allocation parameters. In the default setting there is a unique relationship between the severity of the event and its category (i.e. its allocation parameter).

Default setting of the allocation parameters

	Standard area																**Configurable area**
Severity of the event	**Highest severity**				**High severity**				**Low severity**				**Lowest severity**				
Source of the event [1]	S	E	C	P	S	E	C	P	S	E	C	P	S	E	C	P	
Bit	31	30	29	28	27	26	25	24	23	22	21	20	19	18	17	16	15 … 1
FD_FAIL_MAP	1	1	1	1	0	0	0	0	0	0	0	0	0	0	0	0	0
FD_CHECK_MAP	0	0	0	0	1	1	1	1	0	0	0	0	0	0	0	0	0
FD_OFFSPEC_MAP	0	0	0	0	0	0	0	0	1	1	1	1	0	0	0	0	0
FD_MAINT_MAP	0	0	0	0	0	0	0	0	0	0	0	0	1	1	1	1	0

1) S: Sensor; E: Electronics; C: Configuration; P: Process

In order to change the diagnostic behavior of a group of events, proceed as follows:

1. Open the allocation parameter to which the group is currently allocated.
2. Switch the bit of the group from **1** to **0**. In the case of operation via FieldCare this is done by deactivating the respective checkbox (see the example below).
3. Open the allocation to which the group is to be allocated.
4. Switch the bit of the group from **0** to**1**. In the case of operation via FieldCare this is done by activating the respective checkbox (see the example below).

Example

The **Highest severity / Configuration** group contains the messages **410: Data transfer**, **411: Up-/Download**, **435: Linearization** and **437: Configuration incompatible**. These messages are no longer to be classified as **Failure (F)** but as **Funcktion check (C)**.

1.

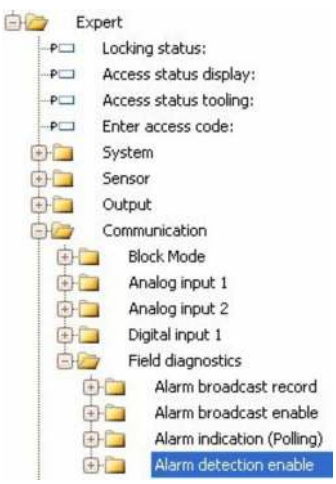

Use the FieldCare navigation window to navigate to the the following screen: **Expert → Communication → Field diagnostics → Alarm detection enable**.

2.

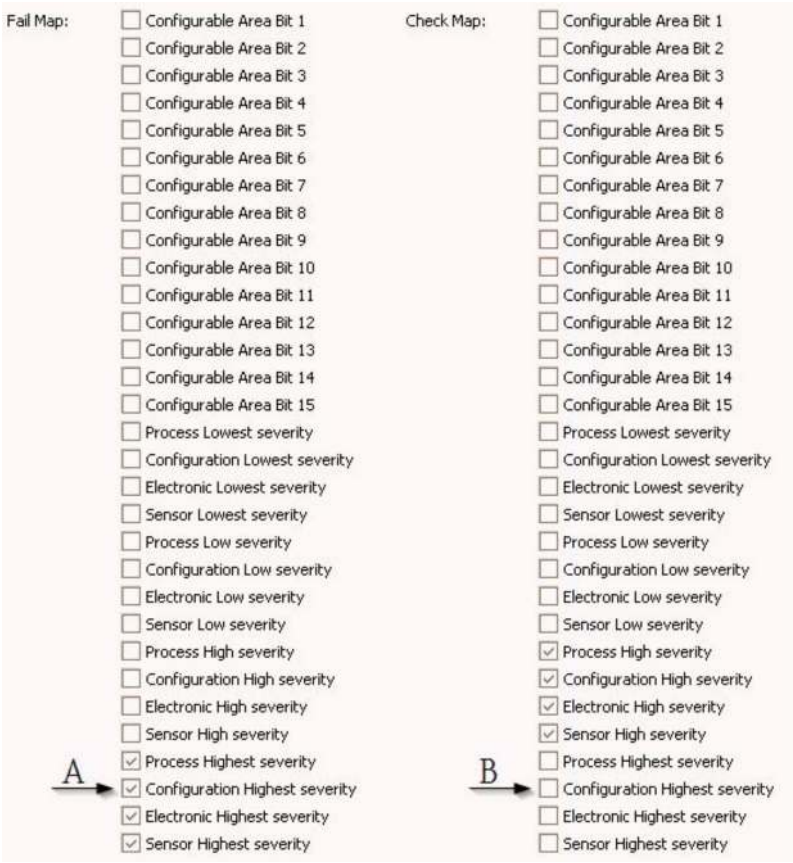

27 Default state of the "Fail Map" and "Check Map" columns

Look for the **Configuration Highest Severity** group in the **Fail Map** column and deactivate the associated checkbox (A). Activate the respective checkbox in the **Check Map** column (B). Remember to confirm each change by pressing the Enter key.



28 *Changed state of the "Fail Map" and "Check Map" columns*

Make sure that for each group the corresponding bit is set to **1** in at least one of the allocation parameters. Otherwise no event category is transmitted with the event message. As a consequence the message will not be recognized by the control system.

The **Alarm detection enable** screen is used to configure the detection of diagnostic events but not the transmission of event messages to the bus. The latter is configured on the **Alarm broadcast enable** screen, which is operated exactly in the same way as the **Alarm detection enable** screen. Status information is only transmitted to the bus if the Resource Block is in the **Auto** mode.

12.8.3 Configurable area

An event category can be individually defined for the following parameters - irrespective of the group of events they belong to by default.

- **F941**: Echo lost
- **S942:** In safety distance
- **M950:** Advanced Diagnostic occurred

Prior to changing the event category, the event must be allocated to one of the bits 1 to 15. This is performed by the parameters **FF912 ConfigArea_1** to **FF912ConfigArea_15** in the **DIAGNOSTIC (TRDDIAG)** block. Thereafter, the selected bit can be switched from **0** to **1** in the desired allocation parameter.

Example

To change the category of error **942 "In safety distance"** from **Out of specification (S)** (default), to **Function check (C)**, proceed as follows.

1. 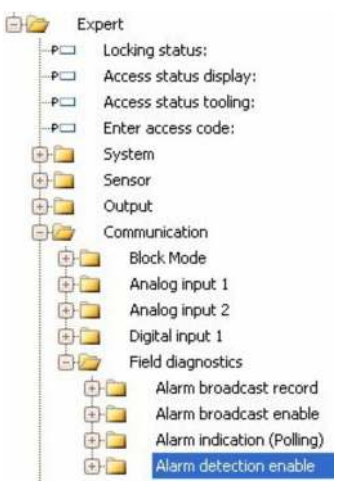

   Use the FieldCare navigation window to navigate to the the following screen: **Expert → Communication → Field diagnostics → Alarm detection enable**.

2. 

   By default all **Configurable Area Bits** are set to **not used**.

3. 

   Select one of these bits (in the example: Configurable Area Bit 1) and select **In safety distance** from the associated drop-down menu. Confirm the selection by pressing the Enter key.

4.

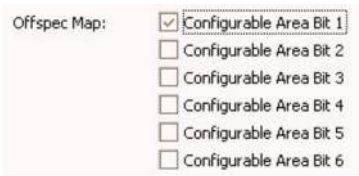

Got to the **Offspec Map** column and activate the checkbox of the respective bit (in the example: **Configurable Area Bit 1**). Confirm the selection by pressing the Enter key.

A change of the error category of **In safety distance** does not affect an error which is already present. The new category is only assigned if a new error of this type occurs after the change.

12.8.4 Transmission of the event meassages to the bus

Event priority

Event messages are only transmitted to the bus if their priority is between 2 and 15. Events of priority 1 are indicated on the display but not transmitted to the bus. Events of priority 0 are ignored. By default, the priority is 0 for all events. The priority can be adjusted individually for each allocation parameter. This is done by the following four priority parameters:

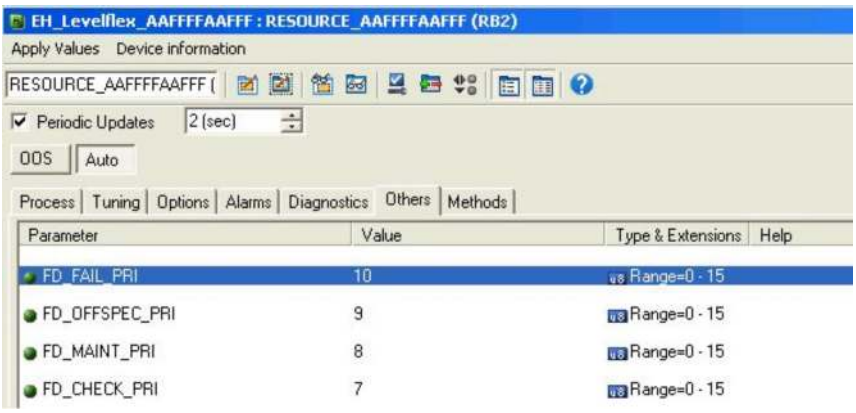

Suppression of individual events

For individual events, the transmission to the bus can suppressed by the use of a mask. The corresponding events will be displayed but not transmitted to the bus. In FieldCare, this mask can be found at **Expert → Communication → Field diagnostics → Alarm broadcast enable**. This mask functions as a negative mask, which means that, if a field is marked, the corresponding events will **not** be transmitted to the bus.

12.9 Protection of the settings against unauthorized changes

There are two ways to protect the settings against unauthorized changes:

- Via locking switch (hardware locking) → 52
- Via operating menu (software locking) → 51
- Via block operation:
  - Block: **DISPLAY (TRDDISP)**; parameter: **Define access code (define_access_code)**
  - Block: **EXPERT_CONFIG (TRDEXP)**; parameter: **Enter access code (enter_access_code)**

13 Diagnostics and troubleshooting

13.1 General trouble shooting

13.1.1 General errors

Error	Possible cause	Remedial action
Device does not respond.	Supply voltage not connected.	Connect the correct voltage.
	The cables do not contact the terminals properly.	Ensure electrical contact between the cable and the terminal.
Values on the display invisible	Contrast setting is too weak or too strong.	▪ Increase contrast by pressing ⊞ and Ⓔ simultaneously. ▪ Decrease contrast by pressing ⊟ and Ⓔsimultaneously.
	The plug of the display cable is not connected correctly.	Connect the plut correctly.
	Display is defective.	Replace display.
"Communication error" is indicated on the display when starting the device or connecting the display	Electromagnetic interference	Check grounding of the device.
	Broken display cable or display plug.	Exchange display.
Duplicating of the parameters from one device to another via the display doesn't work. Only the "Save" and "Abort" options are available.	Display with backup is not recognized if no data backup has been performed at the device before.	Connect display (with the backup) and restart the device.
CDI communication does not work.	Wrong setting of the COM port on the computer.	Check the setting of the COM port on the computer and change it if necessary.
Device measures incorrectly.	Parametrization error	Check and adjust parameterization.

13.1.2 Parametrization errors

Error	Possible cause	Remdy
Measured value incorrect	If measured distance (Setup → Distance) matches the real distance: Calibration error	▪ Check and adjust **Empty calibration** parameter (→ 🖹 131) if necessary. ▪ Check and adjust **Full calibration** parameter (→ 🖹 132) if necessary. ▪ Check and adjust linearization if necessary (**Linearization** submenu (→ 🖹 149)).
	For measurements in bypasses / stilling well: ▪ Wrong tank type ▪ Wrong tube diameter	▪ Select **Tank type (→ 🖹 130)** = **Bypass / pipe**. ▪ Enter correct diamter in **Tube diameter** parameter (→ 🖹 131).
	Wrong level correction	Enter correct value in **Level correction** parameter (→ 🖹 146).
	If measured distance (Setup → Distance) does not match the real distance: Interference echo	Carry out tank mapping (**Confirm distance** parameter (→ 🖹 134)).

Error	Possible cause	Remdy
No change of measured value on filling / emptying	Interference echo from installations, nozzle or build-up on the antenna.	▪ Carry out tank mapping (**Confirm distance** parameter (→ 🖹 134)). ▪ If necessary, clean antenna ▪ If necessary, selet better mopunting position
If the surface is not calm (e.g. filling, emptying, agitator running), the measured value jumps sporadically to a higher level	Signal is weakened by the rough surface - the interference echoes are sometimes stronger.	▪ Carry out tank mapping (**Confirm distance** parameter (→ 🖹 134)). ▪ Select **Tank type (→ 🖹 130)** = **Process vessel with agitator**. ▪ Increase integration time (Expert → Sensor → Distance → Integration time) ▪ Optimize orientation of the antenna ▪ If necessary, select a better mounting position and/or larger antenna.
During filling/emptying the measxured value jumps downwards	Multiple echoes	▪ Check **Tank type** parameter (→ 🖹 130). ▪ If possible, do not select central installation position. ▪ If appropriate, use a stilling well.
Error message F941 or S941 "Echo lost"	Level echo is too weak.	▪ Check **Medium group** parameter (→ 🖹 131). ▪ If necessary, select a more detailed setting in **Medium property** parameter (→ 🖹 142). ▪ Optimize alignment of antenna ▪ If necessary, select a better installation position and/or larger antenna.
	Level echo suppressed.	Delete mapping and record it again.
Device displays a level when the tank is empty.	Interference echo	Carry out mapping over entire measuring range when the tank is empty (**Confirm distance** parameter (→ 🖹 134)).
Wrong slope of the level in the entire measuring range	Wrong tank type selected.	Set **Tank type** parameter (→ 🖹 130) correctly.

13.2 Diagnostic information on local display

13.2.1 Diagnostic message

Faults detected by the self-monitoring system of the measuring device are displayed as a diagnostic message in alternation with the measured value display.

Measured value display in alarm condition	Diagnostic message

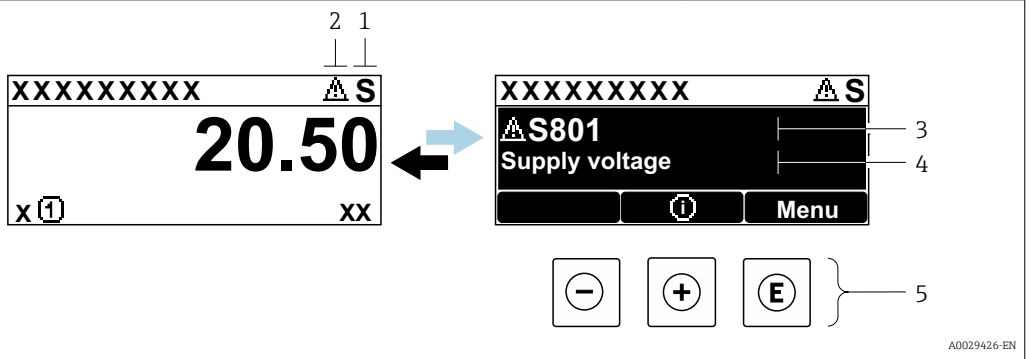

1 *Status signal*
2 *Status symbol (symbol for event level))*
3 *Status symbol with diagnostics event*
4 *Event text*
5 *Operating elements*

Status signals

F A0032902	**"Failure (F)" option** A device error is present. The measured value is no longer valid.
C A0032903	**"Function check (C)" option** The device is in service mode (e.g. during a simulation).
S A0032904	**"Out of specification (S)" option** The device is operated: ▪ Outside of its technical specifications (e.g. during startup or a cleaning) ▪ Outside of the configuration carried out by the user (e.g. level outside configured span)
M A0032905	**"Maintenance required (M)" option** Maintenance is required. The measured value is still valid.

Status symbol (symbol for event level)

⊗	**"Alarm" status** The measurement is interrupted. The signal outputs take on the defined alarm condition. A diagnostic message is generated.
⚠	**"Warning" status** The device continues to measure. A diagnostic message is generated.

Diagnostics event and event text

The fault can be identified using the diagnostics event. The event text helps you by providing information about the fault. In addition, the corresponding symbol is displayed before the diagnostics event.

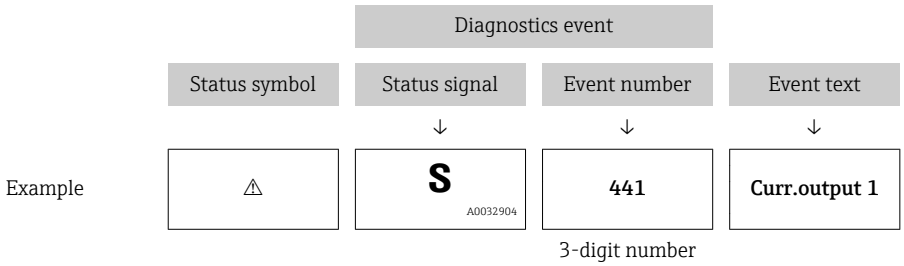

If two or more diagnostic messages are pending simultaneously, only the message with the highest priority is shown. Additional pending diagnostic messages can be shown in the **Diagnostic list** submenu.

Past diagnostic messages that are no longer pending are shown as follows:
- On the local display:
  in the **Event logbook** submenu
- In FieldCare:
  via the "Event List /HistoROM" function.

Operating elements

Operating functions in menu, submenu	
⊞	**Plus key** Opens the message about the remedial measures.
Ⓔ	**Enter key** Opens the operating menu.

13.2.2 Calling up remedial measures

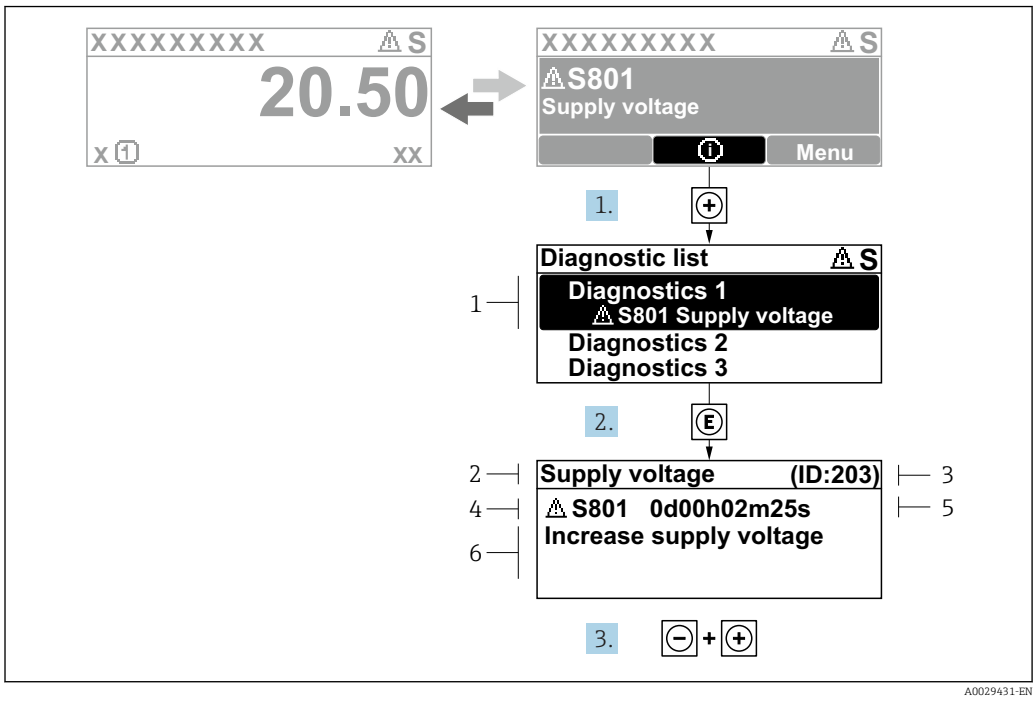

29 *Message for remedial measures*

1 *Diagnostic information*
2 *Short text*
3 *Service ID*
4 *Diagnostic behavior with diagnostic code*
5 *Operation time of occurrence*
6 *Remedial measures*

The user is in the diagnostic message.

1. Press ⊞ (ⓘ-Symbol).
   ↳ **Diagnostic list** submenu opens.
2. Select the desired diagnostic event with ⊞ or ⊟ and press Ⓔ.
   ↳ The message for the remedial measures for the selected diagnostic event opens.
3. Press ⊟ + ⊞ simultaneously.
   ↳ The message for the remedial measures closes.

The user is in the **Diagnostics** menu at an entry for a diagnostics event, e.g. in **Diagnostic list** submenu or in **Previous diagnostics**.

1. Press Ⓔ.
   ↳ The message for the remedial measures for the selected diagnostic event opens.
2. Press ⊟ + ⊞ simultaneously.
   ↳ The message for the remedial measures closes.

13.3 Diagnostic event in the operating tool

If a diagnostic event is present in the device, the status signal appears in the top left status in the operating tool along with the corresponding symbol for event level in accordance with NAMUR NE 107:

- Failure (F)
- Function check (C)
- Out of specification (S)
- Maintenance required (M)

A: Via the operating menu

1. Navigate to the **Diagnostics** menu.
   ↳ In the **Actual diagnostics** parameter, the diagnostic event is shown with event text.
2. On the right in the display range, hover the cursor over the **Actual diagnostics** parameter.
   ↳



A tool tip with remedial measures for the diagnostic event appears.

B: Via the "Create documentation" function

1.

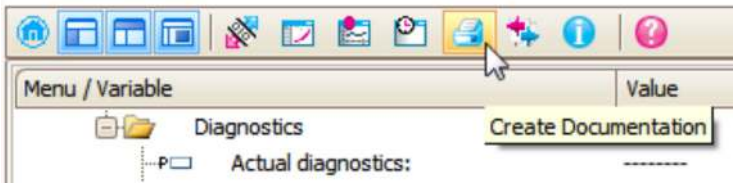

Select the "Create documentation" function.

2.

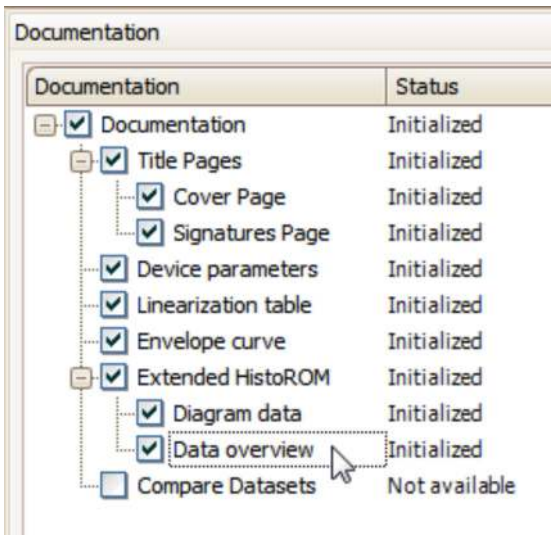

Make sure "Data overview" is marked.

3. Click "Save as ..." and save a PDF of the protocol.
   ↳ The protocol contains the diagnostic messages and remedy information.

C: Via the "Eventlist / Extended HistoROM" function

1. 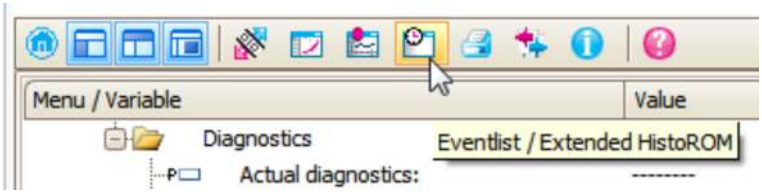

   Select the "Eventlist / Extended HistoROM" function.

2. 

   Select the "Load Eventlist" function.
   ↳ The list of events, including remedy information, is shown in the "Data overview" window.

13.4 Diagnostic messages in the DIAGNOSTIC Transducer Block (TRDDIAG)

- The **Actual diagnostics** parameter displays the message with the highest priority. Every message is also output as per the FOUNDATION Fieldbus Specification by means of the **XD_ERROR** and **BLOCK_ERROR** parameters.
- A list of diagnostic messages is displayed in the **Diagnostics 1** to **Diagnostics 5** parameters. If more than 5 messages are currently active, only those with the highest priority are displayed.
- You can view a list of alarms which are no longer active (event log) via the **Previous diagnostics** parameter.

13.5 Diagnostic list

In the **Diagnostic list** submenu submenu, up to 5 currently pending diagnostic messages can be displayed. If more than 5 messages are pending, the messages with the highest priority are shown on the display.

Navigation path
Diagnostics → Diagnostic list

Calling up and closing the remedial measures

1. Press E.
   ↳ The message for the remedial measures for the selected diagnostic event opens.
2. Press − + + simultaneously.
   ↳ The message about the remedial measures closes.

13.6 Overview of diagnostic events

Diagnostic number	Short text	Remedy instructions	Status signal [from the factory]	Diagnostic behavior [from the factory]
Diagnostic of electronic				
242	Software incompatible	1. Check software 2. Flash or change main electronics module	F	Alarm
252	Modules incompatible	1. Check electronic modules 2. Change I/O or main electronic module	F	Alarm
261	Electronic modules	1. Restart device 2. Check electronic modules 3. Change I/O Modul or main electronics	F	Alarm
262	Module connection	1. Check module connections 2. Change electronic modules	F	Alarm
270	Main electronic failure	Change main electronic module	F	Alarm
271	Main electronic failure	1. Restart device 2. Change main electronic module	F	Alarm
272	Main electronic failure	1. Restart device 2. Contact service	F	Alarm
273	Main electronic failure	1. Emergency operation via display 2. Change main electronics	F	Alarm
275	I/O module failure	Change I/O module	F	Alarm
276	I/O module failure	1. Restart device 2. Change I/O module	F	Alarm
282	Data storage	1. Restart device 2. Contact service	F	Alarm
283	Memory content	1. Transfer data or reset device 2. Contact service	F	Alarm
311	Electronic failure	1. Transfer data or reset device 2. Contact service	F	Alarm
311	Electronic failure	Maintenance required! 1. Do not perform reset 2. Contact service	M	Warning
Diagnostic of configuration				
410	Data transfer	1. Check connection 2. Retry data transfer	F	Alarm
411	Up-/download active	Up-/download active, please wait	C	Warning
412	Processing Download	Download active, please wait	C	Warning
435	Linearization	Check linearization table	F	Alarm
437	Configuration incompatible	1. Restart device 2. Contact service	F	Alarm
438	Dataset	1. Check data set file 2. Check device configuration 3. Up- and download new configuration	M	Warning
482	Block in OOS	Set Block in AUTO mode	F	Alarm
484	Simulation failure mode	Deactivate simulation	C	Alarm

Diagnostic number	Short text	Remedy instructions	Status signal [from the factory]	Diagnostic behavior [from the factory]
485	Simulation measured value	Deactivate simulation	C	Warning
494	Switch output simulation	Deactivate simulation switch output	C	Warning
495	Simulation diagnostic event	Deactivate simulation	C	Warning
497	Simulation block output	Deactivate simulation	C	Warning
585	Simulation distance	Deactivate simulation	C	Warning
586	Record map	Recording of mapping please wait	C	Warning
Diagnostic of process				
801	Energy too low	Increase supply voltage	S	Warning
825	Operating temperature	1. Check ambient temperature 2. Check process temperature	F	Alarm
921	Change of reference	1. Check reference configuration 2. Check pressure 3. Check sensor	S	Warning
941	Echo lost	Check parameter 'DC value'	F	Alarm [1]
942	In safety distance	1. Check level 2. Check safety distance 3. Reset self holding	S	Alarm [1]
943	In blocking distance	Reduced accuracy Check level	S	Warning
950	Advanced diagnostic 1 to 2 occured	Maintain your diagnostic event	M	Warning [1]

1) Diagnostic behavior can be changed.

13.7 Event logbook

13.7.1 Event history

A chronological overview of the event messages that have occurred is provided in the **Event list** submenu [7].

Navigation path
Diagnostics → Event logbook → Event list

A maximum of 100 event messages can be displayed in chronological order.

Die Ereignishistorie umfasst Einträge zu:
- Diagnostic events
- Information events

7) This submenu is only available for operation via local display. In the case of operation via FieldCare, the event list can be displayed with the "Event List / HistoROM" functionality of FieldCare.

In addition to the operation time of its occurrence, each event is also assigned a symbol that indicates whether the event has occurred or is ended:
- Diagnostic event
  - ⊕: Event has occurred
  - ⊖: Event has ended
- Information event
  ⊕: Event has occurred

Calling up and closing the remedial measures

1. Press E
   ↳ The message for the remedial measures for the selected diagnostic event opens.
2. Press − + + simultaneously.
   ↳ The message about the remedial measures closes.

13.7.2 Filtering the event logbook

Using the **Filter options** parameter, you can define which category of event messages is displayed in the **Event list** submenu.

Navigation path
Diagnostics → Event logbook → Filter options

Filter categories
- All
- Failure (F)
- Function check (C)
- Out of specification (S)
- Maintenance required (M)
- Information

13.7.3 Overview of information events

Info number	Info name
I1000	--------(Device ok)
I1089	Power on
I1090	Configuration reset
I1091	Configuration changed
I1092	Trend data deleted
I1110	Write protection switch changed
I1137	Electronic changed
I1151	History reset
I1154	Reset terminal voltage min/max
I1155	Reset electronic temperature
I1156	Memory error trend
I1157	Memory error event list
I1185	Display backup done
I1186	Restore via display done
I1187	Settings downloaded with display
I1188	Display data cleared
I1189	Backup compared

Info number	Info name
I1256	Display: access status changed
I1264	Safety sequence aborted
I1335	Firmware changed
I1397	Fieldbus: access status changed
I1398	CDI: access status changed
I1512	Download started
I1513	Download finished
I1514	Upload started
I1515	Upload finished

13.8 Firmware history

Date	Firmware version	Modifications	Documentation (FMR53/FMR54, FOUNDATION Fieldbus)		
			Operating Instructions	Description of Parameters	Technical Information
06.2012	01.00.zz	Original software	BA01122F/00/EN/01.13	GP01017F/00/EN/01.13	TI01041F/00/EN/03.13
05.2015	01.01.zz	▪ additional languages ▪ HistoROM functionality enhanced ▪ Improvements and bugfixes	BA01122F/00/EN/02.15 BA01122F/00/EN/03.16 [1]	GP01017F/00/EN/02.15	TI01041F/00/EN/05.15 TI01041F/00/EN/07.16 [1]

1) Contains information on the Heartbeat wizards which are available in the latest DTM version for DeviceCare and FieldCare.

The firmware version can explicitly be ordered via the product structure. In this way it is possible to ensure compatibility of the firmware version with an existing or planned system integration.

14 Maintenance

The measuring device requires no special maintenance.

14.1 Exterior cleaning

When exterior-cleaning the device, always use cleaning agents that do not attack the surface of the hosuing and the seals.

14.2 Replacing seals

The process seals of the sensors (at the process connection) must be replaced periodically, particularly if molded seals (aseptic construction) are used. The period between changes depends on the frequency of cleaning cycles and on the temperature of the measured substance and the cleaning temperature.

15 Repairs

15.1 General information on repairs

15.1.1 Repair concept

The Endress+Hauser repair concept assumes that the devices have a modular design and that repairs can be done by the Endress+Hauser service or specially trained customers.

Spare parts are contained in suitable kits. They contain the related replacement instructions.

For more information on service and spare parts, contact the Service Department at Endress+Hauser.

15.1.2 Repairs to Ex-approved devices

When carrying out repairs to Ex-approved devices, please note the following:

- Repairs to Ex-approved devices may only be carried out by trained personnel or by the Endress+Hauser Service.
- Comply with the prevailing standards, national Ex-area regulations, safety instructions (XA) and certificates.
- Only use original spare parts from Endress+Hauser.
- When ordering a spare part, please note the device designation on the nameplate. Only replace parts with identical parts.
- Carry out repairs according to the instructions. On completion of repairs, carry out the specified routine test on the device.
- Only Endress+Hauser Service may convert a certified device into a different certified variant.
- Document all repair work and conversions.

15.1.3 Replacement of an electronics module

If an electronics module has been replaced, it is not necessary to perform a new basic setup as the calibration parameters are stored in the HistoROM which is located in the housing. However, after exchanging the main electronics module it may be necessary to record a new mapping (interference echo suppression).

15.1.4 Replacement of a device

After a complete device or electronic module has been replaced, the parameters can be downloaded into the instrument again in one of the following ways:

- Via the display module
  Condition: The configuration of the old device has been saved in the display module
  → 🖹 173.
- Via FieldCare
  Condition: The configuration of the old device has been saved to the computer via FieldCare.

You can continue to measure without carrying out a new setup. Only a linearization and a tank map (interference echo suppression) have to be recorded again.

15.2 Spare parts

- A few interchangeable measuring device components are identified by a spare part nameplate. This contains information about the spare part.
- The connection compartment cover of the device contains a spare part nameplate that includes the following information:
  - A list of the most important spare parts for the measuring device, including their ordering information.
  - The URL for the *W@M Device Viewer* (www.endress.com/deviceviewer): There, all spare parts for the measuring device are listed, including the order code, and can be ordered. If available, the corresponding Installation Instructions can also be downloaded there.

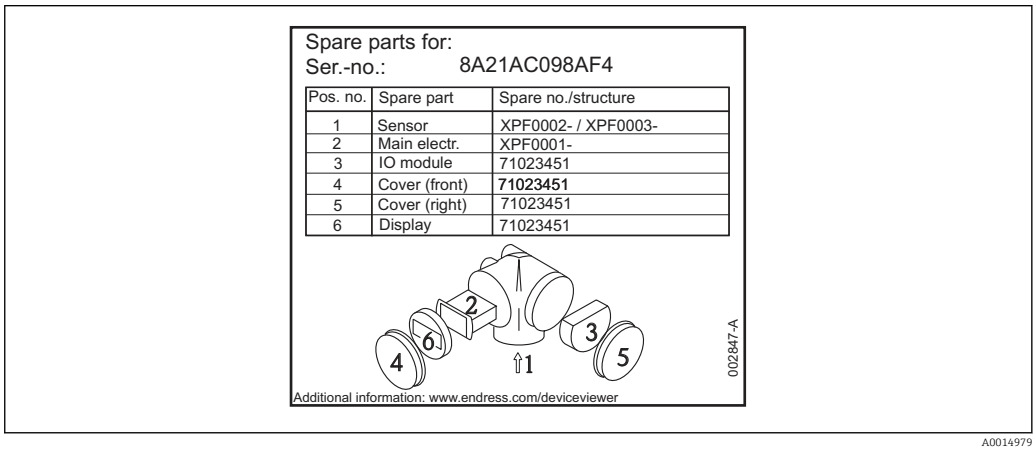

30 *Example for spare part nameplate in connection compartment cover*

Measuring device serial number:
- Is located on the device and spare part nameplate.
- Can be read out via the "Serial number" parameter in the "Device information" submenu.

15.3 Return

The measuring device must be returned if it is need of repair or a factory calibration, or if the wrong measuring device has been delivered or ordered. Legal specifications require Endress+Hauser, as an ISO-certified company, to follow certain procedures when handling products that are in contact with the medium.

To ensure safe, swift and professional device returns, please refer to the procedure and conditions for returning devices provided on the Endress+Hauser website at http://www.endress.com/support/return-material

15.4 Disposal

Observe the following notes during disposal:
- Observe valid federal/national regulations.
- Ensure proper separation and reuse of the device components.

16 Accessories

16.1 Device-specific accessories

16.1.1 Weather protection cover

Accessory	Description
Weather protection cover	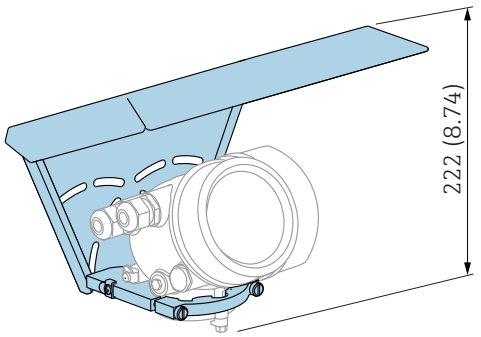 A0015466 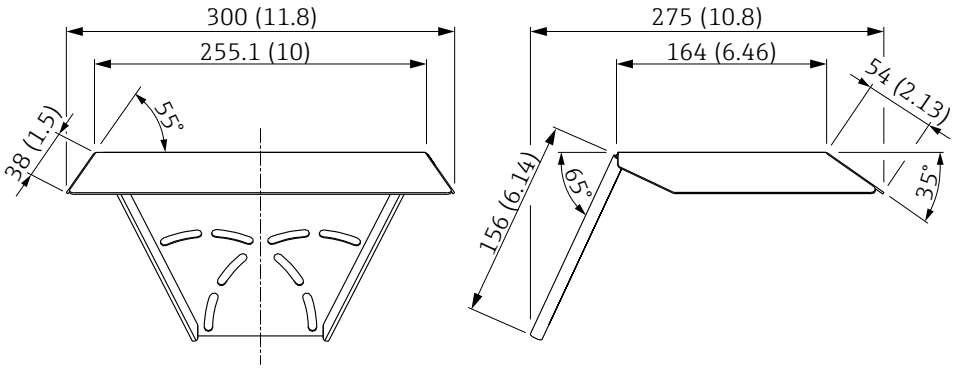 A0015472 *31 Weather protection cover; Dimensions: mm (in)* The weather protection cover can be ordered together with the device (product structure, feature 620 "Accessory Enclosed", option PB "Weather Protection Cover"). Alternatively, it can be separately ordered as an accessory; order code 71162242.

16.1.2 Antenna extension FAR10 (for FMR54)

Accessory	Description
Antenna extension FAR10 (for FMR54)	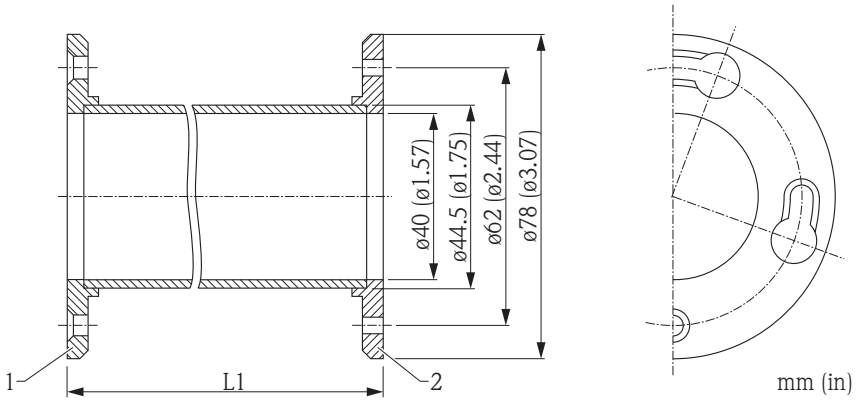 A0018879 *1 Instrument connection* *2 Horn connection* **Material:** ▪ 316L (1.4404) ▪ Alloy B2 ▪ Alloy C4 **Length L1:** ▪ 100 mm (4 in) ▪ 200 mm (8 in) ▪ 300 mm (12 in) ▪ 400 mm (16 in) Detailed ordering information is available from the following sources: ▪ In the Product Configurator on the Endress+Hauser website: www.endress.com → Select country → Instruments → Select device → Product page function: Configure this product ▪ From your Endress+Hauser Sales Center: www.endress.com/worldwide

16.1.3 Remote display FHX50

Accessories	Description
Remote display FHX50	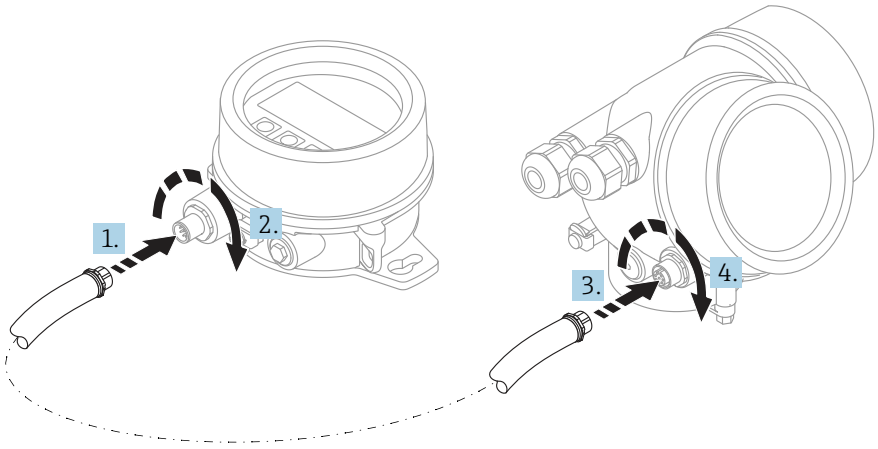 A0019128 ▪ Material: – Plastic PBT – 316L/1.4404 – Aluminum ▪ Degree of protection: IP68 / NEMA 6P and IP66 / NEMA 4x ▪ Suitable for display modules: – SD02 (push buttons) – SD03 (touch control) ▪ Connecting cable: – Cable supplied with device up to 30 m (98 ft) – Standard cable supplied by customer up to 60 m (196 ft) ▪ Ambient temperature range: −40 to 80 °C (−40 to 176 °F) ▪ Ambient temperature range (option): −50 to 80 °C (−58 to 176 °F) [1] ▪ If the remote display should be used, order the device version "Prepared for display FHX50" (feature 030, version L, M or N). For the FHX50, you must select option A: "Prepared for display FHX50" under feature 050 "Measuring device version". ▪ If the device version "Prepared for display FHX50" was not originally ordered and a FHX50 display is to be retrofitted, you must select version B "Not prepared for display FHX50" under feature 050: "Measuring device version" when ordering the FHX50. In this case, a retrofit kit for the device is supplied with the FHX50. The kit can be used to prepare the device so that the FHX50 can be used. Use of the FHX50 may be restricted for transmitters with an approval. A device can only be retrofitted with the FHX50 if the option L, M or N ("Prepared for FHX50") is listed under *Basic specifications*, item 4 "Display, operation" in the Safety Instructions (XA) for the device. Also pay attention to the Safety Instructions (XA) of the FHX50. Retrofitting is not possible on transmitters with: ▪ An approval for use in areas with flammable dust (dust ignition-proof approval) ▪ Ex nA type of protection For details, see document SD01007F.

1) This range is valid if option JN "Ambient temperature transmitter −50 °C (−58 °F)" has been selected in ordering feature 580 "Test, Certificate". If the temperature is permanently below −40 °C (−40 °F), failure rates may be increased.

16.1.4 Overvoltage protection

Accessory	Description
Overvoltage protection for 2-wire-devices OVP10 (1 channel) OVP20 (2 channel)	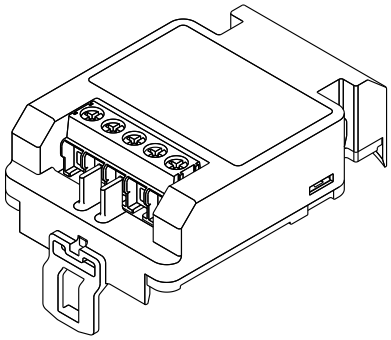 A0021734 **Technical data** ▪ Resistance per channel: 2 * 0.5 Ω_{max} ▪ Threshold DC voltage: 400 to 700 V ▪ Threshold impulse voltage: < 800 V ▪ Capacitance at 1 MHz: < 1.5 pF ▪ Nominal arrest impulse voltage (8/20 µs): 10 kA ▪ Suited for wire cross-sections: 0.2 to 2.5 mm^2 (24 to 14 AWG) **Ordering with device** The overvoltage protection module is preferably ordered with the device. See product structure, feature 610 "Accessory mounted", option NA "Overvoltage protection". Separate ordering of the module is only necessary if a device is to retrofitted with the overvoltage protection. **Order code for retrofitting** ▪ For 1-channel devices (feature 020, option A) OVP10: 71128617 ▪ For 2-channel devices (feature 020, option B, C, E or G) OVP20 : 71128619 **Hosuing lid for retrofitting** In order to keep the necessary safety distances, the housing lid needs to be replaced if the device is retrofitted with the overvoltage protection. Depending on the housing type, the order code of the suitable lid is as follows: ▪ GT18 housing: Lid 71185516 ▪ GT19 housing: Lid 71185518 ▪ GT20 housing: Lid 71185516 **Restrictions for retrofitting** Depending on the approval of the transmitter the usage of the OVP module may be restricted. A device may only be retrofitted with an OVP module if the option *NA* (overvoltage protection) is quoted unter *Optional Specifications* in the Safety Instructions (XA) pertaining to the device. For details refer to SD01090F.

16.1.5 Gas-tight feedthrough

Accessory	Description
Gas-tight feedthrough	Chemically inert glass feedthrough; prevents migration of gases into the electronics housing. To be ordered with the device: product structure, feature 610 "Accessory Mounted", option NC "Gas-tight feedthrough"

16.1.6 Bluetooth module for HART devices

Accessory	Description
Bluetooth module	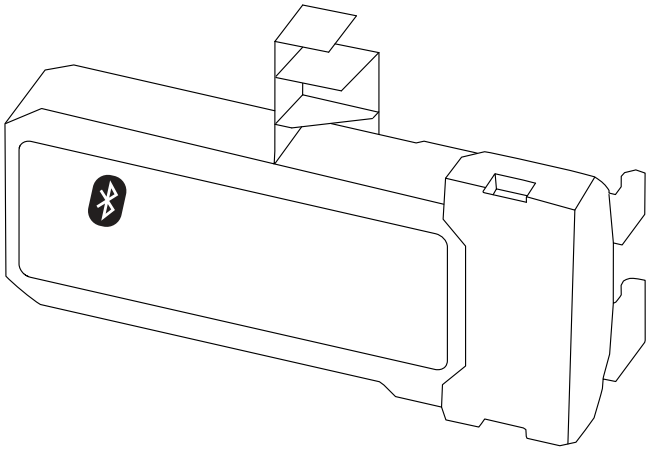 A0036493 ▪ Quick and easy commissioning via SmartBlue (app) ▪ No additional tools or adapters required ▪ Signal curve via SmartBlue (app) ▪ Encrypted single point-to-point data transmission (tested by Fraunhofer institue) and password protected communication via Bluetooth® wireless technology ▪ Range under reference conditions: > 10 m (33 ft) When using the Bluetooth module the minimum supply voltage increases by up to 3 V. **Ordering with device** The Bluetooth module is preferably ordered with the device. See product structure, feature 610 "Accessory Mounted", option NF "Bluetooth". A separate order is only necessary in case of retrofitting. **Order code for retrofitting** Bluetooth module (BT10): 71377355 **Restrictions in case of retrofitting** Depending on the approval of the transmitter, application of the Bluetooth module may be restricted. A device may only be retrofitted with a Bluetooth module if the option *NF* (Bluetooth) is listed in the associated Safety Instructions (XA) under *Optional specifications*. For details refer to SD02252F.

16.2 Communication-specific accessories

Accessory	Description
Commubox FXA291	Connects Endress+Hauser field devices with CDI interface (= Endress+Hauser Common Data Interface) to the USB interface of a computer. Order code: 51516983 For details refer to Technical Information TI00405C

Accessory	Description
Field Xpert SFX350	Field Xpert SFX350 is a mobile computer for commissioning and maintenance. It enables efficient device configuration and diagnostics for HART and FOUNDATION fieldbus devices in the **non-Ex area**. For details, see Operating Instructions BA01202S

Accessory	Description
Field Xpert SFX370	Field Xpert SFX370 is a mobile computer for commissioning and maintenance. It enables efficient device configuration and diagnostics for HART and FOUNDATION fieldbus devices in the **non-Ex area** and the **Ex area**. For details, see Operating Instructions BA01202S

16.3 Service-specific accessories

Accessory	Description
DeviceCare SFE100	Configuration tool for HART, PROFIBUS and FOUNDATION Fieldbus devices Technical Information TI01134S ▪ DeviceCare is available for download at www.software-products.endress.com. The download requires a registration in the Endress+Hauser software portal. ▪ Alternatively, a DeviceCare DVD can be ordered with the device. Product structure: Feature 570 "Service", Option IV "Tooling DVD (DeviceCare Setup)".
FieldCare SFE500	FDT-based Plant Asset Management tool. Helps to configure and maintain all field devices of your plant. By supplying status information it also supports the diagnosis of the devices. Technical Information TI00028S

16.4 System components

Accessory	Description
Graphic Data Manager Memograph M	The graphic data manager Memograph M provides information on all the relevant process variables. Measured values are recorded correctly, limit values are monitored and measuring points analyzed. The data are stored in the 256 MB internal memory and also on an SD card or USB stick. For details refer to Technical Information TI00133R and Operating Instructions BA00247R

17 Operating menu

17.1 Overview of the operating menu (display module)

Navigation Operating menu

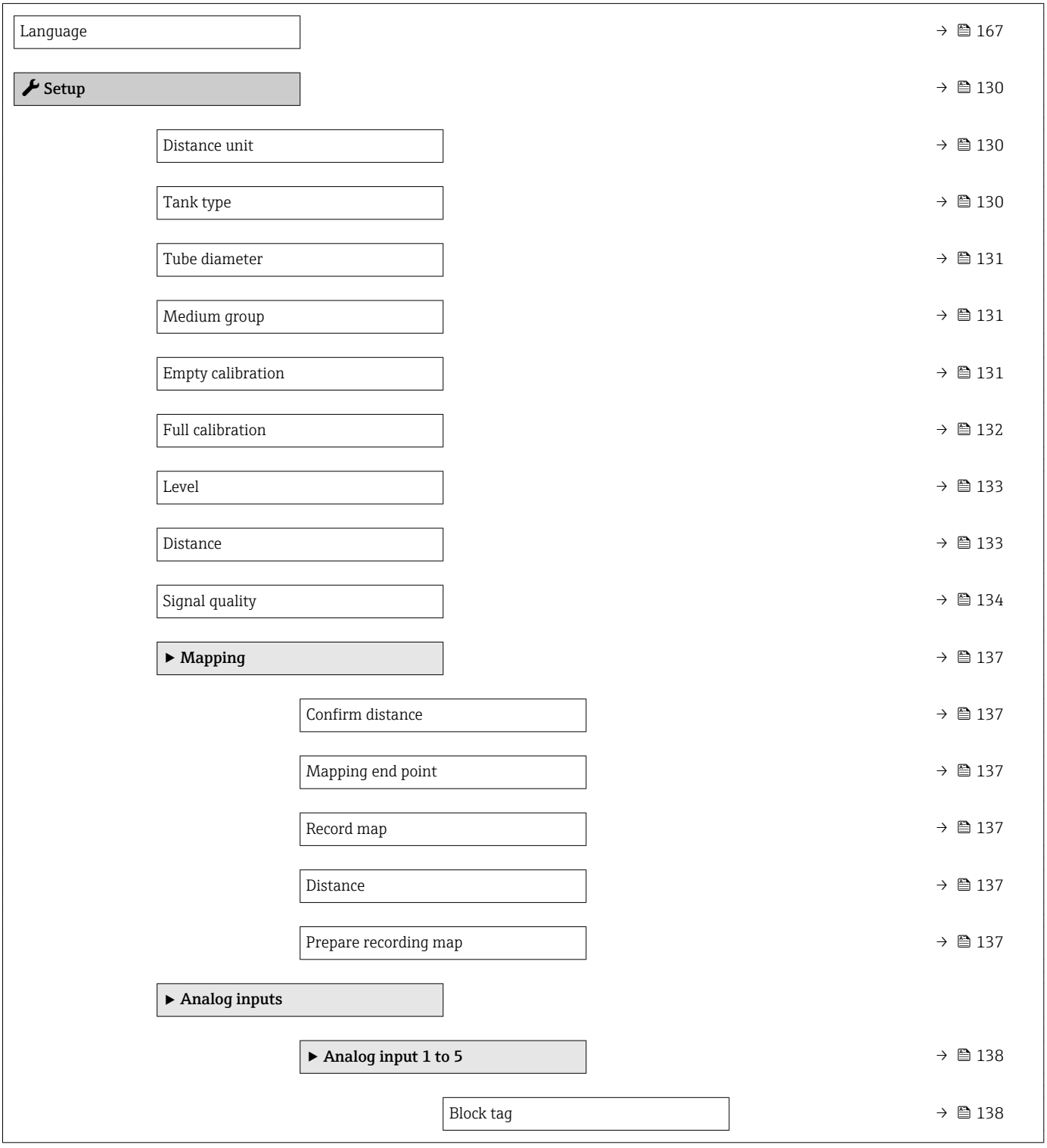

- Channel → 138
- Process Value Filter Time → 139
- ▶ **Advanced setup** → 140
  - Locking status → 140
  - Access status display → 140
  - Enter access code → 141
  - ▶ **Level** → 142
    - Medium type → 142
    - Medium property → 142
    - Max. filling speed liquid → 143
    - Max. draining speed liquid → 143
    - Advanced process conditions → 144
    - Level unit → 145
    - Blocking distance → 145
    - Level correction → 146
    - Tank/silo height → 146
  - ▶ **Linearization** → 149
    - Linearization type → 151
    - Unit after linearization → 152
    - Free text → 153
    - Maximum value → 154
    - Diameter → 154
    - Intermediate height → 154
    - Table mode → 155

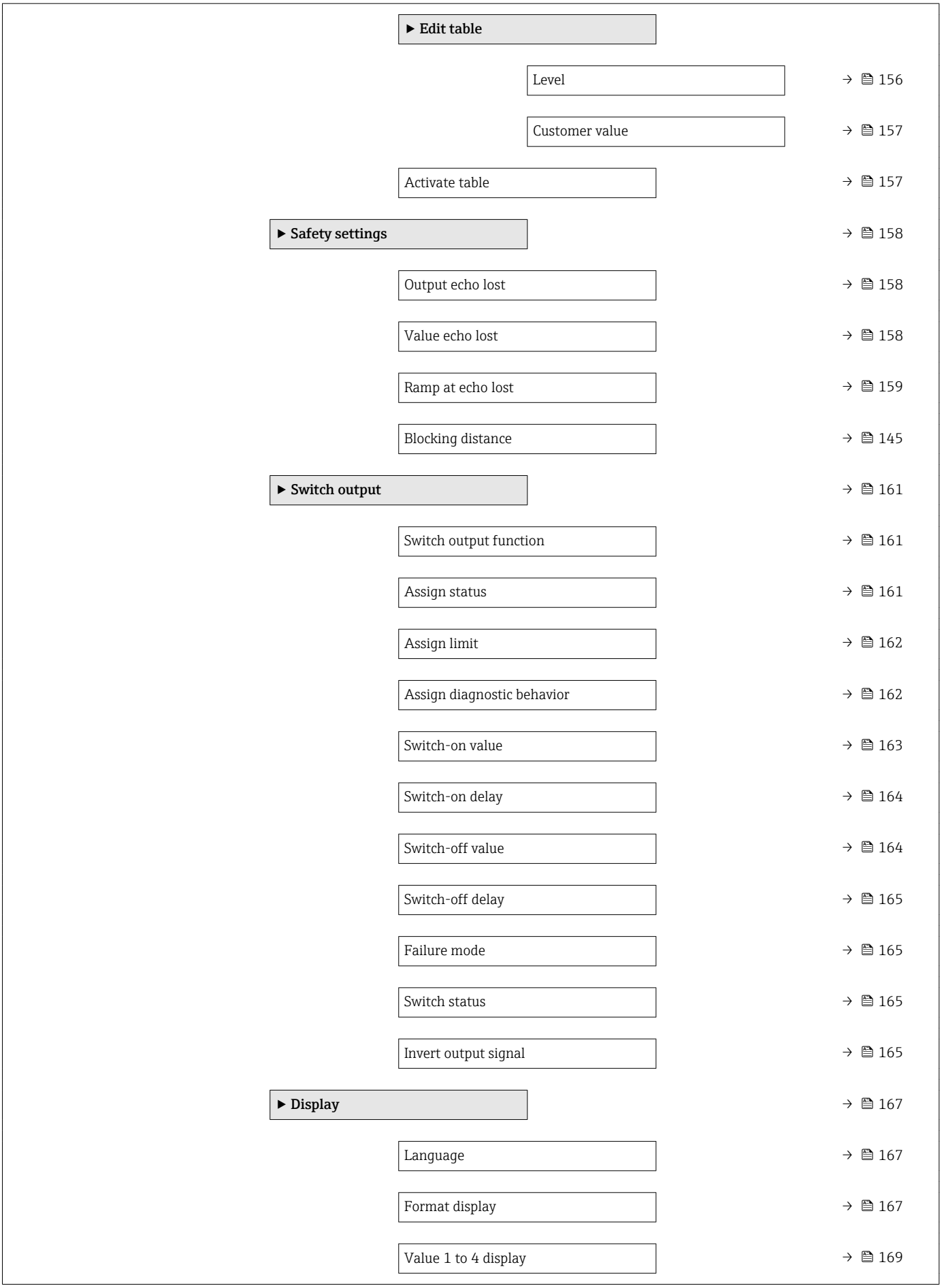
▶ Edit table
Level → 156
Customer value → 157
Activate table → 157
▶ Safety settings → 158
Output echo lost → 158
Value echo lost → 158
Ramp at echo lost → 159
Blocking distance → 145
▶ Switch output → 161
Switch output function → 161
Assign status → 161
Assign limit → 162
Assign diagnostic behavior → 162
Switch-on value → 163
Switch-on delay → 164
Switch-off value → 164
Switch-off delay → 165
Failure mode → 165
Switch status → 165
Invert output signal → 165
▶ Display → 167
Language → 167
Format display → 167
Value 1 to 4 display → 169

- Decimal places 1 to 4 → 169
- Display interval → 170
- Display damping → 170
- Header → 170
- Header text → 171
- Separator → 171
- Number format → 171
- Decimal places menu → 171
- Backlight → 172
- Contrast display → 172
- **▶ Configuration backup display** → 173
  - Operating time → 173
  - Last backup → 173
  - Configuration management → 173
  - Comparison result → 174
- **▶ Administration** → 176
  - **▶ Define access code** → 178
    - Define access code → 178
    - Confirm access code → 178
  - Device reset → 176

Diagnostics → 179

- Actual diagnostics → 179
- Previous diagnostics → 179
- Operating time from restart → 180
- Operating time → 173

- ▶ **Diagnostic list** → 181
  - Diagnostics 1 to 5 → 181
- ▶ **Event logbook** → 182
  - Filter options → 182
  - ▶ **Event list** → 182
- ▶ **Device information** → 183
  - Device tag → 183
  - Serial number → 183
  - Firmware version → 183
  - Device name → 184
  - Order code → 184
  - Extended order code 1 to 3 → 184
- ▶ **Measured values** → 185
  - Distance → 133
  - Level linearized → 153
  - Terminal voltage 1 → 186
  - Electronic temperature → 186
- ▶ **Analog inputs**
  - ▶ **Analog input 1 to 5** → 186
    - Block tag → 138
    - Channel → 138
    - Status → 187
    - Value → 187
    - Units index → 187

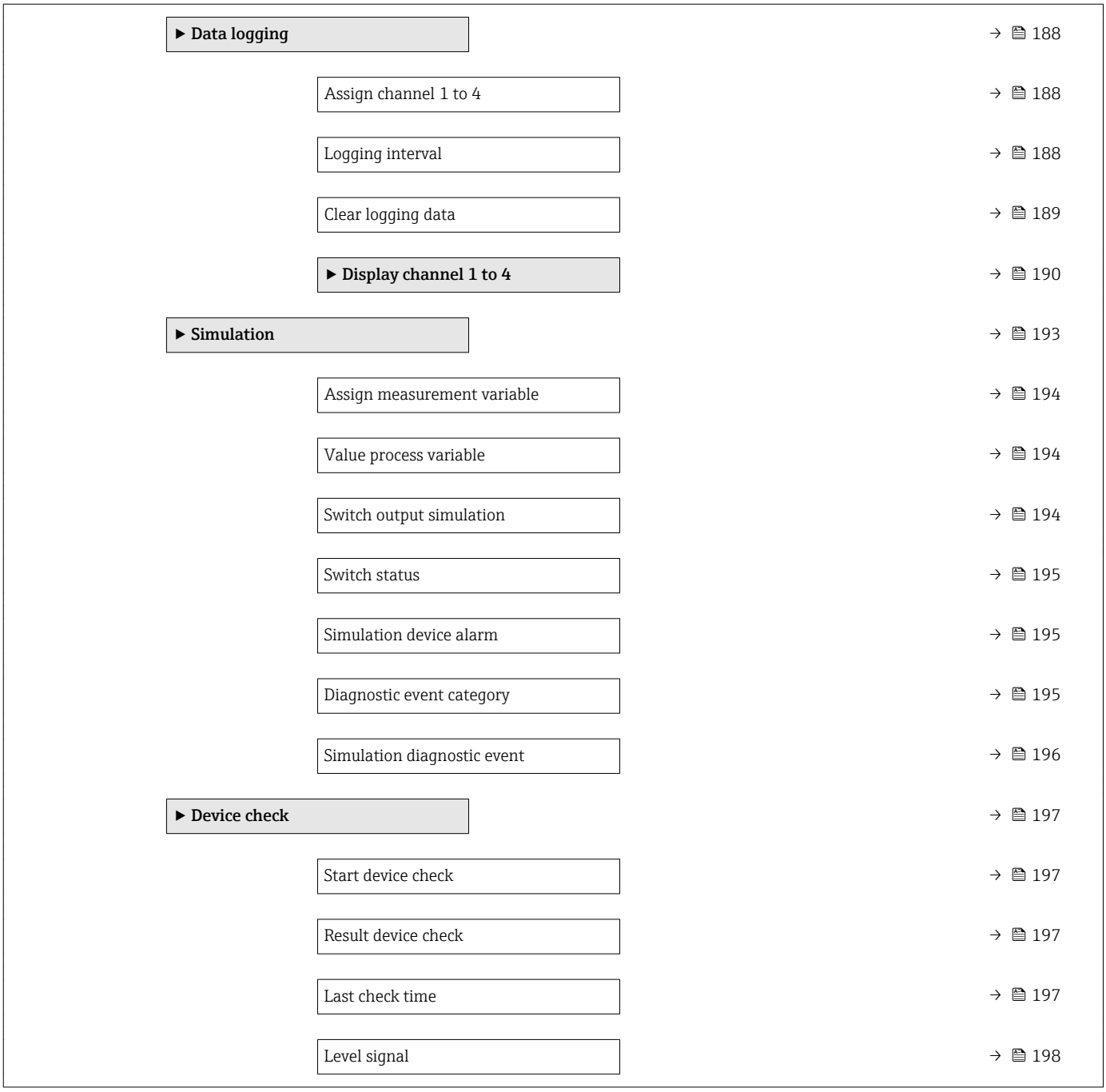
▶ Data logging → 188
Assign channel 1 to 4 → 188
Logging interval → 188
Clear logging data → 189
▶ Display channel 1 to 4 → 190
▶ Simulation → 193
Assign measurement variable → 194
Value process variable → 194
Switch output simulation → 194
Switch status → 195
Simulation device alarm → 195
Diagnostic event category → 195
Simulation diagnostic event → 196
▶ Device check → 197
Start device check → 197
Result device check → 197
Last check time → 197
Level signal → 198

17.2 Overview of the operating menu (operating tool)

Navigation Operating menu

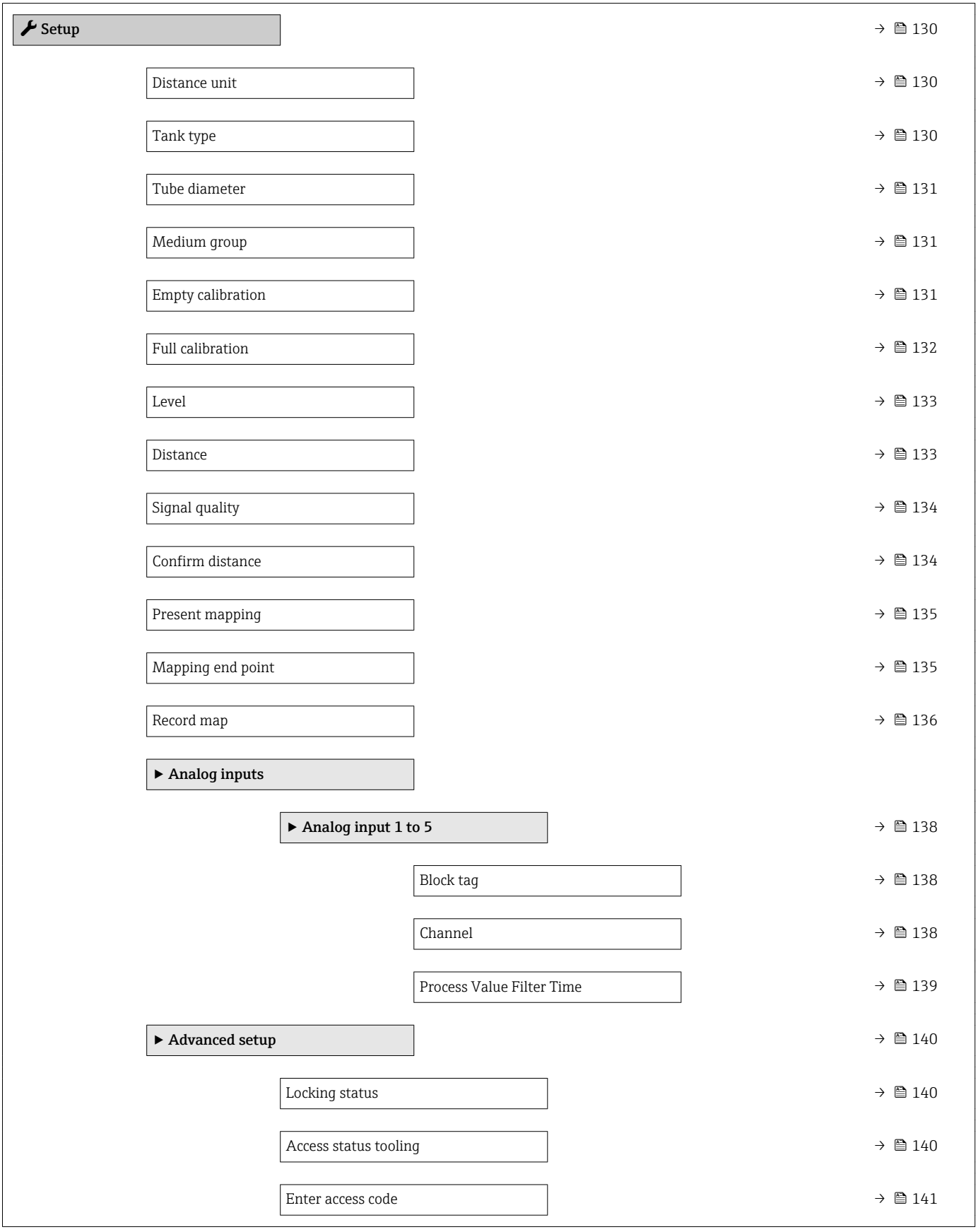

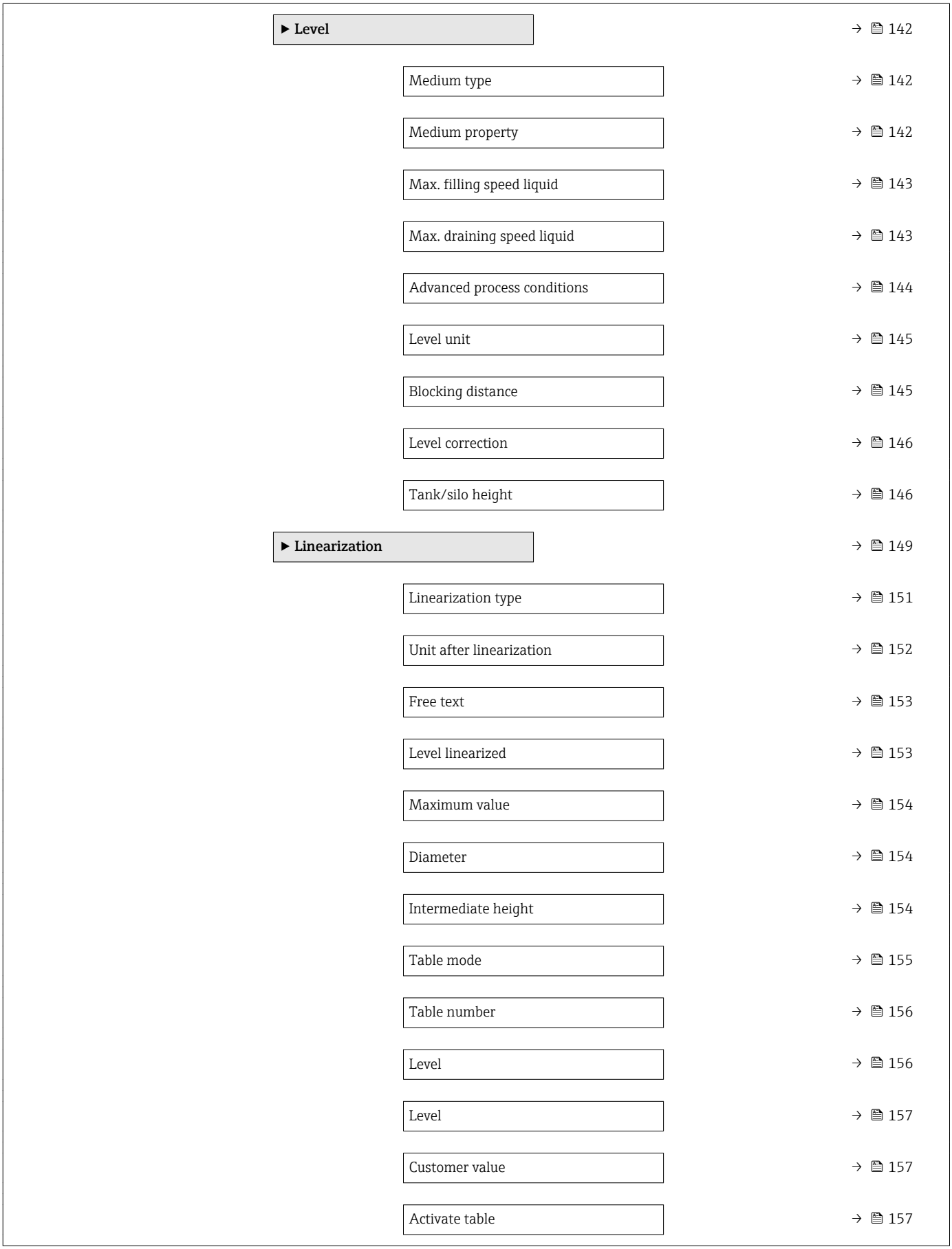
▶ Level → 142
Medium type → 142
Medium property → 142
Max. filling speed liquid → 143
Max. draining speed liquid → 143
Advanced process conditions → 144
Level unit → 145
Blocking distance → 145
Level correction → 146
Tank/silo height → 146
▶ Linearization → 149
Linearization type → 151
Unit after linearization → 152
Free text → 153
Level linearized → 153
Maximum value → 154
Diameter → 154
Intermediate height → 154
Table mode → 155
Table number → 156
Level → 156
Level → 157
Customer value → 157
Activate table → 157

▶ **Safety settings** → 158

- Output echo lost → 158
- Value echo lost → 158
- Ramp at echo lost → 159
- Blocking distance → 145

▶ **Switch output** → 161

- Switch output function → 161
- Assign status → 161
- Assign limit → 162
- Assign diagnostic behavior → 162
- Switch-on value → 163
- Switch-on delay → 164
- Switch-off value → 164
- Switch-off delay → 165
- Failure mode → 165
- Switch status → 165
- Invert output signal → 165

▶ **Display** → 167

- Language → 167
- Format display → 167
- Value 1 to 4 display → 169
- Decimal places 1 to 4 → 169
- Display interval → 170
- Display damping → 170
- Header → 170

- Header text → 171
- Separator → 171
- Number format → 171
- Decimal places menu → 171
- Backlight → 172
- Contrast display → 172
- **▶ Configuration backup display** → 173
  - Operating time → 173
  - Last backup → 173
  - Configuration management → 173
  - Backup state → 174
  - Comparison result → 174
- **▶ Administration** → 176
  - Define access code → 178
  - Device reset → 176

Diagnostics → 179

- Actual diagnostics → 179
- Timestamp → 179
- Previous diagnostics → 179
- Timestamp → 180
- Operating time from restart → 180
- Operating time → 173
- **▶ Diagnostic list** → 181
  - Diagnostics 1 to 5 → 181
  - Timestamp 1 to 5 → 181

- ▶ **Device information** → 183
  - Device tag → 183
  - Serial number → 183
  - Firmware version → 183
  - Device name → 184
  - Order code → 184
  - Extended order code 1 to 3 → 184
- ▶ **Measured values** → 185
  - Distance → 133
  - Level linearized → 153
  - Terminal voltage 1 → 186
  - Electronic temperature → 186
- ▶ **Analog inputs**
  - ▶ **Analog input 1 to 5** → 186
    - Block tag → 138
    - Channel → 138
    - Status → 187
    - Value → 187
    - Units index → 187
- ▶ **Data logging** → 188
  - Assign channel 1 to 4 → 188
  - Logging interval → 188
  - Clear logging data → 189
- ▶ **Simulation** → 193
  - Assign measurement variable → 194

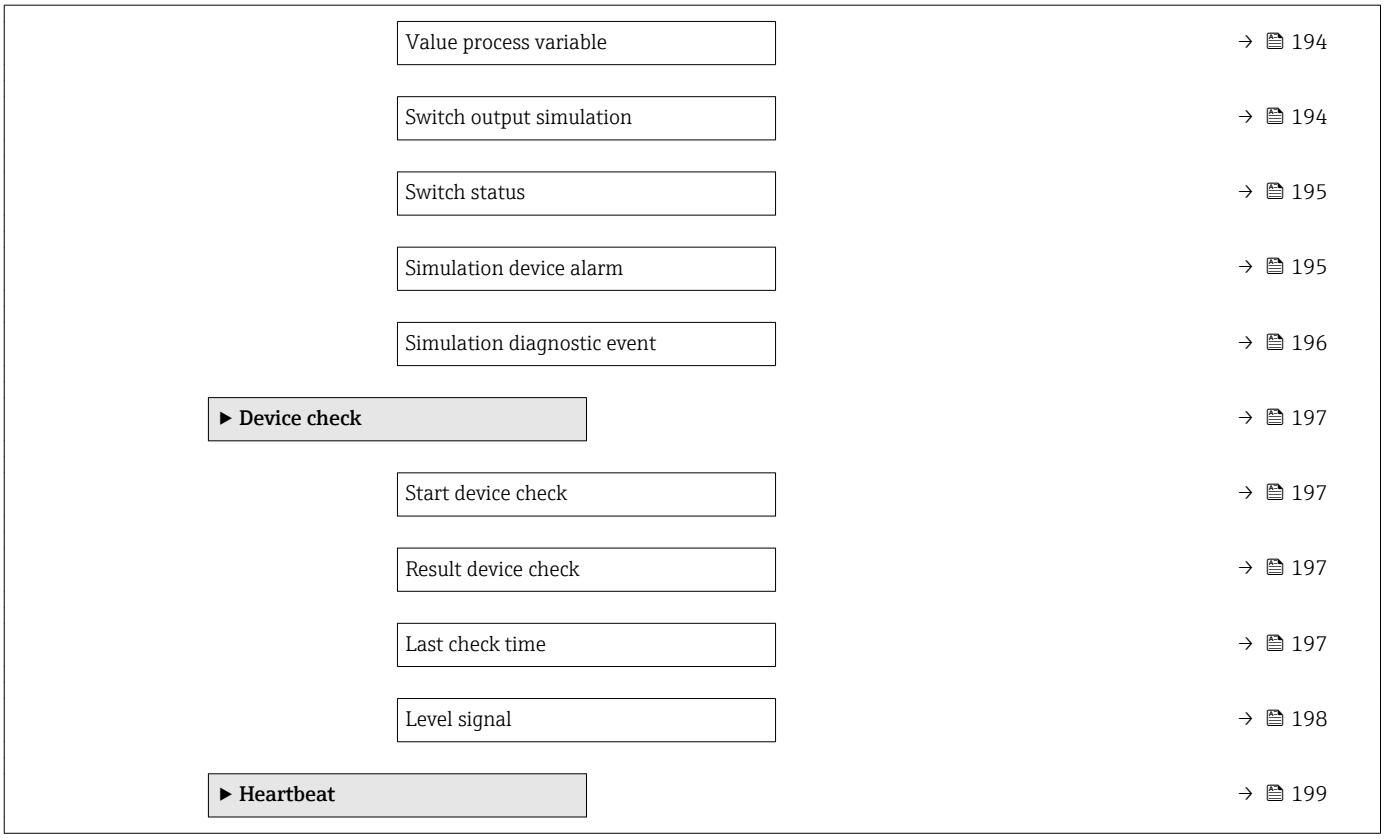
Value process variable
→ 194
Switch output simulation
→ 194
Switch status
→ 195
Simulation device alarm
→ 195
Simulation diagnostic event
→ 196
▶ Device check
→ 197
Start device check
→ 197
Result device check
→ 197
Last check time
→ 197
Level signal
→ 198
▶ Heartbeat
→ 199

17.3 "Setup" menu

- : Marks the navigation path to the parameter via the display and operating module.
- : Marks the navigation path to the parameter via an operating tool (e.g. FieldCare).
- : Marks parameters which can be locked via the software locking.

Navigation Setup

Distance unit

Navigation Setup → Distance unit

Description Length unit for distance calculation.

Selection

SI units	*US units*
▪ mm	▪ ft
▪ m	▪ in

Factory setting m

Tank type

Navigation Setup → Tank type

Prerequisite **Medium type (→ 142) = Liquid**

Description Select tank type.

Selection
- Bypass / pipe
- Stilling well
- Workbench test
- Open channel
- Sphere
- Storage vessel
- Process vessel standard
- Process vessel with agitator
- Wave guide antenna

Factory setting Depending on the antenna

Additional information Depending on the antenna some of the options mentioned above may not be available or there may be additional options.

Tube diameter

Navigation Setup → Tube diameter

Prerequisite **Tank type (→ 130) = Bypass / pipe**

Description Specify diameter of bypass or stilling well.

User entry 0 to 9.999 m

Factory setting 0 m

Medium group

Navigation Setup → Medium group

Prerequisite **Medium type (→ 142) = Liquid**

Description Select medium group.

Selection
- Others
- Water based (DC >= 4)

Factory setting Others

Additional information This parameter roughly specifies the dielectric constant (DC) of the medium. For a more detailed definition of the DC use the **Medium property** parameter (→ 142).

The **Medium group** parameter presets the **Medium property** parameter (→ 142) as follows:

Medium group	Medium property (→ 142)
Others	Unknown
Water based (DC >= 4)	DC 4 ... 7

The **Medium property** parameter can be changed at a later point of time. However, when doing so, the **Medium group** parameter retains its value. Only the **Medium property** parameter is relevant for the signal evaluation.

The measuring range may be reduced for small dielectric constants. For details refer to the Technical Information (TI) of the respective device.

Empty calibration

Navigation Setup → Empty calibration

Description Distance process connection to min. level.

User entry Depending on the antenna

Factory setting Depending on the antenna

Additional information

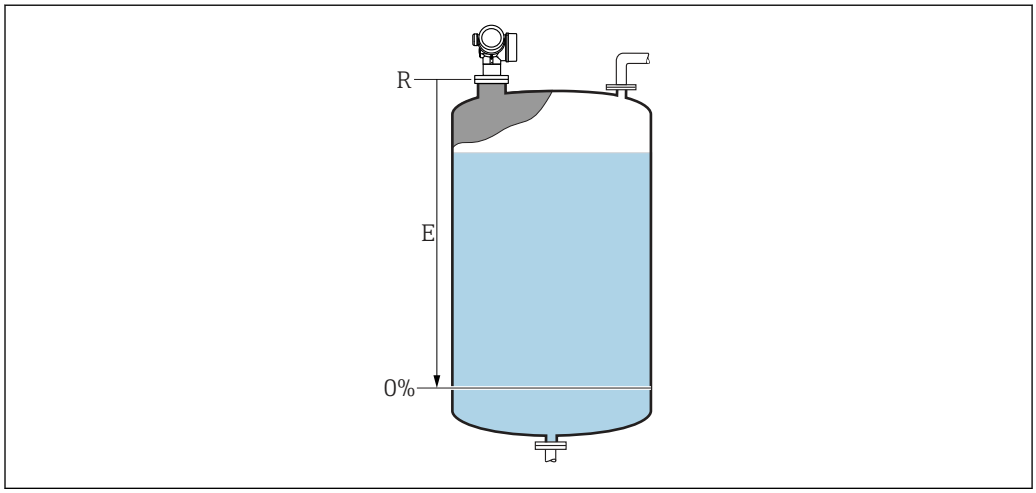

32 *Empty calibration (E) for level measurements in liquids*

The measuring range starts at the point at which the radar beam hits the tank or silo bottom. In the case of dished boiler ends or conical outlets levels below this point can not be measured.

Full calibration

Navigation Setup → Full calibration

Description Span: max. level - min level.

User entry Depending on the antenna

Factory setting Depending on the antenna

Additional information

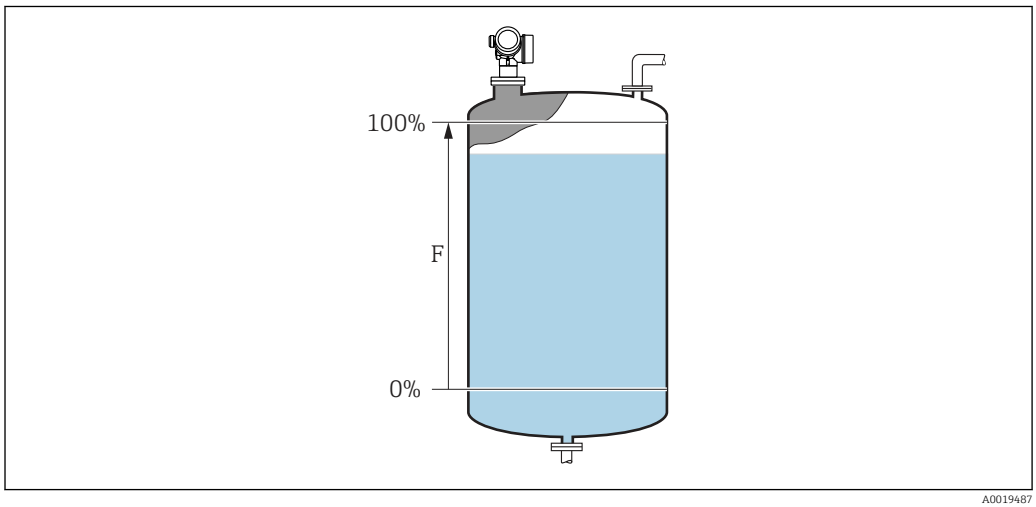

33 *Full calibration (F) for level measurements in liquids*

Level

Navigation Setup → Level

Description Displays measured level L (before linearization).

Additional information

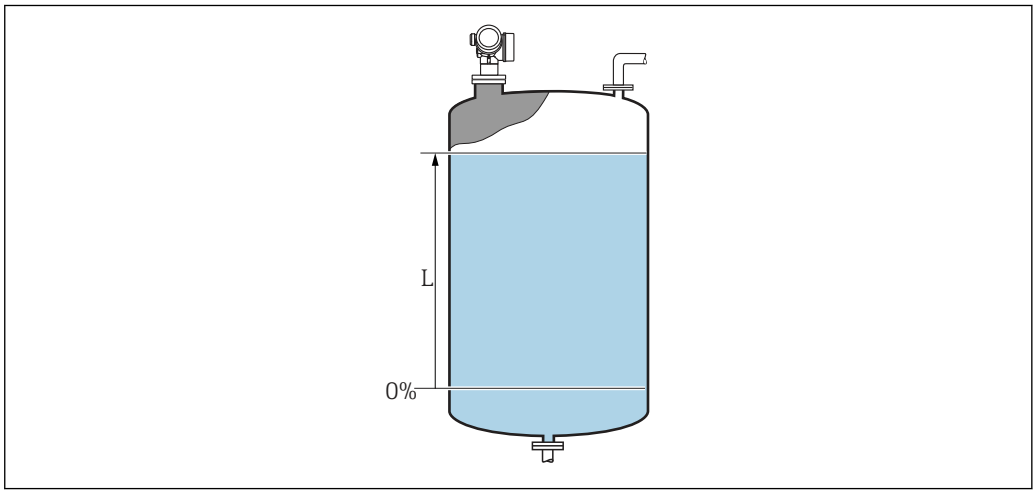

34 *Level in case of liquid measurements*

The unit is defined in the **Level unit** parameter (→ 145).

Distance

Navigation Setup → Distance

Description Displays the measured distance D between the reference point (lower edge of the flange or threaded connection) and the level.

Additional information

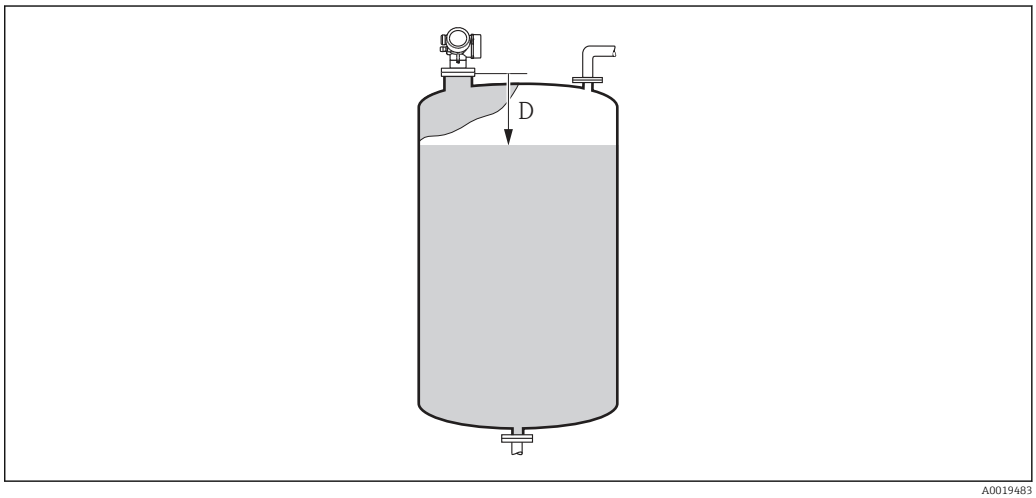

35 *Distance for liquid measurements*

The unit is defined in the **Distance unit** parameter (→ 130).

Signal quality

Navigation Setup → Signal quality

Description Displays the signal quality of the level echo.

Additional information

Meaning of the display options
- **Strong**
  The evaluated echo exceeds the threshold by at least 10 dB.
- **Medium**
  The evaluated echo exceeds the threshold by at least 5 dB.
- **Weak**
  The evaluated echo exceeds the threshold by less than 5 dB.
- **No signal**
  The device does not find a usable echo.

The signal quality indicated in this parameter always refers to the currently evaluated echo: either the level echo or the tank bottome echo. To differentiate between these two, the quality of the tank bottom echo echo is always displayed in brackets.

In case of a lost echo (**Signal quality = No signal**) the device generates the following error message:
- F941, for **Output echo lost (→ 158) = Alarm**.
- S941, if another option has been selected in **Output echo lost (→ 158)**.

Confirm distance

Navigation Setup → Confirm distance

Description Specify, whether the measured distance matches the real distance.

Depending on the selection the device automatically sets the range of mapping.

Selection
- Manual map
- Distance ok
- Distance unknown
- Distance too small *
- Distance too big *
- Tank empty
- Factory map

Factory setting Distance unknown

Additional information

Meaning of the options
- **Manual map**
  To be selected if the range of mapping is to be defined manually in the **Mapping end point** parameter (→ 135). In this case it is not necessary to confirm the distance.
- **Distance ok**
  To be selected if the measured distance matches the actual distance. The device performs a mapping.
- **Distance unknown**
  To be selected if the actual distance is unknown. A mapping can not be performed in this case.

* Visibility depends on order options or device settings

- **Distance too small**
  To be selected if the measured distance is smaller than the actual distance. The device searches for the next echo and returns to the **Confirm distance** parameter. The distance is recalculated and displayed. The comparison must be repeated until the displayed distance matches the actual distance. After this, the recording of the map can be started by selecting **Distance ok**.
- **Distance too big** [8)]
  To be selected if the measured distance exceeds the actual distance. The device adjusts the signal evaluation and returns to the **Confirm distance** parameter. The distance is recalculated and displayed. The comparison must be repeated until the displayed distance matches the actual distance. After this, the recording of the map can be started by selecting **Distance ok**.
- **Tank empty**
  To be selected if the tank is completely empty. The device records a mapping covering the complete measuring range as defined by the **Tank/silo height** parameter (→ 146). By default, **Tank/silo height** = **Empty calibration**.
  Take into account that in case of conical outlets, for example, a measurement is only possible up to the point at which the radar hits the bottom of the tank or silo. If the **Tank empty** option is used, **Empty calibration (→ 131)** and **Tank/silo height** may not reach below this point as otherwise the empty signal is suppressed.
- **Factory map**
  To be selected if the present mapping curve (if one exists) is to be deleted. The device returns to the **Confirm distance** parameter and a new mapping can be recorded.

When operating via the display module, the measured distance is displayed together with this parameter for reference purposes.

If the teaching procedure with the **Distance too small** option or the **Distance too big** option is quit before the distance has been confirmed, a map is **not** recorded and the teaching procedure is reset after 60 s.

Present mapping

Navigation Setup → Present mapping

Description Indicates up to which distance a mapping has already been recorded.

Mapping end point

Navigation Setup → Mapping end point

Prerequisite **Confirm distance (→ 134)** = **Manual map** or **Distance too small**

Description Specify new end of the mapping.

User entry 0.1 to 999 999.9 m

Factory setting 0.1 m

8) Only available for "Expert → Sensor → Echo tracking → **Evaluation mode** parameter" = "Short time history" or "Long time history"

Additional information

This parameter defines up to which distance the new mapping is to be recorded. The distance is measured from the reference point, i.e. from the lower edge of the mounting flange or the threaded connection.

For reference purposes the **Present mapping** parameter (→ 135) is displayed together with this parameter. It indicates up to which distance a mapping has already been recorded.

Record map

Navigation

Setup → Record map

Prerequisite

Confirm distance (→ 134) = **Manual map** or **Distance too small**

Description

Start recording of the map.

Selection

- No
- Record map
- Overlay map
- Factory map
- Delete partial map

Factory setting

No

Additional information

Meaning of the options

- **No**
  The map is not recorded.
- **Record map**
  The map is recorded. After the recording is completed, the new measured distance and the new mapping range appear on the display. When operating via the local display, these values must be confirmed by pressing ☑.
- **Overlay map**
  The new mapping curve is generated by overlaying the old and the current envelope curves.
- **Factory map**
  The factory map stored in the ROM of the device is used.
- **Delete partial map**
  The mapping curve is deleted up to **Mapping end point (→ 135)**.
  The mapping curve is deleted between **Mapping start point** and **Mapping end point (→ 135)**.

17.3.1 "Mapping" wizard

The **Mapping** wizard is only available when operating via the local display. When operating via an operating tool, all parameters concerning the mapping are located directly in the **Setup** menu (→ 130).

In the **Mapping** wizard two parameters are displayed simultaneously on the display module at any one time. The upper parameter can be edited, whereas the lower parameter is displayed for reference purposes only.

Navigation Setup → Mapping

Confirm distance

Navigation Setup → Mapping → Confirm distance

Description → 134

Mapping end point

Navigation Setup → Mapping → Mapping end point

Description → 135

Record map

Navigation Setup → Mapping → Record map

Description → 136

Distance

Navigation Setup → Mapping → Distance

Description → 133

Prepare recording map

Navigation Setup → Mapping → Prepare recording map

Description Indicates the progress of the recording of the map.

User interface
- Init. recording
- In progress
- Finished

17.3.2 "Analog input 1 to 5" submenu

There is an **Analog inputs** submenu for every AI block of the device. The AI block is used to configure the measured value transmission to the bus.

Only the most basic properties of the AI block can be configured in this submenu. For a detailed configuration of the AI blocks refer to the **Expert** menu.

Navigation Setup → Analog inputs → Analog input 1 to 5

Block tag

Navigation Setup → Analog inputs → Analog input 1 to 5 → Block tag

Description Defined to be unique throughout the control system at one plant site. The tag may be changed using the FB_Tag service.

Factory setting

Channel

Navigation Setup → Analog inputs → Analog input 1 to 5 → Channel

Description Use this function to select the input value that should be processed in the Analog Input function block.

Selection
- Uninitialized
- Level linearized
- Absolute echo amplitude
- Distance
- Electronic temperature
- Relative echo amplitude
- Analog output adv. diagnostics 1
- Analog output adv. diagnostics 2
- Terminal voltage

Factory setting Uninitialized

Process Value Filter Time

Navigation Setup → Analog inputs → Analog input 1 to 5 → Process Value Filter Time

Description Use this function to enter the filter time specification for the filtering of the unconverted input value (PV).

User entry Positive floating-point number

Factory setting 0 s

Additional information *Factory setting*

If the value 0 s is entered, filtering will not be performed.

17.3.3 "Advanced setup" submenu

Navigation Setup → Advanced setup

Locking status

Navigation Setup → Advanced setup → Locking status

Description Indicates the write protection with the highest priority that is currently active.

User interface
- Hardware locked
- Temporarily locked

Additional information

Meaning and priorities of the types of write protection
- **Hardware locked (priority 1)**
  The DIP switch for hardware locking is activated on the main electronics module. This locks write access to the parameters.
- **SIL locked (priority 2)**
  The SIL mode is activated. Writing access to the relevant parameters is denied.
- **WHG locked (priority 3)**
  The WHG mode is activated. Writing access to the relevant parameters is denied.
- **Temporarily locked (priority 4)**
  Write access to the parameters is temporarily locked on account of internal processes in progress in the device (e.g. data upload/download, reset etc.). The parameters can be modified as soon as the processes are complete.

On the display module, the -symbol appears in front of parameters that cannot be modified since they are write-protected.

Access status tooling

Navigation Setup → Advanced setup → Access status tooling

Description Shows the access authorization to the parameters via the operating tool.

Additional information

The access authorization can be changed via the **Enter access code** parameter (→ 141).

If additional write protection is active, this restricts the current access authorization even further. The write protection status can be viewed via the **Locking status** parameter (→ 140).

Access status display

Navigation Setup → Advanced setup → Access status display

Prerequisite The device has a local display.

Description Indicates access authorization to parameters via local display.

Additional information

The access authorization can be changed via the **Enter access code** parameter (→ 141).

If additional write protection is active, this restricts the current access authorization even further. The write protection status can be viewed via the **Locking status** parameter (→ 140).

Enter access code

Navigation Setup → Advanced setup → Enter access code

Description Enter access code to disable write protection of parameters.

User entry 0 to 9 999

Additional information

- For local operation, the customer-specific access code, which has been defined in the **Define access code** parameter (→ 176), has to be entered.
- If an incorrect access code is entered, the user retains his current access authorization.
- The write protection affects all parameters marked with the -symbol in this document. On the local display, the -symbol in front of a parameter indicates that the parameter is write-protected.
- If no key is pressed for 10 min, or the user switches from the navigation and editing mode back to the measured value display mode, the device automatically locks the write-protected parameters after another 60 s.

Please contact your Endress+Hauser Sales Center if you lose your access code.

"Level" submenu

Navigation Setup → Advanced setup → Level

Medium type

Navigation Setup → Advanced setup → Level → Medium type

Description Specify type of medium.

User interface
- Liquid
- Solid

Factory setting FMR50, FMR51, FMR52, FMR53, FMR54: **Liquid**

Additional information This parameter determines the value of several other parameters and strongly influences the complete signal evaluation. Therefore, it is strongly recommended **not to change** the factory setting.

Medium property

Navigation Setup → Advanced setup → Level → Medium property

Description Specify relative dielectric constant ε_r of the medium.

Selection
- Unknown
- DC 1.4 ... 1.6
- DC 1.6 ... 1.9
- DC 1.9 ... 2.5
- DC 2.5 ... 4
- DC 4 ... 7
- DC 7 ... 15
- DC > 15

Factory setting Dependent on **Medium type (→ 142)** and **Medium group (→ 131)**.

Additional information *Dependency on "Medium type" and "Medium group"*

Medium type (→ 142)	Medium group (→ 131)	Medium property
Solid		Unknown
Liquid	Water based (DC >= 4)	DC 4 ... 7
	Others	Unknown

For dielectric constants (DC values) of many media commonly used in various industries refer to:
- the Endress+Hauser DC manual (CP01076F)
- the Endress+Hauser "DC Values App" (available for Android and iOS)

Max. filling speed liquid

Navigation Setup → Advanced setup → Level → Max. filling speed liquid

Prerequisite **Medium type (→ 142) = Liquid**

Description Select expected maximum filling speed.

Selection
- Slow < 1cm (0,4in) /min
- Medium < 10cm (4in) /min
- Standard < 1m (40in) /min
- Fast < 2m (80in) /min
- Very fast > 2m (80in) /min
- No filter / test

Factory setting Depending on the **Tank type** parameter (→ 130)

Additional information The device adjusts the signal evaluation filters and the damping of the output signal to the typical rate of level change defined in this parameter:

Max. filling speed liquid	Step response time / s
Slow < 1cm (0,4in) /min	90
Medium < 10cm (4in) /min	50
Standard < 1m (40in) /min	20
Fast < 2m (80in) /min	8
Very fast > 2m (80in) /min	5
No filter / test	< 1

Max. filling speed liquid is preset by **Tank type (→ 130)**. It can, however, be adjusted to the process in the vessel at any time. If **Tank type (→ 130)** is changed again at a later point of time, it may be necessary to repeat the fine adjustment.

Max. draining speed liquid

Navigation Setup → Advanced setup → Level → Max. draining speed liquid

Prerequisite **Medium type (→ 142) = Liquid**

Description Select expected maximum draining speed.

Selection
- Slow < 1cm (0,4in) /min
- Medium < 10cm (4in) /min
- Standard < 1m (40in) /min
- Fast < 2m (80in) /min
- Very fast > 2m (80in) /min
- No filter / test

Factory setting Depending on the **Tank type** parameter (→ 130)

Additional information

The device adjusts the signal evaluation filters and the damping of the output signal to the typical rate of level change defined in this parameter:

Max. draining speed liquid (→ 143)	Step response time / s
Slow < 1cm (0,4in) /min	90
Medium < 10cm (4in) /min	50
Standard < 1m (40in) /min	20
Fast < 2m (80in) /min	8
Very fast > 2m (80in) /min	5
No filter / test	< 1

Max. draining speed liquid (→ 143) is preset by **Tank type (→ 130)**. It can, however, be adjusted to the process in the vessel at any time. If **Tank type (→ 130)** is changed again at a later point of time, it may be necessary to repeat the fine adjustment.

Advanced process conditions

Navigation

Setup → Advanced setup → Level → Advanced process conditions

Description

Specify additional process conditions (if required).

Selection

- Foam (>5cm/0,16ft)
- Changing DC values

Factory setting

None

Additional information

"Foam (>5cm/0,16ft)" option

This option makes sure that no tank history is used which has been recorded while foam was present at the surface and thus is no reliable map of the tank property. To achieve this, the setting **Evaluation mode** = **Long time history** is deactivated.

The **Foam (>5cm/0,16ft)** option is only available for liquid applications (FMR50, FMR51, FMR52, FMR53, FMR54).

"Changing DC values" option

A tank history which has been recorded with **Evaluation mode** = **Long time history** is only valid for a fixed dielectric constant. The **Changing DC values** option disables the setting **Evaluation mode** = **Long time history** and thus avoids wrong measuring values in the case of a changing dielectric constant.

The **Changing DC values** option is only available for liquid applications (FMR50, FMR51, FMR52, FMR53, FMR54).

Level unit

Navigation Setup → Advanced setup → Level → Level unit

Description Select level unit.

Selection

SI units
- %
- m
- mm

US units
- ft
- in

Factory setting %

Additional information The level unit may differ from the distance unit defined in the **Distance unit** parameter (→ 130):

- The unit defined in the **Distance unit** parameter is used for the basic calibration (**Empty calibration (→ 131)** and **Full calibration (→ 132)**).
- The unit defined in the **Level unit** parameter is used to display the (unlinearized) level.

Blocking distance

Navigation Setup → Advanced setup → Level → Blocking distance

Description Specify blocking distance BD.

User entry 0 to 200 m

Factory setting FMR50, FMR51, FMR53, FMR54: antenna length

Additional information Signals in the blocking distance are only evaluated if they have been outside the blocking distance when the device was switched on and move into the blocking distance due to a level change during operation. Signals which are already in the blocking distance when the device is switched on, are ignored.

This behavior is only valid if the following two conditions are met:
- Expert → Sensor → Echo tracking → Evaluation mode = **Short time history** or **Long time history**
- Expert → Sensor → Gas phase compensation → GPC mode= **On**, **Without correction** or **External correction**

If one of these conditions is not met, signals in the blocking distance will always be ignored.

A different behavior for signals in the blocking distance can be defined in the **Blocking distance evaluation mode** parameter.

If required, a different behavior for signals in the blocking distance can be defined by the Endress+Hauser service.

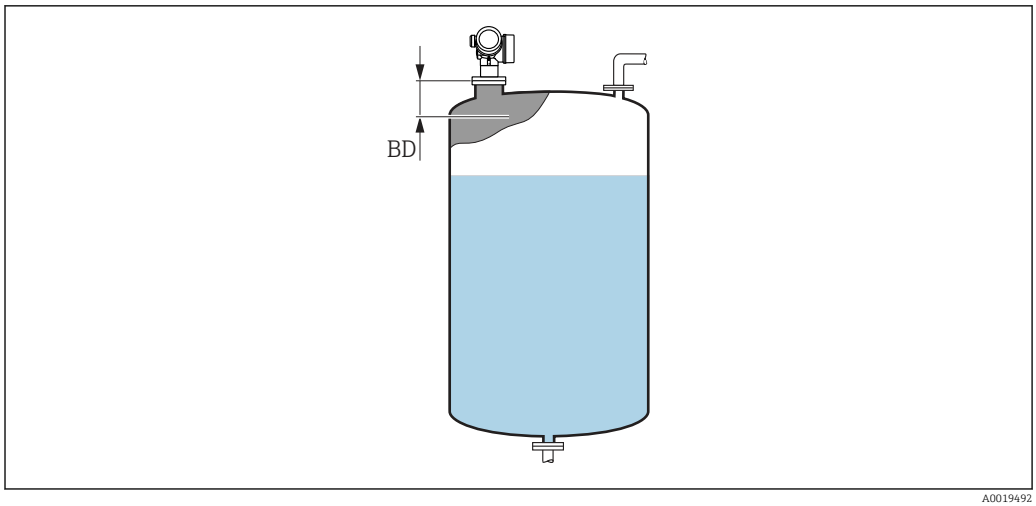

36 Blocking distance (BD) for liquid measurements

Level correction

Navigation Setup → Advanced setup → Level → Level correction

Description Specify level correction (if required).

User entry −200 000.0 to 200 000.0 %

Factory setting 0.0 %

Additional information The value specified in this parameter is added to the measured level (before linearization).

Tank/silo height

Navigation Setup → Advanced setup → Level → Tank/silo height

Description Specify total height of the tank or silo as measured from the process connection.

User entry −999.9999 to 999.9999 m

Factory setting **Empty calibration (→ 131)**

Additional information If the parametrized measuring range (**Empty calibration (→ 131)**) differs significantly from the tank or silo height, it is recommended to enter the tank or silo height. Example: Continuous level monitoring in the upper third of a tank or silo.

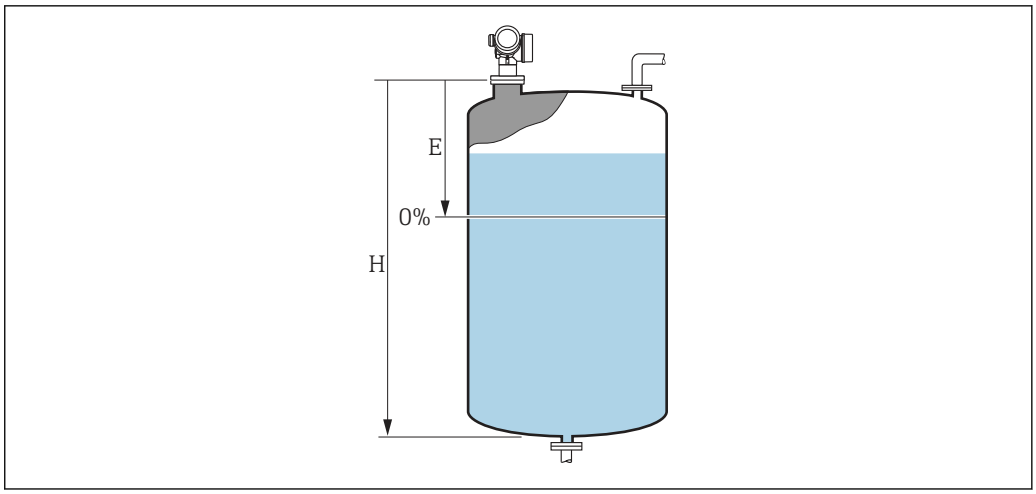

37 *"Tank/silo height" parameter (→ 146)' for measurements in liquids*

E Empty calibration (→ 131)
H Tank/silo height (→ 146)

For tanks with conical outlet, **Tank/silo height** should not be changed as in this type of applications **Empty calibration (→ 131)** is usually **not** << the tank or silo height.

"Linearization" submenu

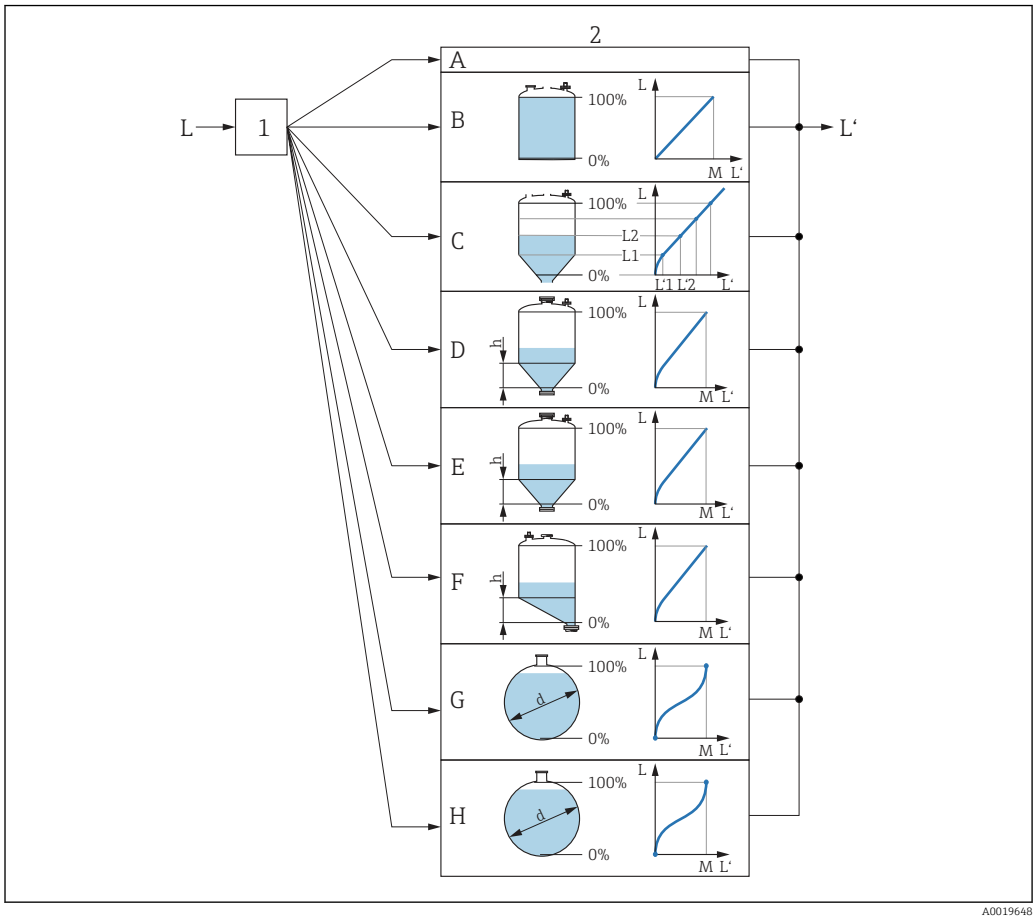

38 *Linearization: Transformation of the level and (if relevant) the interface height into a volume or weight; the transformation is dependent on the shape of the vessel.*

1 Selection of linearization type and unit
2 Configuration of the linearization
A Linearization type (→ 151) = None
B Linearization type (→ 151) = Linear
C Linearization type (→ 151) = Table
D Linearization type (→ 151) = Pyramid bottom
E Linearization type (→ 151) = Conical bottom
F Linearization type (→ 151) = Angled bottom
G Linearization type (→ 151) = Horizontal cylinder
H Linearization type (→ 151) = Sphere
L Level before linearization (measured in distance units)
L' Level linearized (→ 153) (corresponds to volume or weight)
M Maximum value (→ 154)
d Diameter (→ 154)
h Intermediate height (→ 154)

Structure of the submenu on the display module

Navigation Setup → Advanced setup → Linearization

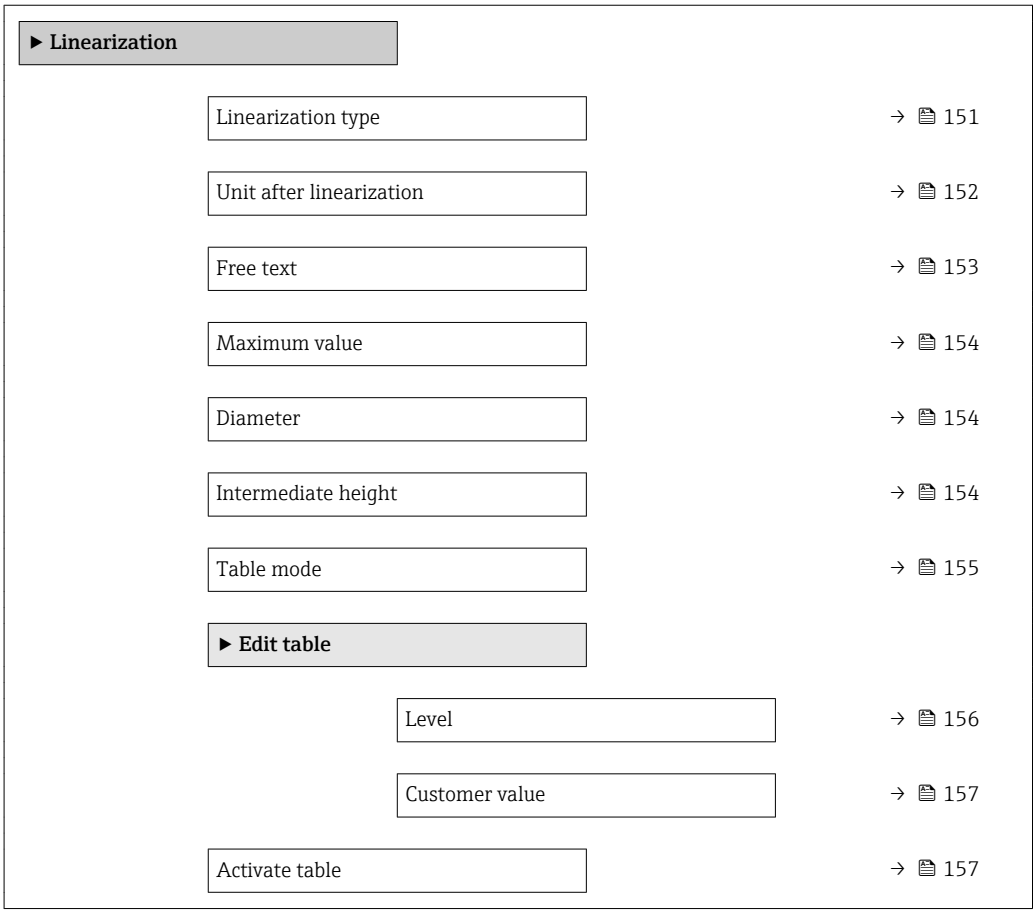

Structure of the submenu in an operating tool (e.g. FieldCare)

Navigation Setup → Advanced setup → Linearization

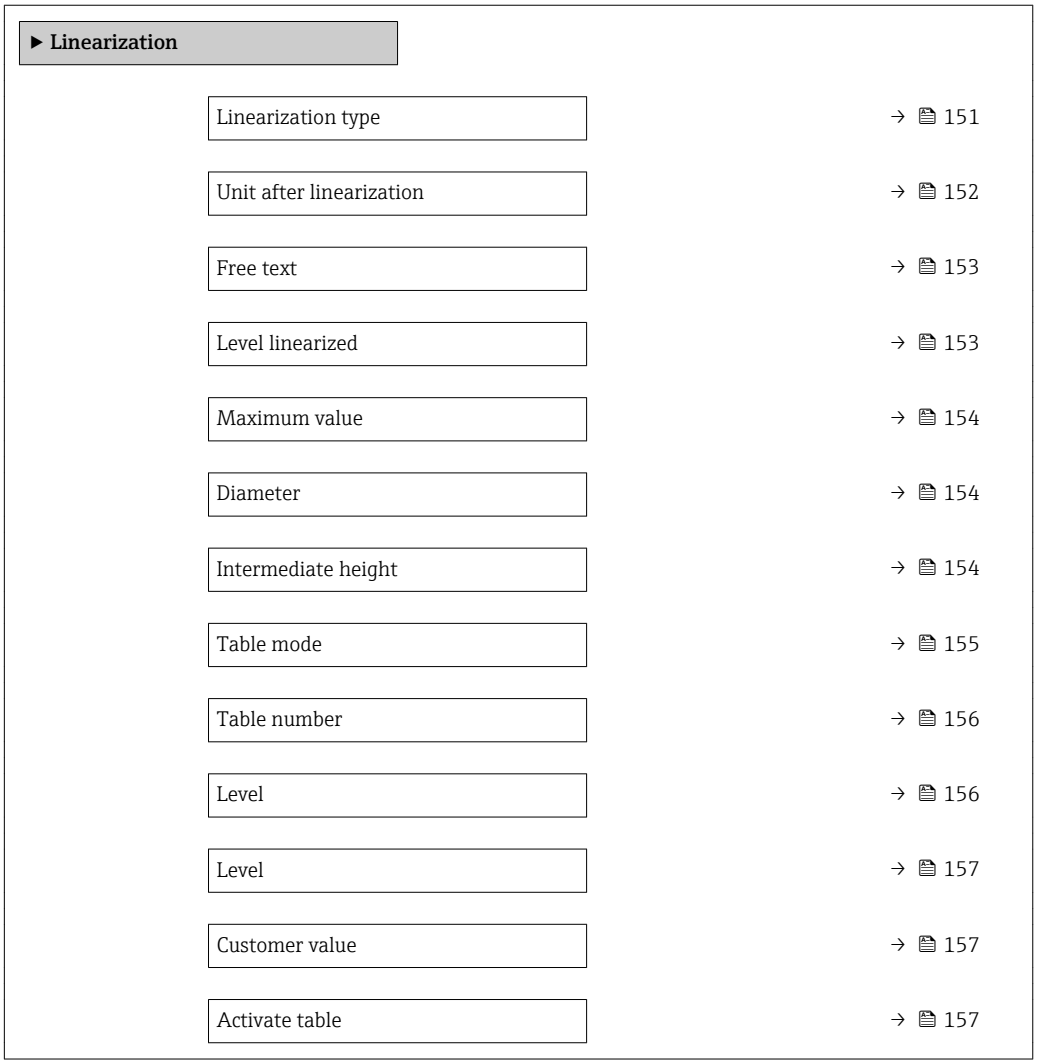

Description of parameters

Navigation Setup → Advanced setup → Linearization

Linearization type

Navigation Setup → Advanced setup → Linearization → Linearization type

Description Select linearization type.

Selection
- None
- Linear
- Table
- Pyramid bottom
- Conical bottom
- Angled bottom
- Horizontal cylinder
- Sphere

Factory setting None

Additional information

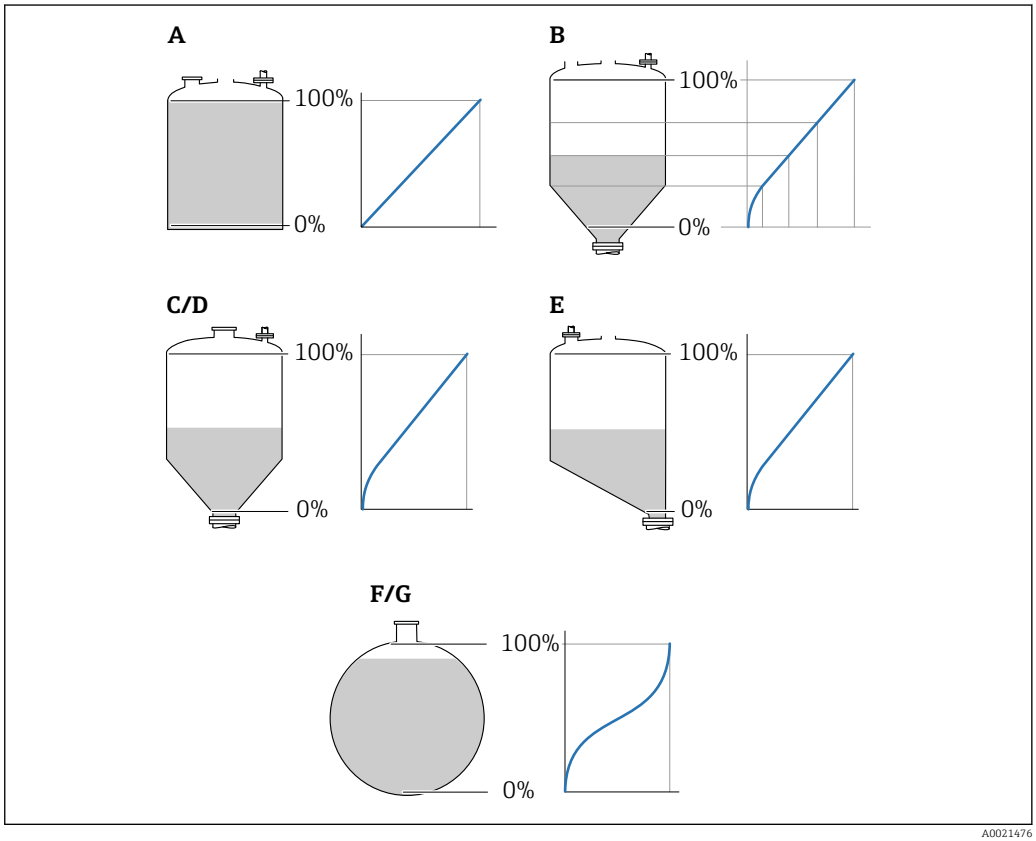

39 *Linearization types*

A None
B Table
C Pyramid bottom
D Conical bottom
E Angled bottom
F Sphere
G Horizontal cylinder

Meaning of the options

- **None**
  The level is transmitted in the level unit without linearization.
- **Linear**
  The output value (volume/weight) is directly proportional to the level L. This is valid, for example, for vertical cylinders. The following additional parameters have to be specified:
  – **Unit after linearization (→ 152)**
  – **Maximum value (→ 154)**: Maximum volume or weight
- **Table**
  The relationship between the measured level L and the output value (volume/weight) is given by a linearization table consisting of up to 32 pairs of values "level - volume" or "level - weight", respectively. The following additional parameters have to be specified:
  – **Unit after linearization (→ 152)**
  – **Table mode (→ 155)**
  – For each table point: **Level (→ 156)**
  – For each table point: **Customer value (→ 157)**
  – **Activate table (→ 157)**
- **Pyramid bottom**
  The output value corresponds to the volume or weight in a silo with pyramid bottom. The following additional parameters have to be specified:
  – **Unit after linearization (→ 152)**
  – **Maximum value (→ 154)**: Maximum volume or weight
  – **Intermediate height (→ 154)**: The height of the pyramid
- **Conical bottom**
  The output value corresponds to the volume or weight in a tank with conical bottom. The following additional parameters have to be specified:
  – **Unit after linearization (→ 152)**
  – **Maximum value (→ 154)**: Maximum volume or weight
  – **Intermediate height (→ 154)**: The height of the conical part of the tank
- **Angled bottom**
  The output value corresponds to the volume or weight in a silo with an angled bottom. The following additional parameters have to be specified:
  – **Unit after linearization (→ 152)**
  – **Maximum value (→ 154)**: Maximum volume or weight
  – **Intermediate height (→ 154)**: Height of the angled bottom
- **Horizontal cylinder**
  The output value corresponds to the volume or weight in a horizontal cylinder. The following additional parameters have to be specified:
  – **Unit after linearization (→ 152)**
  – **Maximum value (→ 154)**: Maximum volume or weight
  – **Diameter (→ 154)**
- **Sphere**
  The output value corresponds to the volume or weight in a spherical tank. The following additional parameters have to be specified:
  – **Unit after linearization (→ 152)**
  – **Maximum value (→ 154)**: Maximum volume or weight
  – **Diameter (→ 154)**

Unit after linearization

Navigation Setup → Advanced setup → Linearization → Unit after linearization

Prerequisite **Linearization type (→ 151)** ≠ None

Description Select unit of the lineaized value.

Selection

SI units
- STon
- t
- kg
- cm^3
- dm^3
- m^3
- hl
- l
- %

US units
- lb
- UsGal
- ft^3

Imperial units
impGal

Custom-specific units
Free text

Factory setting

%

Additional information

The selected unit is only used to be indicated on the display. The measured value is **not** transformed according to the selected unit.

It is also possible to configure a distance-to-distance linearization, i.e. a transformation from the level unit to a different distance unit. To do so, select the **Linear** linearization mode. In order to define the new level unit, select the **Free text** option in the **Unit after linearization** parameter and enter the required unit into the **Free text** parameter (→ 153).

Free text

Navigation

Setup → Advanced setup → Linearization → Free text

Prerequisite

Unit after linearization (→ 152) = Free text

Description

Enter unit symbol.

User entry

Up to 32 alphanumerical characters (letters, numbers, special characters)

Factory setting

Free text

Level linearized

Navigation

Setup → Advanced setup → Linearization → Level linearized

Description

Displays linearized level.

Additional information

The unit is defined by the **Unit after linearization** parameter → 152.

Maximum value

Navigation Setup → Advanced setup → Linearization → Maximum value

Prerequisite **Linearization type (→ 151)** has one of the following values:
- Linear
- Pyramid bottom
- Conical bottom
- Angled bottom
- Horizontal cylinder
- Sphere

User entry −50 000.0 to 50 000.0 %

Factory setting 100.0 %

Diameter

Navigation Setup → Advanced setup → Linearization → Diameter

Prerequisite **Linearization type (→ 151)** has one of the following values:
- Horizontal cylinder
- Sphere

User entry 0 to 9 999.999 m

Factory setting 2 m

Additional information The unit is defined in the **Distance unit** parameter (→ 130).

Intermediate height

Navigation Setup → Advanced setup → Linearization → Intermediate height

Prerequisite **Linearization type (→ 151)** has one of the following values:
- Pyramid bottom
- Conical bottom
- Angled bottom

User entry 0 to 200 m

Factory setting 0 m

Additional information

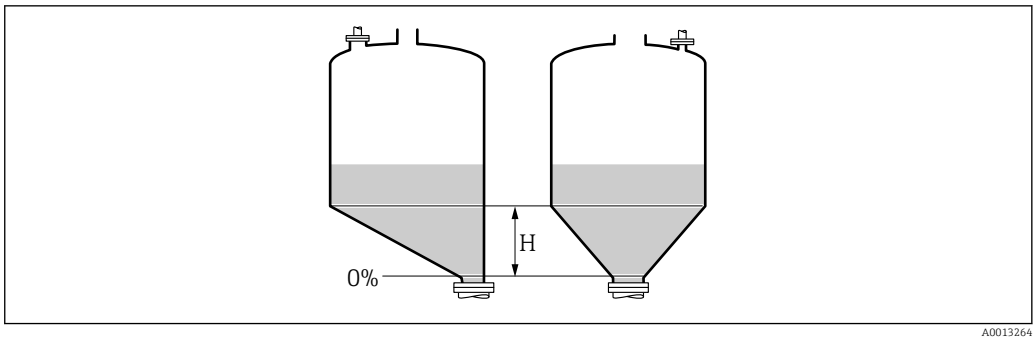

H Intermediate height

The unit is defined in the **Distance unit** parameter (→ 130).

Table mode

Navigation Setup → Advanced setup → Linearization → Table mode

Prerequisite **Linearization type (→ 151) = Table**

Description Select editing mode of the linearization table.

Selection
- Manual
- Semiautomatic *
- Clear table
- Sort table

Factory setting Manual

Additional information

Meaning of the options
- **Manual**
  The level and the associated linearized value are entered manually for each linearization point.
- **Semiautomatic**
  The level is measured by the device for each linearization point. The associated linearized value is entered manually.
- **Clear table**
  Deletes the existing linearization table.
- **Sort table**
  Rearranges the linerization points into an ascending order.

* Visibility depends on order options or device settings

Conditions the linearization table must meet:
- The table may consist of up to 32 pairs of values "Level - Linearized Value".
- The table must be monotonic (monotonically increasing or decreasing).
- The first linearization point must refer to the minimum level.
- The last linearization point must refer to the maximum level.

Before entering a linearization table, the values for **Empty calibration (→ 131)** and **Full calibration (→ 132)** must be set correctly.

If values of the table need to be changed after the full or empty calibration have been changed, a correct evaluation is only ensured if the existing table is deleted and the complete table is entered again. To do so delete the existing table (**Table mode (→ 155)** = **Clear table**). Then enter a new table.

How to enter the table
- Via FieldCare
  The table points can be entered via the **Table number (→ 156)**, **Level (→ 156)** and **Customer value (→ 157)** parameters. As an alternative, the graphic table editor may be used: Device Operation → Device Functions → Additional Functions → Linearization (Online/Offline)
- Via local display
  Select the **Edit table** submenu to call up the graphic table editor. The table is displayed and can be edited line by line.

The factory setting for the level unit is "%". If you want to enter the linearization table in physical units, you must select the appropriate unit in the **Level unit** parameter (→ 145) beforehand.

Table number

Navigation Setup → Advanced setup → Linearization → Table number

Prerequisite **Linearization type (→ 151)** = **Table**

Description Select table point you are going to enter or change.

User entry 1 to 32

Factory setting 1

Level (Manual)

Navigation Setup → Advanced setup → Linearization → Level

Prerequisite
- **Linearization type (→ 151)** = Table
- **Table mode (→ 155)** = Manual

Description Enter level value of the table point (value before linearization).

User entry Signed floating-point number

Factory setting 0 %

Level (Semiautomatic)

Navigation Setup → Advanced setup → Linearization → Level

Prerequisite
- **Linearization type (→ 151)** = **Table**
- **Table mode (→ 155)** = **Semiautomatic**

Description Displays measured level (value before linearization). This value is transmitted to the table.

Customer value

Navigation Setup → Advanced setup → Linearization → Customer value

Prerequisite **Linearization type (→ 151)** = **Table**

Description Enter linearized value for the table point.

User entry Signed floating-point number

Factory setting 0 %

Activate table

Navigation Setup → Advanced setup → Linearization → Activate table

Prerequisite **Linearization type (→ 151)** = **Table**

Description Activate (enable) or deactivate (disable) the linearization table.

Selection
- Disable
- Enable

Factory setting Disable

Additional information

Meaning of the options
- **Disable**
  The measured level is not linearized.
  If **Linearization type (→ 151)** = **Table** at the same time, the device issues error message F435.
- **Enable**
  The measured level is linearized according to the table.

When editing the table, the **Activate table** parameter is automatically reset to **Disable** and must be reset to **Enable** after the table has been entered.

"Safety settings" submenu

Navigation Setup → Advanced setup → Safety settings

Output echo lost

Navigation Setup → Advanced setup → Safety settings → Output echo lost

Description Output signal in case of a lost echo.

Selection
- Last valid value
- Ramp at echo lost
- Value echo lost
- Alarm

Factory setting Last valid value

Additional information

Meaning of the options
- **Last valid value**
  The last valid value is kept in the case of a lost echo.
- **Ramp at echo lost** [9]
  In the case of a lost echo the output value is continously shifted towards 0% or 100%. The slope of the ramp is defined in the **Ramp at echo lost** parameter (→ 159).
- **Value echo lost** [9]
  In the case of a lost echo the output assumes the value defined in the **Value echo lost** parameter (→ 158).
- **Alarm**
  In the case of a lost echo the device generates an alarm; see the **Failure mode** parameter

Value echo lost

Navigation Setup → Advanced setup → Safety settings → Value echo lost

Prerequisite **Output echo lost (→ 158)** = **Value echo lost**

Description Output value in case of a lost echo

User entry 0 to 200 000.0 %

Factory setting 0.0 %

Additional information Use the unit which has been defined for the measured value output:
- without linearization: **Level unit (→ 145)**
- with linearization: **Unit after linearization (→ 152)**

9) Only visible if "Linearization type (→ 151)" = "None"

Ramp at echo lost

Navigation Setup → Advanced setup → Safety settings → Ramp at echo lost

Prerequisite **Output echo lost (→ 158) = Ramp at echo lost**

Description Slope of the ramp in the case of a lost echo

User entry Signed floating-point number

Factory setting 0.0 %/min

Additional information

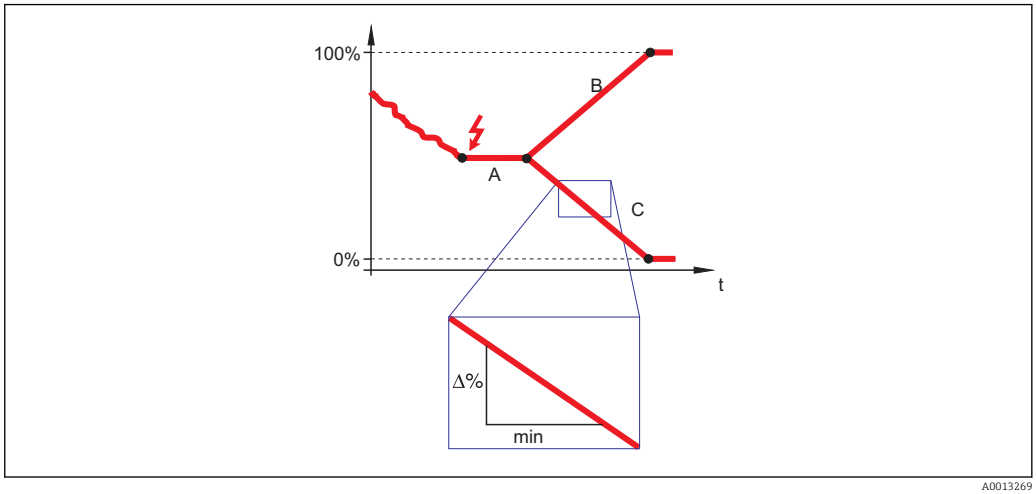

A Delay time echo lost
B Ramp at echo lost (→ 159) (positive value)
C Ramp at echo lost (→ 159) (negative value)

- The unit for the slope of the ramp is "percentage of the measuring range per minute" (%/min).
- For a negative slope of the ramp: The measured value is continuously decreased until it reaches 0%.
- For a positive slope of the ramp: The measured value is continuosly increased until it reaches 100%.

Blocking distance

Navigation Setup → Advanced setup → Safety settings → Blocking distance

Description Specify blocking distance BD.

User entry 0 to 200 m

Factory setting FMR50, FMR51, FMR53, FMR54: antenna length

Additional information Signals in the blocking distance are only evaluated if they have been outside the blocking distance when the device was switched on and move into the blocking distance due to a

level change during operation. Signals which are already in the blocking distance when the device is switched on, are ignored.

This behavior is only valid if the following two conditions are met:
- Expert → Sensor → Echo tracking → Evaluation mode = **Short time history** or **Long time history**
- Expert → Sensor → Gas phase compensation → GPC mode= **On**, **Without correction** or **External correction**

If one of these conditions is not met, signals in the blocking distance will always be ignored.

A different behavior for signals in the blocking distance can be defined in the **Blocking distance evaluation mode** parameter.

If required, a different behavior for signals in the blocking distance can be defined by the Endress+Hauser service.

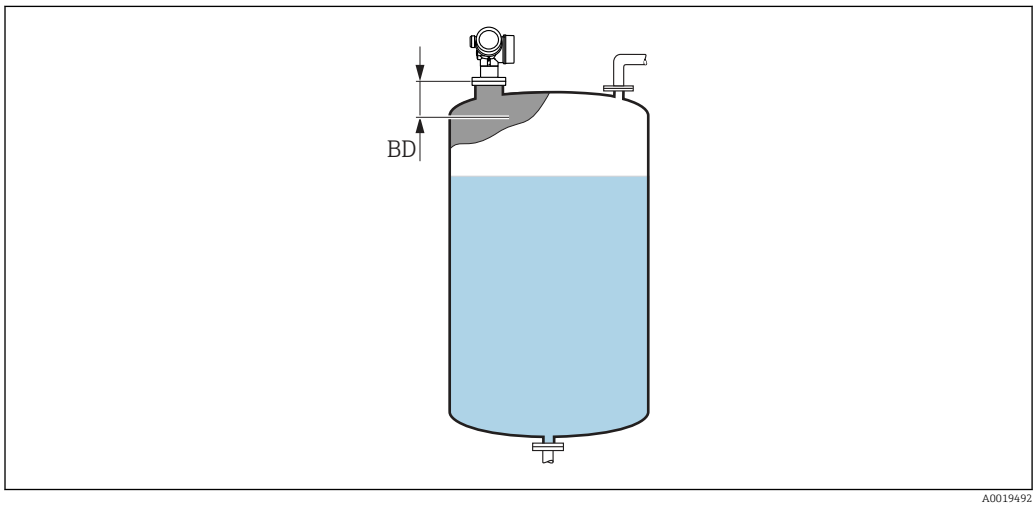

40 Blocking distance (BD) for liquid measurements

"Switch output" submenu

The **Switch output** submenu (→ 161) is only visible for devices with switch output. [10)]

Navigation Setup → Advanced setup → Switch output

Switch output function

Navigation Setup → Advanced setup → Switch output → Switch output function

Description Select function for switch output.

Selection
- Off
- On
- Diagnostic behavior
- Limit
- Digital Output

Factory setting Off

Additional information

Meaning of the options
- **Off**
  The output is always open (non-conductive).
- **On**
  The output is always closed (conductive).
- **Diagnostic behavior**
  The output is normally closed and is only opened if a diagnostic event is present. The **Assign diagnostic behavior** parameter (→ 162) determines for which type of event the output is opened.
- **Limit**
  The output is normally closed and is only opened if a measured variable exceeds or falls below a defined limit. The limit values are defined by the following parameters:
  – **Assign limit (→ 162)**
  – **Switch-on value (→ 163)**
  – **Switch-off value (→ 164)**
- **Digital Output**
  The switching state of the output tracks the output value of a DI function block. The function block is selected in the **Assign status** parameter (→ 161).

The **Off** and **On** options can be used to simulate the switch output.

Assign status

Navigation Setup → Advanced setup → Switch output → Assign status

Prerequisite **Switch output function (→ 161)** = **Digital Output**

Description Select device status for switch output.

10) Ordering feature 020 "Power supply; Output", option B, E or G

Selection
- Off
- Digital output AD 1
- Digital output AD 2
- Digital output 1
- Digital output 2
- Digital output 3
- Digital output 4
- Digital output 5
- Digital output 6
- Digital output 7
- Digital output 8

Factory setting Off

Additional information The **Digital output AD 1** and **Digital output AD 2** options refer to the Advanced Diagnostic Blocks. A switch signal generated in these blocks can be transmitted via the switch output.

Assign limit

Navigation Setup → Advanced setup → Switch output → Assign limit

Prerequisite **Switch output function (→ 161)** = **Limit**

Selection
- Off
- Level linearized
- Distance
- Terminal voltage
- Electronic temperature
- Relative echo amplitude
- Area of incoupling

Factory setting Off

Assign diagnostic behavior

Navigation Setup → Advanced setup → Switch output → Assign diagnostic behavior

Prerequisite **Switch output function (→ 161)** = **Diagnostic behavior**

Description Select diagnostic behavior for switch output.

Selection
- Alarm
- Alarm or warning
- Warning

Factory setting Alarm

Switch-on value

Navigation Setup → Advanced setup → Switch output → Switch-on value

Prerequisite **Switch output function (→ 161) = Limit**

Description Enter measured value for the switch-on point.

User entry Signed floating-point number

Factory setting 0

Additional information The switching behavior depends on the relative position of the **Switch-on value** and **Switch-off value** parameters:

Switch-on value > Switch-off value
- The output is closed if the measured value is larger than **Switch-on value**.
- The output is opened if the measured value is smaller than **Switch-off value**.

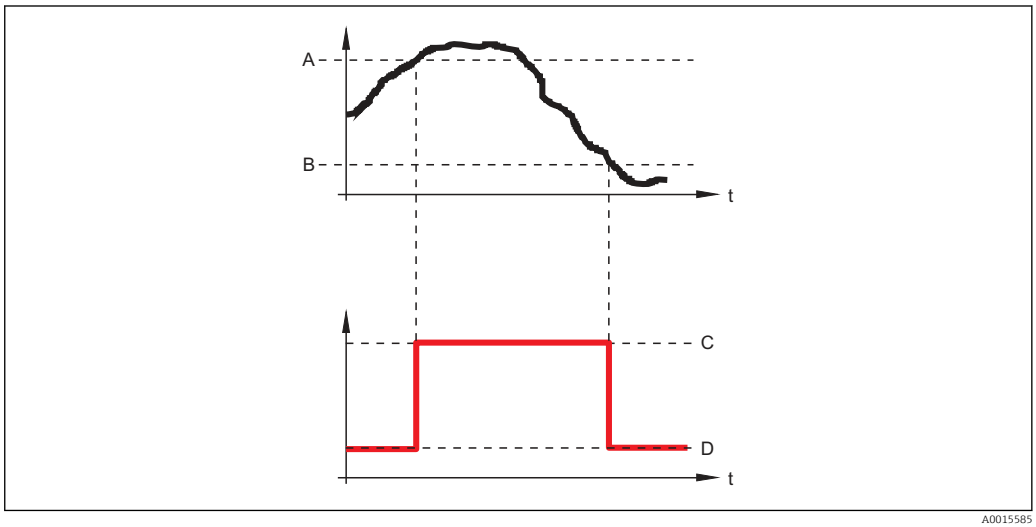

A Switch-on value
B Switch-off value
C Output closed (conductive)
D Output opened (non-conductive)

Switch-on value < Switch-off value
- The output is closed if the measured value is smaller than **Switch-on value**.
- The output is opened if the measured value is larger than **Switch-off value**.

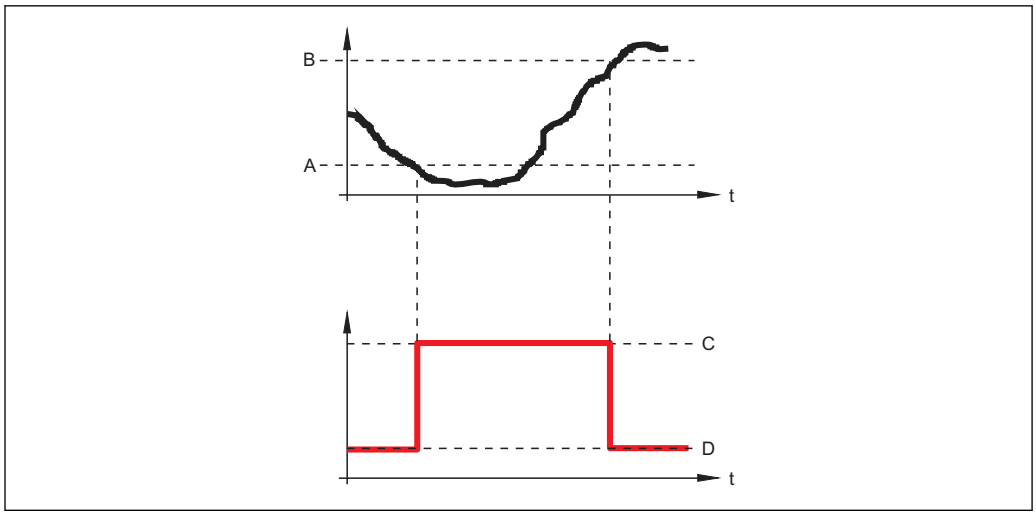

A Switch-on value
B Switch-off value
C Output closed (conductive)
D Output opened (non-conductive)

Switch-on delay

Navigation Setup → Advanced setup → Switch output → Switch-on delay

Prerequisite
- **Switch output function (→ 161) = Limit**
- **Assign limit (→ 162) ≠ Off**

Description Define delay for the switch-on of status output.

User entry 0.0 to 100.0 s

Factory setting 0.0 s

Switch-off value

Navigation Setup → Advanced setup → Switch output → Switch-off value

Prerequisite **Switch output function (→ 161) = Limit**

Description Enter measured value for the switch-off point.

User entry Signed floating-point number

Factory setting 0

Additional information The switching behavior depends on the relative position of the **Switch-on value** and **Switch-off value** parameters; description: see the **Switch-on value** parameter (→ 163).

Switch-off delay

Navigation Setup → Advanced setup → Switch output → Switch-off delay

Prerequisite
- **Switch output function (→ 161)** = **Limit**
- **Assign limit (→ 162)** ≠ **Off**

Description Define delay for the switch-off of status output.

User entry 0.0 to 100.0 s

Factory setting 0.0 s

Failure mode

Navigation Setup → Advanced setup → Switch output → Failure mode

Prerequisite **Switch output function (→ 161)** = **Limit** or **Digital Output**

Description Define output behavior in alarm condition.

Selection
- Actual status
- Open
- Closed

Factory setting Open

Additional information

Switch status

Navigation Setup → Advanced setup → Switch output → Switch status

Description Shows the current switch output status.

Invert output signal

Navigation Setup → Advanced setup → Switch output → Invert output signal

Description Invert the output signal.

Selection
- No
- Yes

Factory setting No

Additional information

Meaning of the options

- **No**
  The behavior of the switch output is as described above.
- **Yes**
  The states **Open** and **Closed** are inverted as compared to the description above.

"Display" submenu

The **Display** submenu is only visible if a display module is connected to the device.

Navigation Setup → Advanced setup → Display

Language

Navigation Setup → Advanced setup → Display → Language

Description Set display language.

Selection
- English
- Deutsch *
- Français *
- Español *
- Italiano *
- Nederlands *
- Portuguesa *
- Polski *
- русский язык (Russian) *
- Svenska *
- Türkçe *
- 中文 (Chinese) *
- 日本語 (Japanese) *
- 한국어 (Korean) *
- Bahasa Indonesia *
- tiếng Việt (Vietnamese) *
- čeština (Czech) *

Factory setting The language selected in feature 500 of the product structure.
If no language has been selected: **English**

Additional information

Format display

Navigation Setup → Advanced setup → Display → Format display

Description Select how measured values are shown on the display.

Selection
- 1 value, max. size
- 1 bargraph + 1 value
- 2 values
- 1 value large + 2 values
- 4 values

Factory setting 1 value, max. size

* Visibility depends on order options or device settings

Additional information

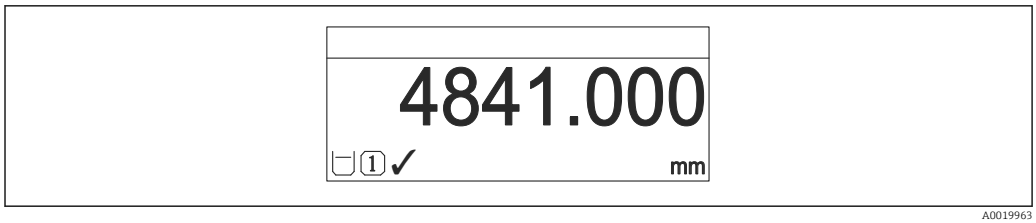

41 *"Format display" = "1 value, max. size"*

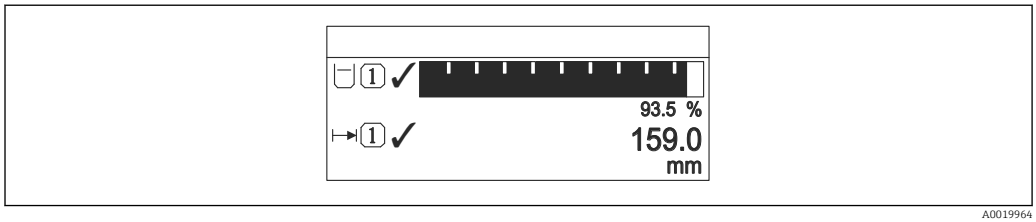

42 *"Format display" = "1 bargraph + 1 value"*

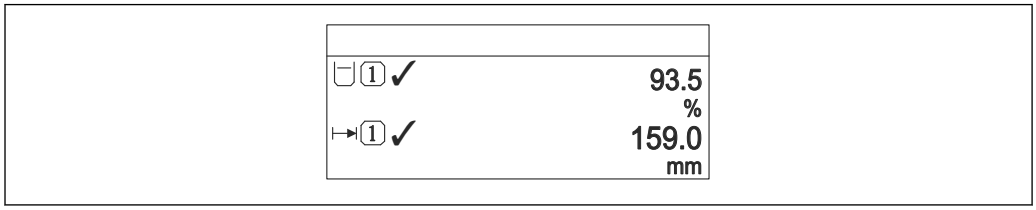

43 *"Format display" = "2 values"*

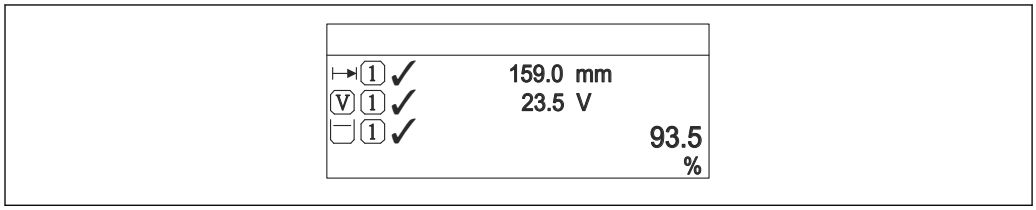

44 *"Format display" = "1 value large + 2 values"*

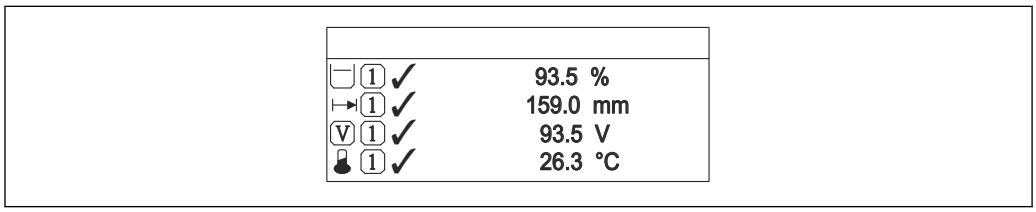

45 *"Format display" = "4 values"*

- The **Value 1 to 4 display** → 169 parameters specify which measured values are shown on the display and in which order.
- If more measured values are specified than the current display mode permits, the values alternate on the device display. The display time until the next change is configured in the **Display interval** parameter (→ 170).

Value 1 to 4 display

Navigation Setup → Advanced setup → Display → Value 1 display

Description Select the measured value that is shown on the local display.

Selection
- Level linearized
- Distance
- Terminal voltage
- Electronic temperature
- Absolute echo amplitude
- Relative echo amplitude
- Analog output adv. diagnostics 1
- Analog output adv. diagnostics 2
- Analog output 1
- Analog output 2
- Analog output 3
- Analog output 4
- Analog output 5
- Analog output 6
- Analog output 7
- Analog output 8
- Area of incoupling

Factory setting
- Value 1 display: Level linearized
- Value 2 display: None
- Value 3 display: None
- Value 4 display: None

Decimal places 1 to 4

Navigation Setup → Advanced setup → Display → Decimal places 1

Description Select the number of decimal places for the display value.

Selection
- x
- x.x
- x.xx
- x.xxx
- x.xxxx

Factory setting x.xx

Additional information The setting does not affect the measuring or computational accuracy of the device.

Display interval

Navigation Setup → Advanced setup → Display → Display interval

Description Set time measured values are shown on display if display alternates between values.

User entry 1 to 10 s

Factory setting 5 s

Additional information This parameter is only relevant if the number of selected measuring values exceeds the number of values the selected display format can display simultaneously.

Display damping

Navigation Setup → Advanced setup → Display → Display damping

Description Set display reaction time to fluctuations in the measured value.

User entry 0.0 to 999.9 s

Factory setting 0.0 s

Header

Navigation Setup → Advanced setup → Display → Header

Description Select header contents on local display.

Selection
- Device tag
- Free text

Factory setting Device tag

Additional information

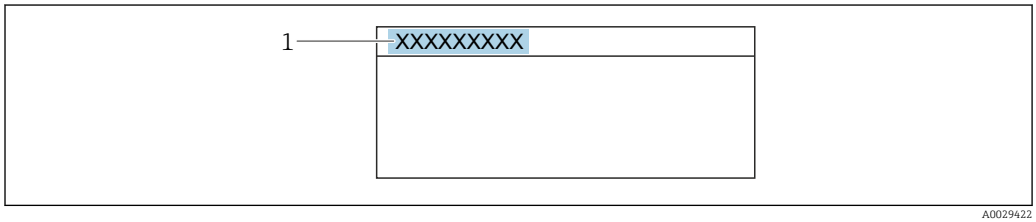

1 Position of the header text on the display

Meaning of the options

- **Device tag**
  Is defined in the **Device tag** parameter
- **Free text**
  Is defined in the **Header text** parameter (→ 171)

Header text

Navigation Setup → Advanced setup → Display → Header text

Prerequisite **Header (→ 170) = Free text**

Description Enter display header text.

Factory setting ----------

Additional information The number of characters which can be displayed depends on the characters used.

Separator

Navigation Setup → Advanced setup → Display → Separator

Description Select decimal separator for displaying numerical values.

Selection
- .
- ,

Factory setting .

Number format

Navigation Setup → Advanced setup → Display → Number format

Description Choose number format for the display.

Selection
- Decimal
- ft-in-1/16"

Factory setting Decimal

Additional information The **ft-in-1/16"** option is only valid for distance units.

Decimal places menu

Navigation Setup → Advanced setup → Display → Decimal places menu

Description Select number of decimal places for the representation of numbers within the operating menu.

Selection
- x
- x.x
- x.xx
- x.xxx
- x.xxxx

Factory setting
x.xxxx

Additional information
- Is only valid for numbers in the operating menu (e.g. **Empty calibration**, **Full calibration**), but not for the measured value display. The number of decimal places for the measured value display is defined in the **Decimal places 1 to 4** → 169 parameters.
- The setting does not affect the accuracy of the measurement or the calculations.

Backlight

Navigation
Setup → Advanced setup → Display → Backlight

Prerequisite
The device has the SD03 local display (with optical keys).

Description
Switch the local display backlight on and off.

Selection
- Disable
- Enable

Factory setting
Disable

Additional information
Meaning of the options
- **Disable**
  Switches the backlight off.
- **Enable**
  Switches the backlight on.

Regardless of the setting in this parameter the backlight may be automatically switched off by the device if the supply voltage is too low.

Contrast display

Navigation
Setup → Advanced setup → Display → Contrast display

Description
Adjust local display contrast setting to ambient conditions (e.g. lighting or reading angle).

User entry
20 to 80 %

Factory setting
Dependent on the display.

Additional information
Setting the contrast via push-buttons:
- Darker: press the ⊖ E buttons simultaneously.
- Brighter: press the ⊕ E buttons simultaneously.

"Configuration backup display" submenu

This submenu is only visible if a display module is connected to the device.

The configuration of the device can be saved to the display module at a certain point of time (backup). The saved configurateion can be restored to the device if required, e.g. in order to bring the device back into a defined state. The configuration can also be transferred to a different device of the same type using the display module.

Navigation Setup → Advanced setup → Configuration backup display

Operating time

Navigation Setup → Advanced setup → Configuration backup display → Operating time

Description Indicates how long the device has been in operation.

Additional information *Maximum time*

9 999 d (≈ 27 years)

Last backup

Navigation Setup → Advanced setup → Configuration backup display → Last backup

Description Indicates when the last data backup was saved to the display module.

Configuration management

Navigation Setup → Advanced setup → Configuration backup display → Configuration management

Description Select action for managing the device data in the display module.

Selection
- Cancel
- Execute backup
- Restore
- Duplicate
- Compare
- Clear backup data
- Display incompatible

Factory setting Cancel

Additional information

Meaning of the options

- **Cancel**
  No action is executed and the user exits the parameter.
- **Execute backup**
  A backup copy of the current device configuration in the HistoROM (built-in in the device) is saved to the display module of the device.
- **Restore**
  The last backup copy of the device configuration is copied from the display module to the HistoROM of the device.
- **Duplicate**
  The transmitter configuration is duplicated to another device using the transmitter display module. The following parameters, which characterize the individual measuring point are **not** included in the transmitted configuration:
  Medium type
- **Compare**
  The device configuration saved in the display module is compared to the current device configuration of the HistoROM. The result of this comparison is displayed in the **Comparison result** parameter (→ 174).
- **Clear backup data**
  The backup copy of the device configuration is deleted from the display module of the device.

While this action is in progress, the configuration cannot be edited via the local display and a message on the processing status appears on the display.

If an existing backup is restored to a different device using the **Restore** option, it may occur that some device functionalities are no longer available. In some cases even a device reset will not restore the original status.

In order to transmit a configuration to a different device, the **Duplicate** option should always be used.

Backup state

Navigation Setup → Advanced setup → Configuration backup display → Backup state

Description Displays which backup action is currently in progress.

Comparison result

Navigation Setup → Advanced setup → Configuration backup display → Comparison result

Description Comparison between present device data and display backup.

Additional information

Meaning of the display options

- **Settings identical**
  The current device configuration of the HistoROM is identical to the backup copy in the display module.
- **Settings not identical**
  The current device configuration of the HistoROM is not identical to the backup copy in the display module.
- **No backup available**
  There is no backup copy of the device configuration of the HistoROM in the display module.
- **Backup settings corrupt**
  The current device configuration of the HistoROM is corrupt or not compatible with the backup copy in the display module.
- **Check not done**
  The device configuration of the HistoROM has not yet been compared to the backup copy in the display module.
- **Dataset incompatible**
  The data sets are incompatible and can not be compared.

To start the comparison, set **Configuration management (→ 173)** = **Compare**.

If the transmitter configuration has been duplicated from a different device by **Configuration management (→ 173)** = **Duplicate**, the new device configuration in the HistoROM is only partially identical to the configuration stored in the display module: Sensor specific properties (e.g. the mapping curve) are not duplicated. Thus, the result of the comparison will be **Settings not identical**.

"Administration" submenu

Navigation Setup → Advanced setup → Administration

Define access code

Navigation Setup → Advanced setup → Administration → Define access code

Description Define release code for write access to parameters.

User entry 0 to 9 999

Factory setting 0

Additional information

If the factory setting is not changed or 0 is defined as the access code, the parameters are not write-protected and the configuration data of the device can then always be modified. The user is logged on in the *Maintenance* role.

The write protection affects all parameters marked with the symbol in this document. On the local display, the symbol in front of a parameter indicates that the parameter is write-protected.

Once the access code has been defined, write-protected parameters can only be modified if the access code is entered in the **Enter access code** parameter (→ 141).

Please contact your Endress+Hauser Sales Center if you lose your access code.

For display operation: The new access code is only valid after it has been confirmed in the **Confirm access code** parameter (→ 178).

Device reset

Navigation Setup → Advanced setup → Administration → Device reset

Setup → Advanced setup → Administration → Device reset

Selection

- Cancel
- To fieldbus defaults
- To factory defaults
- To delivery settings
- Of customer settings
- To transducer defaults
- Restart device

Factory setting Cancel

Additional information

Meaning of the options

- **Cancel**
  No action
- **To factory defaults**
  All parameters are reset to the order-code specific factory setting.
- **To delivery settings**
  All parameters are reset to the delivery setting. The delivery setting may differ from the factory default if customer specific settings have been ordered.
  This option is only visible if customer specific settings have been ordered.
- **Of customer settings**
  All customer parameters are reset to their factory setting. Service parameters, however, remain unchanged.
- **To transducer defaults**
  Every measurment-related parameter is reset to its factory setting. Service parameters and communication-related parameters, however, remain unchanged.
- **Restart device**
  The restart resets every parameter which is stored in the volatile memory (RAM) to the factory setting (e.g. measured value data). The device configuration remains unchanged.

"Define access code" wizard

The **Define access code** wizard is only available when operating via the local display. When operating via an operating tool, the **Define access code** parameter is located directly in the **Administration** submenu. The **Confirm access code** parameter is not available for operation via operating tool.

Navigation Setup → Advanced setup → Administration → Define access code

Define access code

Navigation Setup → Advanced setup → Administration → Define access code → Define access code

Description → 176

Confirm access code

Navigation Setup → Advanced setup → Administration → Define access code → Confirm access code

Description Confirm the entered access code.

User entry 0 to 9 999

Factory setting 0

17.4 "Diagnostics" menu

Navigation Diagnostics

Actual diagnostics

Navigation Diagnostics → Actual diagnostics

Description Displays current diagnostic message.

Additional information The display consists of:
- Symbol for event behavior
- Code for diagnostic behavior
- Operating time of occurrence
- Event text

If several messages are active at the same time, the messages with the highest priority is displayed.

Information on what is causing the message, and remedy measures, can be viewed via the ⓘ symbol on the display.

Timestamp

Navigation Diagnostics → Timestamp

Previous diagnostics

Navigation Diagnostics → Previous diagnostics

Description Displays the last diagnostic message which has been active before the current message.

Additional information The display consists of:
- Symbol for event behavior
- Code for diagnostic behavior
- Operating time of occurrence
- Event text

The condition displayed may still apply. Information on what is causing the message, and remedy measures, can be viewed via the ⓘ symbol on the display.

Timestamp

Navigation Diagnostics → Timestamp

Operating time from restart

Navigation Diagnostics → Operating time from restart

Description Displays the time the device has been in operation since the last device restart.

Operating time

Navigation Diagnostics → Operating time

Description Indicates how long the device has been in operation.

Additional information *Maximum time*
9 999 d (≈ 27 years)

17.4.1 "Diagnostic list" submenu

Navigation Diagnostics → Diagnostic list

Diagnostics 1 to 5

Navigation Diagnostics → Diagnostic list → Diagnostics 1

Description Display the current diagnostics messages with the highest to fifth-highest priority.

Additional information The display consists of:
- Symbol for event behavior
- Code for diagnostic behavior
- Operating time of occurrence
- Event text

Timestamp 1 to 5

Navigation Diagnostics → Diagnostic list → Timestamp

17.4.2 "Event logbook" submenu

The **Event logbook** submenu is only available when operating via the local display. When operating via FieldCare, the event list can be displayed in the FieldCare function "Event List / HistoROM".

Navigation Diagnostics → Event logbook

Filter options

Navigation Diagnostics → Event logbook → Filter options

Selection
- All
- Failure (F)
- Function check (C)
- Out of specification (S)
- Maintenance required (M)
- Information (I)

Factory setting All

Additional information
- This parameter is only used for operation via the local display.
- The status signals are categorized according to NAMUR NE 107.

"Event list" submenu

The **Event list** submenu displays the history of past events of the category selected in the **Filter options** parameter (→ 182). A maximum of 100 events are displayed in chronological order.

The following symbols indicate whether an event has occurred or has ended:
- : Event has occurred
- : Event has ended

Information on what is causing the message, and remedy instructions, can be viewed via the -button.

Display format
- For event messages in category I: information event, event text, "recording event" symbol and time the event occurred
- For event messages in category F, M, C, S (status signal): diagnostics event, event text, "recording event" symbol and time the event occurred

Navigation Diagnostics → Event logbook → Event list

17.4.3 "Device information" submenu

Navigation Diagnostics → Device information

Device tag

Navigation
Diagnostics → Device information → Device tag
Diagnostics → Device information → Device tag

Description
Enter tag for measuring point.

Factory setting
FMP5x

Serial number

Navigation
Diagnostics → Device information → Serial number
Diagnostics → Device information → Serial number

Additional information
Uses of the serial number
- To identify the device quickly, e.g. when contacting Endress+Hauser.
- To obtain specific information on the device using the Device Viewer: www.endress.com/deviceviewer

The serial number is also indicated on the nameplate.

Firmware version

Navigation
Diagnostics → Device information → Firmware version
Diagnostics → Device information → Firmware version

User interface
xx.yy.zz

Additional information
For firmware versions differing only in the last two digits ("zz") there is no difference concerning functionality or operation.

Device name

Navigation
- Diagnostics → Device information → Device name
- Diagnostics → Device information → Device name

Order code

Navigation
- Diagnostics → Device information → Order code
- Diagnostics → Device information → Order code

Additional information The order code is generated from the extended roder code, which defines all device features of the product structure. In contrast, the device features can not be read directly from the order code.

Extended order code 1 to 3

Navigation
- Diagnostics → Device information → Extended order code 1
- Diagnostics → Device information → Extended order code 1

Description Display the three parts of the extended order code.

Additional information The extended order code indicates the version of all the features of the product structure and thus uniquely identifies the device.

17.4.4 "Measured values" submenu

Navigation Diagnostics → Measured values

Distance

Navigation Diagnostics → Measured values → Distance

Description Displays the measured distance D between the reference point (lower edge of the flange or threaded connection) and the level.

Additional information

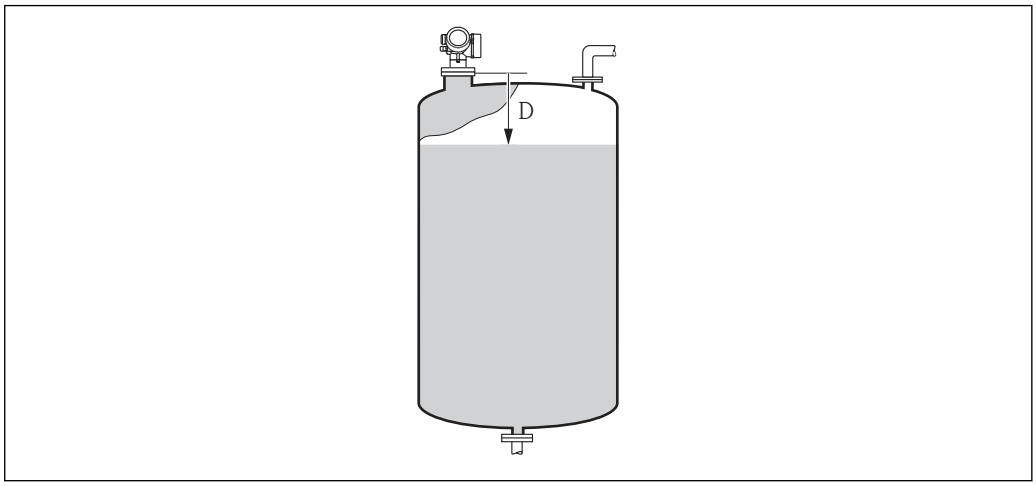

46 *Distance for liquid measurements*

The unit is defined in the **Distance unit** parameter (→ 130).

Level linearized

Navigation Diagnostics → Measured values → Level linearized

Description Displays linearized level.

Additional information The unit is defined by the **Unit after linearization** parameter → 152.

Terminal voltage 1

Navigation Diagnostics → Measured values → Terminal voltage 1

Electronic temperature

Navigation Diagnostics → Measured values → Electronic temperature

Description Displays the current temperature of the electronics.

Additional information The unit is defined in the **Temperature unit** parameter.

17.4.5 "Analog input 1 to 5" submenu

There is an **Analog inputs** submenu for every AI block of the device. The AI block is used to configure the measured value transmission to the bus.

Only the most basic properties of the AI block can be configured in this submenu. For a detailed configuration of the AI blocks refer to the **Expert** menu.

Navigation Diagnostics → Analog inputs → Analog input 1 to 5

Block tag

Navigation Diagnostics → Analog inputs → Analog input 1 to 5 → Block tag

Description Defined to be unique throughout the control system at one plant site. The tag may be changed using the FB_Tag service.

Factory setting

Channel

Navigation Diagnostics → Analog inputs → Analog input 1 to 5 → Channel

Description Use this function to select the input value that should be processed in the Analog Input function block.

Selection
- Uninitialized
- Level linearized
- Absolute echo amplitude
- Distance
- Electronic temperature

- Relative echo amplitude
- Analog output adv. diagnostics 1
- Analog output adv. diagnostics 2
- Terminal voltage

Factory setting Uninitialized

Status

Navigation Diagnostics → Analog inputs → Analog input 1 to 5 → Status

Description Indicates the status of the output of the AI block according to the FOUNDATION Fieldbus specification.

Value

Navigation Diagnostics → Analog inputs → Analog input 1 to 5 → Value

Description Indicates the output value of the AI block.

Units index

Navigation Diagnostics → Analog inputs → Analog input 1 to 5 → Units index

Description Indicates the unit of the output value.

17.4.6 "Data logging" submenu

Navigation Diagnostics → Data logging

Assign channel 1 to 4

Navigation Diagnostics → Data logging → Assign channel 1 to 4

Selection
- Off
- Level linearized
- Distance
- Terminal voltage
- Electronic temperature
- Absolute echo amplitude
- Relative echo amplitude
- Analog output adv. diagnostics 1
- Analog output adv. diagnostics 2

Factory setting Off

Additional information A total of 1000 measured values can be logged. This means:
- 1000 data points if 1 logging channel is used
- 500 data points if 2 logging channels are used
- 333 data points if 3 logging channels are used
- 250 data points if 4 logging channels are used

If the maximum number of data points is reached, the oldest data points in the data log are cyclically overwritten in such a way that the last 1000, 500, 333 or 250 measured values are always in the log (ring memory principle).

The logged data are deleted if a new option is selected in this parameter.

Logging interval

Navigation Diagnostics → Data logging → Logging interval

User entry 1.0 to 3 600.0 s

Factory setting 30.0 s

Additional information This parameter defines the interval between the individual data points in the data log, and thus the maximum loggable process time T_{log}:
- If 1 logging channel is used: $T_{log} = 1000 \cdot t_{log}$
- If 2 logging channels are used: $T_{log} = 500 \cdot t_{log}$
- If 3 logging channels are used: $T_{log} = 333 \cdot t_{log}$
- If 4 logging channels are used: $T_{log} = 250 \cdot t_{log}$

Once this time elapses, the oldest data points in the data log are cyclically overwritten such that a time of T_{log} always remains in the memory (ring memory principle).

The logged data are deleted if this parameter is changed.

Example

When using 1 logging channel
- $T_{log} = 1000 \cdot 1\ s = 1\,000\ s \approx 16.5\ min$
- $T_{log} = 1000 \cdot 10\ s = 1\,000\ s \approx 2.75\ h$
- $T_{log} = 1000 \cdot 80\ s = 80\,000\ s \approx 22\ h$
- $T_{log} = 1000 \cdot 3\,600\ s = 3\,600\,000\ s \approx 41\ d$

Clear logging data

Navigation Diagnostics → Data logging → Clear logging data

Selection
- Cancel
- Clear data

Factory setting Cancel

"Display channel 1 to 4" submenu

The **Display channel 1 to 4** submenus are only available for operation via the local display. When operating via FieldCare, the logging diagram can be displayed in the FieldCare function "Event List / HistoROM" .

The **Display channel 1 to 4** submenus invoke a diagram of the logging history of the respective channel.

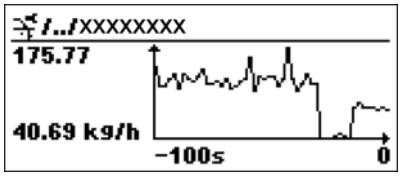

- x-axis: depending on the number of selected channels, 250 to 1000 measured values of a process variable are displayed.
- y-axis: covers the approximate measured value span and constantly adapts this to the measurement.

To return to the operating menu, press ⊞ and ⊟ simultaneaously.

Navigation Diagnostics → Data logging → Display channel 1 to 4

17.4.7 "Simulation" submenu

The **Simulation** submenu is used to simulate specific measuring values or other conditions. This helps to check the correct configuration of the device and connected control units.

Conditions which can be simulated

Condition to be simulated	Associated parameters
Specific value of a process variable	▪ Assign measurement variable (→ 194) ▪ Value process variable (→ 194)
Specific state of the switch output	▪ Switch output simulation (→ 194) ▪ Switch status (→ 195)
Existence of an alarm	Simulation device alarm (→ 195)
Existence of a specific diagnostic message	▪ Diagnostic event category (→ 195) (when operated via local display) ▪ Simulation diagnostic event (→ 196)

Enable/disable simulation

The simulation of measured values can be enabled or disabled via a hardware switch (SIM switch) at the electronics. Simulating a measured value is only possible if the SIM switch is in the ON position.

The switch output can always be simulated, irrespective of the position of the SIM switch.

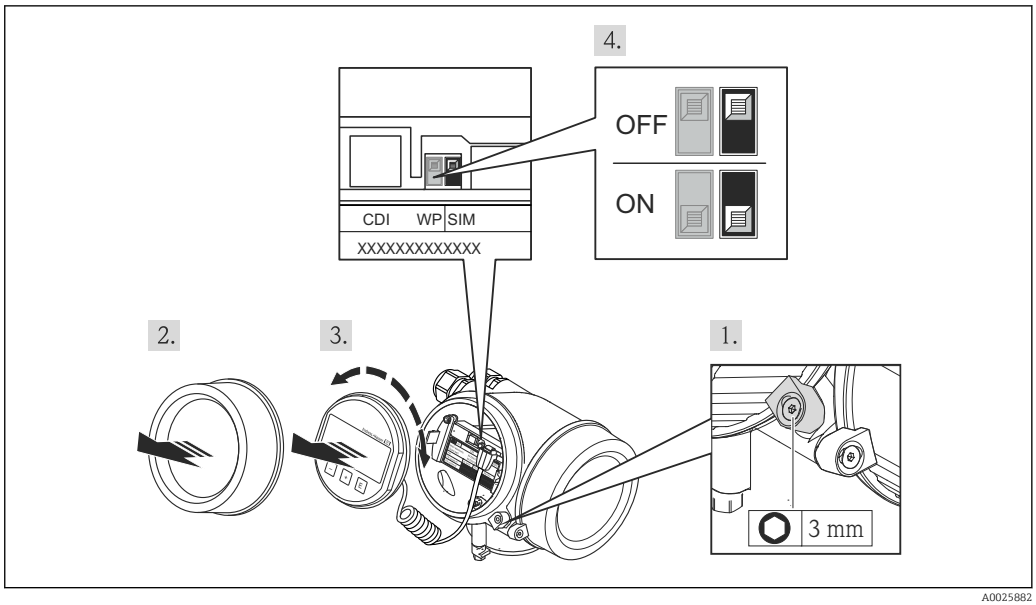

A0025882

1. Loosen the securing clamp.
2. Unscrew the housing cover.

3. Pull out the display module with a gentle rotation movement. To make it easier to access the SIM switch, attach the display module to the edge of the electronics compartment.
   ↳ Display module is attached to the edge of the electronics compartment.

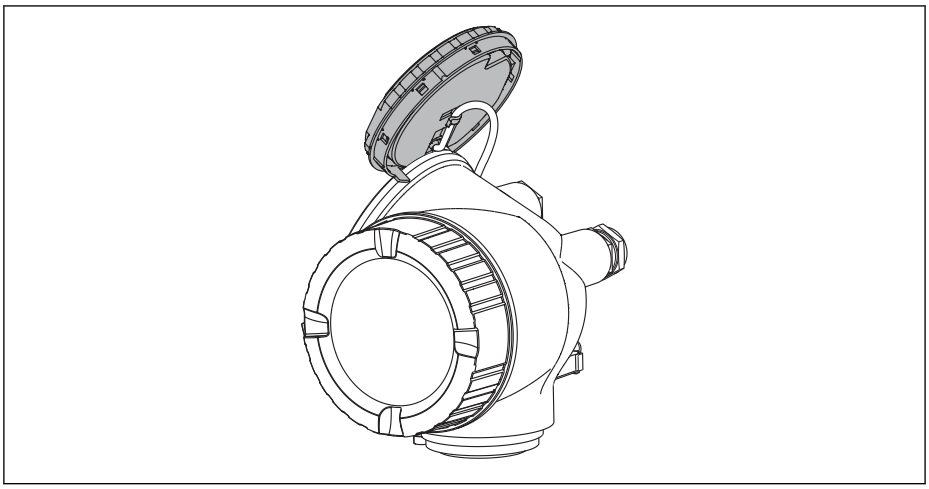

A0013909

4. SIM switch in the **ON** position: measured values can be simulated. SIM switch in the **OFF** position (factory setting): Simulation of measured values is disabled.
5. Feed the spiral cable into the gap between the housing and main electronics module and plug the display module into the electronics compartment in the desired direction until it engages.
6. Screw the electronics compartment cover closed and tighten the securing clamp.

Structure of the submenu

Navigation Expert → Diagnostics → Simulation

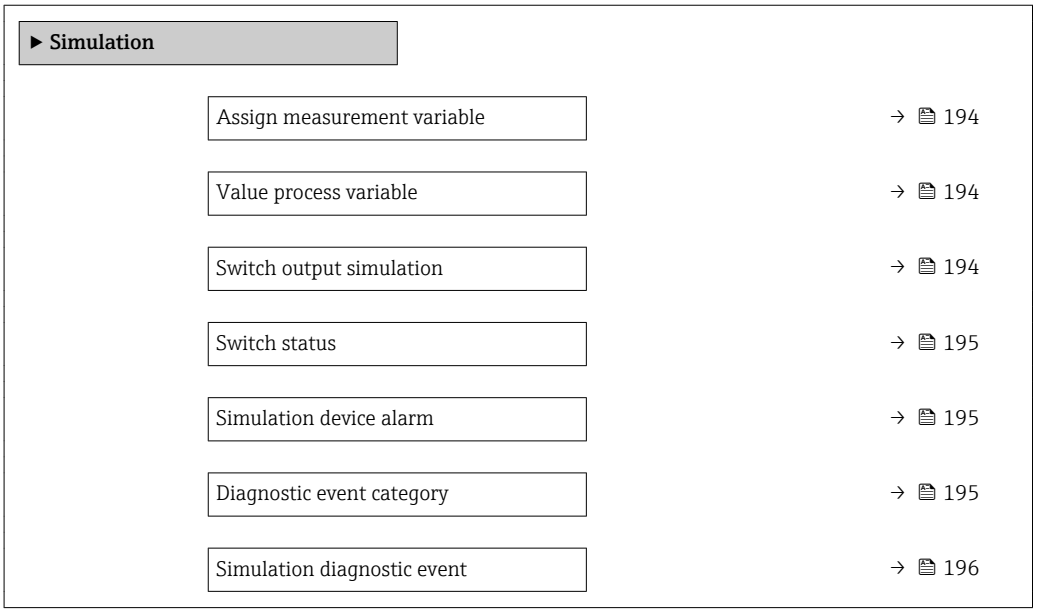

Description of parameters

Navigation Expert → Diagnostics → Simulation

Assign measurement variable

Navigation Expert → Diagnostics → Simulation → Assign measurement variable

Selection
- Off
- Level
- Level linearized

Factory setting Off

Additional information
- The value of the variable to be simulated is defined in the **Value process variable** parameter (→ 194).
- If **Assign measurement variable ≠ Off**, a simulation is active. This is indicated by a diagnotic message of the *Function check (C)* category.

Value process variable

Navigation Expert → Diagnostics → Simulation → Value process variable

Prerequisite **Assign measurement variable (→ 194) ≠ Off**

User entry Signed floating-point number

Factory setting 0

Additional information Downstream measured value processing and the signal output use this simulation value. In this way, users can verify whether the measuring device has been configured correctly.

Switch output simulation

Navigation Expert → Diagnostics → Simulation → Switch output simulation

Description Switch the simulation of the switch output on and off.

Selection
- Off
- On

Factory setting Off

Switch status

Navigation Expert → Diagnostics → Simulation → Switch status

Prerequisite **Switch output simulation (→ 194) = On**

Description Select the status of the status output for the simulation.

Selection
- Open
- Closed

Factory setting Open

Additional information The switch status assumes the value defined in this parameter. This helps to check correct operation of connected control units.

Simulation device alarm

Navigation Expert → Diagnostics → Simulation → Simulation device alarm

Description Switch the device alarm on and off.

Selection
- Off
- On

Factory setting Off

Additional information When selecting the **On** option, the device generates an alarm. This helps to check the correct output behavior of the device in the case of an alarm.

An active simulation is indicated by the diagnostic message **C484 Simulation failure mode**.

Diagnostic event category

Navigation Expert → Diagnostics → Simulation → Diagnostic event category

Prerequisite **Access status display (→ 140)/Access status tooling (→ 140) = Service**

Description Select event category for the simulation.

Selection
- Sensor
- Electronics
- Configuration
- Process

Factory setting Process

Additional information Only events of the selected category are available in the selcetion list of the **Simulation diagnostic event** parameter (→ 196).

When operated via tool, all diagnostic messages are always available in **Simulation diagnostic event**. Therefore, **Diagnostic event category** appears only on the local display.

Simulation diagnostic event

Navigation Expert → Diagnostics → Simulation → Simulation diagnostic event

Description Select a diagnostic event for the simulation process that is activated.

Factory setting Off

Additional information When operated via the local display, the selection list can be filtered according to the event categories (**Diagnostic event category** parameter (→ 195)).

17.4.8 "Device check" submenu

Navigation Diagnostics → Device check

Start device check

Navigation Diagnostics → Device check → Start device check

Description Start a device check.

Selection
- No
- Yes

Factory setting No

Additional information In the case of a lost echo a device check can not be performed.

Result device check

Navigation Diagnostics → Device check → Result device check

Description Displays the result of the device check.

Additional information

Meaning of the display options
- **Installation ok**
  Measurement possible without restrictions.
- **Accuracy reduced**
  A measurement is possible. However, the measuring accuracy may be reduced due to the signal amplitudes.
- **Measurement capability reduced**
  A measurement is currently possible. Howerver, there is the risk of an echo loss. Check the mounting position of the device and the dielectric constant of the medium.
- **Check not done**
  No device check has been performed.

Last check time

Navigation Diagnostics → Device check → Last check time

Description Displays the operating time at which the last device check has been performed.

Level signal

Navigation Diagnostics → Device check → Level signal

Prerequisite Device check has been performed.

Description Displays result of the device check for the level signal.

User interface
- Check not done
- Check not OK
- Check OK

Additional information For **Level signal** = **Check not OK**: Check the mounting position of the device and the dielectric constant of the medium.

17.4.9 "Heartbeat" submenu

The **Heartbeat** submenu is only available via **FieldCare** or **DeviceCare**. It contains the wizards which are part of the **Heartbeat Verification** and **Heartbeat Monitoring** application packages.

Detailed description
SD01871F

Navigation Diagnostics → Heartbeat

Index

A

Access authorization to parameters
- Read access . . . 51
- Write access . . . 51

Access code . . . 51
- Incorrect input . . . 51

Access status display (Parameter) . . . 140
Access status tooling (Parameter) . . . 140
Accessories
- Communication specific . . . 117
- Service specific . . . 117

Activate table (Parameter) . . . 157
Actual diagnostics (Parameter) . . . 179
Administration (Submenu) . . . 176
Advanced process conditions (Parameter) . . . 144
Advanced setup (Submenu) . . . 140
Analog input 1 to 5 (Submenu) . . . 138, 186
Application . . . 11
- Residual risk . . . 11

Assign channel 1 to 4 (Parameter) . . . 188
Assign diagnostic behavior (Parameter) . . . 162
Assign limit (Parameter) . . . 162
Assign measurement variable (Parameter) . . . 194
Assign status (Parameter) . . . 161

B

Backlight (Parameter) . . . 172
Backup state (Parameter) . . . 174
Block tag (Parameter) . . . 138, 186
Blocking distance (Parameter) . . . 145, 159

C

CE mark . . . 12
Channel (Parameter) . . . 138, 186
Cleaning . . . 109
Clear logging data (Parameter) . . . 189
Comparison result (Parameter) . . . 174
Configuration backup display (Submenu) . . . 173
Configuration management (Parameter) . . . 173
Configuration of a level measurement . . . 78, 87
Confirm access code (Parameter) . . . 178
Confirm distance (Parameter) . . . 134, 137
Context menu . . . 62
Contrast display (Parameter) . . . 172
Customer value (Parameter) . . . 157

D

Data logging (Submenu) . . . 188
Decimal places 1 (Parameter) . . . 169
Decimal places menu (Parameter) . . . 171
Declaration of Conformity . . . 12
Define access code . . . 51
Define access code (Parameter) . . . 176, 178
Define access code (Wizard) . . . 178
Designated use . . . 11
Device check (Submenu) . . . 197
Device information (Submenu) . . . 183
Device name (Parameter) . . . 184
Device replacement . . . 110
Device reset (Parameter) . . . 176
Device tag (Parameter) . . . 183
Diagnostic event
- In the operating tool . . . 103

Diagnostic event category (Parameter) . . . 195
Diagnostic events . . . 100
Diagnostic list . . . 104
Diagnostic list (Submenu) . . . 181
Diagnostic message . . . 100
Diagnostics
- Symbols . . . 100

Diagnostics (Menu) . . . 179
Diagnostics 1 (Parameter) . . . 181
Diagnostics event . . . 101
Diameter (Parameter) . . . 154
DIP switch
- see Write protection switch

Disable simulation . . . 191
Display (Submenu) . . . 167
Display and operating module FHX50 . . . 47
Display channel 1 to 4 (Submenu) . . . 190
Display damping (Parameter) . . . 170
Display interval (Parameter) . . . 170
Display module . . . 56
Display symbols for submenus . . . 57
Display symbols for the locking state . . . 57
Disposal . . . 111
Distance (Parameter) . . . 133, 137, 185
Distance unit (Parameter) . . . 130
Document
- Function . . . 6

Document function . . . 6

E

Electronic temperature (Parameter) . . . 186
Electronics housing
- Design . . . 17

Empty calibration (Parameter) . . . 131
Enable simulation . . . 191
Enter access code (Parameter) . . . 141
Envelope curve display . . . 63
Event history . . . 106
Event level
- Explanation . . . 100
- Symbols . . . 100

Event list (Submenu) . . . 182
Event logbook (Submenu) . . . 182
Event text . . . 101
Events list . . . 106
Extended order code 1 (Parameter) . . . 184
Exterior cleaning . . . 109

F
Failure mode (Parameter) 165
FHX50 47
Filter options (Parameter) 182
Filtering the event logbook 107
Firmware version (Parameter) 183
Format display (Parameter) 167
Free text (Parameter) 153
Full calibration (Parameter) 132

H
Hardware write protection 52
Header (Parameter) 170
Header text (Parameter) 171
Heartbeat (Submenu) 199
HistoROM (description) 88
Housing
  Design 17
  Turning 34

I
Input mask 60
Intermediate height (Parameter) 154
Invert output signal (Parameter) 165

K
Keypad lock
  Disabling 55
  Switching on 55

L
Language (Parameter) 167
Language selection 86
Last backup (Parameter) 173
Last check time (Parameter) 197
Level (Parameter) 133, 156, 157
Level (Submenu) 142
Level correction (Parameter) 146
Level linearized (Parameter) 153, 185
Level measurement configuration 78, 87
Level signal (Parameter) 198
Level unit (Parameter) 145
Linearization (Submenu) 149, 150, 151
Linearization type (Parameter) 151
Local display 46
  see Diagnostics message
  see In alarm condition
Locking status (Parameter) 140
Logging interval (Parameter) 188

M
Maintenance 109
Manage device configuration 82, 88
Mapping (Wizard) 137
Mapping end point (Parameter) 135, 137
Max. draining speed liquid (Parameter) 143
Max. filling speed liquid (Parameter) 143
Maximum value (Parameter) 154
Measured materials 11
Measured value symbols 58
Measured values (Submenu) 185
Medium group (Parameter) 131
Medium property (Parameter) 142
Medium type (Parameter) 142
Menu
  Diagnostics 179
  Setup 130

N
Number format (Parameter) 171

O
Operating elements
  Diagnostics message 101
Operating module 56
Operating time (Parameter) 173, 180
Operating time from restart (Parameter) 180
Operational safety 12
Order code (Parameter) 184
Output echo lost (Parameter) 158
Overvoltage protection
  General information 41

P
Prepare recording map (Parameter) 137
Present mapping (Parameter) 135
Previous diagnostics (Parameter) 179
Process Value Filter Time (Parameter) 139
Product safety 12

R
Ramp at echo lost (Parameter) 159
Read access 51
Record map (Parameter) 136, 137
Registered trademarks 10
Remedial measures
  Calling up 102
  Closing 102
Remote operation 47
Repair concept 110
Replacing a device 110
Requirements for personnel 11
Result device check (Parameter) 197
Return 111

S
Safety instructions
  Basic 11
Safety Instructions (XA) 13
Safety settings (Submenu) 158
Separator (Parameter) 171
Serial number (Parameter) 183
Service interface (CDI) 48
Setting the operating language 77
Settings
  Manage device configuration 82, 88
  Operating language 77
Setup (Menu) 130
Signal quality (Parameter) 134

SIM switch 191
Simulation (Submenu) 193, 194
Simulation device alarm (Parameter) 195
Simulation diagnostic event (Parameter) 196
Spare parts 111
Nameplate 111
Start device check (Parameter) 197
Status (Parameter) 187
Status signals 57, 100
Submenu
Administration 176
Advanced setup 140
Analog input 1 to 5 . . . . . 138, 186
Configuration backup display 173
Data logging 188
Device check 197
Device information 183
Diagnostic list 181
Display 167
Display channel 1 to 4 190
Event list 182
Event logbook 182
Events list 106
Heartbeat 199
Level 142
Linearization 149, 150, 151
Measured values 185
Safety settings 158
Simulation 193, 194
Switch output 161
Switch output (Submenu) 161
Switch output function (Parameter) 161
Switch output simulation (Parameter) 194
Switch status (Parameter) 165, 195
Switch-off delay (Parameter) 165
Switch-off value (Parameter) 164
Switch-on delay (Parameter) 164
Switch-on value (Parameter) 163
Symbols
For correction 60
In the text and numeric editor 60
System components 117

T

Table mode (Parameter) 155
Table number (Parameter) 156
Tank type (Parameter) 130
Tank/silo height (Parameter) 146
Terminal voltage 1 (Parameter) 186
Timestamp (Parameter) 179, 180, 181
Transmitter
Turning the display 35
Turning the display module 35
Transmitter housing
Turning 34
Trouble shooting 98
Tube diameter (Parameter) 131
Turning the display 35
Turning the display module 35

U

Unit after linearization (Parameter) 152
Units index (Parameter) 187

V

Value (Parameter) 187
Value 1 display (Parameter) 169
Value echo lost (Parameter) 158
Value process variable (Parameter) 194

W

W@M Device Viewer 111
Wizard
Define access code 178
Mapping 137
Workplace safety 12
Write access 51
Write protection
Via access code 51
Via write protection switch 52
Write protection switch 52

Z

Zubehör
Gerätespezifisch 112



www.addresses.endress.com

Endress+Hauser

People for Process Automation