BA00326F/00/EN/15.14
71263407

Valid as of software version:
V 01.01.xx (amplifier)
V 01.01.xx (communication)

Operating Instructions
Micropilot S FMR540
Level-Radar

HART COMMUNICATION PROTOCOL

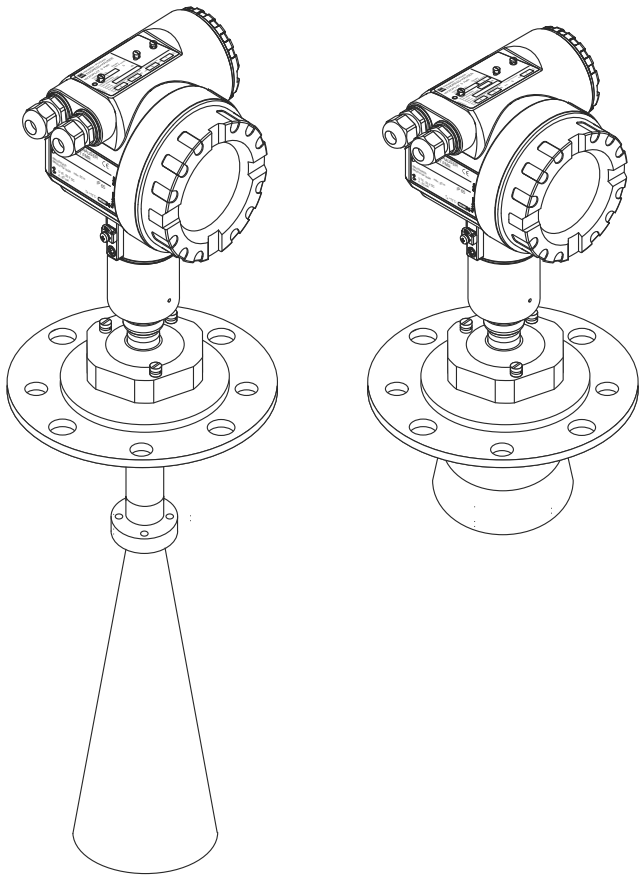

Endress+Hauser
People for Process Automation

Brief operating instructions

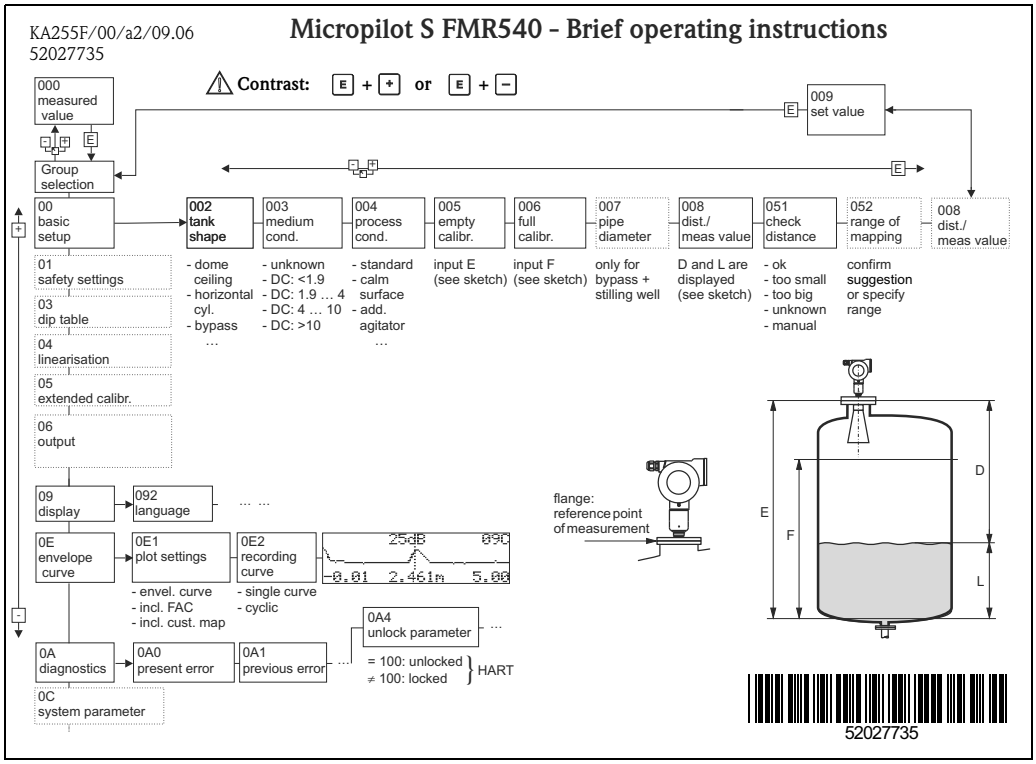

This operating manual explains the installation and initial start-up for the level transmitter. All functions that are required for a typical measuring task are taken into account here. In addition, the Micropilot S provides many other functions that are not included in this operating manual, such as optimising the measuring point and converting the measured values.

An **overview of all device functions** can be found on → 74.

The operating manual BA00341F/00/EN "Description of Instrument Functions" provides an **extensive description of all device functions**, which can be found on the enclosed CD-ROM.

The Operating Instructions can also be found on our homepage: www.endress.com

Table of contents

1 Safety instructions 4
1.1 Designated use 4
1.2 Installation, commissioning and operation 4
1.3 Operational safety and process safety 4
1.4 Notes on safety conventions and symbols 5

2 Identification 7
2.1 Device designation 7
2.2 Scope of delivery 9
2.3 Certificates and approvals 9
2.4 Registered trademarks 9

3 Installation 10
3.1 Quick installation guide 10
3.2 Incoming acceptance, transport, storage 10
3.3 Installation conditions 11
3.4 Installation instructions 15
3.5 Post-installation check 23

4 Wiring 24
4.1 Quick wiring guide 24
4.2 Connecting the measuring unit 26
4.3 Recommended connection 29
4.4 Degree of protection 29
4.5 Post-connection check 29

5 Operation 30
5.1 Quick operation guide 30
5.2 Display and operating elements 32
5.3 Local operation 35
5.4 Display and acknowledging error messages . . . 38
5.5 HART communication 39

6 Commissioning 42
6.1 Function check 42
6.2 Switching on the measuring device 42
6.3 Basic Setup 43
6.4 Basic Setup with the device display VU331 45
6.5 Basic Setup with the Endress+Hauser operating program 57

7 Maintenance 62
7.1 Exterior cleaning 62
7.2 Replacing seals 62
7.3 Repairs 62
7.4 Repairs to Ex-approved devices 62
7.5 Replacement 62

8 Accessories 63
8.1 Weather protection cover 63
8.2 Sensor alignment tool for alignment device . . . 63
8.3 Commubox FXA195 HART 64
8.4 Commubox FXA291 64
8.5 ToF Adapter FXA291 64
8.6 Field Xpert 64

9 Trouble-shooting 65
9.1 Trouble-shooting instructions 65
9.2 System error messages 66
9.3 Application errors 68
9.4 Spare parts 70
9.5 Return 70
9.6 Disposal 71
9.7 Software history 71
9.8 Contact addresses of Endress+Hauser 71

10 Technical data 72
10.1 Additional technical data 72

11 Appendix 74
11.1 Operating menu HART (display modul) 74

Index 78

1 Safety instructions

1.1 Designated use

The Micropilot S is a compact radar level transmitter for the continuous, contactless measurement of predominantly solids. The device can also be freely mounted outside closed metal vessels because of its operating frequency in the K-band and a maximum radiated pulsed energy of 1 mW (average power output 1 µW). Operation is completely harmless to humans and animals.

1.2 Installation, commissioning and operation

The Micropilot S has been designed to operate safely in accordance with current technical, safety and EU standards. If installed incorrectly or used for applications for which it is not intended, however, it is possible that application-related dangers may arise, e.g. product overflow due to incorrect installation or calibration. For this reason, the device must be installed, connected, operated and maintained according to the instructions in this manual: personnel must be authorised and suitably qualified. The manual must have been read and understood, and the instructions followed. Modifications and repairs to the device are permissible only when they are expressly approved in the manual.

1.3 Operational safety and process safety

Alternative monitoring measures must be taken to ensure operational safety and process safety during configuration, testing and maintenance work on the device.

1.3.1 Hazardous areas

Measuring systems for use in hazardous environments are accompanied by separate "Ex documentation", which is an integral part of this Operating Manual. Strict compliance with the installation instructions and ratings as stated in this supplementary documentation is mandatory.

- Ensure that all personnel are suitably qualified.
- Observe the specifications in the certificate as well as national and local regulations.

1.3.2 FCC approval

This device complies with part 15 of the FCC Rules. Operation is subject to the following two conditions:

1. This device may not cause harmful interference, and
2. this device must accept any interference received, including interference that may cause undesired operation.

⚠ CAUTION

Changes or modifications not expressly approved by the part responsible for compliance could void the user's authority to operate the equipment.

1.4 Notes on safety conventions and symbols

In order to highlight safety-relevant or alternative operating procedures in the manual, the following conventions have been used, each indicated by a corresponding symbol in the margin.

1.4.1 Safety symbols

Symbol	Meaning
 A0011189-EN	**DANGER!** This symbol alerts you to a dangerous situation. Failure to avoid this situation will result in serious or fatal injury.
 A0011190-EN	**WARNING!** This symbol alerts you to a dangerous situation. Failure to avoid this situation can result in serious or fatal injury.
 A0011191-EN	**CAUTION!** This symbol alerts you to a dangerous situation. Failure to avoid this situation can result in minor or medium injury.
 A0011192-EN	**NOTICE!** This symbol contains information on procedures and other facts which do not result in personal injury.

1.4.2 Electrical symbols

Symbol	Meaning
 A0018339	**Protective ground connection** A terminal which must be connected to ground prior to establishing any other connections.

1.4.3 Tool symbols

Symbol	Meaning
 A0011221	Allen key

1.4.4 Symbols for certain types of information

Symbol	Meaning
 A0011182	**Allowed** Indicates procedures, processes or actions that are allowed.
 A0011184	**Forbidden** Indicates procedures, processes or actions that are forbidden.
 A0011193	**Tip** Indicates additional information.
 A0015484	**Reference to page** Refers to the corresponding page number.
1. , 2. , 3. ,...	Series of steps

1.4.5 Symbols in graphics

Symbol	Meaning
1, 2, 3, 4, ...	Item numbers
1. , 2. , 3. ,...	Series of steps
A, **B**, **C**, **D**, ...	Views

1.4.6 Symbols at the device

Symbol	Meaning
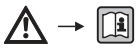 A0019159	**Safety instructions** Observe the safety instructions contained in the associated Operating Instructions.
 A0019221	Temperature resistance of the connection cables Specifies the minimum value of the temperature resistance of the connection cables.

2 Identification

2.1 Device designation

2.1.1 Nameplate

Device nameplate

The following technical data are given on the device nameplate:

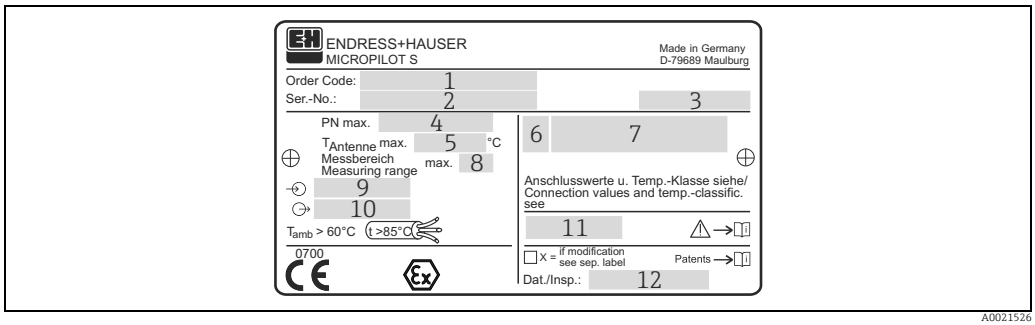

A0021526

1 Order code
2 Serial number
3 Degree of protection e.g. IP65, IP67
4 Max. permissible pressure in tank
5 Max. permissible temperature on the antenna
6 Certificate symbol (optional) e.g. Ex
7 Approval number and type of protection
8 Max. measuring range
9 Power supply
10 Current supply
11 Safety infromation (Connection values and temp.-classific.)
12 Dat.Insp. xx/yy (xx = week of production, yy = year of production)

NMI type plate

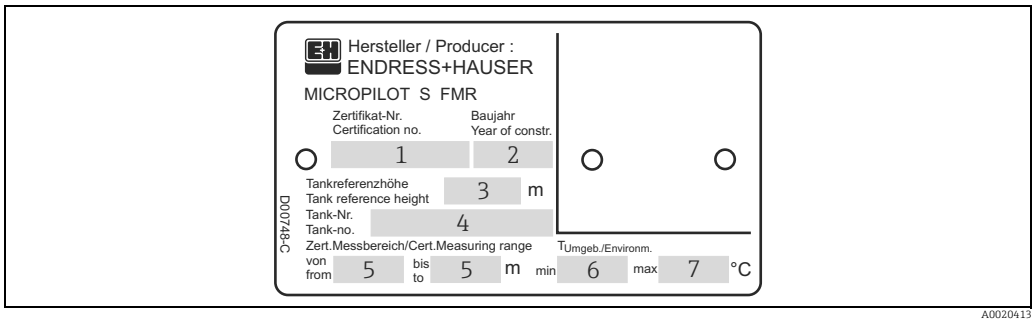

A0020413

Note!
The fields are only filled if in feature "70" "Weight + measures approval" the variant "F" is selected.

1 Certificate number
2 Year of construction
3 Tank reference height
4 Tank number
5 Certificated measuring range from ... to ...
6 Min. environment temperature
7 Max. environment temperature

PTB type plate

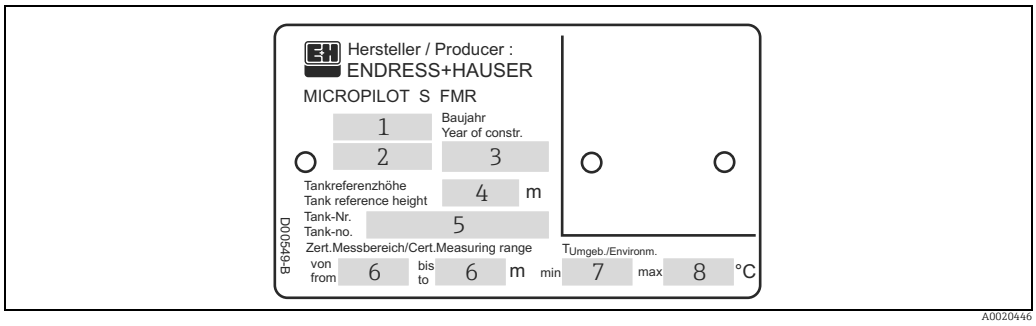

Note!
The fields are only filled if in feature "70" "Weight + measures approval" the variant "G" is selected.

1 Approval number
2 Year and month of type approval
3 Year of construction
4 Tank reference height
5 Tank number
6 Certificated measuring range from ... to ...
7 Min. environment temperature
8 Max. environment temperature

2.2 Scope of delivery

⚠ CAUTION

It is essential to follow the instructions concerning the unpacking, transport and storage of measuring devices given in the chapter "Incoming acceptance, transport, storage", → 10!

The scope of delivery consists of:
- Assembled device
- Accessories (→ 63)
- 2 seals
- Endress+Hauser operating program on the enclosed CD-ROM
- Brief operating instructions KA01059F/00/EN for quick commissioning
- Brief operating instructions KA00255F/00/A2 (basic setup/troubleshooting), housed in the device
- Approval documentation: if this is not included in the operating manual
- CD-ROM with further documentation, e.g.
  - Operating Instructions
  - Description of Instrument Functions

2.3 Certificates and approvals

CE mark, declaration of conformity

The device is designed to meet state-of-the-art safety requirements, has been tested and left the factory in a condition in which it is safe to operate. The device complies with the applicable standards and regulations as listed in the EC declaration of conformity and thus complies with the statutory requirements of the EG directives. Endress+Hauser confirms the successful testing of the device by affixing to it the CE mark.

2.4 Registered trademarks

KALREZ®, VITON®, TEFLON®
Registered trademark of the company, E.I. Du Pont de Nemours & Co., Wilmington, USA

TRI-CLAMP®
Registered trademark of the company, Ladish & Co., Inc., Kenosha, USA

HART®
Registered trademark of HART Communication Foundation, Austin, USA

ToF®
Registered trademark of the company Endress+Hauser GmbH+Co. KG, Maulburg, Germany

PulseMaster®
Registered trademark of the company Endress+Hauser GmbH+Co. KG, Maulburg, Germany

PhaseMaster®
Registered trademark of the company Endress+Hauser GmbH+Co. KG, Maulburg, Germany

FieldCare®
Registered trademark of the Endress+Hauser Process Solutions AG, Reinach, Switzerland

3 Installation

3.1 Quick installation guide

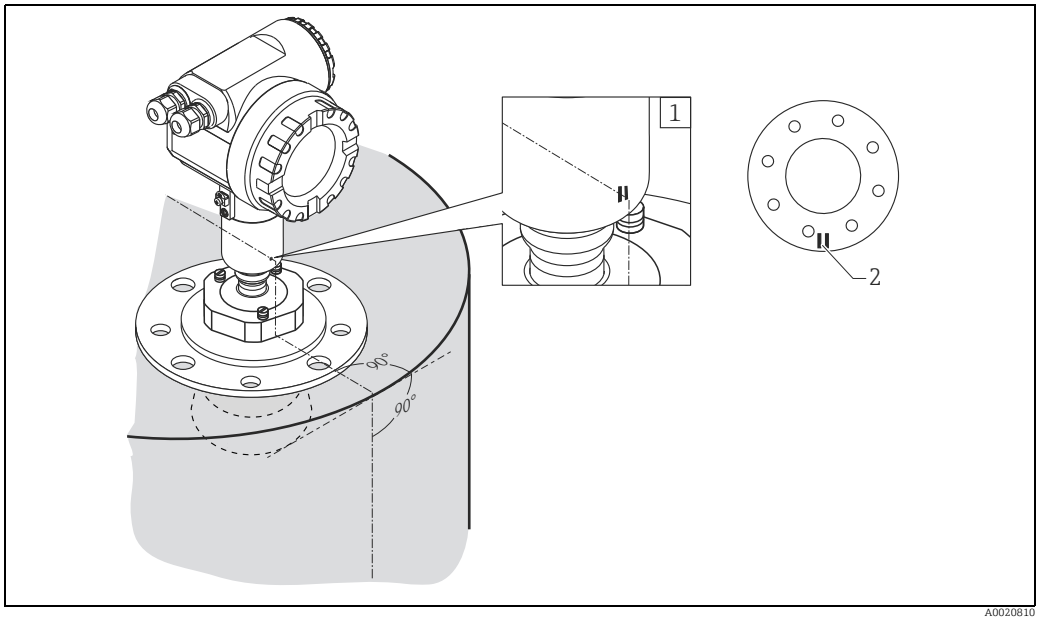

1 Marker at sensor
2 Marker at flange

3.2 Incoming acceptance, transport, storage

3.2.1 Incoming acceptance

Check the packing and contents for any signs of damage. Check the shipment, make sure nothing is missing and that the scope of supply matches your order.

3.2.2 Transport

⚠ CAUTION

Follow the safety instructions and transport conditions for devices of more than 18 kg (39.69 lbs).

3.2.3 Storage

Pack the measuring device so that is protected against impacts for storage and transport. The original packing material provides the optimum protection for this.
The permissible storage temperature is -40 to +80 °C (-40 to +176 °F).

3.3 Installation conditions

3.3.1 Engineering hints

Orientation

- Recommended distance (1) wall - **outer edge** of nozzle: ~1/6 of tank diameter ("Beam angle", → 12).
- Not in the centre (3), interference can cause signal loss.
- Not above the fill stream (4).
- It is recommended to use a weather protection cover (2) in order to protect the transmitter from direct sun or rain. Assembly and disassembly is simply done by means of a tension clamp ("Accessories", → 63).

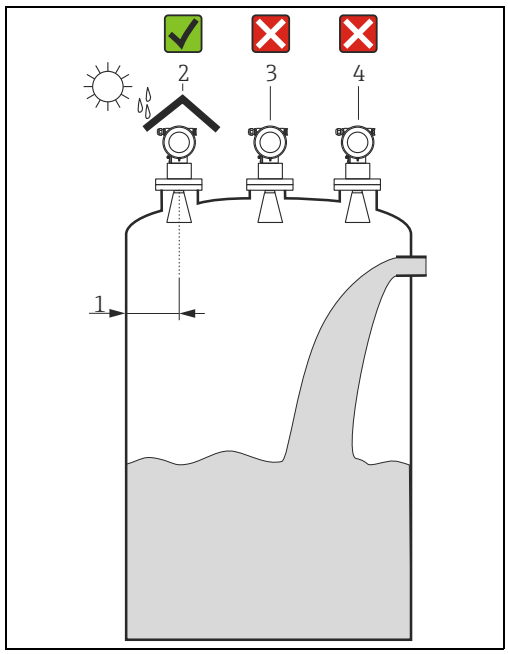

A0020541

Tank installations

- Avoid any installations (1), like limit switches, temperature sensors, etc., inside the signal beam ("Beam angle", → 12).
- It is essential that HiHi alarm is below the blocking distance (BD) and the safety distance (SD).
- Symmetrical installations (2), e.g. vacuum rings, heating coils, baffles, etc., can also interfere with the measurement.

Optimization options

- Antenna size: the bigger the antenna, the smaller the beam angle, the less interference echoes.
- Mapping: the measurement can be optimized by means of electronic suppression of interference echoes.
- Antenna alignment: "**Optimum mounting position**", → 15.
- Stilling well: a stilling well can always be used to avoid interference. The FMR532 with planar antenna is recommended for stilling wells with a diameter DN150 (6") and larger.
- Metallic screens (3) mounted at a slope spread the radar signals and can, therefore, reduce interference echoes.

Please contact Endress+Hauser for further information.

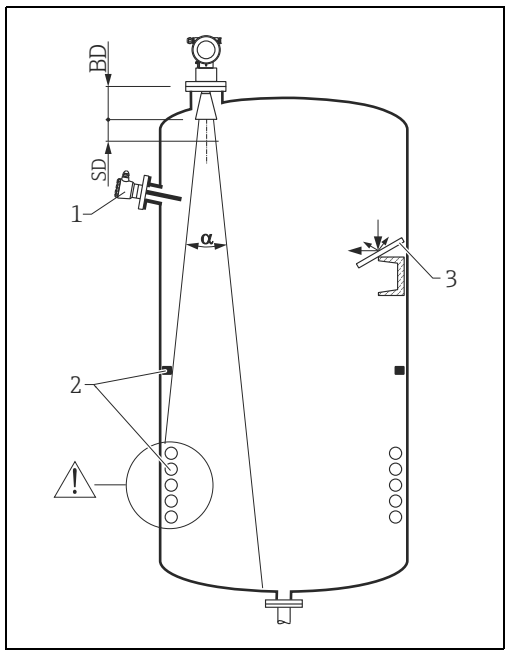

A0020450

Beam angle

The beam angle is defined as the angle α where the energy density of the radar waves reaches half the value of the maximum energy density (3dB-width). Microwaves are also emitted outside the signal beam and can be reflected off interfering installations. Beam diameter **W** is a function of antenna type (beam angle **α**) and measuring distance **D.** The recommended distance to the tank wall is indicated in the tables below. It is strongly recommended to avoid any mechanical obstacles within the highlighted area.

	Horn antenna
Antenna size	100 mm (4")
Beam angle (α)	8°

Measuring distance (D)	Beamwidth diameter (W)	Recommended distance to wall	
		0° tilting	3° tilting
5 m (16 ft)	0,70 m (2.3 ft)	0,89 m (2.9 ft)	0,62 m (2 ft)
10 m (33 ft)	1,40 m (2.6 ft)	1,77 m (5.8 ft)	1,23 m (4 ft)
15 m (49 ft)	2,10 m (6.9 ft)	2,65 m (8.7 ft)	1,85 m (6.1 ft)
20 m (66 ft)	2,80 m (9.2 ft)	3,53 m (12 ft)	2,46 m (8.1 ft)
25 m (82 ft)	3,50 m (11 ft)	4,41 m (14 ft)	3,07 m (10 ft)
30 m (98 ft)	4,20 m (14 ft)	5,29 m (17 ft)	3,69 m (12 ft)

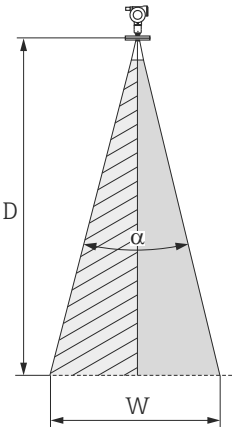

A0020805

	Parabolic antenna	
Antenna size	200 mm (8")	250 mm (10")
Beam angle (α)	4.4°	3.3°

Measuring distance (D)	Recommended distance to wall	
5 m (16 ft)	0,35 m (1.1 ft)	0,2 m (0.7 ft)
10 m (33 ft)	0,70 m (2.3 ft)	0,5 m (1.6 ft)
15 m (49 ft)	1,05 m (3.4 ft)	0,75 m (2.5 ft)
20 m (66 ft)	1,40 m (2.6 ft)	1,05 m (3.4 ft)
25 m (82 ft)	1,75 m (5.7 ft)	1,3 m (4.3 ft)
30 m (98 ft)	2,10 m (6.9 ft)	1,6 m (5.2 ft)
35 m (115 ft)	2,45 m (8 ft)	1,85 m (6.1 ft)
40 m (131 ft)	2,80 m (9.2 ft)	2,10 m (6.9 ft)

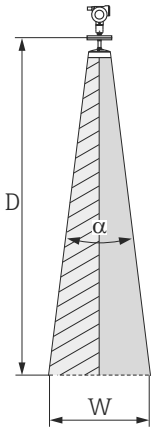

A0020806

Measuring conditions

- Tank diameter and height should be at least dimensioned such that a reflection of the radar signal on both sides of the tank can be avoided.
- In case of media with a low dielectric constant (media groups A and B), the tank bottom can be visible through the medium at low levels (low height **C**). Reduced accuracy has to be expected in this range. If this is not acceptable, we recommend positioning the zero point at a distance **C** (see Fig.) above the tank bottom in these applications.
- In principle it is possible to measure up to the tip of the antenna with FMR540. However, due to considerations regarding accuracy corrosion and build-up, the end of the measuring range should not be chosen any closer than **A** (see **A** in Fig.).

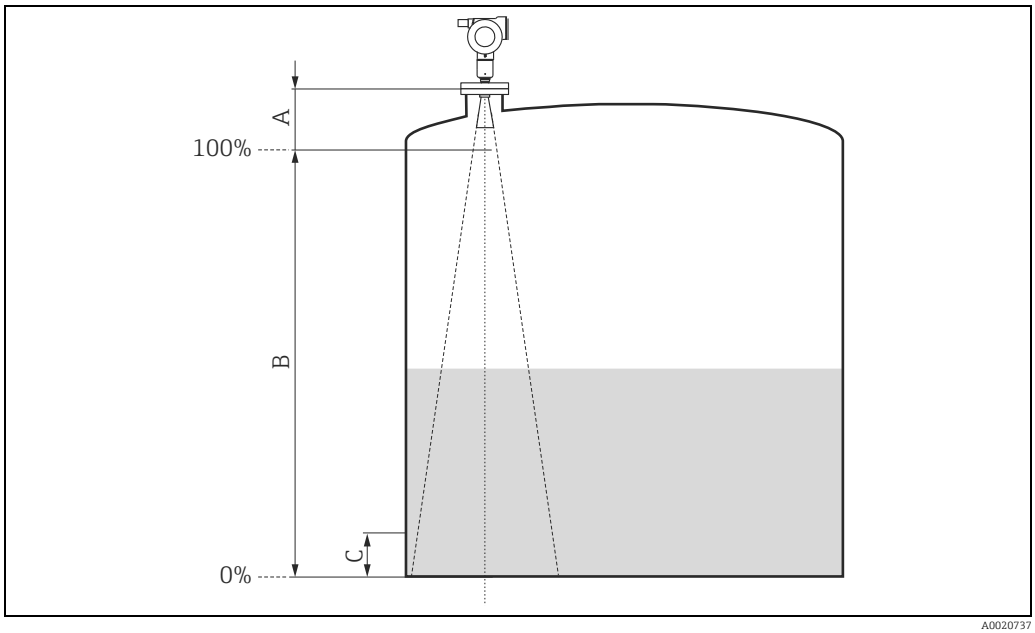

A0020737

1)	A [mm (in)]			B [m (ft)]	C [mm (in)]
	4" Horn antenna	8" Parabolic antenna	10" Parabolic antenna	All antennas	
FMR540 (without extension)	870 (34.3)	502 (19.8)	530 (20.9)	>0.5 (1.6)	>300 (11.8)
FMR540 with Extension 150 mm (5.9 in)	1020 (40.2)	652 (25.7)	680 (26.8)	>0.5 (1.6)	>300 (11.8)
FMR540 with Extension 250 mm (9.8 in)	1120 (44.1)	752 (29.6)	780 (30.7)	>0.5 (1.6)	>300 (11.8)
FMR540 with Extension 450 mm (18 in)	1320 (52.0)	952 (37.5)	980 (38.6)	>0.5 (1.6)	>300 (11.8)

1) All values are based on reference conditions.

Behaviour if measuring range is exceeded

The behaviour in case of the measuring range being exceeded can be freely set:
The default setting is a current of 22 mA and the generation of a digital warning (E651).

Measuring range

The usable measuring range depends on the size of the antenna, the reflectivity of the medium, the mounting location and eventual interference reflections. To achieve an optimised signal strength it is recommended to use an antenna with as large as possible diameter (DN200(8") or DN250 (10") parabolic antenna).
The following tables describe the groups of media as well as the achievable measuring range as a function of application and media group. If the dielectric constant of a medium is unknown, it is recommended to assume media group B to ensure a reliable measurement.

Media group	DC (Εr)	Examples
A1	1.4 to 1.6	Propane, butane
A2	1.6 to 1.9	Non-conducting liquids, kerosene, jet fuels, gasoline, LPG
B	1.9 to 4	Non-conducting liquids, e.g. gasline, diesel fuel, heavy oil, motor oil, asphalt, bitumen, BTEX, residual fuel
C	4 to 10	E.g. concentrated acids, organic solvents, esters, aniline, alcohol, acetone, ...
D	> 10	Conducting liquids, e.g. aqueous solutions, dilute acids and alkalis

Measuring range depending on sensor type and media group

Media group		Horn antenna without sensor extension	Parabolic antenna without sensor extension
		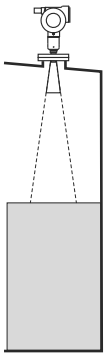	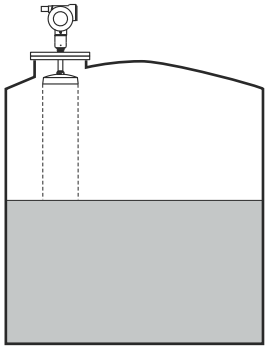
		Measuring range[1]	**Measuring range**[1]
A1	DC (Εr) = 1.4 to 1.6	Please contact your Endress+Hauser sales organization.	
A2	DC (Εr) = 1.6 to 1.9	0,6...20 m (2...66 ft)	0,6...40 m (2...131 ft)
B	DC (Εr) = 1.9 to 4	0,6...20 m (2...66 ft)	0,6...40 m (2...131 ft)
C	DC (Εr) = 4 to 10	0,6...30 m (2...98 ft)	0,6...40 m (2...131 ft)
D	DC (Εr) > 10	0,6...30 m (2...98 ft)	0,6...40 m (2...131 ft)
Max. measuring range with cudstody transfer approval		NMi: 23 m (75 ft) PTB: 23 m (75 ft)	NMi: 26 m (85 ft) PTB: 30 m (98 ft)

1) All values are based on reference conditions.

For stilling well applications Micropilot S FMR532 is recommended (see TI01122F/00/EN).

3.4 Installation instructions

3.4.1 Mounting kit

For the mounting , you will require the following tool:
- The tool for flange mounting
- 90 mm wrench for adjustment of the alignment device (only for devices with alignment device)
- 4 mm (0.1") Allen wrench for turning the housing

3.4.2 Installation in vessel

Optimum mounting position

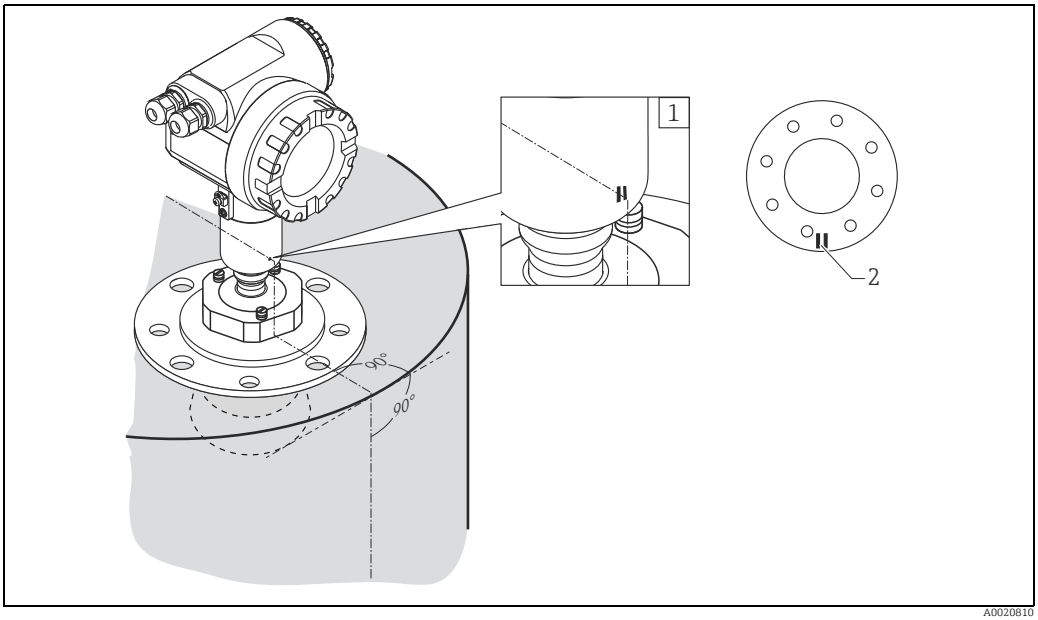

A0020810

1 Marker at sensor
2 Marker at flange

Standard installation FMR540 with horn antenna

- Observe installation instructions, → 11.
- Marker must be aligned towards tank wall. The marker is located clearly visible on the sensor neck or the flange.
- After mounting, the housing can be turned 350° in order to simplify access to the display and the terminal compartment.
- Adjust vertical sensor alignment in case the flange is not parallel to the face is medium surface.
- The horn antenna should protrude from the nozzle. If necessary, choose version with antenna extension. Please contact Endress+Hauser for application with higher nozzle.
- The horn antenna should be installed with 3° inclination towards the tank center. To avoid interference reflections or for optimum alignment within the tank, the FMR540 with optional alignment device can be swiveled by 15° in all directions. For more informations please see Operating Instructions KA00274F/00/A2. Please contact Endress+Hauser Service Organization for commissioning.

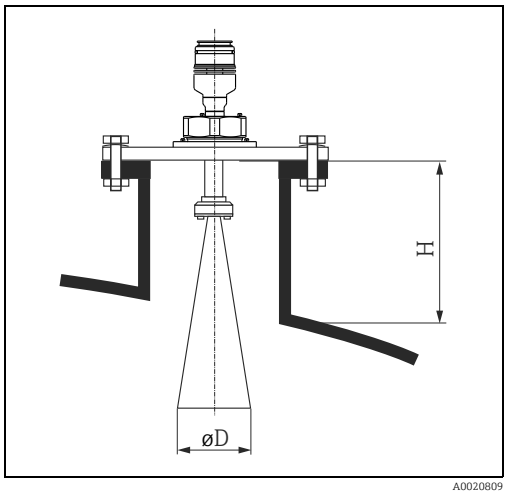

A0020809

Antenna size	100 mm (4")
D [mm (in)]	95 (3.74)
H [mm (in)] (without antenna extension)	< 430 (16.9)

Standard installation FMR540 with parabolic antenna

- Observe installation instructions, → 11.
- Marker is aligned towards tank wall.
  The marker is located clearly visible on the sensor neck or the flange.
- After mounting, the housing can be turned 350° in order to simplify access to the display and the terminal compartment.
- Ideally the parabolic antenna should protrude from the nozzle (1). Particularly when using the alignment device, please ensure that the parabolic reflector is protruding from the nozzle/roof so as not to inhibit alignment.

  For application with higher nozzle install parabolic antenna completely in the nozzle (B), including RF-wave guide.

- The parabolic antenna should be installed vertically.
  To avoid interference reflections or for optimum alignment within the vessel, the FMR540 with optional alignment device can be swiveled by 15° in all directions.
  For more informations please see Operating Instructiosn KA00274F/00/A2.
  Please, contact Endress+Hauser Service organization for commissioning.

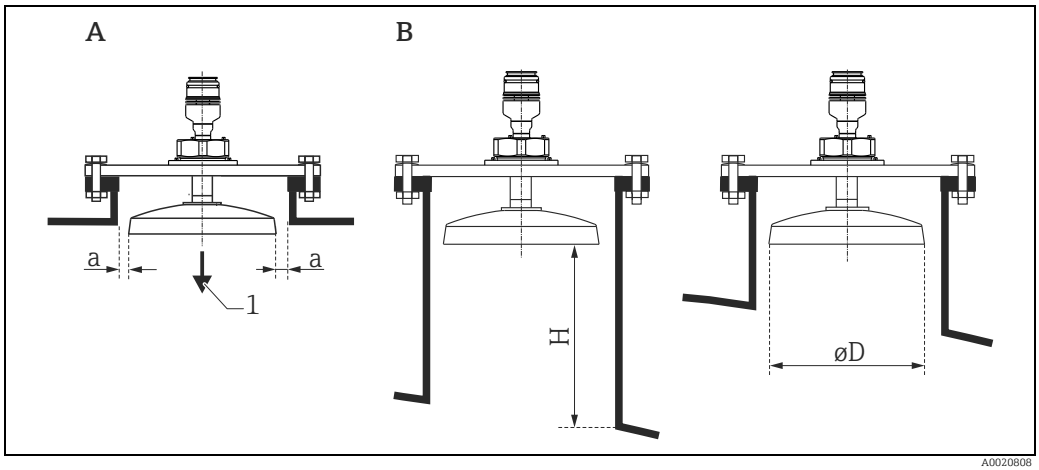

A Antenna protrudes from the nozzle
B Antenna mounted in nozzle
1 Mounted perpendicular to the liquid surface
a Observe distance

Antenna size	200 mm (8")	250 mm (10")
D [mm (in)]	173 (6.81)	236 (9.29)
H [mm (in)] (without antenna extension)	< 200 7.87)	< 200 (7.87)

FMR540 with alignment device

Micropilot S should be installed vertically towards the Liquid surface for best measuring performance of ±1 mm (0.04 in). Using the alignment device it is possible to tilt the antenna axis by up to 15° in all directions. The alignment device is used for the optimum alignment of the radar beam to the liquid surface. The Sensor should be positioned vertical to the liquid surface in inclination of 0° for Parabolic Antenna and up to 3° for Horn Antenna.

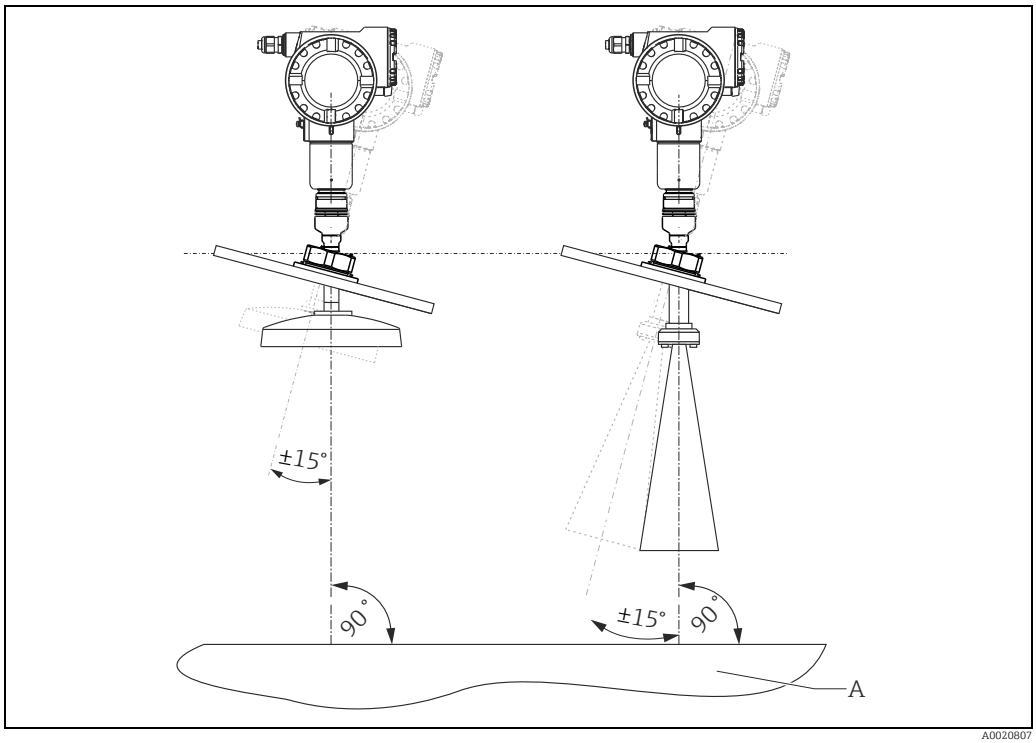

A Medium

To align the antenna as precisely as possible, it is recommended to use the sensor alignment tool, which is available as an accessory.
For more informations please see instructions in KA00274F/00/A2.
In case of custody Application, the screws must be locked with wires.

Sensor alignment tool for alignment device

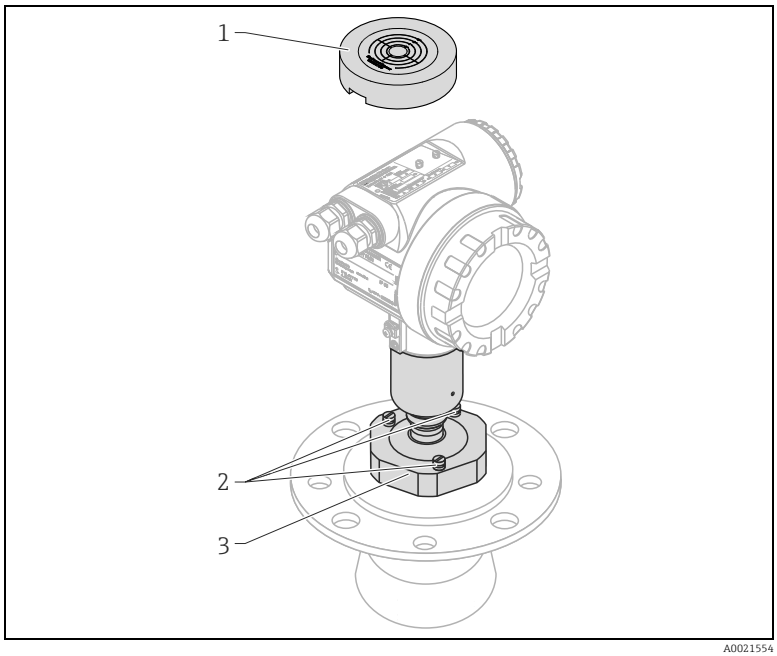

A0021554

A sensor alignment tool (1) is recommended to be used at the time of installation for FMR540 with alignment device.

Alignment procedure

This procedure is only applicable to the sensors purchased with alignment device (3). To carry out this procedure requires an accessory from Endress+Hauser, sensor alignment tool (1) for Micropilot S FMR540.

Before starting this procedure, please observe Micropilot S FMR540 has been mounted on the tank in proper position and all flange bolts (2) are tightened.

Tools: 90 mm open wrench
Accessory Package contains:
Sensor alignment tool (part no. 52026756)
Description of procedure "Sensor Alignment using Sensor alignment tool"
(KA00274F/00/A2 part no. 52027425)

1. Loosen the nut (3), so that the FMR540 can tilt smoothly.
2. Observe the sensor can smoothly tilt its position. The nut should not be too loose.

   Tilt the Micropilot S to approximately vertical to the medium surface (A) or horizontal plane.

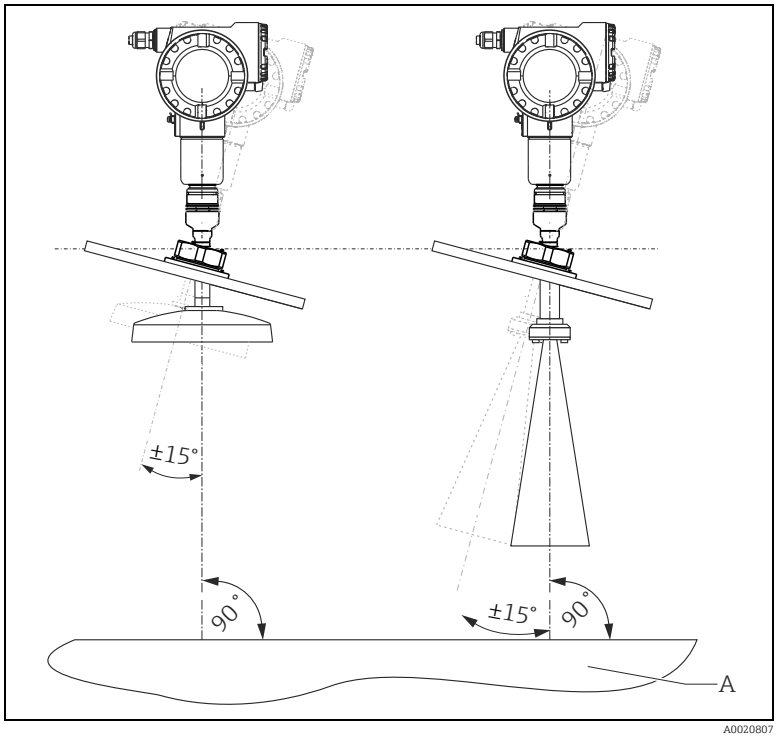

A0020807

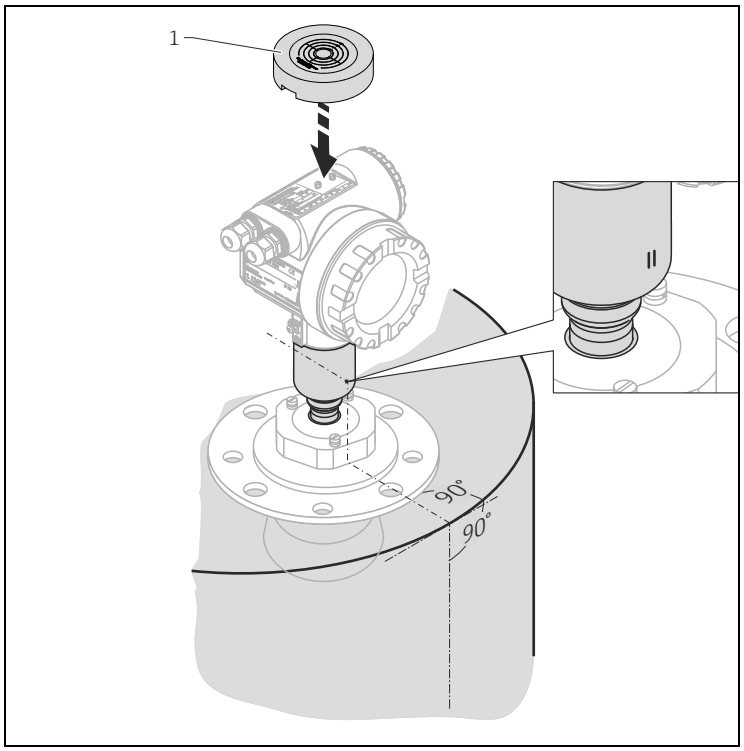

A0021550

3. Place the Sensor alignment tool (1) for Micropilot S FMR540. Please, note to avoid any obstacles between the backside of the Alignment tool and the nameplate of Micropilot S FMR540.

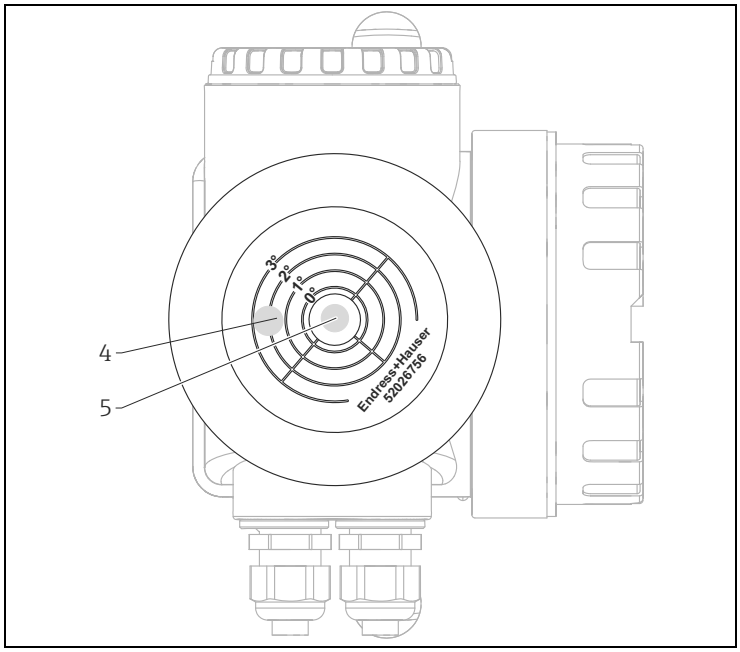

A0021415

4. Micropilot S FMR540 with Horn Antenna:
Tilt the FMR540 targeting the direction of tank center up to the position where the angle indicators`s outer circle reaches the circle of 3 deg (4).

Exceeding the 3 degree position may cause a weaker signal (or loss of signal).

Micropilot S FMR540 with Parabolic Antenna:
Tilt the FMR540 to the position where the bubble comes into the center (5) of the inclination indicator (0 deg).

Gradually tighten the nut of the alignment tool and make sure to keep the position of 0 degree/3 degree inclination.

After tightening the nut, check if the sensor cannot tilt and change its position. Torque for the nut: 80 to 85 Nm (59 to 62.69 lbf ft).
If it is required by the local custody transfer authority, please seal the alignment device at the sealing screws using the provided wires and seal metals.

Sealing for custody transfer applications

The alignment device can be sealed using the provided slotted capstan screws. The seal wires must be installed against the open direction in order to assure that a loosening of the alignment device is not possible.

It is recommended to seal at least two of the three sealing points provided.

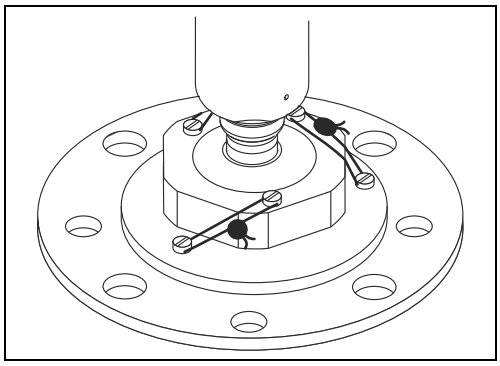

A0021559

Integrated air purge connection

In some applications, the integrated air purge connection can prevent clogging of the antenna.

- Permanent operation:
  recommended pressure range of the purge air: 1.2 to 1.5 bar (18 to 22.5 psi) abs.
- Pulsed operation:
  max. pressure of purge air: 6 bar abs.

NOTICE

Moisture or dust can collect and lead to false measurement results!

▶ Make sure to use dry purge air!

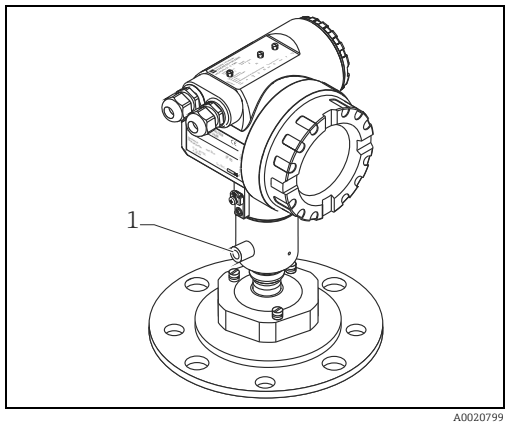

A0020799

1 Air purge connection G1/4"
(max. torque 3,5 Nm (2.58 lbft ft)

3.4.3 Turn housing

After mounting, the housing can be turned 350° in order to simplify access to the display and the terminal compartment. Proceed as follows to turn the housing to the required position:

1. Undo the allen screw
2. Turn the housing in the required direction
3. Tighten up the allen screw strongly by hand

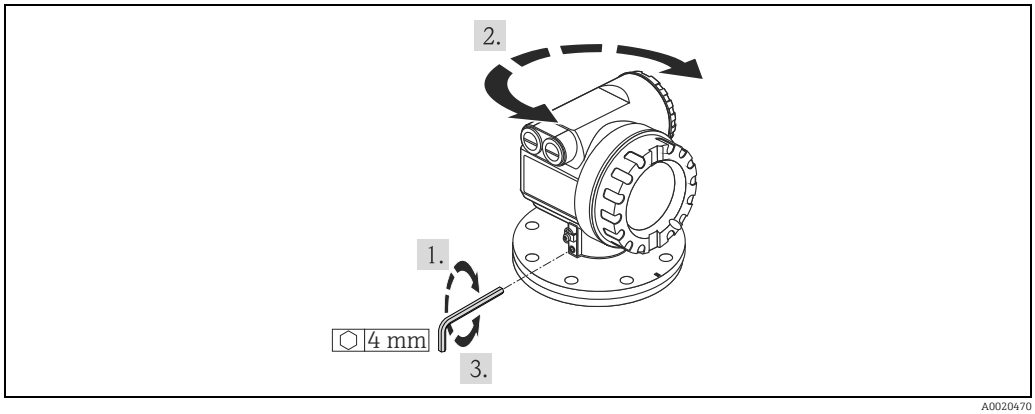

A0020470

3.4.4 Endress+Hauser UNI flange

The number of bolts has sometimes been reduced. The bolt-holes have been enlarged for adaption of dimensions, therefore, the flange needs to be properly aligned to the counterflange before the bolts are tightened.

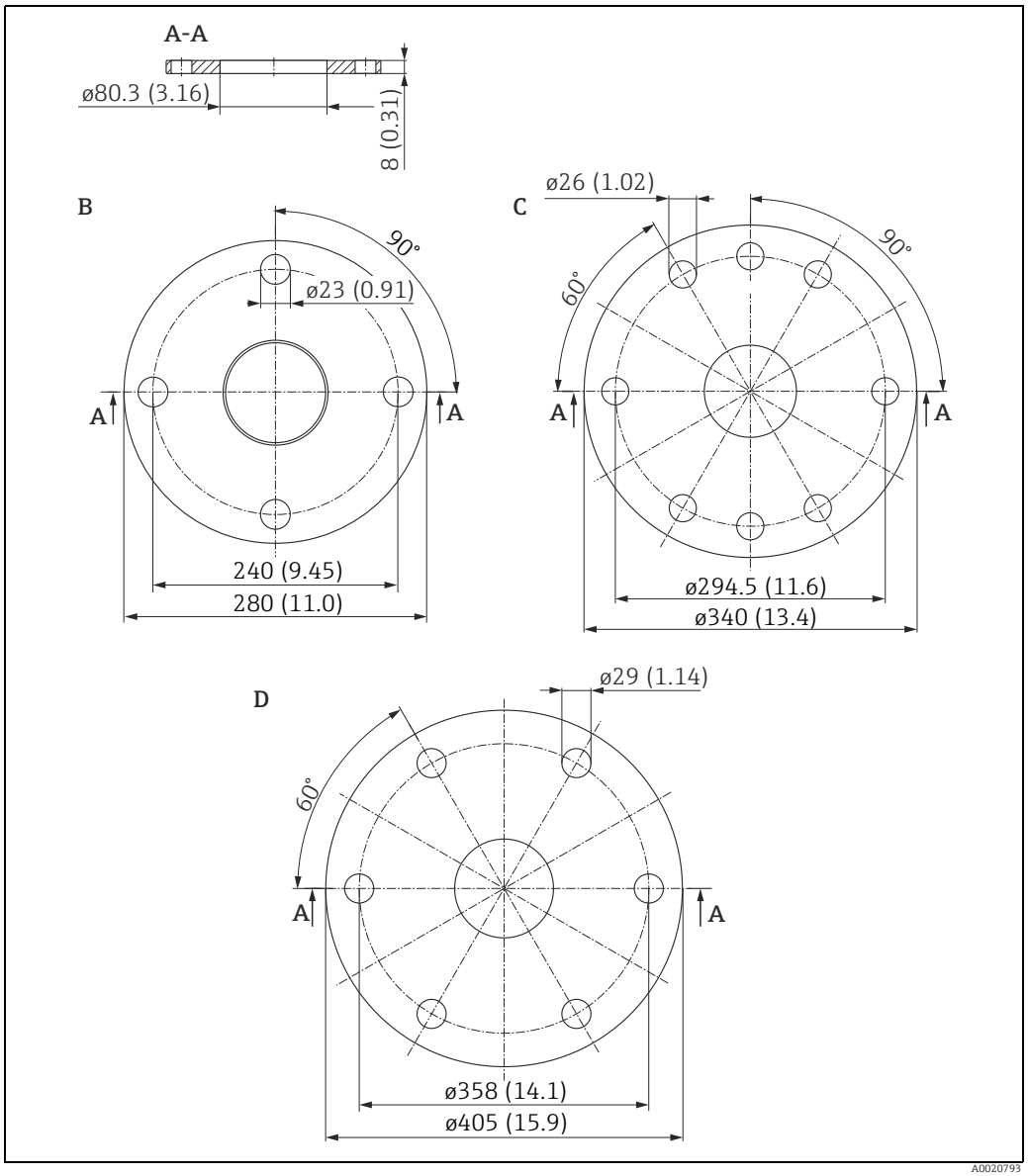

Dimensions: mm (in)

Endress+Hauser UNI Flange	Compatibel with:	Feature	Option model
B	DN150 PN16; ANSI 6" 150 lbs; JIS 10K 150	040	XVJ
C	DN200 PN16; ANSI 8" 150 lbs; JIS 10K 200	040	X3J
D	DN250 PN16; ANSI 10" 150lbs; JIS 10K 250	040	X5J

3.4.5 Alignment unit with Endress+Hauser UNI flange

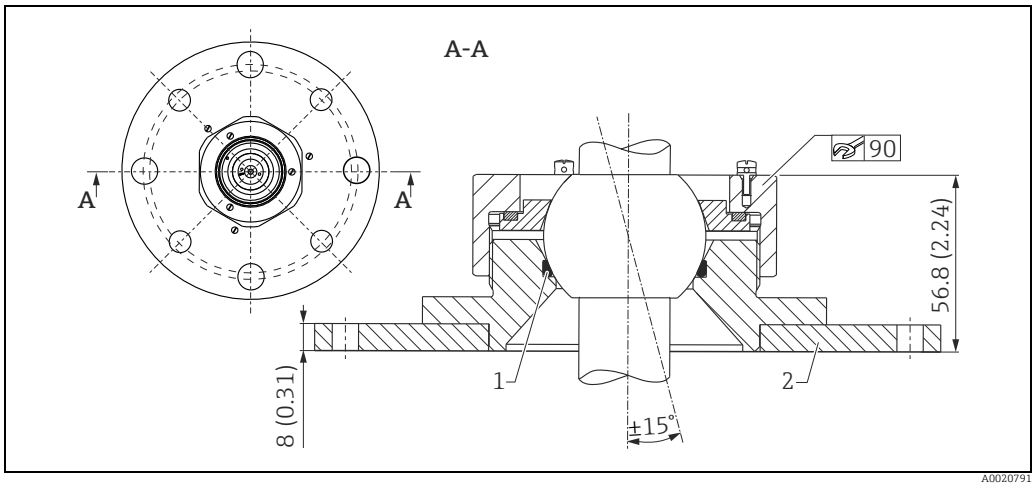

Dimensions: mm (in)

1 Viton-Dichtung
2 Endress+Hauser UNI Flange DN200/DN250

Please, also see sensor alignment tool → 📄 63.

3.5 Post-installation check

After the measuring device has been installed, perform the following checks:
- Is the measuring device damaged (visual check)?
- Does the measuring device correspond to the measuring point specifications such as process temperature/pressure, ambient temperature, measuring range, etc.?
- Is the flange marking correctly aligned (→ 📄 10)?
- Have the flange screws been tightened up with the respective tightening torque?
- Are the measuring point number and labeling correct (visual check)?
- Is the measuring device adequately protected against rain and direct sunlight (→ 📄 63)?

4 Wiring

4.1 Quick wiring guide

When grounding conductive screens, the corresponding directives EN 60079-14 and EN 1127-1 must be observed. Recommendation for safe grounding of conductive screens:

⚠ CAUTION
Before connection please note the following:
- The power supply must be identical to the data on the nameplate.
- Switch off power supply before connecting the device.
- Connect equipotential bonding to transmitter ground terminal before connecting the device.
- Tighten the locking screw:
  It forms the connection between the antenna and the housing ground potential.
- When you use the measuring system in hazardous areas, make sure you comply with national standards and the specifications in the safety instructions (XA's)

4.1.1 Wiring

⚠ CAUTION
Before connection please note the following:
- The power supply to be delivered by a transmitter supply unit.
- Befor removing housing cover at seperate connection compartment turn off the power supply!

1. Insert cable through gland . Use screened, twisted 2-wire or 4-wire cable.
   ⚠ CAUTION
   Only ground screening of the line on sensor side.
2. Make connection (see pin assignment).
3. Tighten cable gland.
4. Replace and tighten off housing cover.
5. Switch on power supply.

A Micropilot S situated in a hazardous area is connected as a **single device** to a **power supply unit and transmitter** situated outside of the hazardous area. In this case, it is recommended that the screen be connected directly to the Micropilot at the housing's earth, whereby the Micropilot S and the power supply unit are connected to the same potential equalization line.

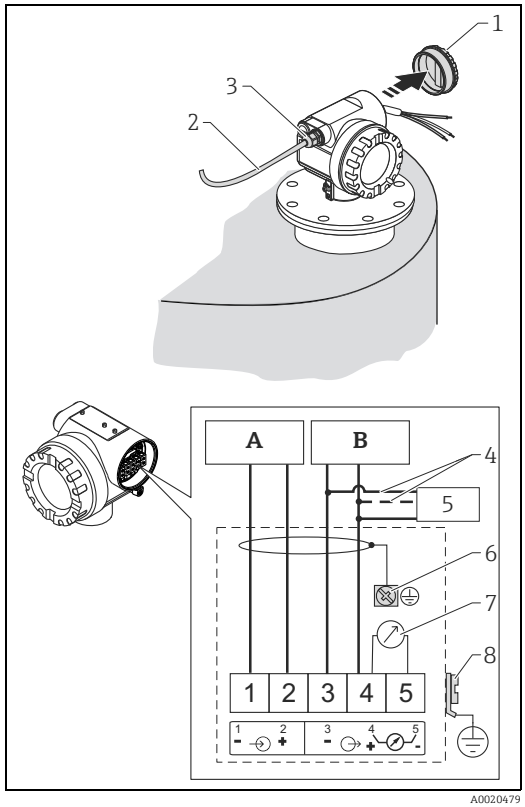

A Power 24 VDC; from a transmitter supply unit
B Signal 24 VDC; from a transmitter supply unit
1 Housing cover
2 Cable
3 Cable gland
4 Alternative connection
5 Commubox FXA195, Field Communicator
6 Shield ground
7 Test socket; Output current
8 PML (potential matching line)

4.1.2 Wiring with Tank Side Monitor NRF590

⚠ CAUTION

Before connection please note the following:

- Make sure you use the specified cable gland.
- Befor removing housing cover at seperate connection compartment turn off the power supply!

1. Insert cable through gland . Use screened, twisted 2-wire or 4-wire cable.

   ⚠ CAUTION

   Only ground screening of the line on sensor side.
2. Make connection (see pin assignment).
3. Tighten cable gland.
4. Replace and tighten off housing cover.
5. Switch on power supply.

The Micropilot S is - possibly in combination with other devices - connected to a Tank Side Monitor in a hazardous area. In this case, it is recommended that you ground the cable screen centrally at the NRF590 and connect all devices to the same potential equalization line (PML). If, for functional reasons, a capacitive coupling is required between local earth and screen (multiple grounding), ceramic condensers with a dielectric strength of min. 1500 Veff must be used, whereby the total capacitance of 10 nF must not be exceeded. Notes on grounding interconnected intrinsically safe devices are provided by the FISCO model. If there is no way to set a ground cable between NRF590 and Micropilot S it is possible to ground single side (grounding on side NRF590). In this case it's imperative to ground the shield (on Micropilot S side) via a ceramic capacitor with a maximum capacitance of 10 nF and a minimum insulating voltage of 1500 V.

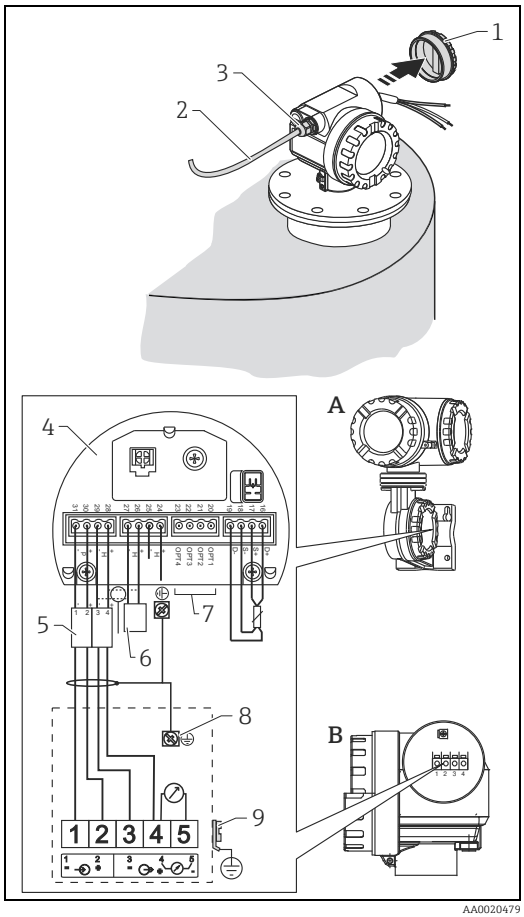

A Tank Side Monitor NRF590
B Micropilot S
1 Housing cover
2 Cabel
3 Cable gland
4 Intrinsically safe terminal board
5 Only for Micropilot S
6 HART Sensor
7 Grounding single sided on Tank Side Monitor NRF590
8 Shield ground
9 PML (potential equalization line)

4.2 Connecting the measuring unit

Terminal compartment

The housing features a separate terminal compartment.

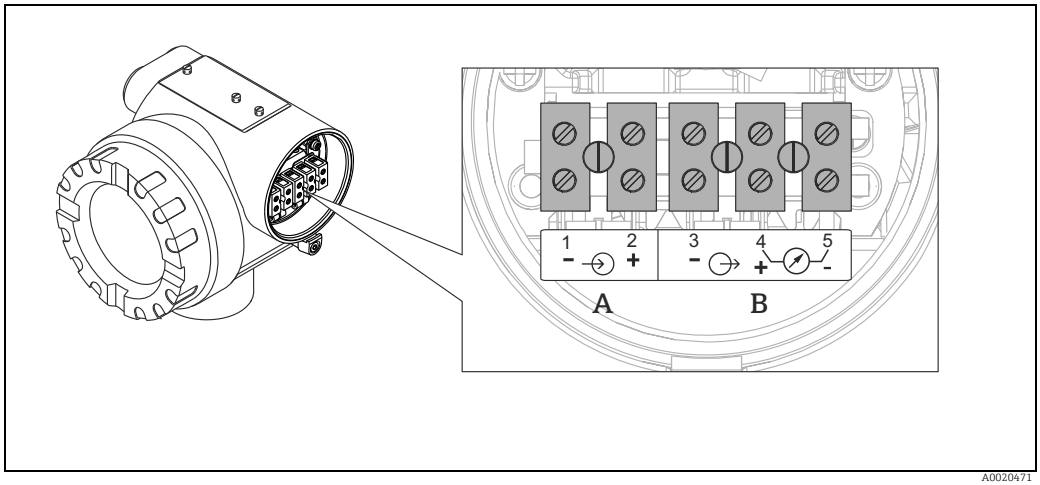

A Power supply
B Signal

Load HART

Minimum load for HART communication: 250 Ω

Cable entry

Description	Feature	Option model
Thread for cable gland M20	070	1
Cable gland M20	070	2
Thread for cable gland G ½"	070	3
Thread for cable gland NPT ½"	070	4

Supply voltage

DC voltage: per table below

Communication		Terminal voltage	minimum	maximum
Power supply	Standard	U (20 mA) =	16 V	36 V
	Ex	U (20 mA) =	16 V	30 V
Signal	Ex	U (4 mA) =	11.5 V	30 V
		U (20 mA) =	11.5 V	30 V

Power consumption

- max. 400 mW at 16 V
- max. 600 mW at 24 V
- max. 750 mW at 30 V
- Non-Ex: max. 900 mW at 36 V

Current consumption

Max. 25 mA (55 mA inrush current).

Overvoltage protector

- The level transmitter Micropilot S is equipped with an internal overvoltage protector (600 Vrms surge arrester) according to EN/IEC 60079-14 or EN/IEC 60060-1 (impulse current test 8/20 µs, Î = 10 kA, 10 pulses). Additionally, the device is protected by a galvanic insulation of 500 Vrms between the power supply and the (HART) current ouput. Connect the metallic housing of the Micropilot S to the tank wall or screen directly with an electrically conductive lead to ensure reliable potential matching.
- Installation with additional overvoltage protector HAW560Z/HAW562Z (see XA00338F "Safety instructions for electrical apparatus certified for use in explosion-hazardous areas").
  - Connect the external overvoltage protector and the Micropilot S transmitter to the local potential matching system.
  - Potentials shall be equalised both inside and outside the explosion hazardous area.
  - The cable connecting the overvoltage protector and the Micropilot S transmitter shall not exceed 1 m (3.3 ft) in length.
  - The cable shall be protected e.g. routed in an armoured hose.

Power supply

- For stand alone operation via two Endress+Hauser RN221N.
- Integrated in tank gauging system via Endress+Hauser Tank Side Monitor NRF590 (recommended operation mode).

Highly accurate measurement

For highly accurate measurements the measured variable must be transmitted using HART protocol to ensure the necessary resolution.

4.2.1 Connection to Tank Side Monitor NRF590

"Wiring with Tank Side Monitor NRF590", → 25.

4.2.2 HART connection with two Endress+Hauser RN221N

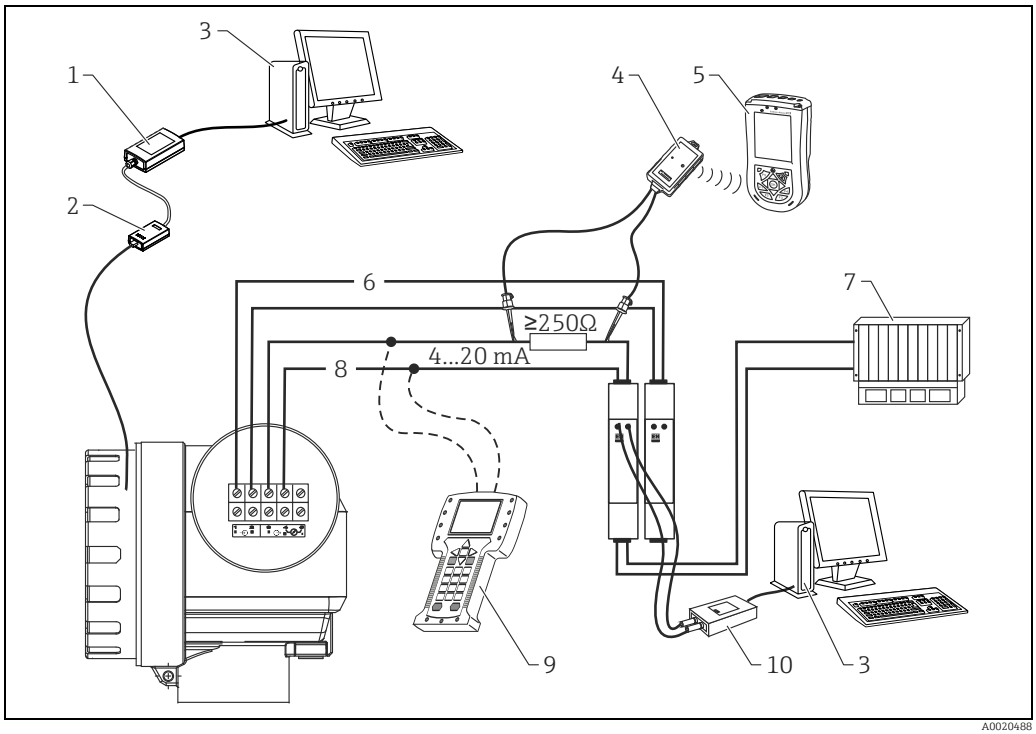

1	*Commubox FXA291 (USB)*	*6*	*Power supply*
2	*ToF Adapter FXA291*	*7*	*PLC*
3	*FieldCare*	*8*	*Signal*
4	*VIATOR Bluetooth modem with connecting cable*	*9*	*Field Communicator 475*
5	*Field Xpert SFX100*	*10*	*Commubox FXA195 (USB)*

4.2.3 HART connection with other supplies

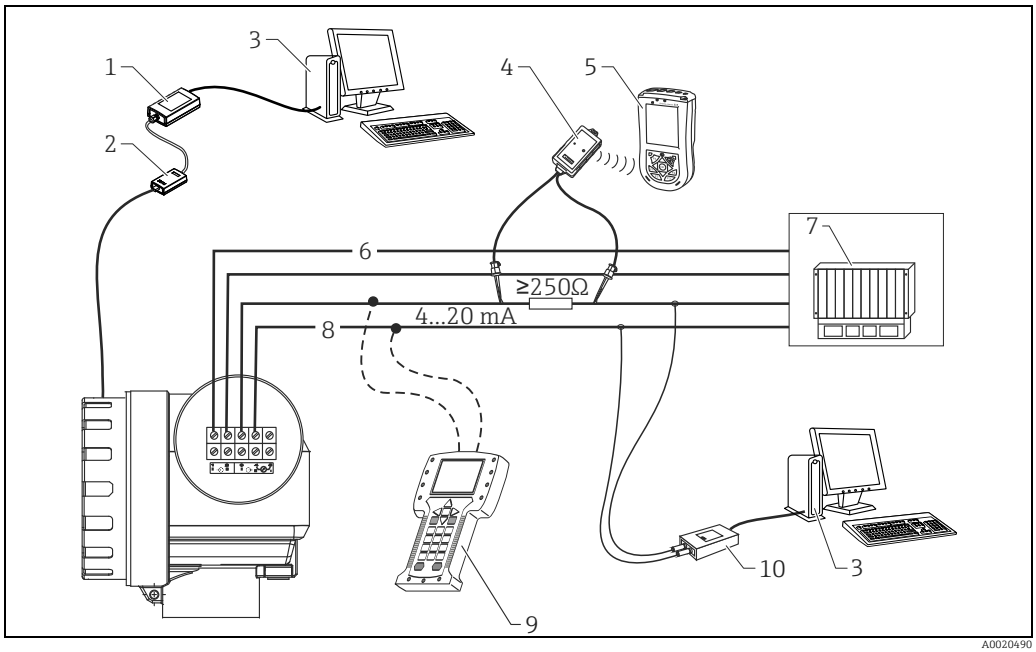

1	*Commubox FXA291 (USB)*	*6*	*Power supply*
2	*ToF Adapter FXA291*	*7*	*DC voltage or PLC*
3	*FieldCare*	*8*	*Signal*
4	*VIATOR Bluetooth modem with connecting cable*	*9*	*Field Communicator 475*
5	*Field Xpert SFX100*	*10*	*Commubox FXA195 (USB)*

4.3 Recommended connection

4.3.1 Equipotential bonding

Connect the Equipotential bonding to the external ground terminal of the transmitter.

4.3.2 Wiring screened cable

⚠ CAUTION

In Ex applications, the device must only be grounded on the sensor side. Further safety instructions are given in the separate documentation for applications in explosion hazardous areas.

4.4 Degree of protection

- Housing: IP65/68; NEMA 4X/6P
- Antenna: IP65/68; NEMA 4X/6P

4.5 Post-connection check

After wiring the measuring device, perform the following checks:
- Is the terminal allocation correct (→ 24)?
- Is the cable gland tight?
- Is the housing cover screwed tight?
- If auxiliary power is available:
  Is the device ready for operation and does the liquid crystal display show any value?
- Is grounding (tank potential) correct?

5 Operation

5.1 Quick operation guide

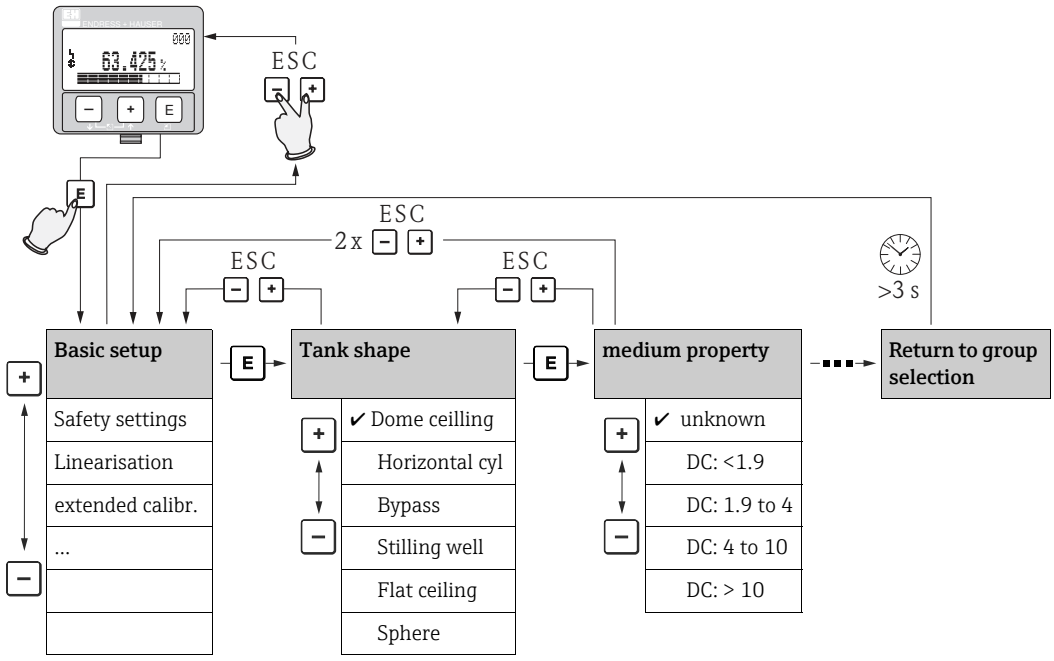

Selection and configuration in Operation menu:

1. Change from Measured Value Display to **Group Selection** by pressing E.
2. Press + or − to select the required **Function Group** (e.g. "basic setup (00)") and confirm by pressing E. The first function is selected (e.g. tank shape (002)). The active selection is marked by a ✔ in front of the menu text.
3. Activate Edit mode with + or −.
   Selection menus
   a. Select the required parameter in the **function** selected with + or −.
   b. E confirms selection; ✔ appears in front of the selected parameter.
   c. E confirms the edited value; system quits edit mode.
   d. Simultaneous pressing of + and − interrupts selection; system quits edit mode.

   Typing in numerals and text
   a. Press + or − to edit the first character of the numeral / text.
   b. E positions the cursor at the next character; continue with a. until you have completed your input.
   c. If a ↵ symbol appears at the cursor, press E to accept the value entered; system quits edit mode.
   d. Simultaneous pressing of + and − interrupts selection; system quits edit mode.
4. Press E to select the next function.
5. Press + and − simultaneously once; return to previous **function**.
   Press + and − simultaneously twice; return to **Group Selection**.
6. Press + and − simultaneously to return to **Measured value display**.

5.1.1 General structure of the operating menu

The operating menu is made up of two levels:
- **Function groups (00, 01, 03, ..., 0C, 0D):** The individual operating options of the device are split up roughly into different function groups. The function groups that are available include, e.g.: "**basic setup**", "**safety settings**", "**output", "display**", etc.
- **Functions (001, 002, 003, ..., 0D8, 0D9):** Each function group consists of one or more functions. The functions perform the actual operation or parameterisation of the device. Numerical values can be entered here and parameters can be selected and saved. The available functions of the "**basic setup**" **(00)** function group include, e.g.: "**tank shape**" **(002)**, "**medium property**" **(003)**, "**process cond.**" **(004)**, "**empty calibr**" **(005)**, etc.

If, for example, the application of the device is to be changed, carry out the following procedure:

1. Select the "**basic setup**" **(00)** function group.
2. Select the "**tank shape**" **(002)** (function (where the existing tank shape is selected).

5.1.2 Identifying the functions

For simple orientation within the function menus (→ 74), for each function a position is shown on the display.

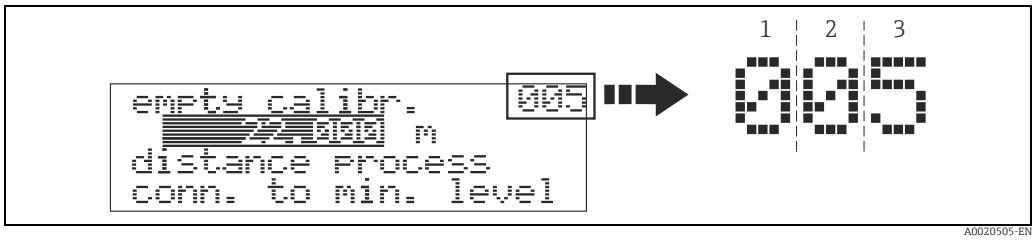

1 Function group
2 Function

The first two digits identify the function group:
- **basic setup** 00
- **safety settings** 01
- **linearisation** 04

. . .

The third digit numbers the individual functions within the function group:
- **basic setup** 00 →
  - **tank shape** 002
  - **medium property** 003
  - **process cond.** 004

  . . .

Hereafter the position is always given in brackets (e.g. "**tank shape**" **(002)**) after the described function.

5.2 Display and operating elements

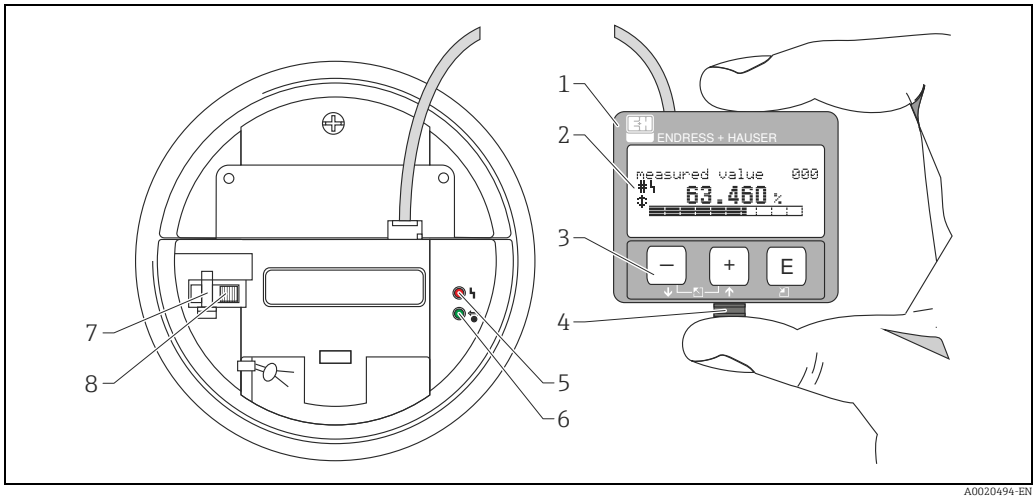

1 *LCD (liquid crystal display)*
2 *Symbols*
3 *Operating keys*
4 *Snap-fit*
5 *Red LED*
6 *Green LED*
7 *Custody locking switch*
8 *Sealing pin*

NOTICE

To access the display the cover of the electronic compartment may be removed even in hazardous area. The LCD-display can be removed to ease operation by simply pressing the snap-fit (see graphic above). It is connected to the device by means of a 500 mm (19.7 in) cable.

5.2.1 Display

Liquid crystal display (LCD)

Four lines with 20 characters each. Display contrast adjustable through key combination.

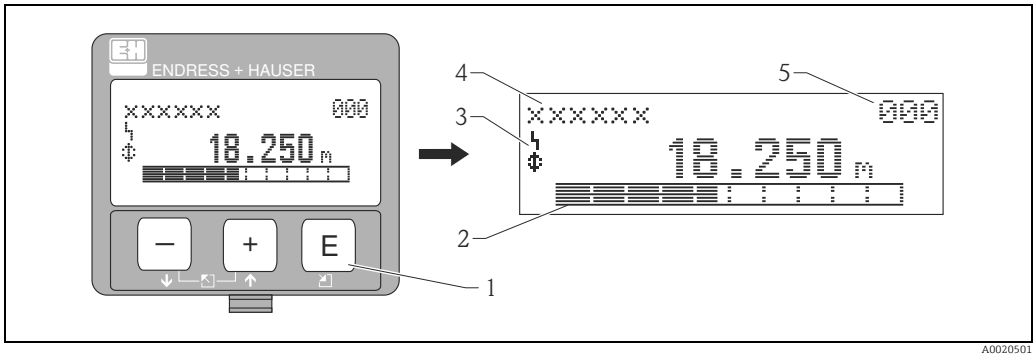

1 *Operating keys*
2 *Bargraph*
3 *Symbols*
4 *Function name*
5 *Parameter Identification number*

5.2.2 Display symbols

The following table describes the symbols that appear on the liquid crystal display:

Symbols	Meaning
	**ALARM_SYMBOL** This alarm symbol appears when the device is in an alarm state. If the symbol flashes, this indicates a warning.
	**LOCK_SYMBOL** This lock symbol appears when the device is locked, i.e. if no input is possible.
	**COM_SYMBOL** This communication symbol appears when a data transmission via e.g. HART is in progress.
	**Calibration to regulatory standards disturbed** If the device is not locked or it cannot guarantee the calibration to regulatory standards, the situation will be indicated on the display via the symbol.

Light emitting diods (LEDs):

There is a green and a red LED besides the Liquid crystal display.

LED (LED)	Meaning
red LED continuously on	Alarm
red LED flashes	Warning
red LED off	No alarm
green LED continuously on	Operation
Green LED flashes	Communication with external device

5.2.3 Key assignment

The operating elements are located inside the housing and are accessible for operation by opening the lid of the housing.

Function of the keys

Key(s)	Meaning
[+] or [↑]	▪ Navigate upwards in the selection list. ▪ Edit numeric value within a function.
[−] or [↓]	▪ Navigate downwards in the selection list. ▪ Edit numeric value within a function.
[Esc] [−] [+] or [←]	Navigate to the left within a function group.
[E]	▪ Navigate to the right within a function group. ▪ Confirm entry.
[+] and [E] or [−] and [E]	Contrast settings of the LCD.
[+] and [−] and [E]	Hardware lock / unlock After a hardware lock, an operation of the device via display or communication is not possible! The hardware can only be unlocked via the display. An unlock parameter must be entered to do so.

Custody locking switch

Access to the electronics can be prevented by means of a custody locking switch that locks the device settings. The custody locking switch can be sealed for custody transfer applications.

Software reliability

The software used in the radar device Micropilot S fulfills the requirements of OIML R85. This particularly includes:
- cyclical test of data consistency
- non-volatile memory
- segmented data storage

The radar device Micropilot S continuously monitor the compliance with accuracy requirements for custody transfer measurements according to OIML R85. If the accuracy cannot be maintained, a specific alarm is generated on the local display and via the digital communication.

5.3 Local operation

5.3.1 Locking of the configuration mode

The Micropilot can be protected in two ways against unauthorised changing of device data, numerical values or factory settings:

Function "unlock parameter" (0A4):

A value **<> 100** (e.g. 99) must be entered in "**unlock parameter**" **(0A4)** in the "**diagnostics**" **(0A)** function group. The lock is shown on the display by the symbol and can be released again either via the display or by communication.

Hardware lock:

The device is locked by pressing the [+], [−] and [E] keys at the same time.
The lock is shown on the display by the symbol and can **only** be unlocked again via the display by pressing the [+], [−] and [E] keys at the same time again.
It is **not** possible to unlock the hardware by communication. All parameters can de displayed even if the device is locked.

On-site display	Meaning
measured value 000 63.455 %	[+], [−] and [E] press simultaneous
unlock parameter 0A4 Hardware locked	
measured value 000 63.455 %	The LOCK_SYMBOL appears on the LCD

5.3.2 Unlocking of configuration mode

If an attempt is made to change parameters when the device is locked, the user is automatically requested to unlock the device:

Function "unlock parameter" (0A4):

By entering the unlock parameter (on the display or via communication) **100** (for HART devices) the Micropilot is released for operation.

Hardware unlock:

After pressing the [+], [−] and [E] keys at the same time, the user is asked to enter the unlock parameter **100** (for HART devices).

On-site display	Meaning
measured value 000 63.455 %	[+], [−] and [E] press simultaneous
unlock parameter 0A4 100	Please enter unlock code and confirm with [E]
measured value 000 63.455 %	

⚠ CAUTION

Changing certain parameters such as all sensor characteristics, for example, influences numerous functions of the entire measuring system, particularly measuring accuracy. There is no need to change these parameters under normal circumstances and consequently, they are protected by a special code known only to the Endress+Hauser service organization. Please contact Endress+Hauser if you have any questions.

5.3.3 Factory settings (Reset)

⚠ CAUTION

A reset sets the device back to the factory settings. This can lead to an impairment of the measurement. Generally, you should perform a basic setup again following a reset.

A reset is only necessary if the device...
- ... no longer functions
- ... must be moved from one measuring point to another
- ... is being de-installed /put into storage/installed

On-site display	
reset	0A3
0	
for reset code	
see manual.	

User input ("reset" (0A3)):
- 333 = customer parameters

333 = reset customer parameters

This reset is recommended whenever an device with an unknown "history" is to be used in an application:
- The Micropilot is reset to the default values.
- The customer specific tank map is not deleted.
- A linearisation is switched to "**linear**" although the table values are retained. The table can be reactivated in the "**linearisation**" **(04)** function group.

List of functions that are affected by a reset:
- tank shape (002) - liquids only
- vessel / silo (00A) - solids only
- empty calibr. (005)
- full calibr. (006)
- pipe diameter (007) - liquids only
- output on alarm (010)
- output on alarm (011)
- outp. echo loss (012)
- ramp %span/min (013)
- delay time (014)
- safety distance (015)
- in safety dist. (016)
- dip table (030)
- level/ullage (040)
- linearisation (041)
- customer unit (042)
- diameter vessel (047)
- range of mapping (052)
- pres. Map dist (054)
- offset (057)
- low output limit (062)
- curr. output mode (063)
- fixed cur. value (064)
- simulation (065)
- simulation value (066)
- 4mA value (068)
- 20mA value (069)
- format display (094)
- distance unit (0C5)
- download mode (0C8)

The tank map can also be reset in the "**mapping**"" **(055)** function of the "**extended calibr.**" **(05)** function group.

This reset is recommended whenever an device with an unknown "history" is to be used in an application or if a faulty mapping was started:
The tank map is deleted. The mapping must be recommenced.

5.4 Display and acknowledging error messages

Type of error

Errors that occur during commissioning or measuring are displayed immediately on the local display. If two or more system or process errors occur, the error with the highest priority is shown on the display.

The measuring system distinguishes between the following types of error:

- **A (Alarm):**
  Device goes into a defined state (e.g. MAX 22 mA)
  Indicated by a constant symbol.
  (For a description of the codes, → 66)
- **W (Warning):**
  Device continue measuring, error message is displayed.
  Indicated by a flashing symbol.
  (For a description of the codes, → 66)
- **E (Alarm / Warning):**
  Configurable (e.g. loss of echo, level within the safety distance)
  Indicated by a constant/flashing symbol.
  (For a description of the codes, → 66)

On-site display	
present error	
linearisation ch1	
not complete,	
not usable	A671

5.4.1 Error messages

Error messages appear as four lines of plain text on the display. In addition, a unique error code is also output. A description of the error codes is given on → 66.

- The "**diagnostics**" **(0A)** function group can display current errors as well as the last errors that occurred.
- If several current errors occur, use + or − to page through the error messages.
- The last occurring error can be deleted in the "**diagnostics**" **(0A)** function group with the funktion"**clear last error**" **(0A2)**.

5.5 HART communication

Apart from local operation, you can also parameterise the measuring device and view measured values by means of a HART protocol. The following operating options are available:
- Operation via the universal handheld operating unit, the Field Communicator 475
- Operation via the compact and robust handheld operating unit, the Field Xpert
- Operation via the Personal Computer (PC) using the operating program (e.g. FieldCare; Connections, → 57).
- Operation via the Tank Side Monitor NRF590.

NOTICE

The Micropilot S can also be operated locally using the keys. If operation is prevented by the keys being locked locally, parameter entry via communication is not possible either.

5.5.1 Protocol specific data

Manufacturer-ID	000011 hex
Device Type Code	001F hex
Transmitter specific revision	01 hex
HART specification	5.0
DD-Files	Information and files can be found on: ▪ www.endress.com ▪ www.hartcomm.org
Load HART	Min. 250 Ω
Device variables	Primary value: level or volume[1)]
Features supported	▪ Burst mode ▪ Additional Transmitter Status

1) according to configuration

5.5.2 Operation via Field Xpert

Compact, flexible and robus industry handheld terminal for remote parametrization and measured value inspection via the HART current output or FOUNDATION Fieldbus.
For details refer to Operating Instructions BA00060S/04/EN.

5.5.3 Operation with Field Communicator 475

All device functions can be adjusted via a menu operation with the Field Communicator 475.

NOTICE

Further information on the handheld unit is given in the respective operating manual included in the transport bag of the Field Communicator 475.

5.5.4 Operation with Endress+Hauser operating program

FieldCare is an Endress+Hauser asset management tool based on FDT technology. With FieldCare, you can configure all Endress+Hauser devices as well as devices from other manufacturers that support the FDT standard. Hardware and software requirements you can find on the internet:
www.endress.com » select your country » Search: FieldCare » FieldCare » Technical Data.

FieldCare supports the following functions:
- Configuration of transmitter in online operation
- Signal analysis via envelope curve
- Tank linearization
- Loading and saving device data (upload / download)
- Documentation of the measuring point

Connection options:
- HART via Commubox FXA195 and the USB port on a computer
- Commubox FXA291 with ToF Adapter FXA291 (USB) via service interface

Menu-guided commissioning

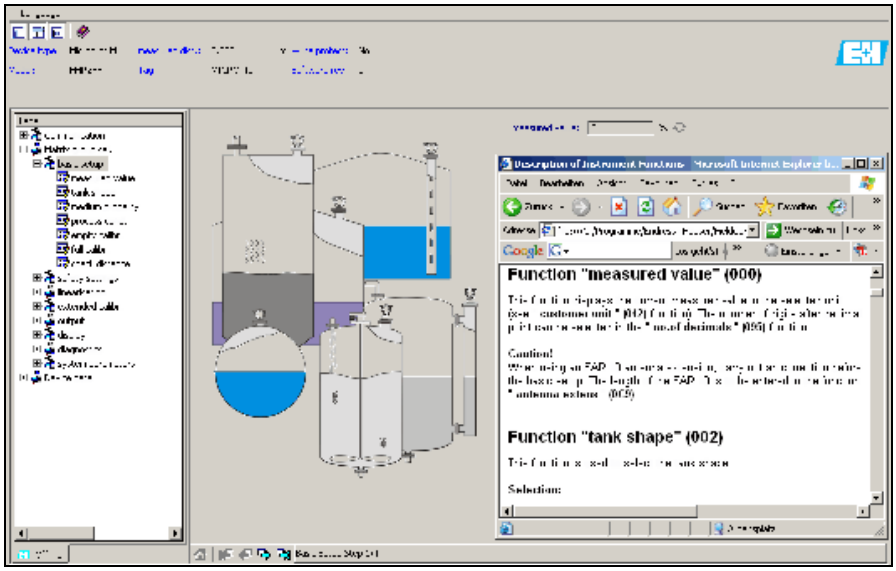

A0021211-EN

Signal analysis via envelope curve

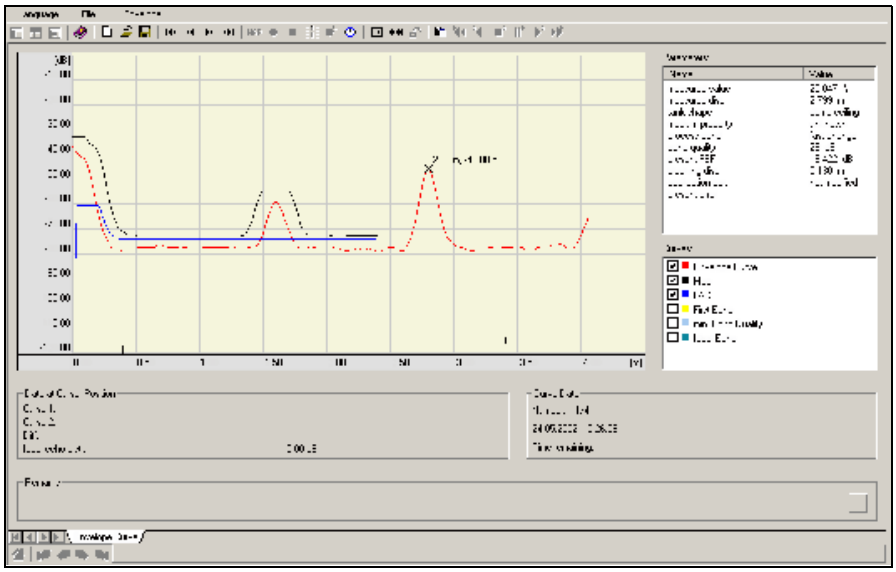

A0021212-EN

Tank linearization

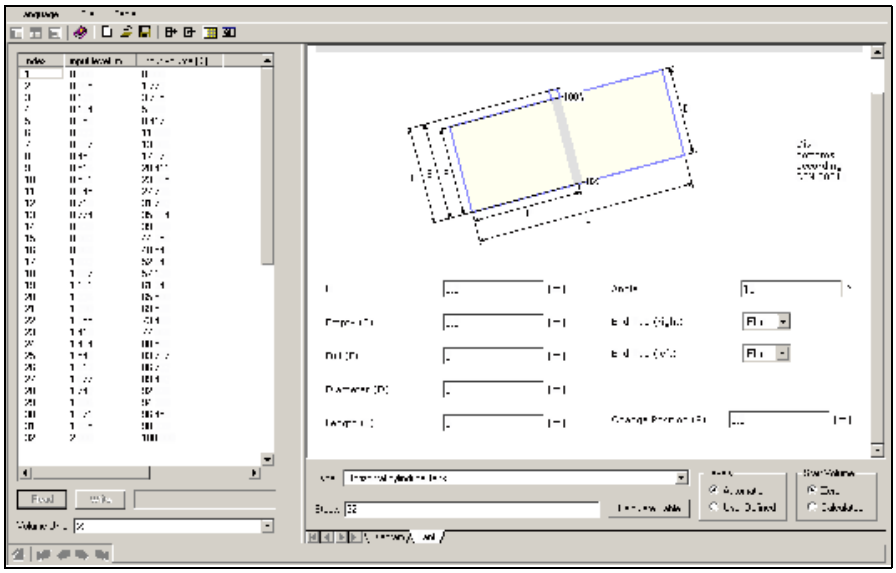

A0021213-EN

6 Commissioning

6.1 Function check

Make sure that all final checks have been completed before you start up your measuring point:
- Checklist "Post installation check", → 23.
- Checklist "Post connection check", → 29.

6.2 Switching on the measuring device

When the device is switched on for the first time, the following messages appear in a sequence of 5 s on the display: software version, communication protocol and language selection.

On-site display	Meaning
Language 092 ✔ English Deutsch Français	Select the language (this message appears the first time the device is switched on)
distance unit 0C5 ✔ m ft mm	Select the basic unit (this message appears the first time the device is switched on)
measured value 000 63.455 %	The current measured value is displayed
	After E is pressed, you reach the group selection
Group selection 00→ ✔ basic setup safety settings linearisation	This selection enables you to perform the basic setup

6.3 Basic Setup

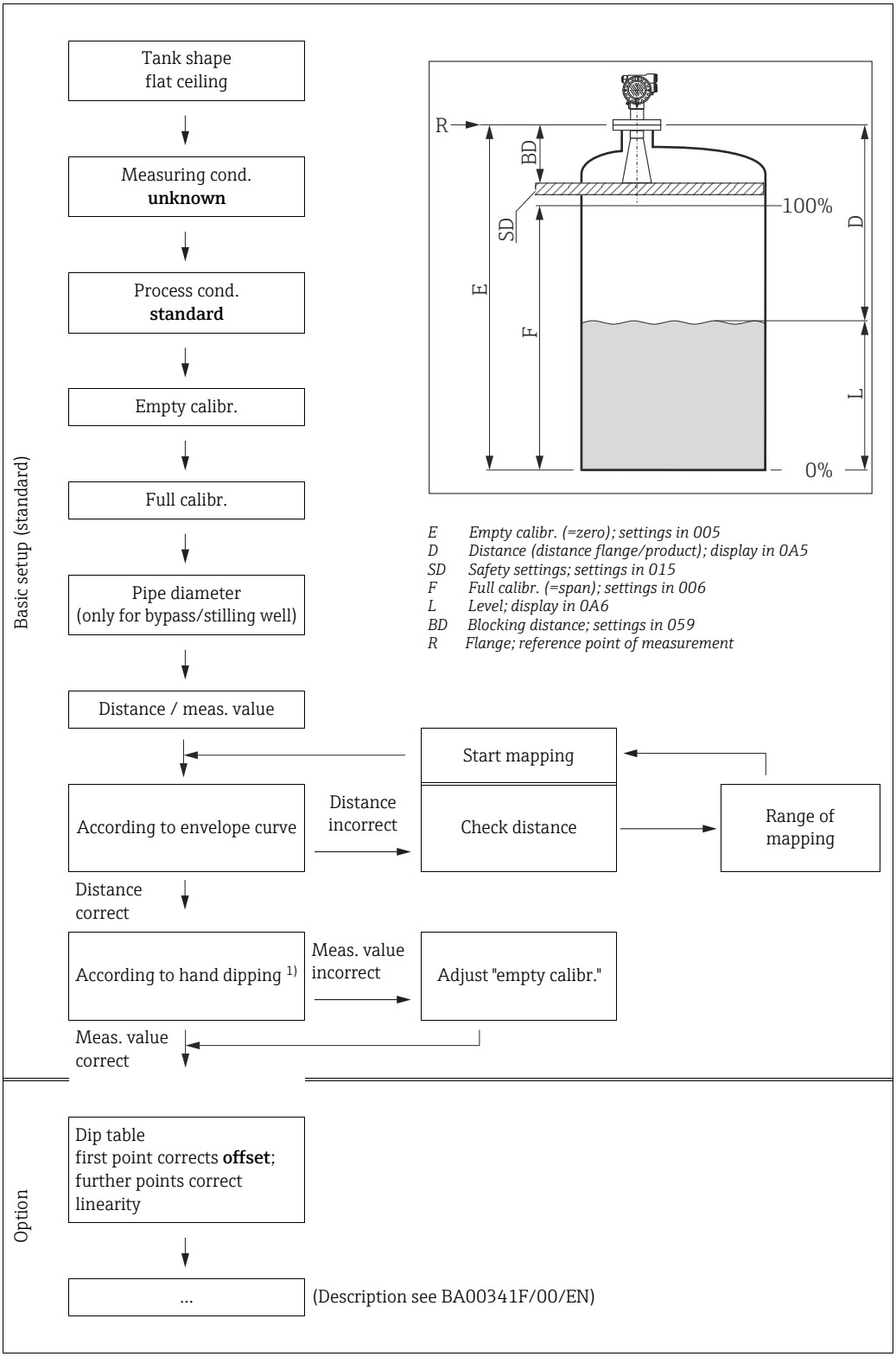

1) Note: the dipped value should be taken at a level ≥2 m (6.6 ft)

⚠ CAUTION

The basic setup is sufficient for successful commissioning in most applications. Complex measuring operations necessitate additional functions that the user can use to customise the Micropilot as necessary to suit his specific requirements.
The functions available to do this are described in detail in the BA00341F/00/EN.
Comply with the following instructions when configuring the functions in the "basic setup" (00):

- Select the functions as described, → 30.
- Some functions can only be used depending on the parameterisation of the device. For example, the pipe diameter of a stilling well can only be entered if "**stilling well**" was selected beforehand in the "**tank shape**" **(002)** function.
- Certain functions (e.g. starting an interference echo mapping (053)) prompt you to confirm your data entries. Press [+] or [−] to select "**YES**" and press [E] to confirm. The function is now started.
- If you do not press a key during a configurable time period (function group "**display**" **(09)**), an automatic return is made to the home position (measured value display).

NOTICE

Data handling during setup

- The device continues to measure while data entry is in progress, i.e. the current measured values are output via the signal outputs in the normal way.
- If the envelope curve mode is active on the display, the measured values are updated in a slower cycle time. Thus, it is advisable to leave the envelope curve mode after the measuring point has been optimised.
- If the power supply fails, all preset and parameterised values remain safely stored in the EEPROM.
- All functions are described in detail, as is the overview of the operating menu itself, in the manual **"BA00341F - Description of Instrument Functions"**, which can be found on the enclosed CD-ROM.
- The default values of the parameters are typed in **boldface**.

6.4 Basic Setup with the device display VU331

Function "measured value" (000)

On-site display	
measured value	000
63.455 %	

Meaning

This function displays the current measured value in the selected unit (see "**customer unit**" **(042)**) function). The number of digits after decimal point can be selected in the "**no.of decimals**" **(095)** function. The length of the bargraph corresponds to the percental value of the present measured value with regard to the span.

6.4.1 Function group "basic setup" (00)

On-site display	
Group selection	00→
✔ basic setup	
safety settings	
linearisation	

Function "tank shape" (002), liquids only

On-site display	
tank shape	002
✔ dome ceiling	
horizontal cyl	
bypass	

Meaning

This function is used to select the tank shape.

Further options:
- **Dome ceiling**
- Horizontal cyl
- Bypass (Not weights and measures approved, accuracy is not guaranteed. Recommendation: FMR532)
- Stilling well (Not weights and measures approved, accuracy is not guaranteed. Recommendation: FMR532)
- Flat ceiling (Typical ceiling of storage tanks: a slight slope of only a few degrees can be neglected)
- Sphere

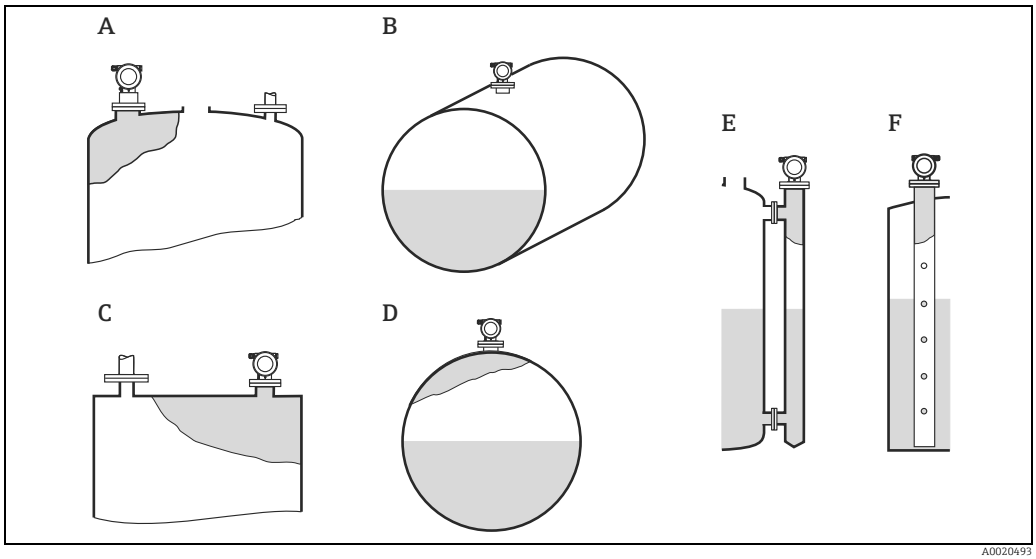

A Dome ceiling
B horizontal cyl
C Flat ceiling
D Sphere
E Bypass
F Stilling well

Function "medium property" (003), liquids only

On-site display	
medium property	003
✔ unknown	
DC: < 1.9.	
DC: 1.9...4	

Meaning

This function is used to select the dielectric constant.

Further options:
- **unknown**
- DC: < 1.9
- DC: 1.9 to 4
- DC: 4 to 10
- DC: > 10

Media group	DC (εr)	Examples
A	1.4 to 1.9	Non-conducting liquids, e.g. liquefied gas (LPG). For more information please contact your Endress+Hauser representative.
B	1.9 to 4	Non-conducting liquids, e.g. benzene, oil, toluene, white products, black products, crudes, bitumen/asphalts, ...
C	4 to 10	E.g. concentrated acids, organic solvents, esters, aniline, alcohol, acetone, ...
D	>10	Conducting liquids, e.g. aqueous solutions, dilute acids and alkalis

Function "process cond." (004), liquids only

On-site display	
process cond.	004
✔ standard	
calm surfaces.	
turb. surface	

Meaning

This function is used to select the process conditions.

Further options:
- **Standard**
- Calm surface
- Turb. surface
- Agitator
- Fast change
- Test: no filter

Standard	Calm surface
For all applications that do not fit into any of the following groups.	Storage tanks with immersion tube or bottom filling
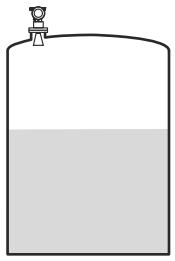 A0020531	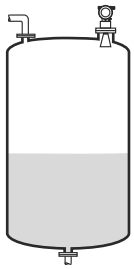 A0020533
The filter and output damping are set to average values.	The averaging filters and output damping are set to high values. → Steady meas. value → Precise measurement → Slower reaction time

Function "empty calibr." (005)

On-site display		
empty calibr.		005
	5.000 m	
distance process		
conn. to min. level		

Meaning

This function is used to enter the distance from the flange (reference point of the measurement) to the minimum level (= zero).

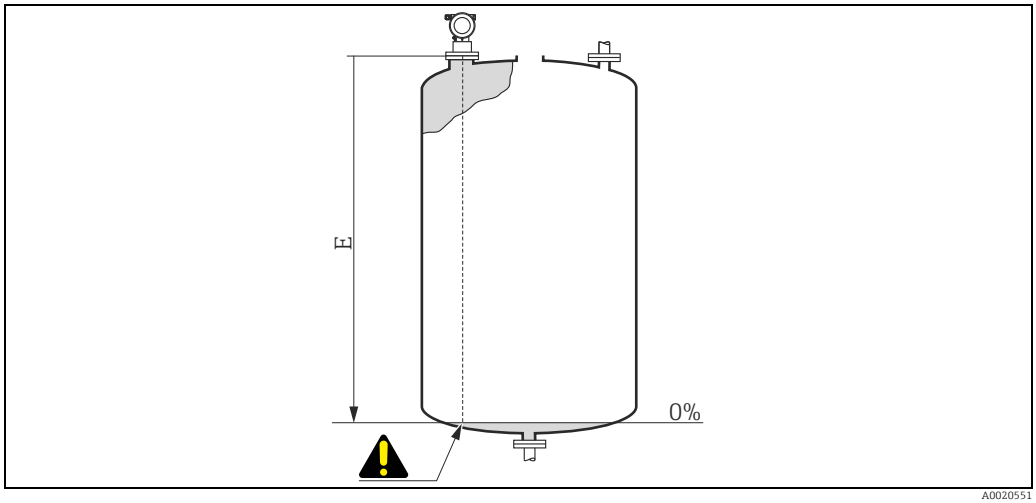

E Empty calibration (= zero)

⚠ CAUTION

For dish bottoms or conical outlets, the zero point should be no lower than the point at which the radar beam hits the bottom of the tank.

Function "full calibr." (006)

On-site display			
full calibr.			006
	5.000	m	
span			

Meaning

This function is used to enter the distance from the minimum level to the maximum level (= span). In principle, it is possible to measure up to the tip of the antenna. However, due to considerations regarding corrosion and build-up, the end of the measuring range should not be chosen any closer than 50 mm (1.97 in) to the tip of the antenna.

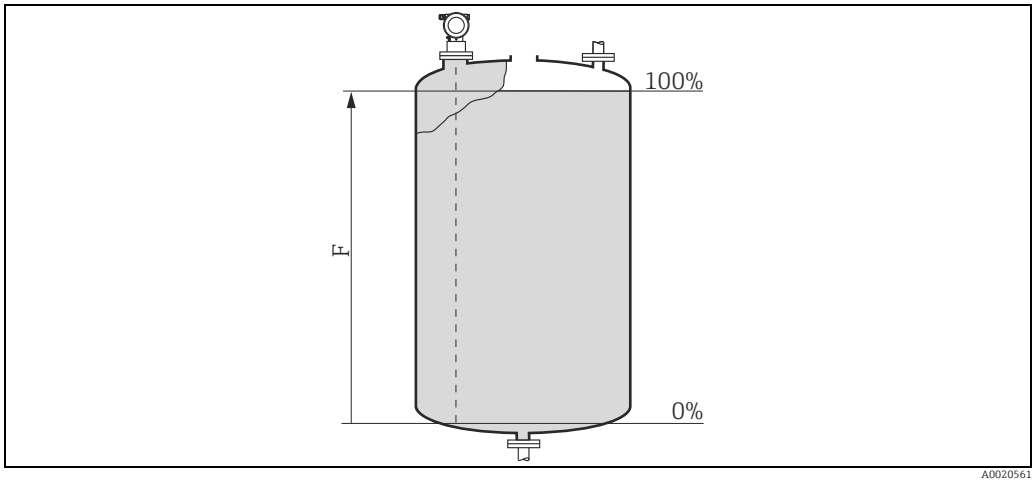

F Full calibration (= span)

NOTICE

If bypass or stilling well was selected in the "tank shape" (002) function, the pipe diameter is requested in the following step.

Function "pipe diameter" (007)

On-site display		
pipe diameter		007
	204.425	m
inner diameter of		
bypass/stilling well		

Meaning

This function is used to enter the pipe diameter of the stilling well or bypass pipe.

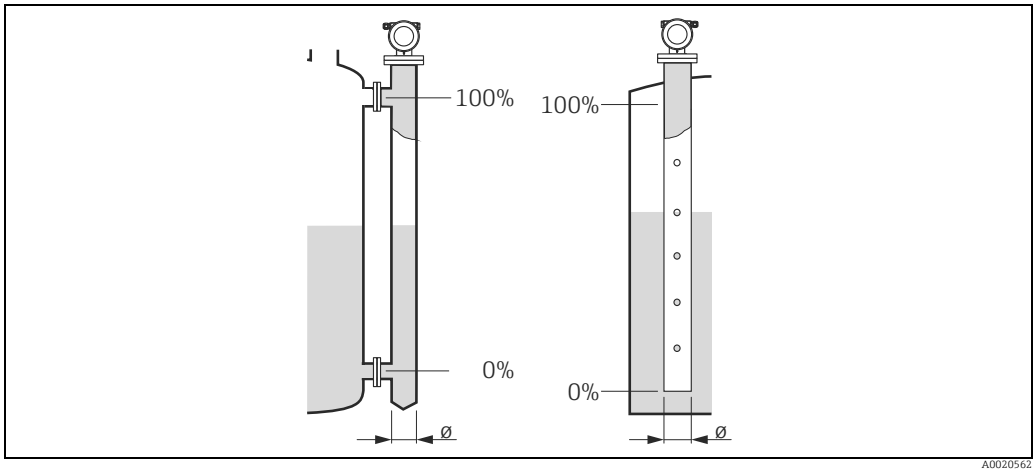

Microwaves propagate slower in pipes than in free space. This effect depends on the inside diameter of the pipe and is automatically taken into account by the Micropilot. It is only necessary to enter the pipe diameter for applications in a bypass or stilling well.

Function "dist./ meas. value" (008)

On-site display			
dist./meas.value			008
dist.	2.463	m	
m.value.	63.414	%	

Meaning

The **distance** measured from the reference point to the product surface and the **level** calculated with the aid of th empty adjustment are displayed. Check whether the values correspond to the actual level or the actual distance.
The following cases can occur:

- Distance correct - meas. value correct:
  Continue with the next function **"check distance" (051)**
- Distance correct - meas. value incorrect:
  Check **"empty calibr." (005)**
- Distance incorrect - meas. value incorrect:
  Continue with the next function **"check distance" (051)**

Function "check distance" (051)

On-site display	
check disttance	051
✔ dist. unknown	
manual	
distance = ok	

Meaning

This function triggers the mapping of interference echoes. To do so, the measured distance must be compared with the actual distance to the product surface.

Further options:
- distance = ok
- dist. too small
- dist. too big
- **dist. unknown**
- manual

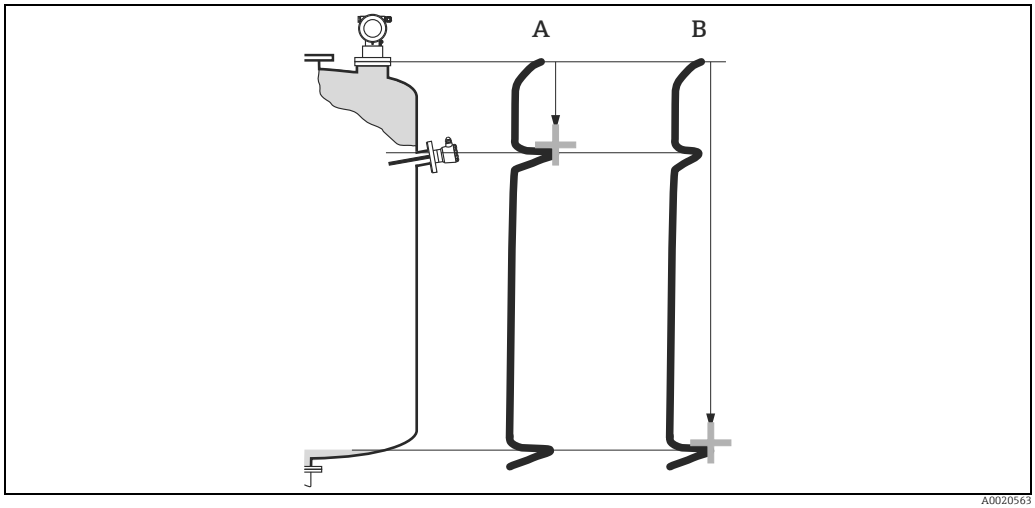

A Distance to small
B Distance ok

distance = ok
- mapping is carried out up to the currently measured echo
- The range to be suppressed is suggested in the "**range of mapping.**" **(052)** function

NOTICE
Anyway, it is wise to carry out a mapping even in this case.

dist. too small
- At the moment, an interference is being evaluated
- Therefore, a mapping is carried out including the presently measured echoes
- The range to be suppressed is suggested in the "**range of mapping.**" **(052)** function

dist. too big
- This error cannot be remedied by interference echo mapping
- Check the application parameters **(002), (003), (004)** and "**empty calibr.**" **(005)**

dist. unknown
If the actual distance is not known, no mapping can be carried out.

manual
A mapping is also possible by manual entry of the range to be suppressed. This entry is made in the "**range of mapping.**" **(052)** function.

⚠ CAUTION

The range of mapping must end 0.5 m (1.6 ft) before the echo of the actual level. For an empty tank, do not enter E, but E – 0.5 m (1.6 ft). If a mapping already exists, it is overwriten up to the distance specified in "range of mapping" (052). Beyond this value the existing mapping remains unchanged.

Function "range of mapping" (052)

On-site display		
range of mapping		052
	0.000	m
input of		
mapping range		

Meaning

This function displays the suggested range of mapping. The reference point is always the reference point of the measurement (→ 43). This value can be edited by the operator. For manual mapping, the default value is: 0 m.

Function "start mapping" (053)

On-site display	
start mapping	053
✔ off	
on	

Meaning

This function is used to start the interference echo mapping up to the distance given in "**range of mapping**" **(052)**.

Selection:
- **off**
  No mapping is carried out
- **on**
  Mapping is started

During the mapping process the message "**record mapping**"" is displayed.

⚠ CAUTION

A mapping will be recorded only, if the device is not in alarm-state.

Display "dist./meas.value" (008)

On-site display		
dist./meas.value		008
dist.	2.463	m
m.value.	63.414	%

Meaning

The **distance** measured from the reference point to the product surface and the **level** calculated with the aid of th empty adjustment are displayed. Check whether the values correspond to the actual level or the actual distance.
The following cases can occur:
- Distance correct - meas. value correct:
  Continue with the next function **"check distance" (051)**
- Distance correct - meas. value incorrect:
  Check **"empty calibr." (005)**
- Distance incorrect - meas. value incorrect:
  Continue with the next function **"check distance" (051)**

Function "set value" (009)

On-site display	
set value	009
3.000	mm
for empty correction	

Meaning

This function enables the user to offset the difference between the reference level and the measured level (or between ullage value and measured distance). To make an offset effective, input the reference level measured by the dip measurement by using key buttons. The software offsets the dist./meas value with the difference between reference level and measured value.

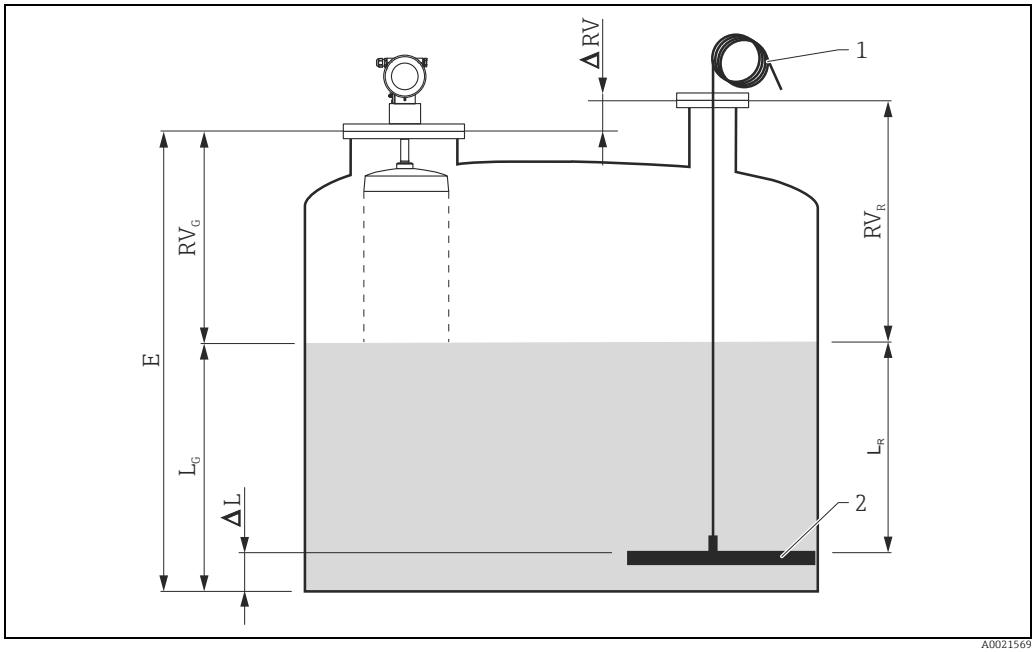

A0021569

1 Dipping
2 Datum plate

ΔL Difference Level
L_G Level (measured)
L_R Level (reference)
E Empty value
ΔRV Difference ullage
RV_G Ullage (measured)
RV_R Ullage (reference)

On-site display
Return to Group Selection

Meaning

After 3 s, the following message appears

Group selection	00→
✔ basic setup	
safety settings	
linearisation	

NOTICE

After the basic setup, an evaluation of the measurement with the aid of the envelope curve (function group "Envelope curve" (0E)) is recommended.

6.4.2 Envelope curve with the device display VU331

After the basic setup, an evaluation of the measurement with the aid of the envelope curve (function group "**envelope curve**" **(0E)**) is recommended.

Function "plot settings" (0E1)

On-site display	
plot settings	0E1
✔ envelope curve	
env.curve+FAC	
env.curve+cust.map.	

Select which information will be displayed in the LCD:
- **Envelope curve**
- Env.curve+FAC (on FAC see BA00341F/00/EN)
- Env.curve+cust.map (i.e. customer tank map is also displayed)

Function "recording curve" (0E2)

This function defines whether the envelope curve is read as a
- **single curve** or
- cyclic.

On-site display	
recording curve	0E2
✔ single curve	
cyclic	

NOTICE

If the envelope curve mode is active on the display, the measured values are updated in a slower cycle time. Thus, it is advisable to leave the envelope curve mode after the measuring point has been optimised.

Function "envelope curve display" (0E3)

The envelope curve is displayed in this function. You can use it to obtain the following information:

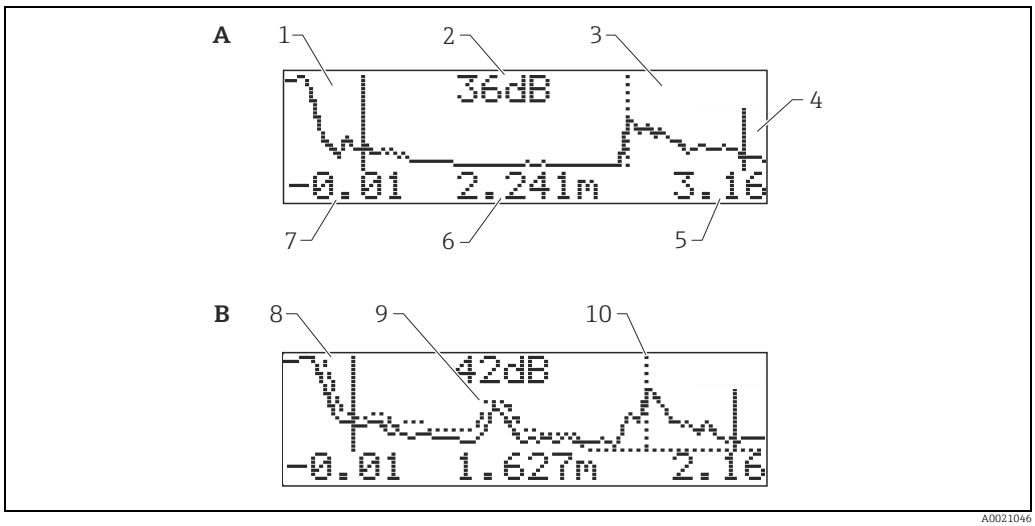

A Envelope curve only
B Envelope curve and interference echo suppression (map)
1 Full calibr.
2 Quality of evaluated echo
3 Evaluated echo is marked
4 Empty calibr.
5 Maximum distance of the plot
6 Distance of the evaluated echo
7 Minimum distance of the plot
8 Map
9 Interference echo
10 Level echo

Navigating in the envelope curve display

Using navigation, the envelope curve can be scaled horizontally and vertically and shifted to the left or the right. The active navigation mode is indicated by a symbol in the top left hand corner of the display.

Horizontal Zoom mode

Firstly, go into the envelope curve display. Then press [+] or [−] to switch to the envelope curve navigation. You are then in Horizontal Zoom mode. Either ⇹ or ⇹ is displayed.
- [+] increases the horizontal scale.
- [−] reduces the horizontal scale.

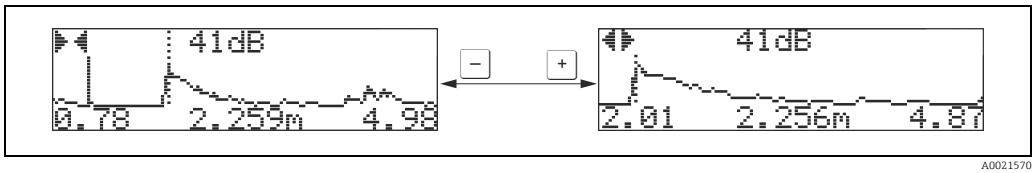

Move mode

Then press E to switch to Move mode. Either ⇶ or ⇷ is displayed.
- + shifts the curve to the right.
- − shifts the curve to the left.

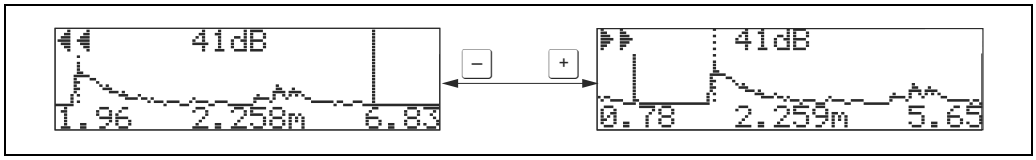

A0021579

Vertical Zoom mode

Press E once more to switch to Vertical Zoom mode. ⇳1 is displayed. You now have the following options.
- + increases the vertical scale.
- − reduces the vertical scale.

The display icon shows the current zoom factor (⇳0 to ⇳3).

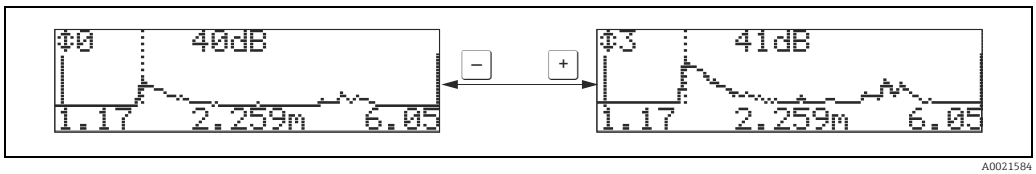

A0021584

Exiting the navigation

- Press E again to run through the different modes of the envelope curve navigation.
- Press + and − to exit the navigation. The set increases and shifts are retained. Only when you reactivate the "**recording curve**" **(0E2)** function does the Micropilot use the standard display again.

On-site display	Meaning
Return to Group Selection	
	After 3 s, the following message appears

Group selection	0E→
✔ envelope curve	
display	
diagnostics	

6.5 Basic Setup with the Endress+Hauser operating program

To carry out the basic setup with the Endress+Hauser operating program, proceed as follows:
- Start the operating program and establish a connection.
- Select the "**basic setup**" function group in the navigation bar.

The following display appears on the screen:

Basic Setup step 1/4:

- Status image
- Enter the measuring point description (TAG number).

Each parameter that is changed must be confirmed with the **RETURN** key!

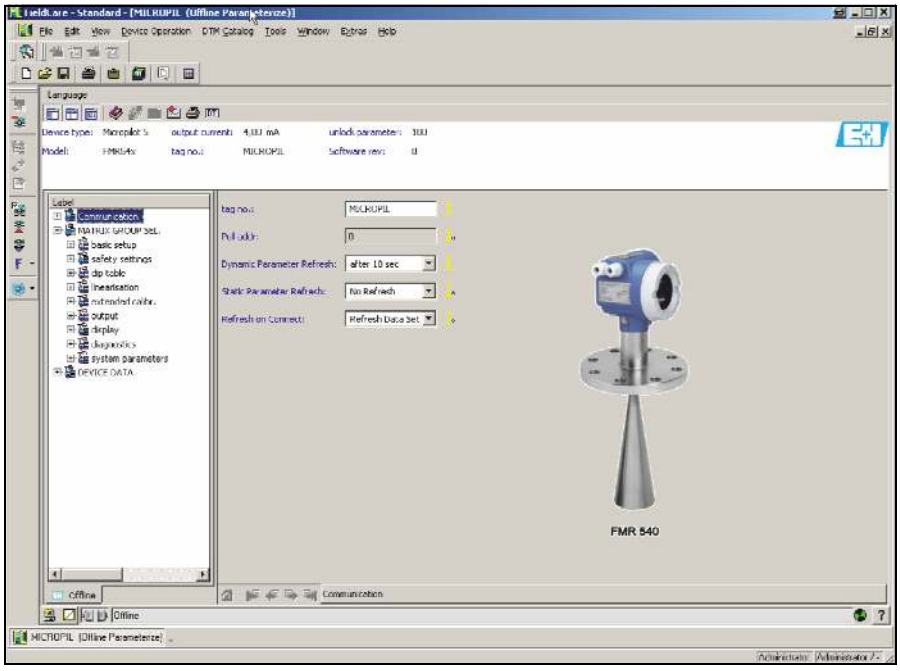

A0020540-EN

- The "**Next**" button moves you to the next screen display:

Basic Setup step 2/5:

- Enter the application parameters:
  - Tank shape
  - Medium property
  - Process cond.

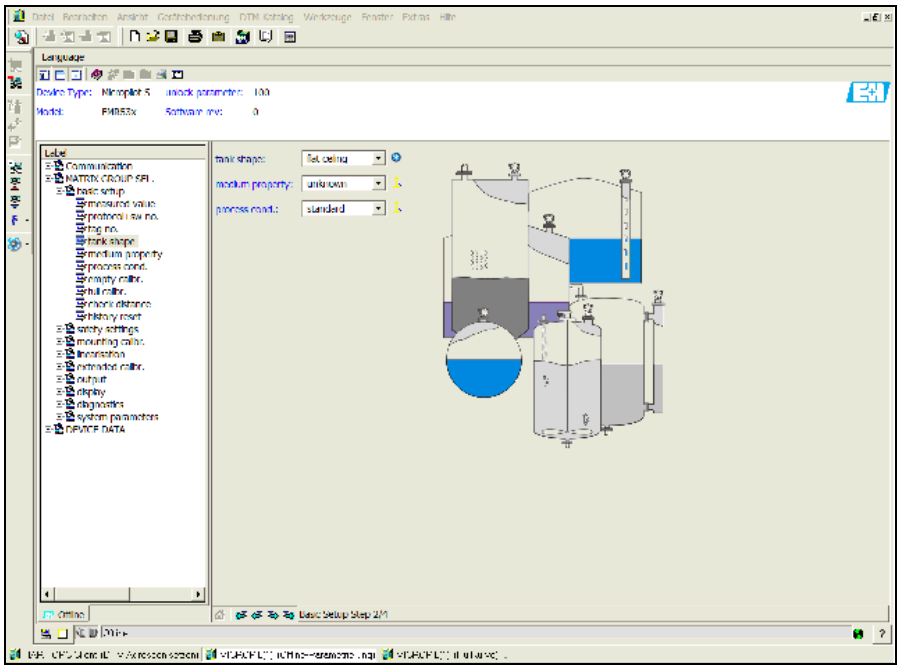

A0021200-EN

Basic Setup step 3/5:

If "**dome ceiling**" is selected in the "**tank shape**" function, the following display appears on the screen:

- Empty calibr.
- Full calibr.

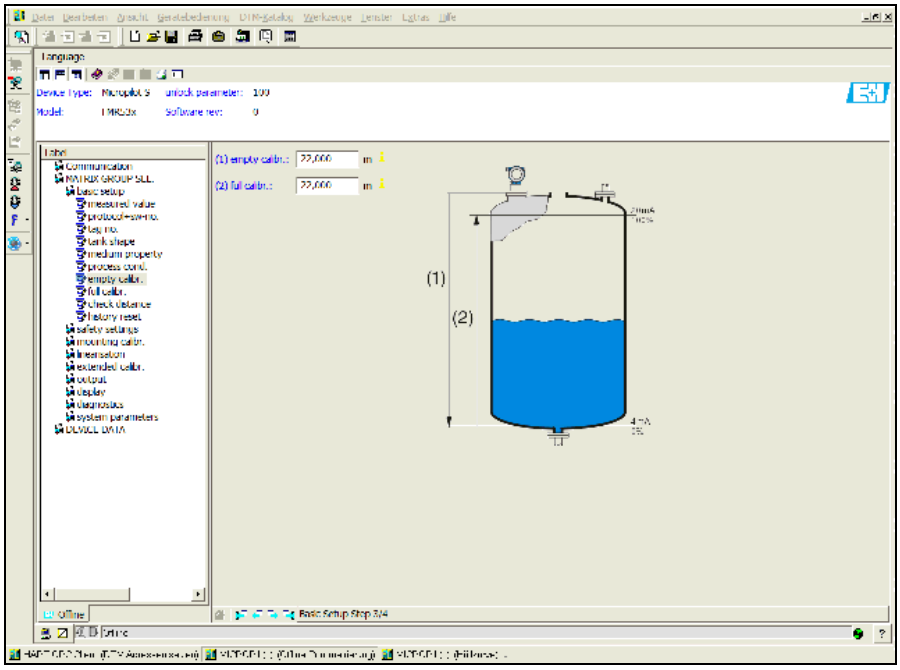

A0021201-EN

If "**horizontal cyl**" or "**sphere**" is selected in the "**tank shape**" function, the following display appears on the screen:
- Empty calibr.
- Full calibr.

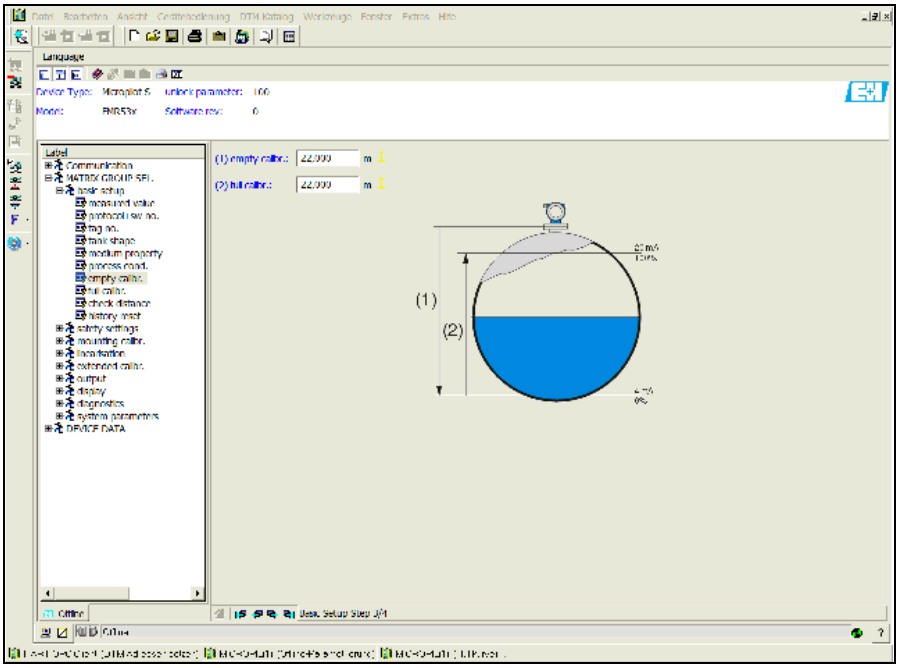

A0021202-EN

If "**stilling well**" or "**bypass**" is selected in the "**tank shape**" function, the following display appears on the screen:
- Empty calibr.
- Full calibr.
- Diameter of bypass / stilling well

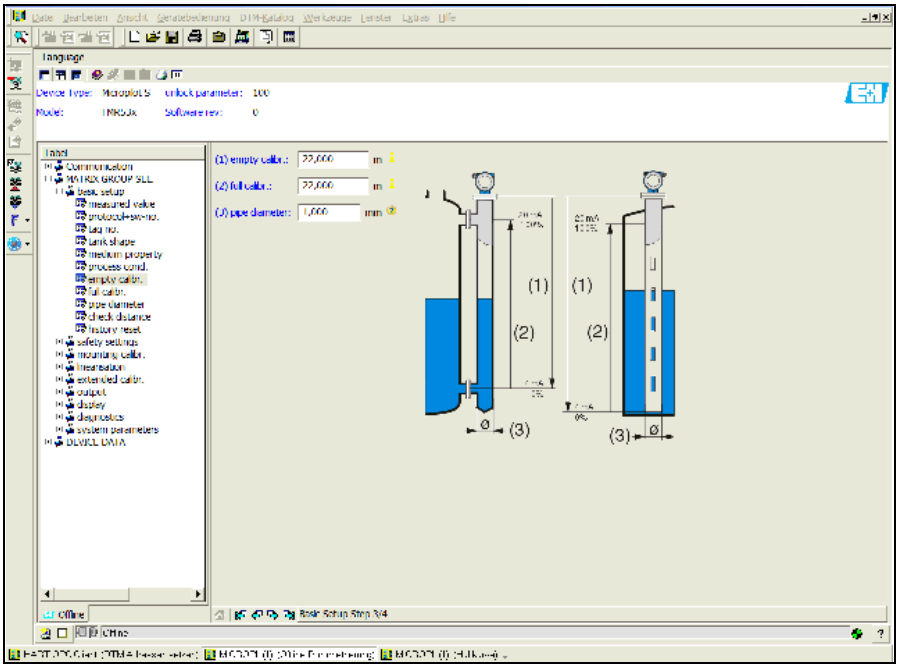

A0021203-EN

NOTICE
You must also specify the pipe diameter in this display.

If "**flat ceiling**" is selected in the "**tank shape**" function, the following display appears on the screen:
- Empty calibr.
- Full calibr.

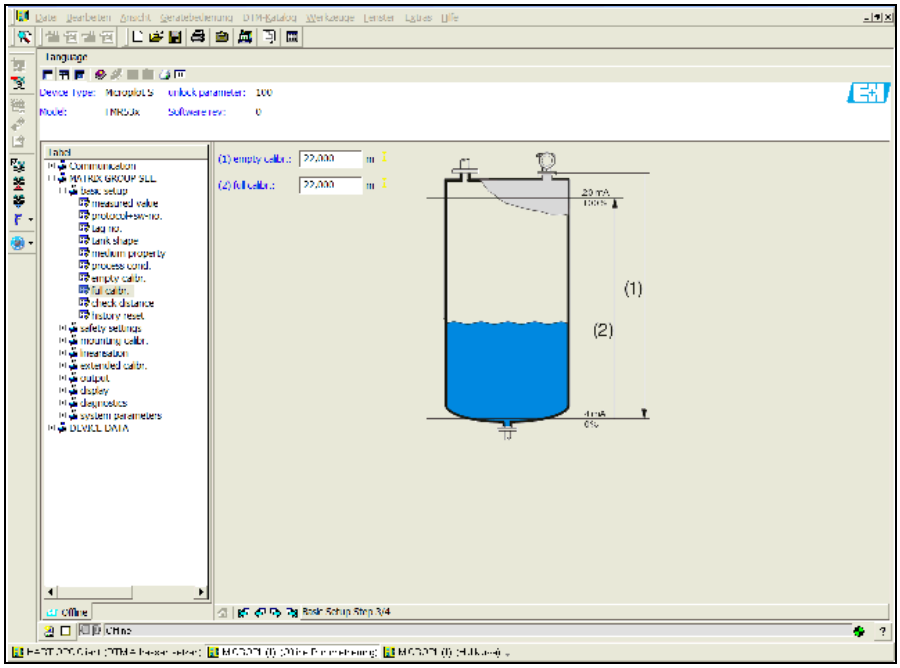

A0021204-EN

Basic Setup step 4/5:

- This step starts the tank mapping
- The measured distance and the current measured value are always displayed in the header
- A description is given, → 51

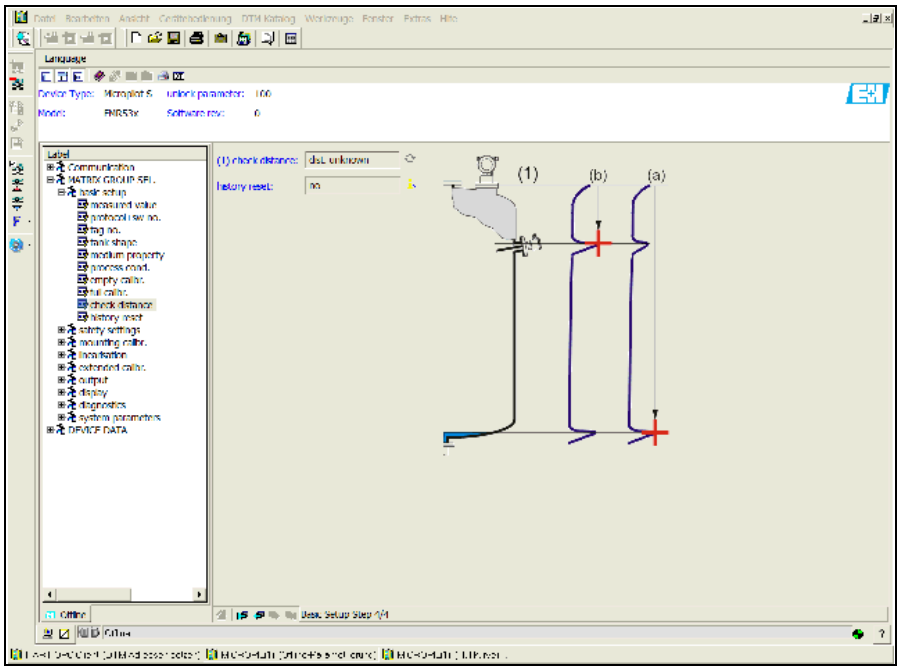

A0021205-EN

6.5.1 Signal analysis via envelope curve

After the basic setup, an evaluation of the measurement using the envelope curve is recommended.

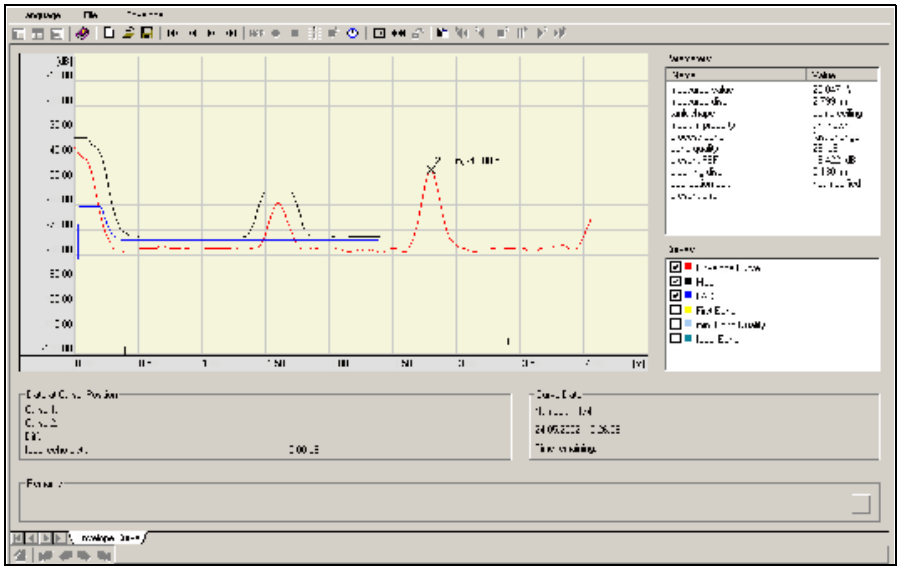

A0021206-EN

6.5.2 User-specific applications (operation)

For details of setting the parameters of user-specific applications, see separate documentation BA00341F/00/EN "Description of Instrument Functions" on the enclosed CD-ROM.

7 Maintenance

The Micropilot S measuring device requires no special maintenance.

7.1 Exterior cleaning

When cleaning the exterior of measuring devices, always use cleaning agents that do not attack the surface of the housing and the seals.

7.2 Replacing seals

The process seals of the sensors must be replaced periodically, particularly if molded seals (aseptic construction) are used. The period between changes depends on the frequency of cleaning cycles and on the temperature of the measured product and the cleaning temperature

7.3 Repairs

The Endress+Hauser repair concept assumes that the measuring devices have a modular design and that customers are able to undertake repairs themselves ("Spare parts", → 70). Please contact Endress+Hauser Service for further information on service and spare parts.

7.4 Repairs to Ex-approved devices

When carrying out repairs to Ex-approved devices, please note the following:
- Repairs to Ex-approved devices may only be carried out by trained personnel or by Endress+Hauser Service.
- Comply with the prevailing standards, national Ex-area regulations, safety instructions (XA) andcertificates.
- Only use original spare parts from Endress+Hauser.
- When ordering a spare part, please note the device designation on the nameplate. Only replaceparts with identical parts.
- Carry out repairs according to the instructions.
  On completion of repairs, carry our the specifiedroutine test on the device.
- Only Endress+Hauser Service may convert a certified device into a different certified variant.
- Document all repair work and conversions.

7.5 Replacement

After a complete Micropilot or electronic module has been replaced, the parameters can be downloaded into the device again via the communication interface. Prerequisite to this is that the data were uploaded to the PC beforehand using FieldCare.
Measurement can continue without having to carry out a new setup.

With a complete download of parametrization,
- you may have to activate linearisation (see BA00341F/00/EN on the enclosed CD-ROM)
- you may need to record the tank map again (see Basic Setup)

After an antenna component or electronic has been replaced, a new calibration must be carried out. This is described in the repair instructions.

8 Accessories

Various accessories, which can be ordered separately from Endress+Hauser, are available for the Micropilot S.

8.1 Weather protection cover

A weather protective cover made of stainless steel is available for outdoor mounting (order code: 543199-0001). The shipment includes the protective cover and tension clamp.

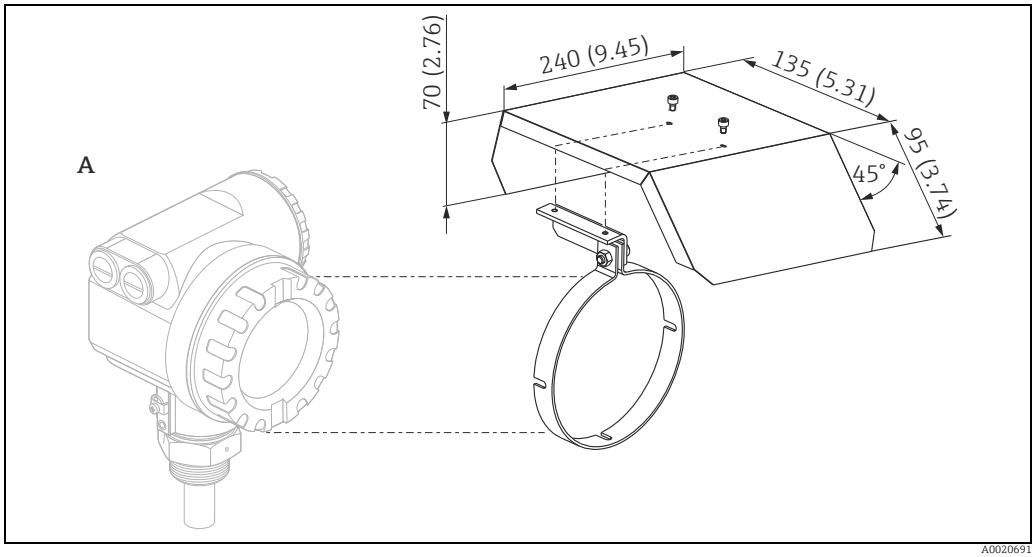

A T12 housing

8.2 Sensor alignment tool for alignment device

A sensor alignment tool (1) is recommended to be used at the time of installation for FMR540 with alignment device (3).
Order code: 52026756

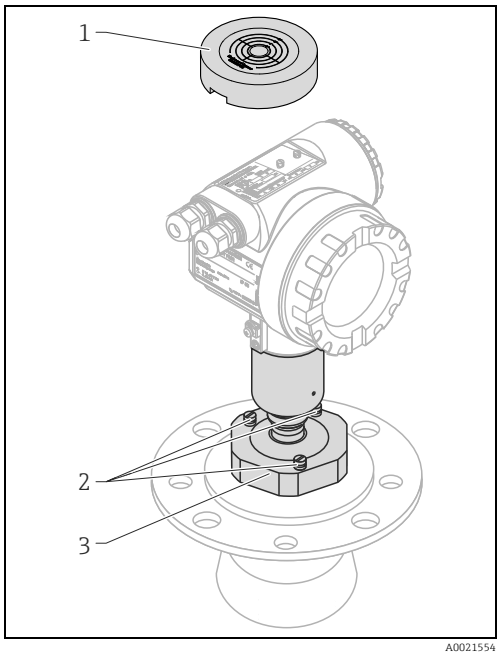

1 Alignment tool
2 Flange bolts
3 Alignment device

8.3 Commubox FXA195 HART

For intrinsically safe communication with FieldCare via the USB interface.
For details refer to TI00404F/00/EN.

8.4 Commubox FXA291

The Commubox FXA291 connects Endress+Hauser field devices with CDI interface (= Endress+Hauser Common Data Interface) to the USB interface of a personal computer or a notebook. For details refer to TI00405C/07/EN.

For the device you need the "ToF Adapter FXA291" as an additional accessory.

8.5 ToF Adapter FXA291

The ToF Adapter FXA291 connects the Commubox FXA291 via the USB interface of a personal computer or a notebook to the device. For details refer to KA00271F/00/A2.

8.6 Field Xpert

Compact, flexible and robust industry handheld terminal for remote parametrization and measured value inspection via the HART output or via FOUNDATION Fieldbus.
For details refer to Operating Instructions BA00060S/04/EN.

9 Trouble-shooting

9.1 Trouble-shooting instructions

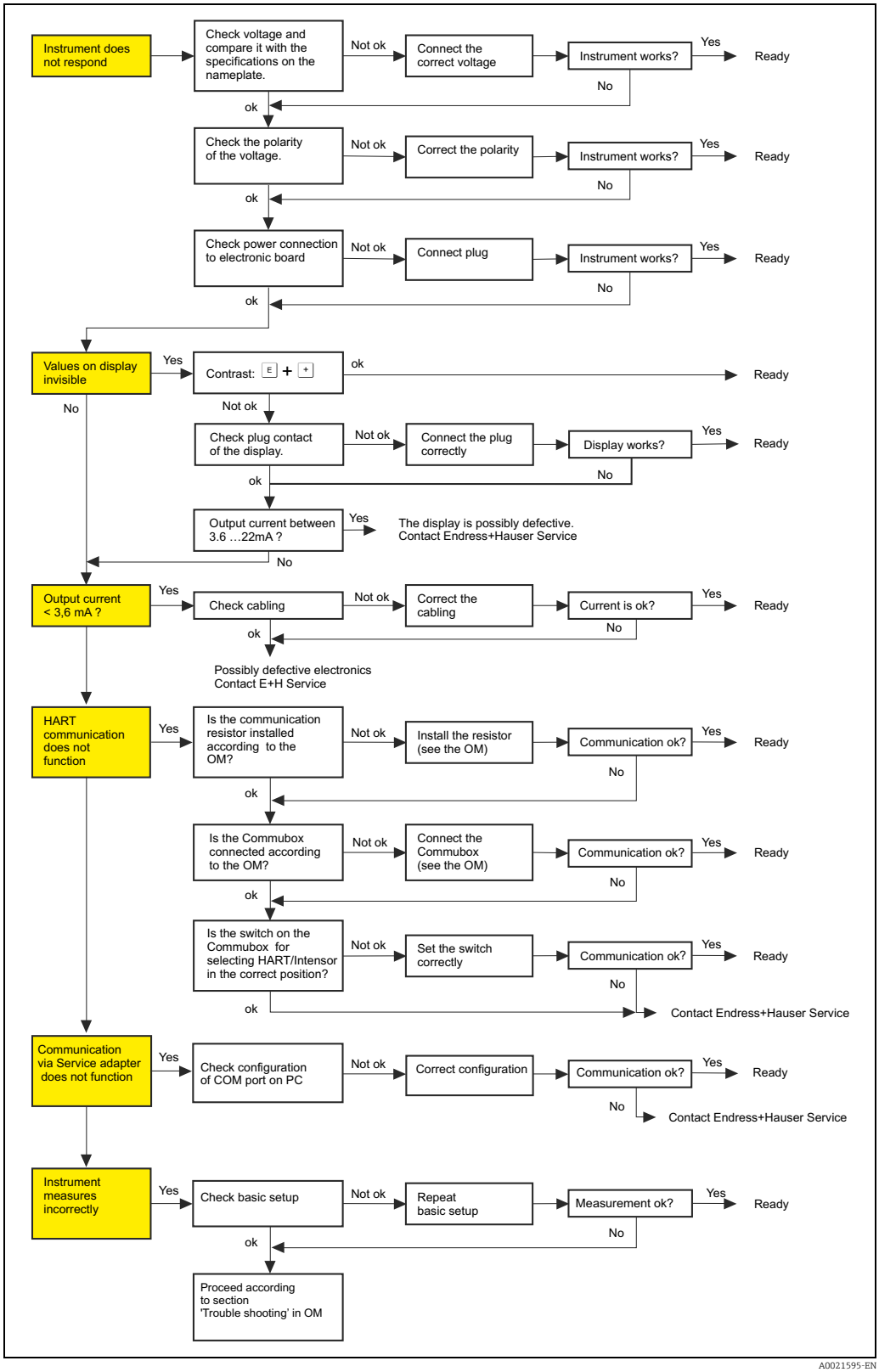

A0021595-EN

9.2 System error messages

Code	Description	Possible cause	Remedy
A102	checksum error general reset & new calibr.required	device has been powered off before data could be stored; emc problem; EEPROM defect	reset; avoid emc problem; if alarm prevails after reset, exchange electronics
W103	initialising - please wait	EEPROM storage not yet finished	wait some seconds; if warning prevails, exchange electronics
A106	downloading please wait	processing data download	wait until warning disappears
A110	checksum error general reset & new calibr.required	device has been powered off before data could be stored; emc problem; EEPROM defect	reset; avoid emc problem; if alarm prevails after reset, exchange electronics
A111	electronics defect	RAM defective	reset; if alarm prevails after reset, exchange electronics
A113	electronics defect	RAM defective	reset; if alarm prevails after reset, exchange electronics
A114	electronics defect	EEPROM defect	reset; if alarm prevails after reset, exchange electronics
A115	electronics defect	general hardware problem	reset; if alarm prevails after reset, exchange electronics
A116	download error repeat download	checksum of stored data not correct	restart download of data
A121	electronics defect	no factory calibration existant; EEPROM defective	contact service
W153	initialising - please wait	initialisation of electronics	wait some seconds; if warning prevails, power off device and power on again
A155	electronics defect	hardware problem	reset; if alarm prevails after reset, exchange electronics
A160	checksum error general reset & new calibr.required	device has been powered off before data could be stored; emc problem; EEPROM defect	reset; avoid emc problem; if alarm prevails after reset, exchange electronics
A164	electronics defect	hardware problem	reset; if alarm prevails after reset, exchange electronics
A171	electronics defect	hardware problem	reset; if alarm prevails after reset, exchange electronics
A231	sensor 1 defect check connection	HF module or electronics defective	exchange HF module and electronics
A270	Custody switch out of check position	Switch for custody transfer may be defective	check position of custody switch; exchange electronics
W511	no factory calibration ch1	factory calibration has been deleted	record new factory calibration
W512	recording of mapping please wait	mapping active	wait some seconds until alarm disappears

Code	Description	Possible cause	Remedy
W601	linearisation ch1 curve not monotone	linearization not monotonously increasing	correct linearisation table
W611	less than 2 linearisation points for channel 1	number of entered linearization points < 2	correct linearisation table
W621	simulation ch. 1 on	simulation mode is active	switch off simulation mode
E641	no usable echo channel 1 check calibr.	echo lost due to application conditions or built up on antenna	check installation; optimize orientation of antenna; clean antenna (cf. Operating Instrcutions)
E651	level in safety distance - risk of overspill	level in safety distance	alarm will disappear as soon as level leaves safety distance;
A671	linearisation ch1 not complete, not usable	linearisation table is in edit mode	activate linearisation table
W681	current ch1 out of range	current out of range (3.8 mA to 20.5 mA)	check calibration and linearisation

9.3 Application errors

Error	Output	Possible cause		Remedy
A warning or alarm has occurred	Depending on the configuration	See table of error messages (→ 66)		1. See table of error messages (→ 66)
Measured value (00) is incorrect	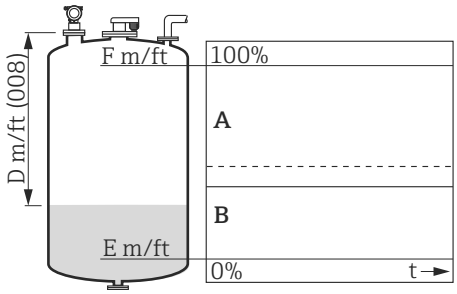 *A Expected B Actual*	Measured distance (008) OK?	yes →	1. Check empty calibr. (005) and full calibr. (006). 2. Check linearisation: → level/ullage (040) → max. scale (046) → diameter vessel (047) → Check table 3. Check dip table
		no ↓		
		An interference echo may have been evaluated.	yes →	1. Carry out tank mapping → basic setup 2. Is the pipe diameter (007) correct?
		no ↓		
		Customise the measurement with help of dip table		
No change off measured value on filling/emptying	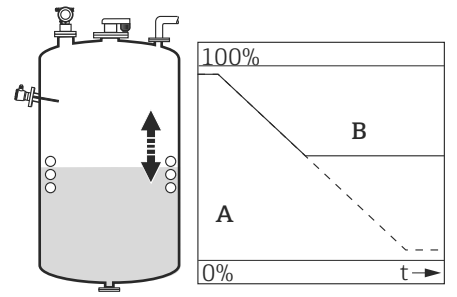 *A Expected B Actual*	Interference echo from installations, nozzle or extension on the antenna		1. Carry out tank mapping → basic setup 2. If necessary, clean antenna 3. If necessary, select better mounting position

Error	Output	Possible cause		Remedy
If the surface is not calm (e.g. filling, emptying, agitator running), the measured value jumps sporadically to a higher level	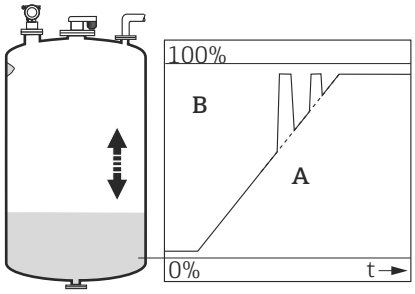 *A Expected B Actual* 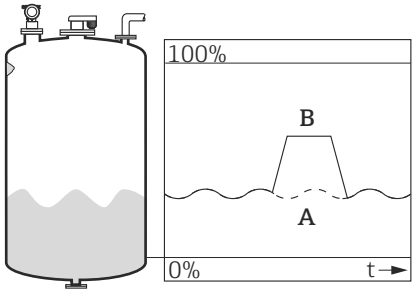 *A Expected B Actual*	Signal is weakened by the rough surface – the interference echoes are sometimes stronger		1. Carry out tank mapping → basic setup 2. Set the process cond. (004) to "turb. surface" or "agitator" 3. Increase the output damping (058) 4. If necessary, select a better mounting position and/or larger antenna
During filling/ emptying the measured value jumps ownwards	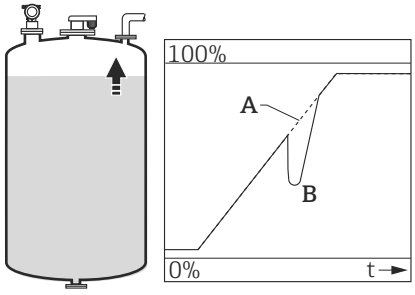 *A Expected B Actual*	Multiple echoes	yes →	1. Check the tank shape (002), e.g. "dome ceiling" or "horizontal cyl" 2. In the range of the blocking dist. (059) there is no echo evaluation → Adapt the value 3. If possible, do not select central installation position
E641 (lost of echo)	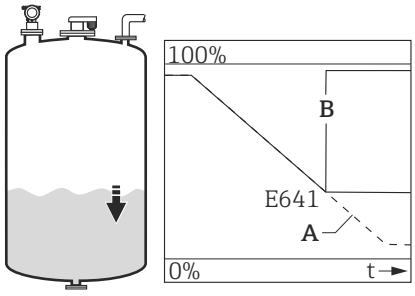 *A Expected B Actual*	Level echo is too weak. Possible causes: ▪ Rough surface due to filling/ emptying ▪ Agitator running ▪ Foam	yes →	1. Check application parameters (002), (003) and (004) 2. If necessary, select a better installation position and/or larger antenna

9.4 Spare parts

- A few interchangeable measuring device components are identified by a spare part nameplate.This contains information about the spare part.
- The connection compartment cover of the device contains a spare part nameplate that includes the following information:
  - A list of the most important spare parts for the measuring device, including their orderinginformation.
  - The URL for the W@M Device Viewer (www.endress.com/deviceviewer):
    There, all spare parts for the measuring device are listed, including the order code, and can be ordered. If available, the corresponding Installation Instructions can also be downloaded there.

Measuring device serial number:
- Is located on the device and spare part nameplate.
- Can be read out via the "Serial number" parameter in the "Device information" submenu..

9.5 Return

The following procedures must be carried out before a transmitter is sent to Endress+Hauser e.g. for repair or calibration:
- Remove all residue which may be present. Pay special attention to the gasket grooves and crevices where fluid may be present. This is especially important if the fluid is dangerous to health, e.g. corrosive, poisonous, carcinogenic, radioactive, etc.
- Always enclose a duly completed "Declaration of contamination" form (a copy of the "Declaration of contamination" is included at the end of this operating manual).
  Only then can Endress +Hauser transport, examine and repair a returned device.
- Enclose special handling instructions if necessary, for example a safety data sheet as per EN 91/155/EEC.

Additionally specify:
- An exact description of the application.
- The chemical and physical characteristics of the product.
- A short description of the error that occurred (specify error code if possible)
- Operating time of the device.

9.6 Disposal

In case of disposal please seperate the different components according to their material consistence.

9.7 Software history

Date	Software version	Software changes	Documentation changes
10.2006	V 01.01.00	Original software. Operated via: – ToF Tool from version 4.6 – HART communicator DXR375 with Rev. 1, DD 1.	
07.2009	V 01.01.02	Adaptation parabolic antenna	

9.8 Contact addresses of Endress+Hauser

The addresses of Endress+Hauser are given on the back cover of this operating manual. If you have any questions, please do not hesitate to contact your Endress+Hauser representative.

10 Technical data

10.1 Additional technical data

For the technical data, please refer to the Technical Information TI00412F/00/EN.

10.1.1 Supplementary Documentation

Supplementary Documentation

- Technical Information (TI00412F/00/EN)
- Operating Instructions "Description of Instrument functions" (BA00341F/00/EN)
- Brief Operating Instructions (KA01059F/00/EN)
- Certificate "German WHG" (ZE00243F/00/DE)

11 Appendix

11.1 Operating menu HART (display modul)

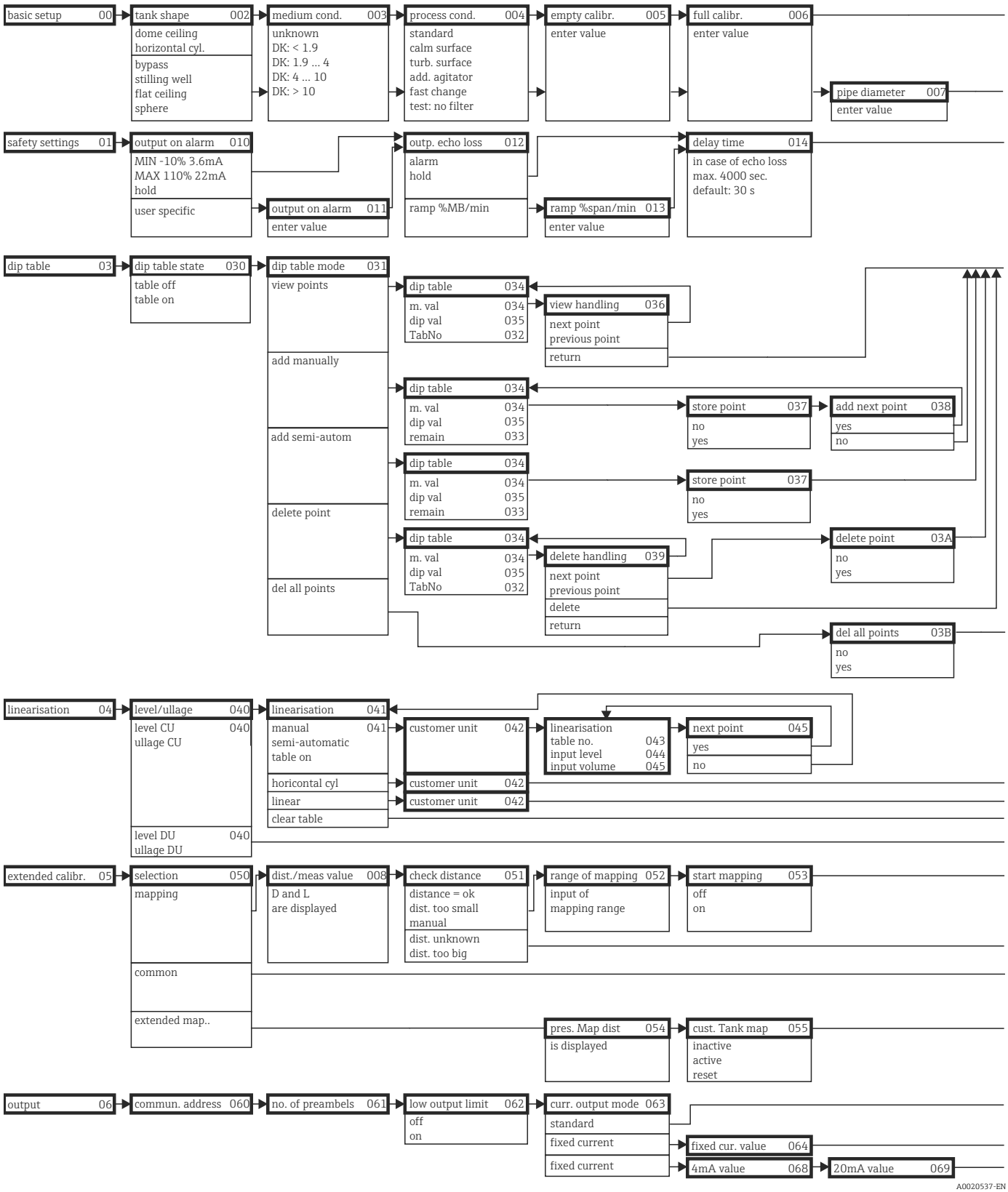

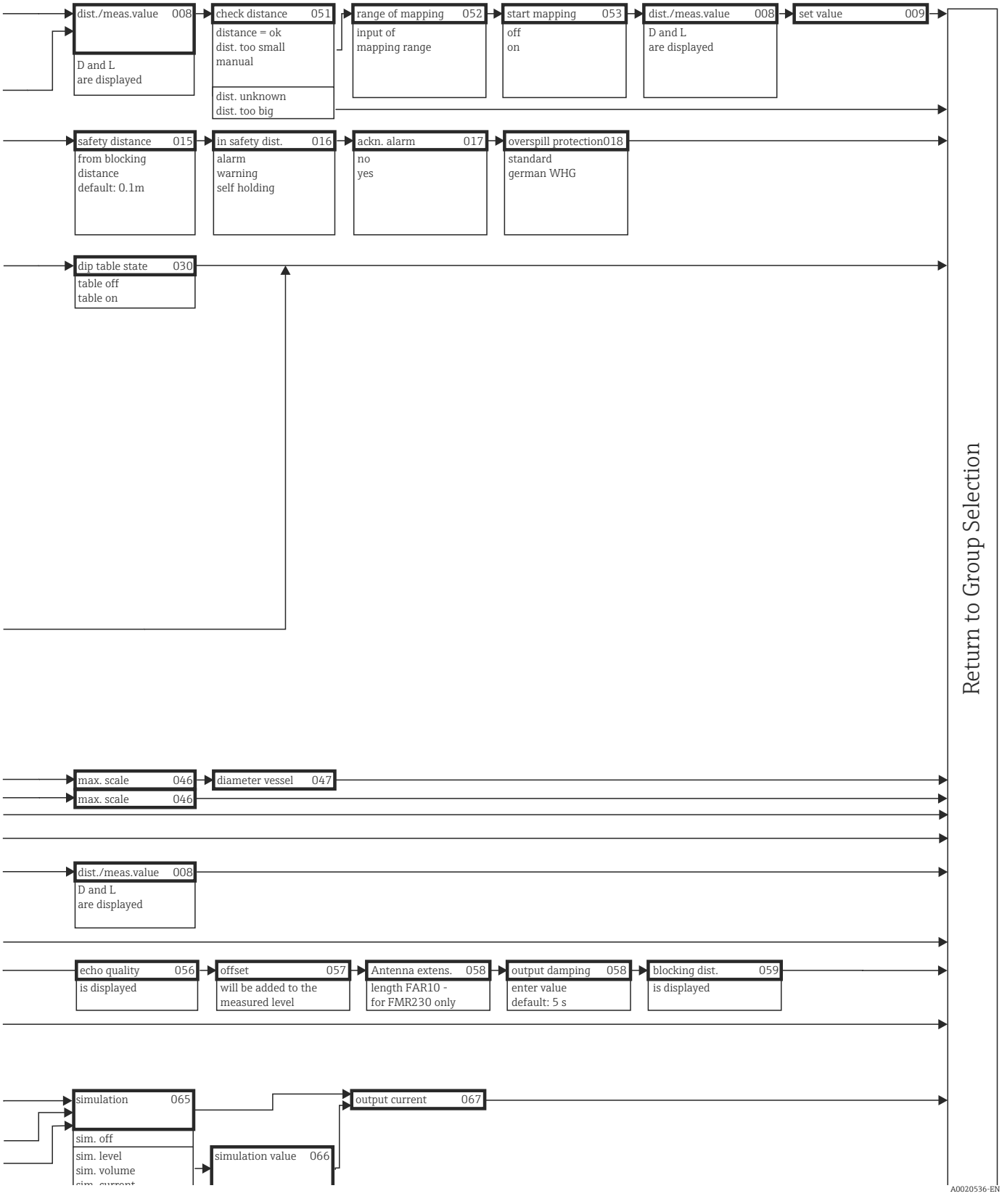
dist./meas.value 008
D and L
are displayed
check distance 051
distance = ok
dist. too small
manual
dist. unknown
dist. too big
range of mapping 052
input of
mapping range
start mapping 053
off
on
dist./meas.value 008
D and L
are displayed
set value 009
safety distance 015
from blocking
distance
default: 0.1m
in safety dist. 016
alarm
warning
self holding
ackn. alarm 017
no
yes
overspill protection 018
standard
german WHG
dip table state 030
table off
table on
Return to Group Selection
max. scale 046
diameter vessel 047
max. scale 046
dist./meas.value 008
D and L
are displayed
echo quality 056
is displayed
offset 057
will be added to the
measured level
Antenna extens. 058
length FAR10 -
for FMR230 only
output damping 058
enter value
default: 5 s
blocking dist. 059
is displayed
simulation 065
sim. off
sim. level
sim. volume
simulation value 066
output current 067
A0020536-EN

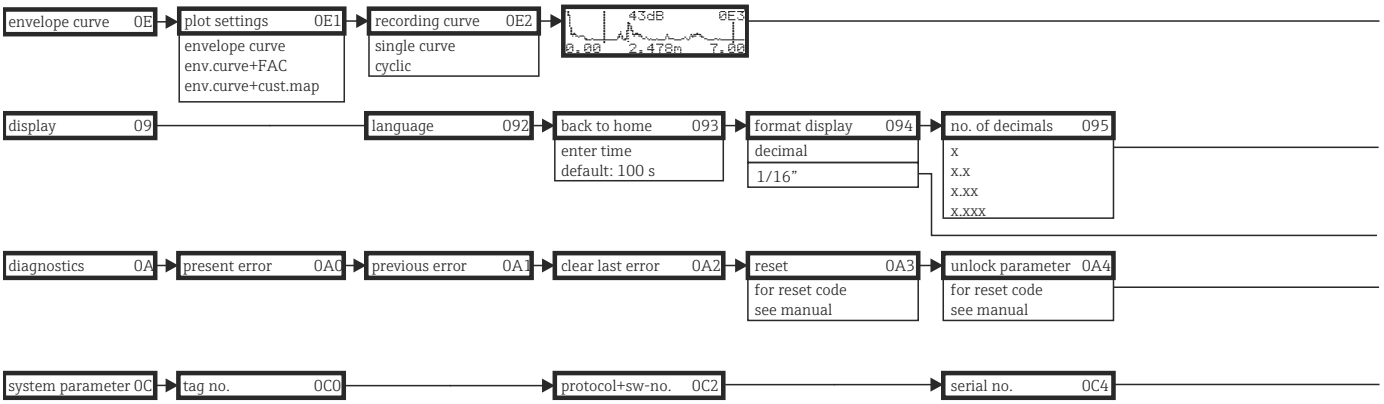

Note! The default values of the parameters are typed in boldface.

A0020532-EN

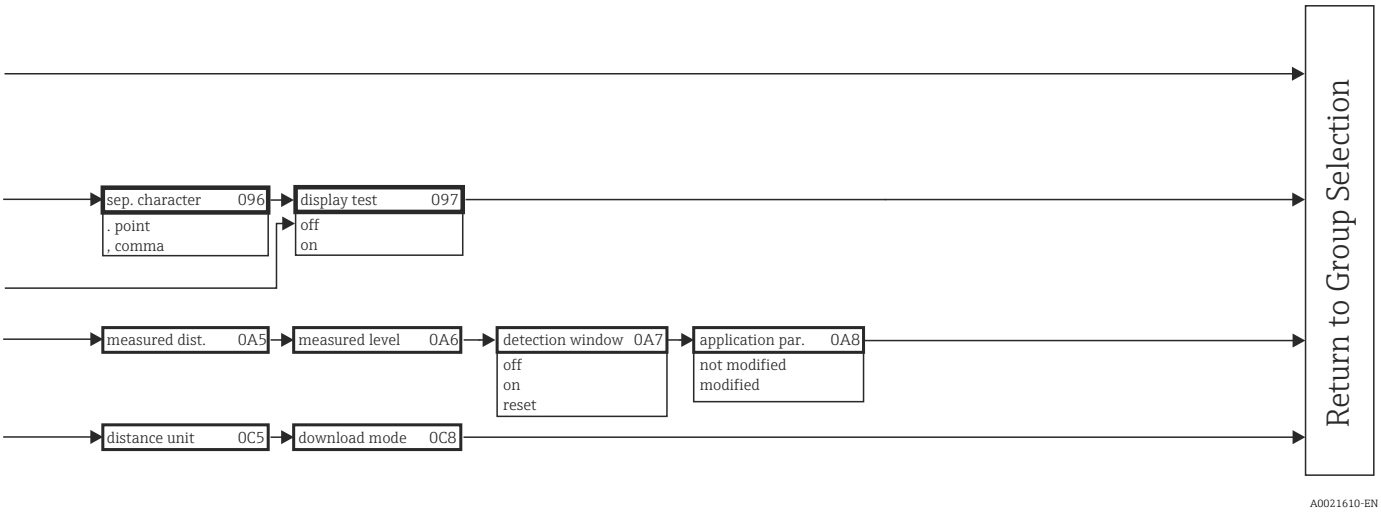
sep. character 096
. point
, comma
display test 097
off
on
measured dist. 0A5
measured level 0A6
detection window 0A7
off
on
reset
application par. 0A8
not modified
modified
distance unit 0C5
download mode 0C8
Return to Group Selection

A0021610-EN

Index

A
Accessories 63
Air purge 21
Alarm 33, 38
Application errors 68

B
Basic setup 43, 45, 57
Beam angle 12

C
Cable entry 26
CE mark 9
Commissioning 42
Commubox 28, 64
Connection 28
Current consumption 26
Custody locking switch 34

D
Declaration of conformity 9
Declaration of contamination 70
Degree of protection 29
Designated use 4
Display 32
Disposal 71
Distance 43, 50–51

E
Empty calibration 43, 48
Engineering hints 11
Envelope curve 54, 61
Equipotential bonding 29
Error messages 38
Exterior cleaning 62

F
Field Communicator 475 28
Field Xpert 64
Field Xpert SFX 28
Full calibration 43, 49
Function groups 31
Functions 31

G
Green LED 33

H
Hardware lock 35
Hardware unlock 36
HART 28, 39

I
Installation 10
Installation in stilling well 10
Installation in vessel 10, 15
Interference echo suppression 60

K
Key assignment 34

L
Level 43

M
Maintenance 62
Mapping 51–52
Measuring conditions 13
Media group 14
Medium property 46

N
Nameplate 7

O
Operating menu 30–31
Operation 30, 35
Operational safety and process safety 4
Orientation 10

P
Pipe diameter 50
Poduct class 14
Power consumption 26
Process conditions 47, 58

R
Red LED 33
Repairs 62
Repairs to Ex-approved devices 62
Replacement 62
Replacing seals 62
Reset 37
Return 70
RN221N 28

S
Safety conventions and symbols 5
Safety distance 43
Safety instructions 4
Service Interface FXA291 64
Software history 71
Supply voltage 26
System error messages 66

T
T12 housing 25
Tag 58
Tank installations 11
Tank shape 45
Technical Data 72
Top target positioner 18, 23
Trouble-shooting 65
Turn housing 21

U

Unlock parameter 35–36

V

VU331. . . . . 45, 54

W

Warning 38
Weather protection cover. 63
Wiring. 24



www.addresses.endress.com

Endress+Hauser

People for Process Automation