BA 360C/07/en/01.03
51512324
Valid of:
Software version 5.0

StamoLys CA 71 FE
Iron Analyzer



Operating Instructions

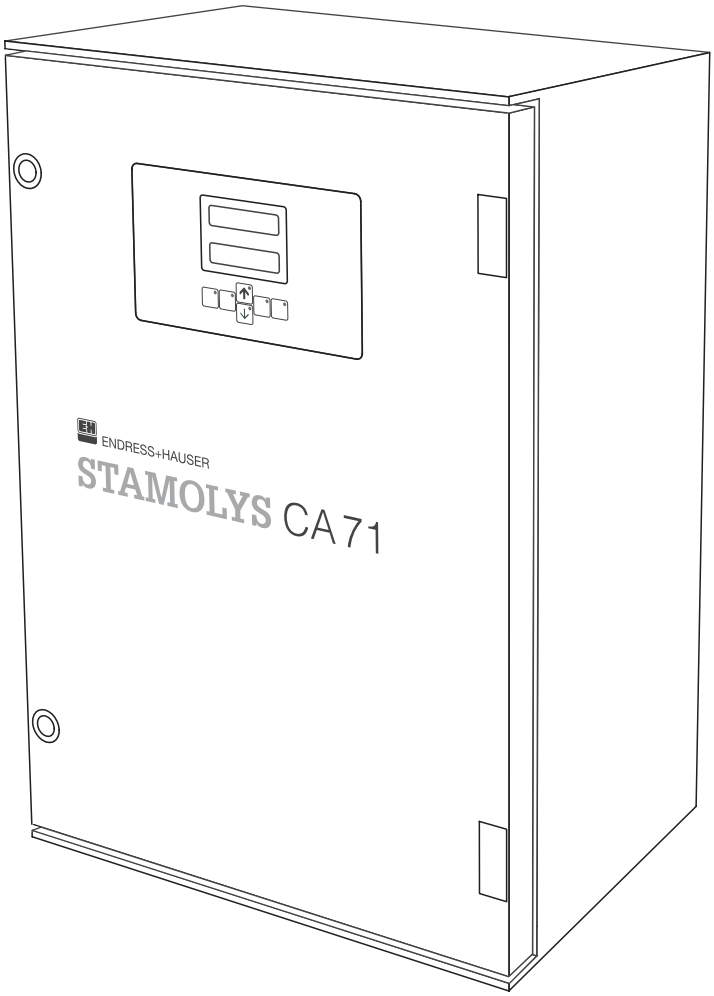

Quality made by
Endress+Hauser

ISO 9001

Endress + Hauser
The Power of Know How

Table of contents

1 Safety instructions 4

1.1 Designated use 4
1.2 Installation, commissioning and operation . . . 4
1.3 Operational safety 4
1.4 Return 4
1.5 Notes on safety icons and symbols 5

2 Identification 6

2.1 Device designation 6
2.2 Scope of delivery 7
2.3 Certificates and approvals 7

3 Installation 8

3.1 Incoming acceptance, transport, storage 8
3.2 Installation conditions 8
3.3 Installation instructions 11
3.4 Installation examples 12
3.5 Post-installation check 12

4 Wiring 13

4.1 Electrical connection 13
4.2 Signal connection 15
4.3 Switching contacts 16
4.4 Serial interface 17
4.5 Post-connection check 18

5 Operation 19

5.1 Operation and commissioning 19
5.2 Display and operating elements 19
5.3 Local operation 19
5.4 Calibration 26

6 Commissioning 28

6.1 Function check 28
6.2 Switch-on 28

7 Maintenance 30

7.1 Maintenance schedule 30
7.2 Replacing reagents 31
7.3 Replacing pump hoses 32
7.4 Replacing valve hoses 32
7.5 Replacing the static mixer 33
7.6 Replacing the photometer optical cell 33
7.7 Cleaning 34
7.8 Placing out of service 34

8 Accessories 35

8.1 Collecting vessel 35
8.2 Reagents, cleaner, standard solution 35
8.3 Hose cleaner 35
8.4 Additional accessories 35

9 Trouble-shooting 36

9.1 Trouble-shooting instructions 36
9.2 System error messages 36
9.3 Process errors without messages 37
9.4 Spare parts 38
9.5 Return 39
9.6 Disposal 39

10 Technical data 40

10.1 Input 40
10.2 Output 40
10.3 Power supply 40
10.4 Performance characteristics 41
10.5 Environment 41
10.6 Process 41
10.7 Mechanical construction 41

11 Appendix 42

11.1 Operating matrix 42
11.2 Ordering forms 46
11.3 Analyzer settings 48
11.4 Maintenance schedule 50

Index 53

1 Safety instructions

1.1 Designated use

The analyzer is a compact photometric analysis system.
It is designed for the almost continuous monitoring of the iron content in drinking water and wastewater treatment plants.

In particular, the analyzer is intended for:
- residual iron monitoring after precipitation, flocculation and filtration processes
- iron containing process water monitoring

Any other use than the one described here compromises the safety of persons and the entire measuring system and is, therefore, not permitted.
The manufacturer is not liable for damage caused by improper or non-designated use.

1.2 Installation, commissioning and operation

Please note the following items:
- Installation, electrical connection, commissioning, operation and maintenance of the measuring system must only be carried out by trained technical personnel.
  The technical personnel must be authorised for the specified activities by the system operator.
- Technical personnel must have read and understood these Operating Instructions and must adhere to them.
- Before commissioning the entire measuring point, check all the connections for correctness. Ensure that electrical cables and hose connections are not damaged.
- Do not operate damaged products and secure them against unintentional commissioning. Mark the damaged product as being defective.
- Measuring point faults may only be rectified by authorised and specially trained personnel.
- If faults can not be rectified, the products must be taken out of service and secured against unintentional commissioning.
- Repairs not described in these Operating Instructions may only be carried out at the manufacturer's or by the Endress+Hauser service organisation.

1.3 Operational safety

The analyzer has been designed and tested according to the state of the art and left the factory in perfect functioning order.
Relevant regulations and European standards have been met.

As the user, you are responsible for complying with the following safety conditions:
- Installation instructions
- Local prevailing standards and regulations.

1.4 Return

If the analyzer has to be repaired, please return it *cleaned* to the Endress+Hauser sales centre responsible.
Please use the original packaging, if possible.

Please enclose the completed Dangerous Goods sheet (copy the second last page of these Operating instructions) with the packaging and also the shipping documents.

1.5 Notes on safety icons and symbols



Warning!
This symbol alerts you to hazards. They can cause serious damage to the instrument or to persons if ignored.



Caution!
This symbol alerts you to possible faults which could arise from incorrect operation. They could cause damage to the instrument if ignored.



Note!
This symbol indicates important items of information.

2 Identification

2.1 Device designation

2.1.1 Nameplate

Check the order code on the nameplate (at the analyzer) with the product structure (see below) and your order.

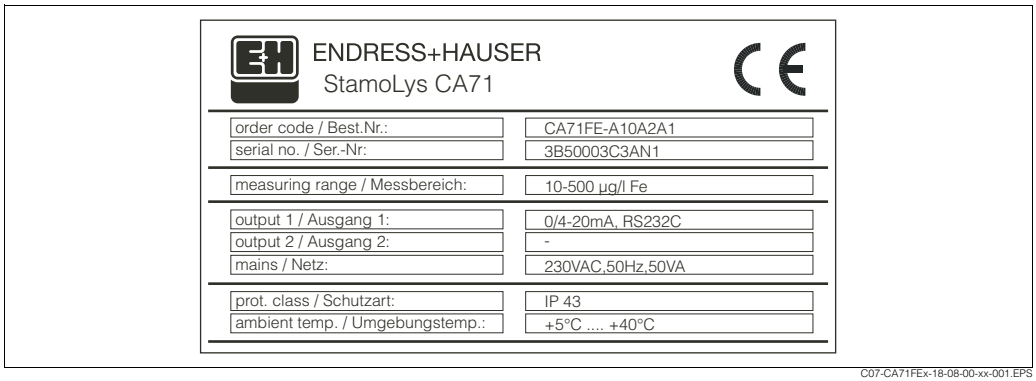

Fig. 1: Example of a nameplate

2.1.2 Product structure

	Measuring range							
	A	Measuring range 10 ... 500 µg/l Fe						
	B	Measuring range 0.05 ... 2 mg/l Fe						
	C	Measuring range 0.1 ... 5 mg/l Fe						
	Y	Special version acc. to customers specification						
		Sample transfer						
		1	Sample transfer from one measuring point (one-channel version)					
		2	Sample transfer from two measuring points (two-channel version)					
			Power supply					
			0	Power supply 230 V AC / 50 Hz				
			1	Power supply 115 V AC / 60 Hz				
				Collecting vessel for up to 3 analyzers				
				A	Without collecting vessel			
				B	With collecting vessel without level measurement			
				C	With collecting vessel with level measurement (one-channel version only)			
					Housing version			
					1	Without housing		
					2	With GFK housing		
					3	With stainless steel 1.4301 (AISI 304) housing		
						Communication		
						A	0/4 ... 20 mA, RS 232	
							Additional equipment	
							1	Quality certificate
CA 71 FE -								**complete order code**

2.2 Scope of delivery

The scope of delivery comprises:
- an analyzer with mains plug
- a cleaning injector
- a tin of silicone spray
- a Nopren hose, length 2.5 m (8.2 ft), ID 1.6 mm (0.06")
- a C-flex hose, length 2.5 m (8.2 ft), ID 6.4 mm (0.25")
- a C-flex hose, length 2.5 m (8.2 ft), ID 3.2 mm (0.12")
- two hose fittings of each size:
  – 1.6 x 1.6 mm (0.06 x 0.06")
  – 1.6 x 3.2 mm (0.06 x 0.12")
  – 6.4 x 3.2 mm (0.25 x 0.12")
- an interference suppressor for the current output
- 4 edge covers
- a quality certificate
- Operating Instructions (english).



Note!
Reagents, please order separately.

2.3 Certificates and approvals

2.3.1 CE approval

Declaration of conformity
The product meets the legal requirements of the harmonised European standards. Endress+Hauser confirms compliance with the standards by affixing the CE symbol.

2.3.2 Manufacturer certificate

Quality certificate
With the certificate Endress+Hauser confirms compliance with all technical regulations and the successful testing individually for your product.

3 Installation

3.1 Incoming acceptance, transport, storage

- Make sure the packaging is undamaged!
  Inform the supplier about damage to the packaging.
  Keep the damaged packaging until the matter has been settled.
- Make sure the contents are undamaged!
  Inform the supplier about damage to the delivery contents.
  Keep the damaged products until the matter has been settled.
- Check that the scope of delivery is complete and agrees with your order and the shipping documents.
- The packaging material used to store or to transport the product must provide shock protection and humidity protection. The original packaging offers the best protection. Also, keep to the approved ambient conditions (see "Technical data").
- If you have any questions, please contact your supplier or your Endress+Hauser sales centre responsible (see back page of these Operating Instructions).

3.2 Installation conditions

3.2.1 Design, dimensions

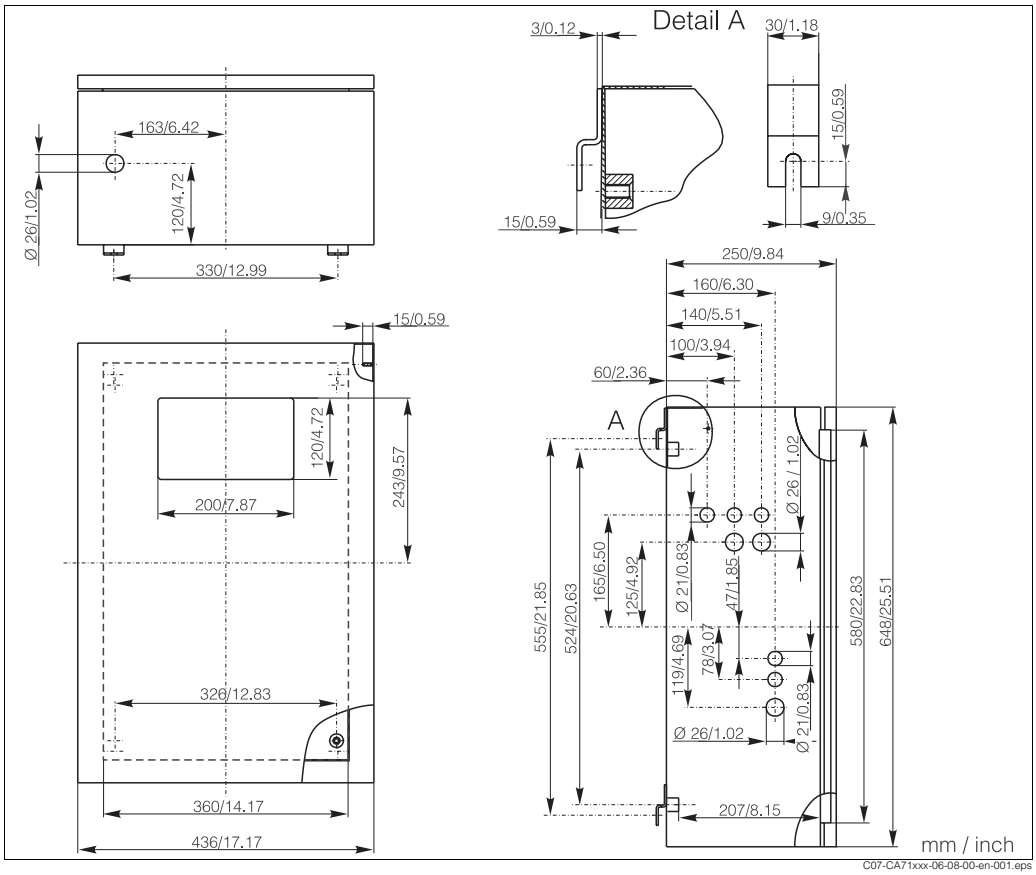

Fig. 2: CA 71 dimensions, stainless steel version

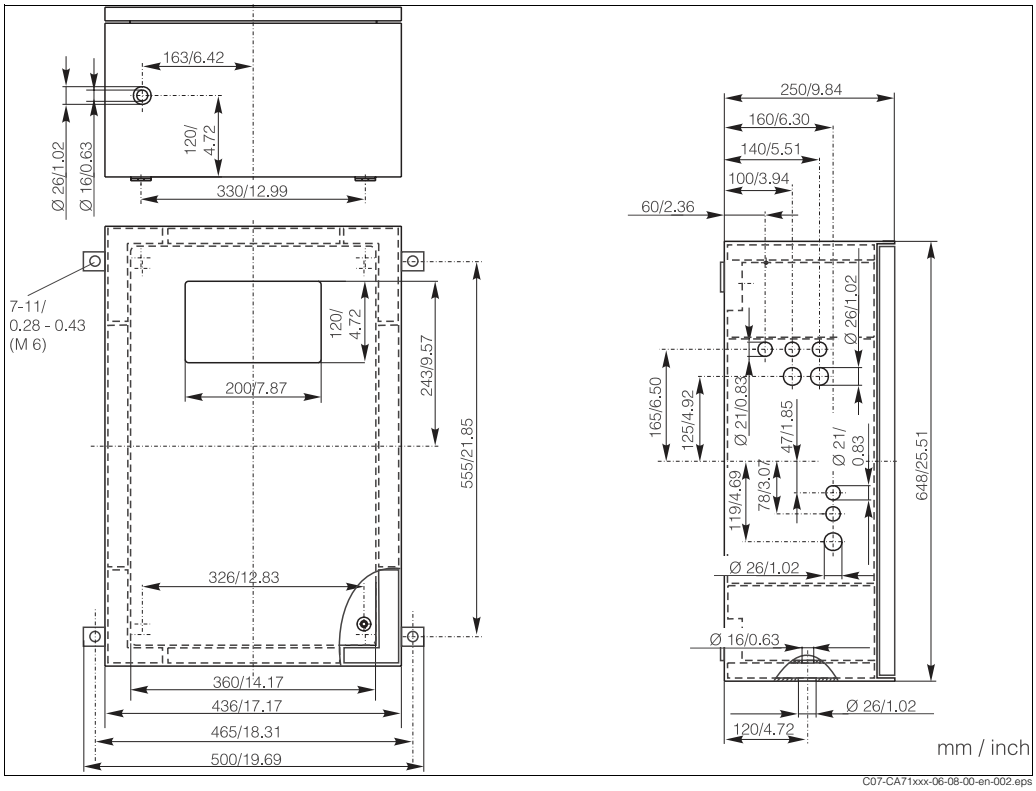

Fig. 3: CA 71 dimensions, GFK version

3.2.2 Connecting the sample line

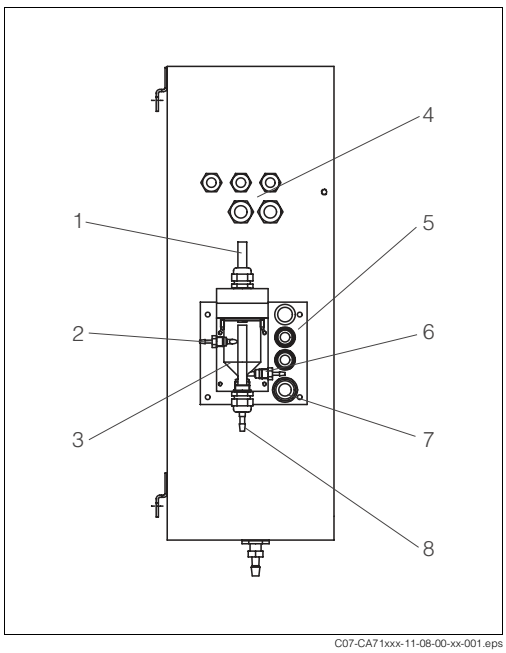

Fig. 4: Collecting vessel at analyzer (optionally)

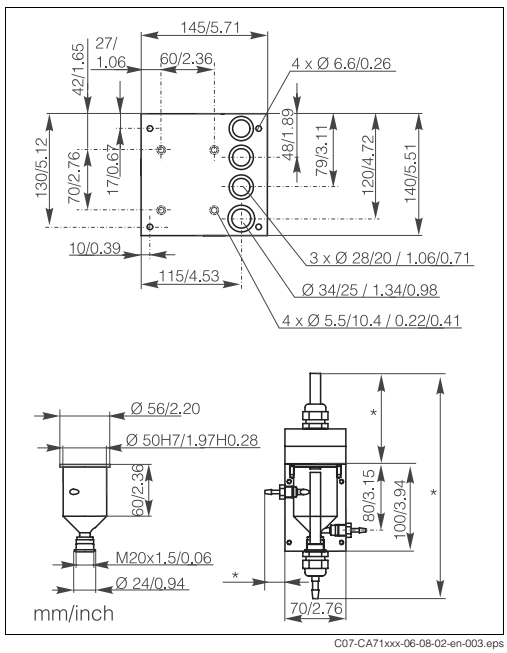

Fig. 5: Collecting vessel dimensions

1 Ventilation
2 Sample inlet from sampling
3 Collecting vessel
4 Electrical connections
5 Analyzer sample inlet

** variable, freely adjustable dimensions*
6 Sampling for analyzer
7 Analyzer outlet
8 Sample overflow

One-channel version

E+H Collecting vessel (at CA 71, with or without level measurement)

Connection	hose ID 3.2 mm (0.13")

Customer collecting vessel

Connection	hose ID 1.6 mm (0.06")
Max. distance from collecting vessel to analyzer	1 m (3.28 ft)
Max. height difference from collecting vessel to analyzer	0.5 m (1.64 ft)

Two-channel version

- In scope of delivery only a collecting vessel without level measurement
- Order a second collecting vessel seperately
- Only one collecting vessel can be mounted at housing
- Level measurement not available

Adjusting the level measurement (one-channel version only)

Adjust the conductive level measurement due to the number of connected analyzers.

1. In dependence of the application, mount the right adjusting pin or no adjusting pin (Fig. 6 and Fig. 7, position 2).
2. Pull the marked pipe (position 3) downwards due to your application (1, 2 or 3 analyzers).

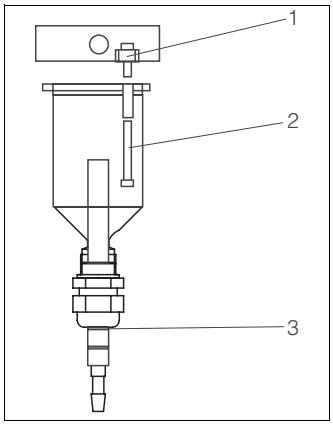

Fig. 6: One Analyzer

1 M 3x12 (0.47")
2 M 3x35 (1.38")
3 Mark 1

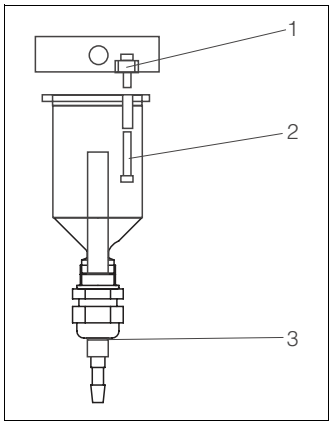

Fig. 7: Two analyzers

1 M 3x12 (0.47")
2 M 3x20 (0.79")
3 Mark 2

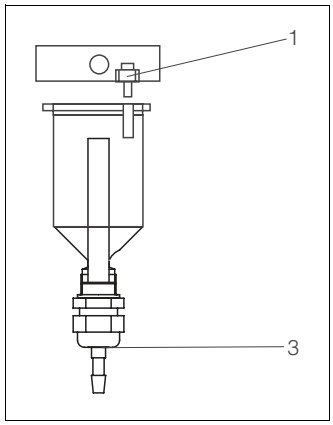

Fig. 8: Three analyzers

1 M 3x12 (0.47")
3 Mark 3

3.3 Installation instructions

To install the analyzer at the intended location, proceed as follows:

1. Place the analyzer in position and secure it to a wall using M6 screws.
   For the installation dimensions, please see previous chapter.
2. Place the edge covers on the analyzer edges (with GFK housing only).
3. Lay the drain pipe for the reaction products. Where possible, use fixed pipes (PVC or PE, internal diameter ¾ " with 3% incline).
4. Connect the sample transfer.

   ✎ Note!
   The sample can be obtained as follows:
   – Directly or after a reversible flow filter or a cross current filter by means of a small pump (rating approx. 300 ml/min), suitable for clear media, e.g. in the discharge channel of a sewage treatment plant
   – From a sedimentation tank or after microfiltration; this is practical for media containing flocculants,
     e.g. in an activated sludge basin
   – Sample conditioning using ultrafiltration for heavily soiled media,
     e.g. from the primary settling tank.

   For questions regarding sample conditioning and its automation, please contact Endress+Hauser Service or the Endress+Hauser Sales Centre responsible for your region.
5. Connect the tubes from canisters containing reagents, standard and cleaning agents to the following nozzles:

Canister	Hose designation (mark)
Sample	P
Reagent	FE
Standard solution	S
Cleaner	R

✎ Note!
The pressure of the hose cassette is set at the factory such that the sample and reagent are fed in without bubbles.
Only change the pressure if the factory setting does not meet your requirements. The setting is changed by turning the adjustment screw using a 2.5 mm Allen key.

3.4 Installation examples

3.4.1 CAT 430 or customer-specific ultra filtration and two CA 71 analyzers

- Permeate can contain air bubbles (CAT 430) or is free of bubbles (customer-supplied ultrafiltration)
- Distance between the analyzers as short as possible: sampling line between T-piece and the second analyzer (Fig. 9, item 2) shorter than 1.5 m
- Cross-section of sampling line ID 3.2 - 4 mm
- only one sample receiver required

✎ Note!
Ensure that there is always sufficient sample available for both analyzers. Observe this when selecting maintenance intervals for CAT 430 and when setting the buffer volume on the collecting vessel.

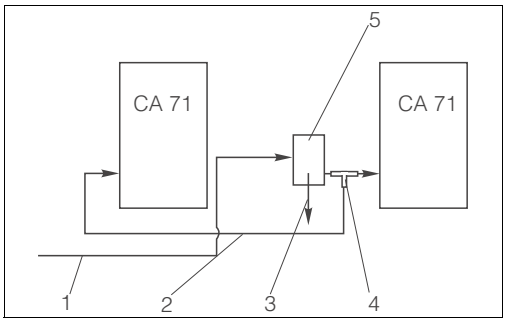

Fig. 9: Installation example

1 Sample from CAT 430
2 Sampling line
3 Sample receiver overflow
4 T-piece
5 Collecting vessel

3.4.2 CAT 411, CAT 430 and two CA 71 analyzers (two-channel version)

- Permeate not free of air bubbles
- Distance between the analyzers as short as possible: sampling line between T-piece and the second analyzer (Fig. 10, item 5) shorter than 1.5 m
- Cross-section of sampling line ID 3.2 - 4 mm
- one sample receiver each **(without level measurement)** for CAT 411 or CAT 430

✎ Note!
Ensure that there is always sufficient sample available for both analyzers. Observe this when selecting maintenance intervals for CAT 411 and CAT 430.

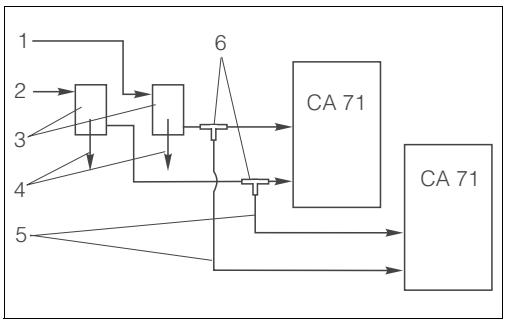

Fig. 10: Installation example

1 Sample from CAT 430
2 Sample from CAT 411
3 Collecting vessel
4 Collecting vessel overflow
5 Sampling lines
6 T-pieces

3.5 Post-installation check

- After installation, check that all connections are fitted tightly and are leakage resistant.
- Ensure that the hoses can not be removed without effort.
- Check all hoses for damage.

4 Wiring

4.1 Electrical connection

Warning!
- The electrical connection must only be carried out by authorised technical personnel.
- Technical personnel must have read and understood the instructions in this manual and must adhere to them.
- Ensure before beginning the connection work that there is no voltage at the power cable.

4.1.1 Quick wiring guide

Note!
The device does not have a mains switch. Therefore, it is advantageous to have a fused socket near to the device.

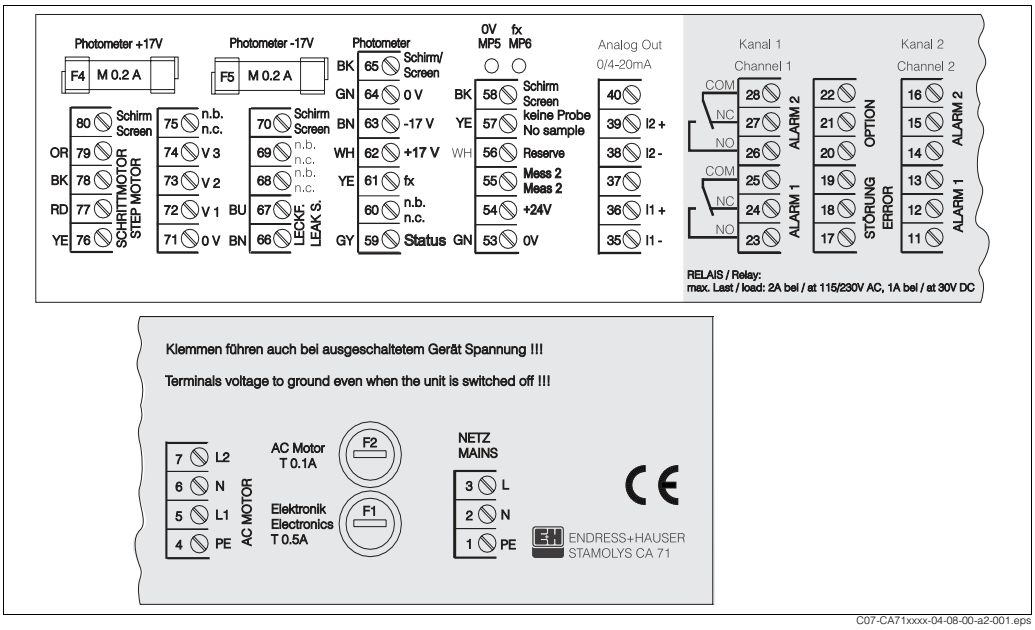

Fig. 11: Connection sticker CA 71

4.1.2 Terminal assignment

Function	Designation	Terminal without cooling device	Terminal with cooling device
Mains	L	3	3
	N	2	2
	PE	1	1
Alarm value 1, channel 1	COM	25	25
	NC	24	24
	NO	23	23
Alarm value 2, channel 1	COM	28	28
	NC	27	27
	NO	26	26
Alarm value 1, channel 2	COM	–	13
	NC	–	12
	NO	–	11
Alarm value 2, channel 2	COM	–	16
	NC	–	15
	NO	–	14
Fault	COM	19	19
	NC	18	18
	NO	17	17
Reserve (unassigned terminals)	COM	22	22
	NC	21	21
	NO	20	20
Analog output 1 0/4 ... 20 mA	+	36	36
	–	35	35
	Screen	PE[1]	PE[1]
Analog output 2 0/4 ... 20 mA	+	–	39
	–	–	38
	Screen	–	PE[1]
Sample conditioning remote control	Input	57	57
	0 V	53	53
Channel switch-over	Input	–	55
	0 V	–	53

1) Brass screw with bolt top right in the connection compartment (marked with ⏚)



Note!
- Alarm values 1 and 2 do not need to be connected if the PLC sets its own alarm values at the analog output.
- When using a sample conditioning system:
  Connect terminals 57 and 53 on the CA 71 to the corresponding terminals on the sample conditioning system. For the allocation of these terminals, please see the sample conditioning system operating instructions.
- If there is a 24 V voltage at terminal 57, the analyzer will not begin measurement (sample not ready). To start measurement, the voltage must stay at 0 V for at least 5 seconds.

4.2 Signal connection

4.2.1 Screening of the analog outputs

The interference suppressor attenuates electromagnetic effects on control, power and signal lines.
After the connection of the data transfer cables clip the interference suppressor (in scope of delivery) on the cable cores (not on the outer insulation of the cable!). Place the cable screen out of the interference suppressor and connect it to PE (brass screw with bolt, top right in the connection compartment) (→ Fig. 12).

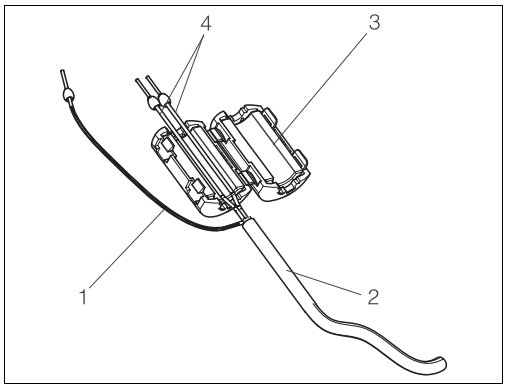

Fig. 12: Interference protection of the signal cable

1 Cable screen (to PE)
2 Signal cable
3 Interference suppressor
4 Cable cores of the signal cable

Note!
With the two-channel version, place the cable cores of all cables (data cables to analog output 1 and to analog output 2) through the interference suppressor.

4.2.2 One-channel version

Connection	Designation	Function
Signal inputs	Leak	Liquid has collected in the drip pan
	No sample	No sample available, measurement is not started, display flashes
Signal outputs	AV 1	Alarm value 1 exceeded or undershot
	AV 2	Alarm value 2 exceeded or undershot
	Fault	Retrieves error message using operation menu
Analog output	I-1 channel 1	0 or 4 mA = measuring range start 20 mA = measuring range end

4.2.3 Two-channel version

Connection	Designation	Function
Signal inputs	Leak	Liquid has collected in the drip pan
	No sample	No sample available, measurement is not started, display flashes
Signal outputs	AV 1 - 1	Alarm value 1, channel 1 exceeded or undershot
	AV 1 - 2	Alarm value 2, channel 1 exceeded or undershot
	AV 2-1	Alarm value 1, channel 2 exceeded or undershot
	AV 2 - 2	Alarm value 2, channel 2 exceeded or undershot
	Fault	Retrieves error message using operation menu
	Channel ½ or measurement end[1]	Displays active channel Displays "Measurement finished" (5 s)
Analog output	I-1 channel 1	0 or 4 mA = measuring range start 20 mA = measuring range end
	I-2 channel 2	0 or 4 mA = measuring range start 20 mA = measuring range end
Channel selection	Meas. 2	0 V = channel 1 24 V = channel 2

1) Alternative selection

4.3 Switching contacts

One-channel version

Connection	Terminal connection for condition fulfilled	Terminal connection for condition not fulfilled	Terminal connection for power off
AV 1	A: 25 - 23 R: 25 - 24	A: 25 - 24 R: 25 - 23	25 - 24
AV 2	A: 28 - 26 R: 28 - 27	A: 28 - 27 R: 28 - 26	28 - 27
Fault	A: 19 - 17 R: 19 - 18	A: 19 - 18 R: 19 - 17	19 - 18
Unassigned	22 - 20 16 - 14 13 - 11	22 - 21 16 - 15 13 - 12	22 - 21 16 - 15 13 - 12

Two-channel version

Connection	Terminal connection for condition fulfilled	Terminal connection for condition not fulfilled	Terminal connection for power off
AV 1 - 1	A: 25 - 23 R: 25 - 24	A: 25 - 24 R: 25 - 23	25 - 24
AV 1 - 2	A: 13 - 11 R: 13 - 12	A: 13 - 12 R: 13 - 11	13 - 12
AV 2 - 1	A: 28 - 26 R: 28 - 27	A: 28 - 27 R: 28 - 26	28 - 27
AV 2 - 2	A: 16 - 14 R: 16 - 15	A: 16 - 15 R: 16 - 14	16 - 15
Fault	A: 19 - 17 R: 19 - 18	A: 19 - 18 R: 19 - 17	19 - 18
Channel ½ measurement end	A: 22 - 20 R: 22 - 21	A: 22 - 21 R: 22 - 20	22 - 21

A = NO current configured
R = NC current configured

Note!
Condition fulfilled means:
- AV 1: concentration > Alarm value 1
- AV 2: concentration > Alarm value 2
- Fault: error occurred

Contacts AV 1, AV 2 and fault are only affected during automatic operation.

4.4 Serial interface

Terminal assignment:

RS 232 of CA 71			COM 1/2 at PC	
SUB-D, nine-pin	Function		Function	SUB-D, nine-pin
3	TxD		RxD	2
2	RxD		TxD	3
8	CTS		RTS	7
			CTS	8
5	GND		GND	5

Software protocol: 9600, N, 8, 1
Output format: ASCII

The results (measured value+unit of measure+CR) are output in the "Data memory Measured values" menu.
The calibration results (measured value+unit of measure+CR) are output in the "Data memory-Calibration factors" menu.

Note!
- A null modem cable is required (not a crossed one).
- The analyzer does not have to be configured for the interface.

The following commands can be sent from the PC, in order to read out data:
- "D" = Data memory-Measured values
- "C" = Data memory-Calibration factors
- "S" = Setup (parameter entry, configuration...)
- "F" = Frequency (current)

4.5 Post-connection check

Carry out the following checks after electrical connection:

Device status and specifications	Note
Is the analyzer or cable externally undamaged?	Visual inspection

Electrical connection	Note
Does the supply voltage correspond to the data on the nameplate?	230 V AC / 50 Hz 115 V AC / 60 Hz
Are current outputs screened and connected?	
Are the mounted cables relieved of tension?	
Cable type properly disconnected?	Guide power supply and signal lines separate over the entire travel distance. Separate cable channels are ideal.
Cable routing without scuffing or cross-overs?	
Are power supply and signal lines connected correctly according to wiring diagram?	
Are all screw terminals tightened?	
Are all cable entries mounted, tightened and leak-resistant?	
Interference suppressor at the analogue output?	
Current output simulation	See procedure below

Current output simulation:

1. Hold both arrow keys down (see "Display and operating elements" chapter) and connect the analyzer to the mains or switch the mains switch on (if available). Wait until the display "0 mA" appears.
2. Check on your PLC, PCS or you data logger whether the current value is the same.
3. Press the E key. Browse to the next current values (4, 12, 20 mA, depending on the setting).
4. Check that the respective current values are also on your PLC, PCS or your data logger.
5. If the values are not there, check the terminal assignment for analogue output 1 or 2.

5 Operation

5.1 Operation and commissioning

The following chapters provide you with information on the analyzer's operating elements and explain how to make settings.
In chapter "Commissioning" you will find the procedure for initial start-up and for daily analyzer operation.

5.2 Display and operating elements

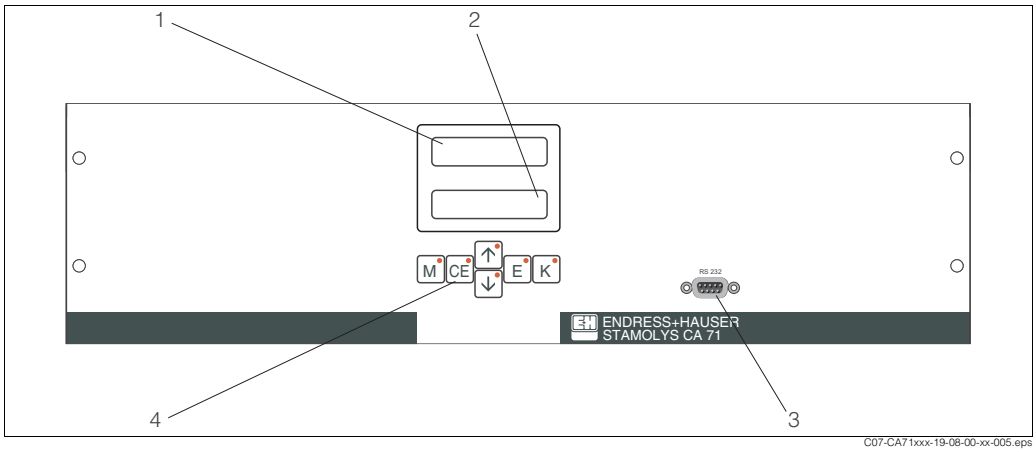

Fig. 13: CA 71 display and operating elements

1 LED (measured value)
2 LC display (measured value and status)
3 Serial interface RS 232
4 Operating keys and control LEDs

5.3 Local operation

The operating keys and the integrated indicator LEDs have the following functions:

Key	Key function	Indicator LED function
M	– "Auto measuring" option – back to the main menu from all sub-menus	Alarm value 1 exceeded
CE	– backwards in the sub-menu (horizontal, see Appendix,)	Alarm value 2 exceeded
↑	– backwards in the main menu (vertical) – Increase value	Measuring range exceeded
↓	– forwards in the main menu (vertical) – Reduce value	Measuring range undershot
E	– Select option – Adopt value, forwards in the sub-menu (horizontal)	Retrieve error message
K	– Selection in the sub-menu	unassigned

5.3.1 Main menu

Access the main menu by holding down the [M] key until “AUTO MEASURING” is displayed.
For the main menu options and information about them, please see the following table.

Selection	Display	Info
AUTO MEASURING	AUTO MEASURING	Calibration, measurement, flushing time-controlled actions
PARAMETER ENTRY	PARAMETER ENTRY	Default settings for measuring ranges, alarm values, calibration, flushing
CONFIGURATION	CONFIGURATION	Basic settings such as parameters, measuring units, arrangement of analog outputs and alarm values (NO, NC), date, time, offset values
LANGUAGE	LANGUAGE	Selecting menu language
ERROR DISPLAY	ERROR DISPLAY	Displaying error messages
SERVICE	SERVICE	Manually switching valves and pumps
DATA MEMORY 1	DATA MEMORY 1	Last 1024 measured values channel 1
DATA MEMORY 2 (Two-channel version only)	DATA MEMORY 2	Last 1024 measured values channel 2

5.3.2 AUTO MEASURING

The actions "calibration", "measuring" and "flushing" are triggered by time-control.
The settings for these actions are made in the "PARAMETER ENTRY" menu.
The respective action is displayed in the LC display. The most recently registered concentration value is displayed until the end of the next measurement.

Otherwise, "wait" is displayed when
- the time of the first measurement has not yet been reached or
- the measuring interval has not yet expired.



Note!
"Measuring" flashes when the analyzer is ready for the next measurement but has not yet received the enable signal from the sample collector or the sample conditioning unit.

5.3.3 CONFIGURATION

Note!
Some settings that can be made in this menu affect the defaults in the PARAMETER ENTRY menu. In view of this, complete the CONFIGURATION menu first during initial start-up.

Option	Range of adjustment (default settings in bold)	Display	Info
Code number	**03**	Code-Nr. ? 0	Input 03. If an incorrect code is entered the program exits the sub-menu.
Photometer	Depending on specification: **FE-A** **FE-B** **FE-C**	Photometer	This setting displays the parameter that is being measured (e.g. FE-A). This is defined by the product specification and set in this option at the factory. Do not change the value. Otherwise, you will receive an "Incorrect photometer" error message.
Default settings	yes / no	default setup y:↑+↓ n:E	If "yes" is selected, all previously changed settings are reset to the factory settings. In addition, the date for the 1st calibration and for the 1st flushing are set to the day after commissioning.
Measuring unit	µg/l / mg/l FE-A: **µg/l** FE-A + FE-C: **mg/l**	Unit of measure mg/l	Measuring unit selection is dependent on the type of photometer. This setting also affects the scope of the measuring range.
Calibration factor	0.20 ... 5.00 **1.00**	Calibr. factor 1.00	The calibration factor is the ratio of the measured concentration of the calibration standard to the pre-defined concentration of the standard (see "PARAMETER ENTRY", calibration solution). The deviation results from factors such as reagent ageing, ageing of constructive components, etc. The calibration factor compensates for these effects. CA 71 checks the registered calibration factor logically. If the factor lies outside of the error tolerance, the calibration is automatically repeated. If the repeat also lies outside, an error message appears and the analyzer continues to work with the most recently registered, logically correct factor. The last 10 calibration factors are filed in the memory with the date and time and can be retrieved by pressing the [K] key. The calibration factor ca be changed manually.
Concentration offset	0.00 ... 50.0 mg/l **0.00 mg/l**	c-Offset +0.00 mg/l	The offset specifies the zero shift of the calibration function. (Change the sign with the [K] key.)
Dilution	0.10 ... 1.00 **1.00**	Dilution 1.00	If the sample is to be diluted between taking the sample and the analyzer, the dilution factor has to be entered here (factor times measured value).
Delay to sample	20 ... 300 s **80 s**	Delay to sample 80 s	Dosing time for sample or standard (20 ... 120 s). During this time, the entire system is flushed with sample or standard, so when the reagent is added there is definitely only fresh sample in the mixer. If there is sufficient sample available, select the highest possible value.

Option	Range of adjustment (default settings in bold)	Display	Info
Analog output 1	0 ... 20 mA / 4 ... 20 mA **4 ... 20 mA**	Analog output 1 4-20 mA	Selection for the scope of channel 1 measuring range. If the concentration measuring range is 0 ... 5 mg/l, this corresponds to 0 mg/l either 4 mA or 0 mA. The end of the measuring range is the same in both cases at 20 mA.
Analog output 2		Analog output 2 4-20 mA	**Two-channel version only!** Selecting scope of channel 2 measuring range. The scopes of the measuring range are independent of each other for channel 1 and channel 2 and are determined by the start of measuring range (channel 1 / channel 2) or end of measuring range (channel 1 / channel 2) setting in the PARAMETER ENTRY menu.
Alarm value AV 1-1	NO current **NC current** ✎ Note! Changes will only be activated after a Reset (Power off/on)!	Alarm val. 1-1 norm. closed	Setting for whether contact for alarm value 1, channel 1 works as NO current or NC current contact.
Alarm value AV 2-1		Alarm val. 2-1 norm. closed	Setting for whether contact for alarm value 2, channel 1 works as NO current or NC current contact.
Alarm value AV 1-2		Alarm val. 1-2 norm. closed	**Two-channel version only!** Setting for whether contact for alarm value 1, channel 2 works as NO current or NC current contact.
Alarm value AV 2-2		Alarm val. 2-2 norm. closed	**Two-channel version only!** Setting for whether contact for alarm value 2, channel 2 works as NO current or NC current contact.
Error contact		Error contact norm. closed	Setting for whether error contact works as NO current or NC current contact
Current date/time	01.01.96 00:00... 31.12.95 23:59	act. Date/Time 25.01.02 15:45	Setting the system clock. Format DD.MM.YY hh:mm.
Calibrate offset	yes / no	Calibrate offs yes: K no: E	Frequency offset Pressing the K key starts a blind value measurement for compensating the reagent's inherent colour.
Frequency offset	– 5000 ... +5000 **0**	f-Offset [Hz] 0	Manually changing the frequency offset.

5.3.4 PARAMETER ENTRY

Note!
In the following table and in the tables in the next chapter, **example** images can be found for each option under "Display". In addition to the numerical values, the parameter is also displayed in some options. This is **not** shown in the images. Moreover, individual numerical values in the images can differ from the actual settings.
The **actual factory settings** can in any case be found in column 2 "Range of adjustment / Factory settings" in bold.

Option	Range of adjustment (default settings in bold)	Display	Info
Measuring range Start 1	FE-A: 10 ... 500 µg/l / **0 µg/l** FE-B: 0.05 ... 2.00 mg/l / **0.00 mg/l** FE-C: 0.10 ... 5.00 mg/l / **0.00 mg/l**	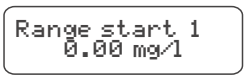	The specified concentration is allocated a value of 0 or 4 mA at analog output 1.
Measuring range Start 2		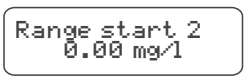	**Two-channel version only!** The specified concentration is allocated a value of 0 or 4 mA at analog output 2.
Measuring range End 1	FE-A: 10 ... 500 µg/l / **500 µg/l** FE-B: 0.05 ... 2.00 mg/l / **2.00 mg/l** FE-C: 0.10 ... 5.00 mg/l / **5.00 mg/l**	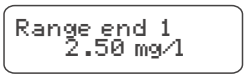	The specified concentration is allocated a value of 20 mA at analog output 1.
Measuring range End 2		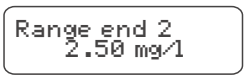	**Two-channel version only!** The specified concentration is allocated a value of 20 mA at analog output 2.
Alarm value AV 1 - 1	FE-A: 10 ... 500 µg/l / **250 µg/l** FE-B: 0.05 ... 2.00 mg/l / **1.00 mg/l** FE-C: 0.10 ... 5.00 mg/l / **2.50 mg/l**	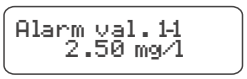	Concentration threshold value limit relay 1, channel 1 (differential hysteresis 2% of alarm value).
Alarm value AV 2 - 1	FE-A: 10 ... 500 µg/l / **500 µg/l** FE-B: 0.05 ... 2.00 mg/l / **2.00 mg/l** FE-C: 0.10 ... 5.00 mg/l / **5.00 mg/l**	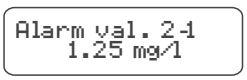	Concentration threshold value limit relay 2, channel 1 (differential hysteresis 2% of alarm value).
Alarm value AV 1 - 2	FE-A: 10 ... 500 µg/l / **250 µg/l** FE-B: 0.05 ... 2.00 mg/l / **1.00 mg/l** FE-C: 0.10 ... 5.00 mg/l / **2.50 mg/l**	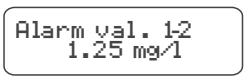	**Two-channel version only!** Concentration threshold value limit relay 1, channel 2 (differential hysteresis 2% of alarm value).
Alarm value AV 2 - 2	FE-A: 10 ... 500 µg/l / **500 µg/l** FE-B: 0.05 ... 2.00 mg/l / **2.00 mg/l** FE-C: 0.10 ... 5.00 mg/l / **5.00 mg/l**	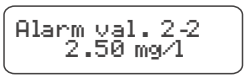	**Two-channel version only!** Concentration threshold value limit relay 2, channel 2 (differential hysteresis 2% of alarm value).
Time 1st measurement	01.01.96 00:00... 31.12.95 23:59	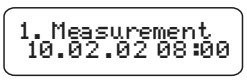	Date format DD.MM.YY, time hh.mm. After each change the instrument does not wait for the measuring interval. If the measurement is to start immediately, set the time in the past.
Measuring interval	6 ... 120 min **10**	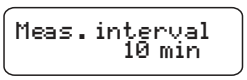	Time between two measurements. If the setting is 2 minutes, the measurements take place without any pauses.
Frequency of measurement Channel 1	0 ... 9 **1**[1]	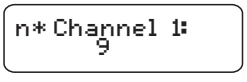	**Two-channel version only!** Number of measurements at channel 1 before switching to channel 2.
Frequency of measurement Channel 2	0 ... 9 **1**[1]	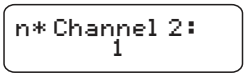	**Two-channel version only!** Number of measurements at channel 2 before switching to channel 1.

Option	Range of adjustment (default settings in bold)	Display	Info
Date of the 1st Calibration	01.01.96 00:00... 31.12.95 23:59	1. Calibration 01.01.02 08:00	Time of 1st calibration (DD.MM.YY, time hh.mm). After each change the instrument does not wait for the calibration interval. If the calibration is to start immediately, set the time in the past. Analyzers are delivered pre-calibrated. – Start 1st calibration 2 hours after the initial start-up at the earliest (warm-up phase) – Set the time to 8:00 to reproduce impacts on calibration in the curve. – If you have started a calibration manually, you should re-define the time of the 1st calibration because the interval is dependent on the last calibration.
Calibration interval	0 ... 720 h **48 h**	Calib.interval 48 h	Time between two calibrations. The "0 h" setting stops calibration. Recommended: calibration interval of 48 ... 72 h.
Calibration solution	FE-A: 10 ... 500 µg/l / **500 µg/l** FE-B: 0.05 ... 2.00 mg/l / **2.00 mg/l** FE-C: 0.10 ... 5.00 mg/l / **2.00 mg/l**	Calib. solution 1.00 mg/l	Concentration of the calibration standard. Select a standard, whose concentration is in the upper third of the measuring range.
Date of the 1st flushing	01.01.96 00:00... 31.12.95 23:59	1. Flushing 01.01.02 08:10	Time of 1st flushing (DD.MM.YY, time hh.mm). After each change the instrument does not wait for the calibration interval. If the flushing is to start immediately, set the time in the past. – Set the time to 4:00 to reproduce impacts on flushing in the curve. – If you have started flushing manually, you should re-define the time of the 1st flushing because the interval is dependent on the last flushing.
Flushing interval	0 ... 720 h **48 h**	Flush. interval 48 h	Time between two flushings. The "0 h" setting stops cleaning.
Flushing hold on	0 ... 60 s **60 s**	Flushing hold on 60 s	Dwell time of flushing solution in the pump-mixer-photometer line. Recommended: 30 ... 60 s.

1) All channels set to 0 means, the channel selection is provided by an external device. All channels set to 1 means, alterning beginning with channel 1.



Note!
- Always synchronise calibration and flushing time.
- Carry out flushing with standard cleaning solution approx. 3-4 hours **before** the next calibration.
  Flushing with special cleaning solution (e.g. hydrochloric acid) has a lasting effect on calibration. Therefore, carry out this cleaning 3-4 hours **after** calibration.

5.3.5 LANGUAGE

The following languages are available:
- Deutsch
- English
- Français
- Nederlands
- Suomi
- Magyar
- Polski
- Italiano.

5.3.6 ERROR DISPLAY

Note!
- This menu is a "Read-Only-Menu".
- You can find the individual error messages, their meaning and solutions to problems in chapter "Trouble-shooting instructions".
- If there is at least one error message, the signal output is set to "fault".
- Causes of faults are requested for every measurement. If an error which occurred previously no longer exists, it is automatically cancelled. If this should not happen automatically, error messages can be deleted by quickly switching the analyzer off and back on again.

5.3.7 SERVICE

Navigate through the main menu with the ↓ key to the "SERVICE" option and press the E key to enter the menu.

Option	Display	Info
Pumps and valves	V1 P1 P2 V2 V3 P s s S 1	"Virtual switching board" Various valve and pump combinations can be selected. The setting options are: – Valve 1: P (sample) or S (standard) – Pump 1 and pump 2: s (stop) or g (go) – Valve 2: S (standard) or C (cleaning agent) – Valve 3 (**Two-channel version only**): 1 (channel 1) or 2 (channel 2) The following valve combinations are possible: (applies to one-channel and two-channel version, whereby where the latter is concerned selection is made by positioning valve 3 between channel 1 and 2) – V1: P, V2: S Passage for the sample. This combination is automatically reset on leaving the service menu. – V1: S, V2: S Passage for standard solution – V1: S, V2: R Passage for cleaning agent
Signal frequency	0 Hz	Signal frequency of the photometer
Mixture	Mix s	The reagent and sample pumps can be switched on together, so that they run in the same ratio as for filling the sample-reagent mixture in measurement mode. Selection between s (stop) and g (go).

5.3.8 DATA STORAGE-Measured values

Note!
Two menus, "DATA MEMORY 1" and "DATA MEMORY 2", are only **for the two-channel version.** In the one-channel version there is only one menu "DATA MEMORY".

Selection	Display	Info
Measured values	53.1 ppb 02.02.99 22:47	The data memory contains the last 1024 concentration measured values with date and time. If there are no values available, "Empty set" appears. Browse through the data sets by pressing the ↑ and ↓ keys.
Serial output	Serial output yes: K no: E	You can output **all** data sets (in ASCII-format) via the serial interface. For this, the receiving end (PC) must be configured like this: 9600, N, 8, 1. To send data, the receiving end (PC) must send the ASCII character 81 ("Shift", "D").
Clear data	Clear data y: ↑+↓ n: E	This deletes **all** data sets.

5.3.9 DATA STORAGE-Calibration data

Note!
To enter this menu select the CONFIGURATION menu, browse to the "Calibration factor" option and press the K key.

Selection	Display	Info
Calibration factor	Calibr. factor 1.00	This data memory contains the last 100 calibration factors with date and time. If there are no values available, "Empty set" appears. Browse through the data sets by pressing the ↑ and ↓ keys.
Serial output **only available via PC!**	no display	You can output **all** data sets (in ASCII-format) via the serial interface. For this, the receiving end (PC) must be configured like this: 9600, N, 8, 1. To send data, the receiving end (PC) must send the ASCII character 81 ("Shift", "C").
Clear data	Clear data y: ↑+↓ n: E	This deletes **all** data sets.

5.4 Calibration

5.4.1 Standard calibration data

The signal strength is processed device-internally as a frequency.
The following table provides an overview of the standard calibration data (frequency-offset = 0).

Note!
Compare these values to your own data.
After changes in the CONFIGURATION menu and in case of software updates, you can check and, if necessary, change the calibration data in the sub-menu.

	Measuring range	Concentration [mg/l]	Frequency [Hz]
Iron, lower measuring range FE-A	10 ... 500 µg/l	0.000 0.050 0.100 0.150 0.200 0.250 0.300 0.350 0.400 0.500	0 19 44 68 92 116 139 163 186 232
Iron, medium measuring range FE-B	0.05 ... 2.00 mg/l	0.00 0.50 1.00 1.50 2.00	0 238 492 754 1010
Iron, upper measuring range FE-C	0.10 ... 5.00 mg/l	0.00 0.50 1.00 1.50 2.00 2.50 3.00 3.50 4.00 5.00	0 238 492 754 1010 1251 1477 1693 1920 2307

5.4.2 Calibration example

Proceed as follows if you want to activate an immediate calibration (e.g. after you have replaced the reagents).

Ensure that you have changed the reagents, filled the hoses again (no air bubbles) and the analyzer is in measuring mode.

1. Hold M down until AUTO MEASURING appears.
2. Use ↓ to move through the PARAMETER ENTRY menu and press E.
3. Use E to go to the "1st calibration" option.
4. Select the option with E
5. Now use the ↓ or ↑ and E keys to set a time which lies in the past.
6. Press E to accept the value and then press M twice to return to the main menu
7. Press E again. This takes you back to measuring mode.
   The calibration is now carried out automatically.

Caution!
After the calibration has finished, the analyzer automatically goes into measuring mode. You now have to set the time of the 1st calibration back into the future in order to align the calibration and rinsing times to each other. The rinse must be performed 3-4 hours before the next calibration.
Proceed as described above to change the setting for the time of the 1st calibration. After changing to measuring mode, the analyzer automatically begins measuring, rinsing and calibrating at the defined times.

6 Commissioning

6.1 Function check



Warning!
- Check that all connections have been made correctly. Check, in particular, that all hose connections are secure, so that no leaks occur.
- Ensure that the mains voltage corresponds to the voltage specified on the nameplate.

6.2 Switch-on

6.2.1 Dry commissioning



Note!
- If possible, let the analyzer warm up in standby mode before commissioning ("Auto measuring" display). The time can be defined via the "1st measurement" option in the PARAMETER ENTRY menu.
- At the start of measurement with a cold analyzer, the first measuring results will be errored. The reaction is temperature-dependent and if the temperature is too low the pre-defined reaction time is insufficient for a complete reaction. For this reason, never carry out calibration with a cold analyzer. Wait at least two hours before carrying out calibration.

When the analyzer has been configured and calibrated, the measuring cycle starts automatically. Entering parameters is no longer necessary.

To perform initial start-up or to readjust the device parameters, proceed as follows:

1. Plug-in the plug into a socket.
2. Press the M key until AUTO MEASURING is displayed.
3. Select the CONFIGURATION menu and program the individual options up to and including the "Current date/time". With M you can return to the main menu.
4. Now complete the PARAMETER ENTRY and SERVICE menus.
   With M you can return to the main menu.
5. Select CONFIGURATION again and use E to go to the "Calibrate offset" option.
6. Connect a vessel containing distilled water to the "Sample" connection and start the frequency offset (K key). The registered value is displayed and saved.
7. Then reconnect the sampling line.
   With M you can return to the main menu.

The analyzer starts the "Calibration", "Measurement", and "Flushing" procedures automatically (triggered by control signal or integrated timer) in accordance with the device parameters that you have set (1st calibration, 1st measurement, 1st flushing times and the respective intervals control the temporal procedure).

The following summary presents procedures carried out in the device and the intervals you have programmed:

	Function	Duration [s]	Range of adjustment
Measurement	Flushing (sample) Delay to sample Stabilisation 1st measurement Flushing (reag. line) Fill mixture Reaction 2nd measurement Flushing (sample)	3 x 15 20 ... 300 4 2 15 ... 18 s. Techn. data 30	CONFIGURATION / "Delay to sample" SERVICE / "Mixture"
Calibration	Flushing (standard) Delay to standard Stabilisation 1st measurement Flushing (reag. line) Fill mixture Reaction 2nd measurement Flushing (sample)	3 x 15 20 ... 300 4 2 15 ... 18 s. Techn. data 30	CONFIGURATION / "Delay to sample" SERVICE / "Mixture"
Flushing	Pump cleaning solution Allow to react Pump cleaning solution	Flush hold on: 2 5 Flush hold on: 2	PARAMETRIEREN / "Flush hold on"

6.2.2 Wet commissioning

This is different to the dry commissioning in that, for wet commissioning the reagent lines are filled before the automatic measurement, calibration and flushing cycle is started.

Proceed as follows:

1. Plug-in the plug into a socket.
2. Press the M key until AUTO MEASURING is displayed.
3. Select the SERVICE menu.
4. Switch the P2 reagent pump "on" (with E select P2 and with ↑ set to"g") and leave it running until you can tell that there are reagents at the T-connector. After this, switch P2 "off" (s) again with ↓.
5. Now switch the valves to passage for standard (select V1: S, V2: S; with E or CE switch to "S" with ↑) and then switch the P1 sample pump "on". Leave the pump running until you can tell that there is standard at the T-connector. Switch P1 back "off".
6. Now switch the valves to passage for cleaning agent (select V1: S, V2: R; with E or CE switch to "R" or "S" with ↑) and then switch the P1 sample pump "on". Leave the pump running until you can tell that there is cleaning agent at the T-connector. Switch P1 back "off".
7. Now switch the valves to passage for sample (select V1: P, V2: S; with E or CE switch to "P" or "S" with ↑) and then switch the P1 sample pump "on". Leave the pump running until you can tell that there is sample at the T-connector. Switch P1 back "off".

Note!
For the two-channel version, valve V3 must be set additionally for switch-over between channel 1 and channel 2.

8. Now proceed as with dry commissioning (from step 2).

7 Maintenance

Caution!
You must not carry out any procedures **not** listed in the following chapters, yourself. This work must only be carried out by the E+H Service.

Note!
Please, find accessories and wear parts in chapter "Accessories".

7.1 Maintenance schedule

All maintenance duties that have to be carried out during normal operation of the analyzer are explained below.
If you are using a sample conditioning unit, e.g. CAT 430, coordinate the maintenance work required for it with that of the analyzer. For this, read the maintenance chapter in the respective operating instructions.

Period of time	Duty	Note
weekly	Check and note calibration factor (for service purposes)	CONFIGURATION
every 2 weeks	– Check concentration of the calibration standard in the laboratory	– Adjust if necessary (PARAMETER ENTRY) or new standard – Remove the cassette of the sample pump when doing this.
monthly	– Flush sample line hose system with pressurized water (disposable syringe), check and replace reagents if neccessary – Flush the sample tubing system with 12.5% bleaching lye (sodium hypochloride) and reflush thoroughly with water ⚠ Warning! Corrosive. Wear protective gloves and goggles. Beware of reagent splashing. – Spray pump hoses with silicone spray – Check sample collector for fouling and clean it if necessary – Rotate pump hoses	– see chapter "Replacing reagents" – SERVICE V1: S, P1: g, P2: s, V2: S Add solution to sampling connection.
every 3 months	– Cleaning drain lines	
every 6 months	– Replace pump hoses – Replace valve hoses	– see chapter "Replacing pump hoses"

Note!
Whenever working on the reagent hoses, the hoses must be disconnected from the canisters, in order to prevent contamination of the reagents.

7.2 Replacing reagents



Warning!
- There is a danger of crushing limbs at doors, inserts and pump heads.
- Refer to the warning instructions in the safety data sheets when handling reagents. Wear protective clothing, gloves and goggles.
- Make sure the workplace is well ventilated when you work with chlorine bleach. If you feel unwell, consult a physician immediately.
- If reagents come into contact with the skin or eyes, carefully rinse with copious amounts of water and consult a physician immediately.
- Never add water to reagents. Reagents containing acids may splash and heat may build up.

If you store the reagents correctly (in the dark, not over 20 °C) they will keep for minimum 12 weeks from the date of manufacture (batch number). When this period of time has expired, the reagents must be replaced. Shelf life can be prolonged by keeping the reagents in a dark, cool storage place. The reagents absolutely must be replaced when:
- the reagents have been contaminated by sample (see "Trouble-shooting instructions")
- the reagents are too old
- the reagents have been spoilt by incorrect storage conditions or environmental influences.

Reagents check

a. Check the standard solution concentration in the laboratory. Adapt the values (PARAMETER ENTRY, "Calibration solution") or replace the standard solution.

b. Mix 10 ml standard solution and 5 ml of each reagent in a vessel. You must replace the reagents, if there is no visible colouration ten minutes later.

To replace the reagents proceed as follows:

1. Carefully remove the hoses from the canisters and wipe them with a dry (paper) cloth. Wear protective gloves when doing this.
2. Switch on the reagent pump for about 5 seconds.
3. Flush the reagent hose with plenty of distilled water (see SERVICE).
4. Replace the reagent canister and feed the hoses into the new canister.
5. Fill the reagent hose with the new reagents (SERVICE). Switch all pumps to "g". If there are no more air cushings to be seen in the hoses, switch the pumps to "s".
6. Determine the reagent blank value by using destilled water as a sample (see chapter "Calibration").
   Enter the measured value as the frequency offset (CONFIGURATION / "Frequency offset").
7. Then carry out a calibration (see chapter "Calibration").

7.3 Replacing pump hoses



Warning!
When removing hoses from the hose nozzles, beware of reagent splashing. For this reason, wear protective gloves and goggles.

The peristaltic pumps used for the analyzer convey the medium in a combination of vacuum and displacement pump. The pump rate is dependent on the elasticity of the pump hoses. Elasticity decreases as mechanical stress increases and the pump rate drops. Wear depends on mechanical stress (measuring interval, pump starting pressure). Up to a certain degree, the wear-effect can be compensated by calibration. If the impairment in elasticity is too great, the pump rate is no longer reproducible and this leads to incorrect measurements. This is why it is necessary to replace the hoses.

To replace the hoses proceed as follows:

1. Flush the old hoses with water first and then empty them (see SERVICE).
2. Remove the hoses from the connecting nipples on the pump(s).
3. Remove the reagent hoses from the reagent canisters, in order to prevent contamination of the reagents.
4. Loosen the hose cassette. Now you can remove the hoses.
5. Replace the new pump hoses in the reverse sequence of operations. Do not forget to reconnect the reagent hoses to the canister.
6. After installation, refill the hoses with sample, standard or cleaning agent (SERVICE menu).
7. Carry out a calibration (PARAMETER ENTRY menu).



Caution!
Ensure that you connect the new pump hoses to the correct connections at theT-connector.
For the order numbers of the pump hoses see chapter "Trouble-shooting"/"Spare parts".

7.4 Replacing valve hoses

To replace the hoses, proceed as follows:

1. Rinse the old hoses first with water and then with air to empty them (see SERVICE).
2. Remove the hoses from the valves:
   a. You can disconnect the front hoses directly because the valves are open when de-energised
   b. To remove the back hoses, press the black feeler on the valve and disconnect the hoses.
3. Replace the new pump hoses in the reverse sequence of operations.
   Ensure that the hoses are connected correctly (→ Fig. 14).
4. After installation, refill the hoses with sample, standard or cleaning agent (SERVICE).
5. Carry out a calibration (PARAMETER ENTRY).

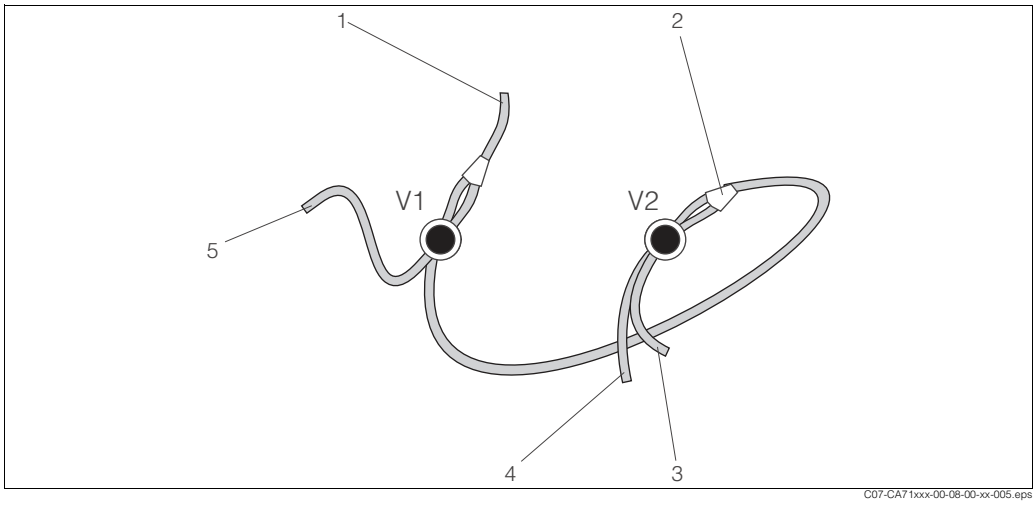

Fig. 14: Valves and valve hoses

V1 Valve 1
V2 Valve 2
1 To the pump
2 Y-piece, Y-piece, connecting hose to valve 1, behind it
3 Hose valve 2, front, standard
4 Hose valve 2 back, cleaning agent
5 Hose valve 1 front, sample

7.5 Replacing the static mixer

To replace the mixer, proceed as follows:

1. Rinse first with water and then with air (see SERVICE).
2. Unscrew the four screws on the photometer housing and remove it.
3. Disconnect the hoses on the right and left of the mixer.
4. Remove the old mixer from the clip and insert the new one.
5. Connect the new mixer to the hoses again.
6. Attach the photometer housing and screw it down.
7. After installation, refill the hoses with sample, standard or cleaning agent (SERVICE).
8. Carry out a calibration (PARAMETER ENTRY).

7.6 Replacing the photometer optical cell

To replace the cell, proceed as follows:

1. Rinse first with water and then with air (see SERVICE).
2. Unscrew the four screws on the photometer housing and remove it.
3. Unscrew the four screws on the side of the photometer, on which there is no ribbon cable.
4. Separate the photometer's electronics from each other.
5. Take out the cell and remove the hoses.
6. Insert the new cell.

Caution!
Do not **under any circumstances** touch the optical window of the cell with your fingers! Otherwise, traces of grease remain on the optical surfaces. This can lead to corrupted measured values.

7. Connect the cell to the hoses such that the sample is fed in from below.
8. Secure the hoses with the supplied cable connectors to stop the cell from slipping.
9. Reassemble the photometer and tighten the screws.
10. Attach the photometer housing and screw it down.
11. After installation, refill the hoses with sample, standard or cleaning agent (SERVICE).
12. Carry out a calibration (PARAMETER ENTRY).

7.7 Cleaning

Caution!
When cleaning, ensure that you do not damage the nameplate on the analyzer. Do not use any solvent-based cleaning agents.

To clean the analyzer housing, proceed as follows:
- Stainless steel housing (stainless steel SS 1.4301 (AISI 304)):
  with a lint-free cloth and Glittol RG 10.51
- GFR housing:
  with a damp cloth or with tenside-based (alkaline) cleaning agent.

7.8 Placing out of service

You must place out of service the analyzer before shipping or before longer operation breaks (more than 5 days).

Caution!
Before placing the instrument out of service, thoroughly rinse all the lines of the measuring system with clean water.

To place the analyzer out of service, proceed as follows:

1. Remove the reagent and standard hoses from the canisters and immerse them in a tank containing clean water.
2. Switch valve 1 to "Standard" and switch pumps 1 and 2 on for one minute (SERVICE menu).
3. Remove hoses from the water and allow the pumps to run until the hoses are completely dry.
4. If you are using a continuous sample supply,
   disconnect sampling line.
5. Flush sampling hoses with clean water.
6. Slacken hose clips and remove pump hoses from the contact rollers.

8 Accessories

8.1 Collecting vessel

- for sampling from pressurized systems
- results in an unpressurized continuous sample stream

❑Collecting vessel without level measurement; order no. 51512088
❑Collecting vessel with level measurement (conductive); order no. 51512089

8.2 Reagents, cleaner, standard solution

❑Reagent, 1 l reagent FE1; order no. CAY840-V10AAE
❑Standard solution 0.5 mg/l Fe; order no. CAY842-V10C05AAE
❑Standard solution 2.0 mg/l Fe; order no. CAY842-V10C20AAE



Note!
Please, note the disposal instructions in the safety data sheets of the reagents!

8.3 Hose cleaner

❑Cleaning agent, alkaline, 100 ml; order no. CAY746-V01AAE
❑Cleaning agent, acidic, 100 ml; order no. CAY747-V01AAE

8.4 Additional accessories

❑Maintenance kit CAV 740:
  – 1 set pump hoses yellow/blue
  – 1 Satz pump hoses black/black
  – per 1 set hose connectors
  order no. CAV 740-1A
❑Interference suppressor for control, power and signal lines
  order no. 51512800
❑Silicon spray
  order no. 51504155
❑Valve set, 2 pieces, for two-channel version
  order no. 51512234
❑Upgrade kit for upgrading from one-channel to two-channel version
  order no. 51512640

9 Trouble-shooting

9.1 Trouble-shooting instructions

Although the analyzer is not very prone to faults due to its simple assembly, problems can, of course, not be completely ruled out.
Possible errors, their causes and their possible remedies are listed below.

9.2 System error messages

Error message	Possible cause	Tests and / or corrective measures
Calibration failed		If a calibration fails, you can enter a new calibration factor manually (CONFIGURATION menu, "Calibration factor"). Cancel the error message by switching the analyzer off and on briefly. If the error occurs frequently, you will have to search for the cause.
	Air bubbles in system	Start calibration manually (PARAMETER ENTRY, "1st calibration", change the date accordingly, start measurement) or enter a new calibration factor.
	Incorrect concentration of standard	Check the concentration in the laboratory. Adjust the standard accordingly (PARAMETER ENTRY, "Calibration solution") or replace the standard.
	Reagents contaminated or aged	Simple check: Add about 20 ml of standard solution with about 1 ml of reagent in a beaker. If it does not change colour after max. 10 min, replace the reagents.
	Standard dosing defective	Check the valves for contamination, obstructions (visual inspection). Replace valve hoses if neccessary.
	Wrong optical cell	Check the setting in the CONFIGURATION menu.
Optical cell dirty	Not enough light intensity sent to receiver, e.g. due to sedimented particles	– Flush with 12.5% bleaching lye – When using a CAT 430: Check the filter.
Wrong optical cell	Wrong optical cell	Check the setting in the CONFIGURATION menu, "Photometer".
No sample	No sample	Establish sample transfer.
	Level measurement defective	Check level measurement on sample collector.
Spillage error	Leak at canisters or hoses	Replace defective components and clean and dry the CA 70 or those components affected by the leak.
No measuring signal	Photometer defective	Inform E+H Service
	Electrical connection	Check all electrical connections.
	Fuse defective	Replace fuse F4 or F5 (medium time-lag 0.2 A)

9.3 Process errors without messages

Error message	Possible cause	Tests and / or corrective measures
Measured values always the same	Reagents contaminated or aged	Simple check: Add about 20 ml of standard solution with about 1 ml of reagent in a vessel. If it does not change colour after max. 10 min, replace the reagents .
	No sample, no reagents	Make sure sample and reagents are supplied, check level monitor and clean if necessary
	System blocked	Flush with 12.5% bleaching lye (monthly maintenance)
Measured values inaccurate	Incorrect concentration of standard	Check the concentration in the laboratory. Adjust the standard accordingly ("PARAMETER ENTRY", "Calibration solution") or replace the standard.
	Reagents contaminated or aged	Simple check: Add about 20 ml of standard solution with about 1 ml of reagent in a vessel. If it does not change colour after max. 10 min, replace the reagents.
	Reagent blank value too high	After replacing the reagents, carry out an offset calibration and then a calibration (CONFIGURATION, "Offset calibration")
	Wrong dimension	Check the setting in the CONFIGURATION menu, "Measuring unit".
	Wrong optical cell	Check the setting in the CONFIGURATION menu, "Photometer"
	Sample suction time too short	Increase the suction time (CONFIGURATION, "Delay to sample")
	Matrix effects (substances that interfere with the photometric methods)	Detect interfering substances (see Technical Information, "Measuring principle"), possibly use sample conditioning
	Standard is dosed to the sample	Check the valves and valve settings. Replace valve hoses if necessary.
	Filter life too long	Take counter sample at analyzer inlet and check the concentration in the laboratory. If the analyzer measured values have no deviations, clean ultrafiltration modules or backflush filters more frequently.
	System block or contaminated	Flush with 12.5% bleaching lye (monthly maintenance)
	Dosing	Replace pump hoses.
	Optical cell dirty	Flush with 12.5% bleaching lye first and then with 5% hydrochloric acid
Counter sample in the laboratory delivers deviating measured values	Sample ageing	Shorten time between sampling and analysis.
Measured value transfer errored	Wrong size of analog output	Check the setting (CONFIGURATION, "Analog output 1" " 2").
	Incorrect measuring range	Adjust measuring range (PARAMETER ENTRY, "Measuring range")
	Background noise	Check line for interference from strong sources of induction.
Analyzer will not switch on	No power	Check the electrical connection and ensure power supply.
	Fuse	Replace fuse F1 (time-lag 0.5 A)
Analyzer is running but display reading is garbled or off	Initialisation failed	Switch the analyzer off and after approx. 30 seconds back on.
Pumps fail to run	Leak	See "Spillage error" error message
	Leak sensor bypassed	Interrupt contact between two leak sensors (pins 67-66)
	Fuse	Check all fuses and replace if necessary.
	Pump defective	E+H-Service
Measurement does not start	Leak on photometer	E+H-Service

Error message	Possible cause	Tests and / or corrective measures
"Measurement" display flashes	Time of 1st measurement not reached	The date must be between 01.01.1996 and the current date.
	Interval not expired	Change parameters.
Calibration does not start	Time of 1st calibration not reached	The date must be between 01.01.1996 and the current date.
	Interval not expired or 0 h	Change parameters.
	Leak on photometer	E+H-Service
Flushing does not start	Time of 1st flushing not reached	The date must be between 01.01.1996 and the current date.
	Interval not expired or 0 h	Change parameters.
Leak on Photometer	Device or discharge blocked	Remove blockage. E+H-Service
Blockage, deposits in device	Water hardness	Lime deposits can by flushing with 5% hydrochloric acid . If necessary, dose EDTA in sample stream to prevent sedimentation.
	Not enough sample conditioning	Shorten cleaning intervals of sample conditioning..

9.4 Spare parts

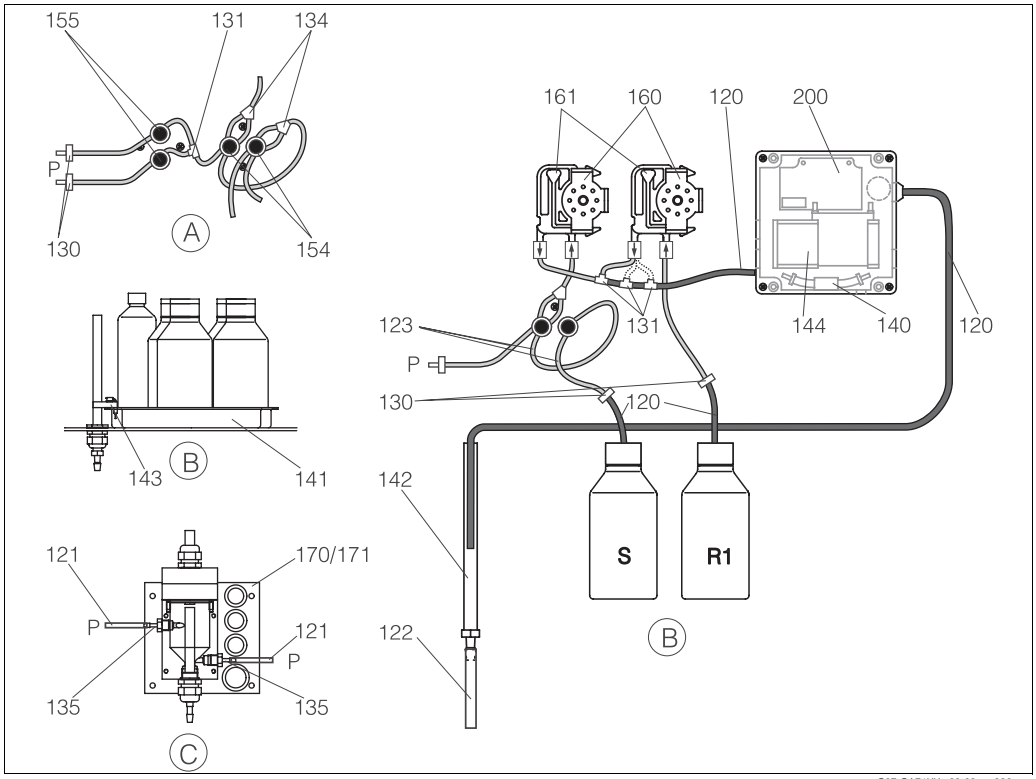

Fig. 15: Overview parts

A Sample input two-channel version
B Standards and reagent canisters
C Collecting vessel
P Sample
R1 Reagent 1 canister
S Standard solution canister

Fig. 15 shows the components of the analyzer. Please, take the spare parts order numbers from the following sections.

9.4.1 Spare parts for sample and reagent transportation

Item	Spare part	Order number
120	Hose made of Norprene, 1.6 mm	51504116
121	Hose made of C-Flex, 3.2 mm (permeate inlet and overflow with sample collector)	51504114
122	Hose made of C-Flex, 6.4 mm	51504115
123	Hose made of C-Flex, 1.5 mm	51512535
130	Hose adapter, 1.6 mm x 1.6 mm	51506495
131	Hose adapter T, 1.6 mm x 1.6 mm x 1.6 mm	51506490
134	Hose adapter Y, 1.6 mm x 1.6 mm x 1.6 mm	51512096
135	Connection nipples for sampler (10 pieces)	51512099
140	Mixer set, complete (2 pieces)	51512101
141	Collecting tank	51512102
142	Outlet pipe with hose nibble (2 pieces)	51512104
143	Leak sensor for collecting tank	51512103
154	Valve, complete	51512100
155	Valve set for two-channel version	51512235
160	Wheel head with holder for hose pump	51512085
161	Hose casette for pump	51512086
170	Collecting vessel with level measurement	51512089
171	Collecting vessel without level measurement	51512088

9.4.2 Analyzer specific spare parts

Item	Spare part	Order number
130-133	Maintenance kit CAV 740: – 1 set pump hoses yellow/blue – 1 Satz pump hoses black/black – per 1 set hose connectors	CAV740-1A
144	Photometer optical cell	51505778
200	Photometer iron – FE-A – FE-B / FE-C	 51512069 51512070

9.5 Return

If the device requires repair, please send it *cleaned* to the appropriate Endress+Hauser sales office.
Please use the original packaging, if possible.
Please enclose the completed Dangerous Goods sheet (copy the second last page of these Operating Instructions) with the packaging and the transportation documents.

9.6 Disposal

The device contains electronic components and must therefore be disposed of in accordance with regulations on the disposal of electronic waste.
Please observe local regulations.

10 Technical data

10.1 Input

Measured variable	Fe [µg/l] / [mg/l]
Measuring range	10 ... 500 µg/l (FE-A) 0.05 ... 2.00 mg/l (FE-B) 0.10 ... 5.00 mg/l (FE-C)
Wave length	565 nm
Reference wave length	880 nm

10.2 Output

Output signal	0/4 ... 20 mA
Signal on alarm	Contacts: 2 limit contacts (per channel), 1 system alarm contact optionally:end of measurement (with two channel version display of channel no. available)
Load	max. 500 Ω
Serial interface	RS 232 C
Load capacity	230 V / 115 V AC max. 2 A, 30 V DC max. 1 A

10.3 Power supply

Supply voltage	115 V AC / 230 V AC ±10%, 50/60 Hz
Power consumption	approx. 50 VA
Current consumption	ca. 0.2 A at 230 V ca. 0.5 A at 115 V
Fuses	1 x time-lag 0.5 A for electronics 2 x medium time-lag 0.2 A for photometer 1 x time-lag 0.1 A for motors

10.4 Performance characteristics

Response time t_{100}	Time between two measurements: reaction time + rinse time + waiting time + rinse again time + filling time (minimum waiting time = 0 min)
Maximum measured error	2 % of measuring range end
Measuring interval	2 ... 120 minutes
Reaction time	2 minutes
Sample requirement	15 ml / measurement
Reagent requirement	1 x 0.15 ml / measurement 0.65 l of reagent per month with 10 minute measuring interval
Calibration interval	0 ... 72 h
Rinse interval	0 ... 72 h
Rinse time	selectable from 20 to 300 s (standard = 80 s)
Rinse again time	30 s
Filling time	22 s
Maintenance interval	6 month (typically)
Servicing requirements	15 minutes / week (typically)

10.5 Environment

Ambient temperature	5 ... 40 °C (41... 104 °F), avoid markable fluctuations
Humidity	below the condensation limit, installation in usual, clean rooms outdoor installation only possible with protective devices (customer supplies)
Ingress protection	IP 43

10.6 Process

Sample flow rate	min. 5 ml per min
Consistance of the sample	low solid content (< 50 mg/l)
Sample inlet	pressureless

10.7 Mechanical construction

Design, dimensions	see chapter "Installation"	
Weight	GFK housing	approx. 28 kg (61.7 lb)
	Stainless steel housing	approx. 33 kg (72.8 lb)
Materials	Housing	Stainless steel 1.4301 (AISI 304) or GFK
	Front windows	Plexiglass®
	Endless hose	C-Flex®, Norprene®
	Pump hose	Tygon®, Viton®
	Valves	Tygon®

11 Appendix

11.1 Operating matrix

One-channel version

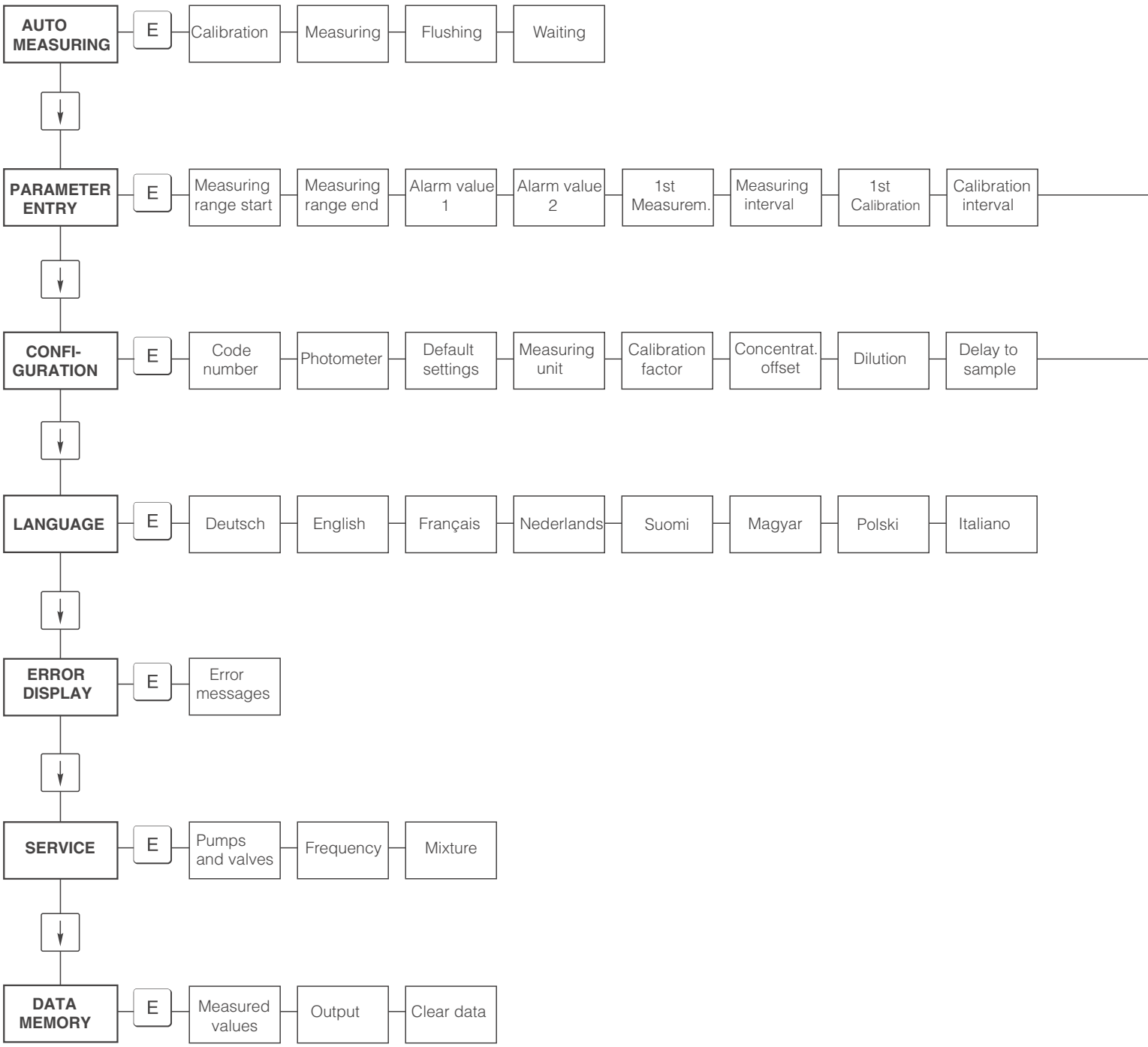

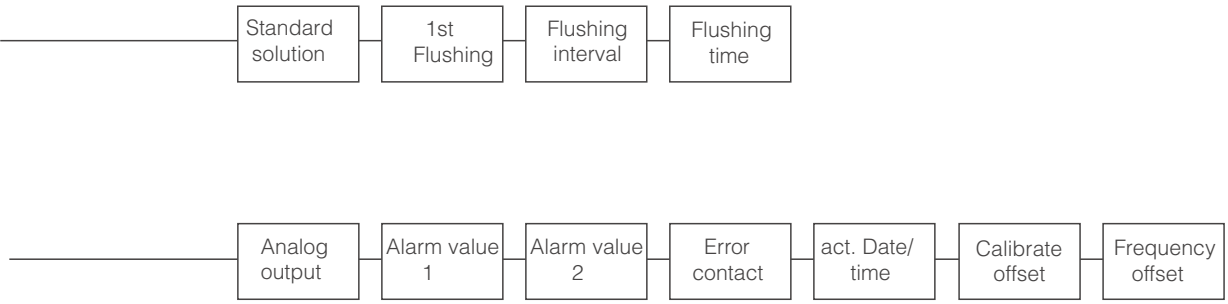
Standard solution
1st Flushing
Flushing interval
Flushing time
Analog output
Alarm value 1
Alarm value 2
Error contact
act. Date/ time
Calibrate offset
Frequency offset

Two-channel version



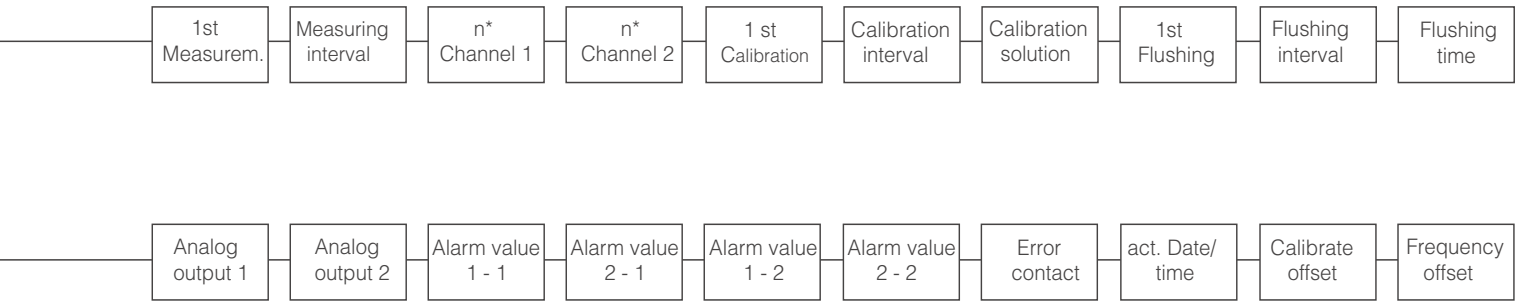
1st Measurem.
Measuring interval
n* Channel 1
n* Channel 2
1 st Calibration
Calibration interval
Calibration solution
1st Flushing
Flushing interval
Flushing time
Analog output 1
Analog output 2
Alarm value 1 - 1
Alarm value 2 - 1
Alarm value 1 - 2
Alarm value 2 - 2
Error contact
act. Date/ time
Calibrate offset
Frequency offset

11.2 Ordering forms

to Fax no:	
Telefax for chemicals ordering	
to (adress of your E+H sales centre, see OM backpage)	**from** (invoice adress) Company: Concern: Street: Zip code / Town: Telefax / Telephone:
Adress for delivery (if not the above adress) Company / Name: Street / Zip code / Town:	

Chemicals for CA 71 Iron

Quantity	Order no.	Description
	CAY840-V10AAE	Reagent, 1 l reagent FE1
	CAY842-V10C05AAE	Standard solution 0.5 mg/l Fe
	CAY842-V10C20AAE	Standard solution 2.0 mg/l Fe

Chemicals for Ultra filtration

Quantity	Order no.	Description
	CAY746-V01AAE	Alkaline cleaning agent P3-Ultrasil 130, 100 ml
	CAY746-V10AAE	Alkaline cleaning agent P3-Ultrasil 130, 1 l
	CAY746-V50AAE	Alkaline cleaning agent P3-Ultrasil 130, 5 l
	CAY747-V01AAE	Acidic cleaning agent P3-Ultrasil 130, 100 ml
	CAY747-V10AAE	Acidic cleaning agent P3-Ultrasil 130, 1 l
	CAY747-V50AAE	Acidic cleaning agent P3-Ultrasil 130, 5 l

Place Date Signature

Delivery one week after orders received. Delivery is unpaid.

to Fax no:	
Telefax for wear parts ordering	
to (adress of your E+H sales centre, see OM backpage)	**from** (invoice adress) Company: Concern: Street: Zip code / Town: Telefax / Telephone:
Adress for delivery (if not the above adress) Company / Name: Street / Zip code / Town:	

Maintenance kit

Quantity	Order no.	Description
	CAV740-1A	Maintenance kit CA 7X • 1 Set pump hoses yellow/blue (12 pieces) • 1 Set pump hoses black/black (12 pieces) • 1 Set of each hose adapter pos. 130-134 (10 pieces each) • C-Flex valve hose, length 1.40 m

Spare parts for maintenance and service

Quantity	Position	Pieces/pack.	Description	Order no.
	110	12	Tygon pump hose yellow/blue	51506434
	111	12	Tygon pump hose black/black	51506437
	120	15 m	Norpren hose ID 1.6 mm	51504116
	121	7.5 m	C-Flex hose ID 3.2 mm	51504114
	122	7.5 m	C-Flex hose ID 6.4 mm	51504115
	123	1 m	C-Flex hose ID 1.5 mm	51512535
	130	10	Hose adapter 1.6 mm x 1.6 mm	51506495
	131	10	Hose adapter T 1.6 mm x 1.6 mm x 1.6 mm	51506490
	132	10	Hose adapter 3.2 mm x 3.2 mm	51506491
		10	Hose adapter T 6.4 mm x 6.4 mm x 6.4 mm	51506493
		10	Hose adapter 6.4 mm x 6.4 mm	51506494
	133	10	Hose adapter 3.2 mm x 6.4 mm	51506492
	134	10	Y Hose adapter 1.6 mm x 1.6 mm x 1.6 mm	51512096
	135	10	Connection nipples for sampler (10 pieces)	51512099
	155	1	Valve set for two-channel version	51512235
	160	1	Wheel head with holder for hose pump	51512085
	161	1	Hose casette for pump	51512086
	170	1	Collecting vessel with level measurement	51512089
	171	1	Collecting vessel without level measurement	51512088
	200	1	Photometer Type[1]:	
		1	Silicon spray	51504155
		1	Cleaning syringe	51503943

1) Please, take the photometer type and the order no. from chapter "Trouble-shooting/Spare parts" and write it down here!

Place Date Signature

Delivery one week after orders received. Delivery is unpaid.

11.3 Analyzer settings

Place:
Type:
Serial no. Analyzer:
Serial no. Photometer:
Software version:
Date:

Photometer Type:				
Measuring unit:				
Calibration factor:				
c-offset:			❑ mg/l	❑ µg/l
Dilution:				
Delay to sample:			s	
Analog output:	❑ 0-20 mA	❑ 4-20 mA		
AV 1:	❑ normally closed	❑ normally open		
AV 2:	❑ normally closed	❑ normally open		
Fault signal:	❑ normally closed	❑ normally open		
Frequency offset:			Hz	
Ground line: (demineralised water without reagent)			Hz	
Measuring range start:			❑ mg/l	❑ µg/l
Measuring range end:			❑ mg/l	❑ µg/l
AV 1:			❑ mg/l	❑ µg/l
AV 2:			❑ mg/l	❑ µg/l
1st measuring:				
Measuring interval:			min	
1st calibration:				
Calibration interval:			h	
Calibration solution:			❑ mg/l	❑ µg/l
1st rinsing:				
Rinse interval:			h	
Rinse time:			s	

Submenu			
Error mask:			
MB >:			
MBE:			
Rinse again:			
Filling time:			
Reaction time:			
U/min:			
K floating mean:			
N:	Points		
C1:	mg/l / µg/l	F 1:	Hz
C2:	mg/l / µg/l	F 2:	Hz
C3:	mg/l / µg/l	F 3:	Hz
C4:	mg/l / µg/l	F 4:	Hz
C5:	mg/l / µg/l	F 5:	Hz
C6:	mg/l / µg/l	F 6:	Hz
C7:	mg/l / µg/l	F 7:	Hz
C8:	mg/l / µg/l	F 8:	Hz
C9:	mg/l / µg/l	F 9:	Hz
C10:	mg/l / µg/l	F 10:	Hz

Date: Service technician:

11.4 Maintenance schedule

Form

Maintenance schedule for Analyser Nr. .....

weekly

⇒ Check and note calibration factor

⇒ visible control (Soiling or blinding, pump tubings, reagent, sample inlet etc.)

done	KW 1	KW 2	KW 3	KW 4	KW 5	KW 6	KW 7	KW 8	KW 9	KW 10	KW 11	KW 12
date												

done	KW 13	KW 14	KW 15	KW 16	KW 17	KW 18	KW 19	KW 20	KW 21	KW 22	KW 23	KW 24
date												

done	KW 25	KW 26	KW 27	KW 28	KW 29	KW 30	KW 31	KW 32	KW 33	KW 34	KW 35	KW 36
date												

done	KW 37	KW 38	KW 39	KW 40	KW 41	KW 42	KW 43	KW 44	KW 45	KW 46	KW 47	KW 48
date												

done	KW 49	KW 50	KW 51	KW 52	KW 53
date					

2-weekly

⇒ Check concentration of the calibration factor in the laboratory

May be Concentration in the menue parameter entry chanching or new standard produce.

⇒ Flush sample tubing system with pressurised water (disposable syringe). Remove hose holder unit from the pump.

Done	KW 1	KW 3	KW 5	KW 7	KW 9	KW 11	KW 13	KW 15	KW 17	KW 19	KW 21	KW 23
Date												

Done	KW 25	KW 27	KW 29	KW 31	KW 33	KW 35	KW 37	KW 39	KW 41	KW 43	KW 45	KW 47
Date												

Done	KW 49	KW 51	KW 53
Date			

monthly or if it‘s needed

⇒ replace raegents

⇒ flush the sample tuing system with 12.5% bleaching lye (sodium hypochloride) and reflush thoroughly with water (Menue Service V1: P, P1: e, P2: a, V2: S, (two channel version also V3))

⇒ check sample collector for fouling and clean it if necassary

⇒ spray pump hoses with silicone spray

done	Jan	Feb	Mär	Apr	Mai	Jun	Jul	Aug	Sep	Okt	Nov	Dez
date												

all 3 month / all 6 month

⇒ turn on the pump tubings in the hose holder unit **(monthly)** , change **(all 6 month)**

Attention: Whenever working on the reagent hoses, the hoses must be disconnected from the canisters and the T-connectors near the reagent pump, in order to prevent contamination of the reagents.

⇒ cleaning drain lines

done	Jan	Feb	Mär	Apr	Mai	Jun	Jul	Aug	Sep	Okt	Nov	Dez
date												

Index

A
Accessories 35
AUTO MEASURING 20

C
Calibration 26
Certificates 7
Checking
  Connection 18
  Function 28
  Installation 12
Cleaner 35
Cleaning 34
Collecting vessel 35
Commissioning 4, 28
  Dry 28
  Wet 29
CONFIGURATION 21
Connection
  Electrical 13
  Sample line 9
  Serial interface 17
  Signals 15
Contacts 16

D
DATA STORAGE 26
Declaration of conformity 7
Designated use 4
Display 19
Disposal 39

E
Electrical connection 13
Environment 41
ERROR DISPLAY 25
Error messages 36
Errors 36
  Process errors 37
  System errors 36

I
Icons 5
  safety symbols 5
Incoming acceptance 8
Input 40
Installation 4, 8, 11
  Examples 12
Interference suppressor 15

L
LANGUAGE 25

M
Main menu 20
Maintenance 30
  Schedule 30
Mechanical construction 41
Menu
  Auto Measuring 20
  Configuration 21
  Data storage 26
  Error display 25
  Language 25
  Main menu 20
  Parameter entry 23
  Service 25
Mixer 33

N
Nameplate 6

O
Operating matrix 42
Operation 4, 19
Operational safety 4
Ordering information 6
Output 40

P
PARAMETER ENTRY 23
Performance characteristics 41
Photometer optical cell 33
Placing out of service 34
Power supply 40
Process 41
Product structure 6
Pump hoses 32
Pumps 25

Q
Quality certificate 7

R
Reagents 31, 35
Replacing
  Mixer 33
  Photometer optical cell 33
  Pump hoses 32
  Reagents 31
  Valve hoses 32
Return 4, 39

S

Safety icons 5
Sample line. 9
Scope of delivery 7
Screening. 15
Serial interface 17
SERVICE. 25
Signal connection. 15
Spare parts. 38
Standard solution 35
Storage. 8
Switching contacts. 16
Switch-on 28
Symbols 5

T

Technical data 40–41
Terminal assignment 14
Transport 8

U

Use. 4
    designated 4

V

Valve hoses 32
Valves. 25

W

Wiring
    Connection sticker 13

Declaration of contamination

Dear customer,
Because of legal determinations and for the safety of our employes and operating equipment we need this "Declaration of contamination" with your signature before your order can be handled. Please put the completely filled in declaration to the instrument and to the shipping documents in any case. Add also safety sheets and/or specific handling instructions if necessary.

type of instrument / sensor: _____ serial number: _____

medium / concentration: _____ temperature: _____ pressure: _____

cleaned with: _____ conductivity: _____ viscosity: _____

Warning hints for medium used:



☐ radioactive ☐ explosive ☐ caustic ☐ poisonous ☐ harmful of health ☐ biological hazardous ☐ inflammable ☐ safe

Please mark the appropriate warning hints.

Reason for return:

_____

_____

Company data:

company: _____ contact person: _____

_____ _____

_____ department: _____

address: _____ phone number: _____

_____ Fax/E-Mail: _____

_____ your order no.: _____

I hereby certify that the returned equipment has been cleaned and decontaminated acc. to good industrial practices and is in compliance with all regulations. This equipment poses no health or safety risks due to contamination.

_____ _____

(Date) (company stamp and legally binding signature)

More information about services and repairs:
www.services.endress.com

Endress+Hauser
The Power of Know How

Europe

Austria – Wien
❑ Endress+Hauser Ges.m.b.H.
Tel. (01) 88 05 60, Fax (01) 88 05 63 35

Belarus – Minsk
Belorgsintez
Tel. (017) 2 50 84 73, Fax (017) 2 50 85 83

Belgium / Luxembourg – Bruxelles
❑ Endress+Hauser S.A. / N.V.
Tel. (02) 2 48 06 00, Fax (02) 2 48 05 53

Bulgaria – Sofia
Intertech-Automation Ltd.
Tel. (02) 9 62 71 52, Fax (02) 9 62 14 71

Croatia – Zagreb
❑ Endress+Hauser GmbH+Co.
Tel. (01) 6 63 77 85, Fax (01) 6 63 78 23

Cyprus – Nicosia
I+G Electrical Services Co. Ltd.
Tel. (02) 48 47 88, Fax (02) 48 46 90

Czech Republic – Praha
❑ Endress+Hauser Czech s.r.o.
Tel. (02) 66 78 42 31, Fax (026) 66 78 41 79

Denmark – Søborg
❑ Endress+Hauser A/S
Tel. (70) 13 11 32, Fax (70) 13 21 33

Estonia – Tartu
Elvi-Aqua
Tel. (7) 30 27 32, Fax (7) 30 27 31

Finland – Helsinki
❑ Metso Endress+Hauser Oy
Tel. (204) 8 31 60, Fax (204) 8 31 61

France – Huningue
❑ Endress+Hauser S.A.
Tel. (389) 69 67 68, Fax (389) 69 48 02

Germany – Weil am Rhein
❑ Endress+Hauser Messtechnik GmbH+Co. KG
Tel. (07621) 9 75 01, Fax (07621) 97 55 55

Greece – Athens
I & G Building Services Automation S.A.
Tel. (01) 9 24 15 00, Fax (01) 9 22 17 14

Hungary – Budapest
❑ Endress+Hauser Magyarország
Tel. (01) 4 12 04 21, Fax (01) 4 12 04 24

Iceland – Reykjavik
Sindra-Stál hf
Tel. 5 75 00 00, Fax 5 75 00 10

Ireland – Clane / County Kildare
❑ Flomeaco Endress+Hauser Ltd.
Tel. (045) 86 86 15, Fax (045) 86 81 82

Italy – Cernusco s/N, Milano
❑ Endress+Hauser S.p.A.
Tel. (02) 92 19 21, Fax (02) 92 19 23 62

Latvia – Riga
Elekoms Ltd.
Tel. (07) 33 64 44, Fax (07) 33 64 48

Lithuania – Kaunas
UAB Agava Ltd.
Tel. (03) 7 20 24 10, Fax (03) 7 20 74 14

Netherlands – Naarden
❑ Endress+Hauser B.V.
Tel. (035) 6 95 86 11, Fax (035) 6 95 88 25

Norway – Lierskogen
❑ Endress+Hauser A/S
Tel. 32 85 98 50, Fax 32 85 98 51

Poland – Wroclaw
❑ Endress+Hauser Polska Sp. z o.o.
Tel. (071) 7 80 37 00, Fax (071) 7 80 37 60

Portugal – Cacem
❑ Endress+Hauser Lda.
Tel. (21) 4 26 72 90, Fax (21) 4 26 72 99

Romania – Bucharest
Romconseng S.R.L.
Tel. (01) 4 10 16 34, Fax (01) 4 11 25 01

Russia – Moscow
❑ Endress+Hauser GmbH+Co
Tel. (095) 1 58 75 64, Fax (095) 7 84 63 91

Slovak Republic – Bratislava
Transcom Technik s.r.o.
Tel. (2) 44 88 86 90, Fax (2) 44 88 71 12

Slovenia – Ljubljana
❑ Endress+Hauser (Slovenija) D.O.O.
Tel. (01) 5 19 22 17, Fax (01) 5 19 22 98

Spain – Sant Just Desvern
❑ Endress+Hauser S.A.
Tel. (93) 4 80 33 66, Fax (93) 4 73 38 39

Sweden – Sollentuna
❑ Endress+Hauser AB
Tel. (08) 55 51 16 00, Fax (08) 55 51 16 55

Switzerland – Reinach/BL 1
❑ Endress+Hauser Metso AG
Tel. (061) 7 15 75 75, Fax (061) 7 11 16 50

Turkey – Levent/Istanbul
Intek Endüstriyel Ölcü ve Kontrol Sistemleri
Tel. (0212) 2 75 13 55, Fax (0212) 2 66 27 75

Ukraine – Kiev
Photonika GmbH
Tel. (44) 2 68 81 02, Fax (44) 2 69 07 05

Great Britain – Manchester
❑ Endress+Hauser Ltd.
Tel. (0161) 2 86 50 00, Fax (0161) 9 98 18 41

Yugoslavia Republic – Beograd
Meris d.o.o.
Tel. (11) 4 44 29 66, Fax (11) 3 08 57 78

Africa

Algeria – Annaba
Symes Systemes et Mesures
Tel. (38) 88 30 03, Fax (38) 88 30 02

Egypt – Heliopolis/Cairo
Anasia Egypt For Trading (S.A.E.)
Tel. (02) 2 68 41 59, Fax (02) 2 68 41 69

Morocco – Casablanca
Oussama S.A.
Tel. (02) 22 24 13 38, Fax (02) 2 40 26 57

Rep. South Africa – Sandton
❑ Endress+Hauser (Pty.) Ltd.
Tel. (011) 2 62 80 00, Fax (011) 2 62 80 62

Tunisia – Tunis
CMR Controle, Maintenance et Regulation
Tel. (01) 79 30 77, Fax (01) 78 85 95

America

Argentina – Buenos Aires
❑ Endress+Hauser Argentina S.A.
Tel. (11) 45 22 79 70, Fax (11) 45 22 79 09

Brazil – Sao Paulo
❑ Samson Endress+Hauser Ltda.
Tel. (011) 50 31 34 55, Fax (011) 50 31 30 67

Canada – Burlington, Ontario
❑ Endress+Hauser (Canada) Ltd.
Tel. (905) 6 81 92 92, Fax (905) 6 81 94 44

Chile – Santiago de Chile
❑ Endress+Hauser (Chile) Ltd.
Tel. (02) 3 21 30 09, Fax (02) 3 21 30 25

Colombia – Bogota D.C.
Colsein Ltda.
Tel. (01) 2 36 76 59, Fax (01) 6 10 78 68

Costa Rica – San Jose
Euro-Tec (Costa Rica) S.A.
Tel. 2 20 28 08, Fax 2 96 15 42

Ecuador – Quito
Insetec Cia. Ltda.
Tel. (02) 2 26 91 48, Fax (02) 2 46 18 33

El Salvador – San Salvador
Automatizacion y Control Industrial de El Salvador, S.A. de C.V.
Tel. 2 84 31 51, Fax 2 74 92 48

Guatemala – Ciudad de Guatemala
Automatizacion y Control Industrial, S.A.
Tel. (03) 34 59 85, Fax (03) 32 74 31

Honduras – San Pedro Sula, Cortes
Automatizacion y Control Industrial de Honduras, S.A. de C.V.
Tel. 5 57 91 36, Fax 5 57 91 39

Mexico – México, D.F
❑ Endress+Hauser (México), S.A. de C.V.
Tel. (5) 5 55 68 24 07, Fax (5) 5 55 68 74 59

Nicaragua – Managua
Automatización y Control Industrial de Nicaragua, S.A.
Tel. 2 22 61 90, Fax 2 28 70 24

Peru – Lima
Process Control S.A.
Tel. (2) 61 05 15, Fax (2) 61 29 78

USA – Greenwood, Indiana
❑ Endress+Hauser Inc.
Tel. (317) 5 35 71 38, Fax (317) 5 35 84 98

USA – Norcross, Atlanta
❑ Endress+Hauser Systems & Gauging Inc.
Tel. (770) 4 47 92 02, Fax (770) 4 47 57 67

Venezuela – Caracas
Controval C.A.
Tel. (212) 9 44 09 66, Fax (212) 9 44 45 54

Asia

Azerbaijan – Baku
Modcon Systems
Tel. (12) 92 98 59, Fax (12) 92 98 59

Brunei – Negara Brunei Darussalam
American International Industries (B) Sdn. Bhd.
Tel. (3) 22 37 37, Fax (3) 22 54 58

Cambodia – Khan Daun Penh, Phom Penh
Comin Khmere Co. Ltd.
Tel. (23) 42 60 56, Fax (23) 42 66 22

China – Shanghai
❑ Endress+Hauser (Shanghai) Instrumentation Co. Ltd.
Tel. (021) 54 90 23 00, Fax (021) 54 90 23 03

China – Beijing
❑ Endress+Hauser (Beijing) Instrumentation Co. Ltd.
Tel. (010) 65 88 24 68, Fax (010) 65 88 17 25

Hong Kong – Tsimshatsui / Kowloon
❑ Endress+Hauser (H.K.) Ltd.
Tel. 8 52 25 28 31 20, Fax 8 52 28 65 41 71

India – Mumbai
❑ Endress+Hauser (India) Pvt. Ltd.
Tel. (022) 6 93 83 36, Fax (022) 6 93 83 30

Indonesia – Jakarta
PT Grama Bazita
Tel. (21) 7 95 50 83, Fax (21) 7 97 50 89

Iran – Tehran
Patsa Industry
Tel. (021) 8 72 68 69, Fax (021) 8 71 96 66

Israel – Netanya
Instrumetrics Industrial Control Ltd.
Tel. (09) 8 35 70 90, Fax (09) 8 35 06 19

Japan – Tokyo
❑ Sakura Endress Co. Ltd.
Tel. (0422) 54 06 11, Fax (0422) 55 02 75

Jordan – Amman
A.P. Parpas Engineering S.A.
Tel. (06) 5 53 92 83, Fax (06) 5 53 92 05

Kazakhstan – Almaty
BEI Electro
Tel. (72) 30 00 28, Fax (72) 50 71 30

Saudi Arabia – Jeddah
Anasia Industrial Agencies
Tel. (02) 6 53 36 61, Fax (02) 6 53 35 04

Kuwait – Safat
United Technical Services Est. For General Trading
Tel. 2 41 12 63, Fax 2 41 15 93

Lebanon – Jbeil Main Entry
Network Engineering
Tel. (3) 94 40 80, Fax (9) 54 80 38

Malaysia – Shah Alam, Selangor Darul Ehsan
❑ Endress+Hauser (M) Sdn. Bhd.
Tel. (03) 78 46 48 48, Fax (03) 78 46 88 00

Pakistan – Karachi
Speedy Automation
Tel. (021) 7 72 29 53, Fax (021) 7 73 68 84

Philippines – Pasig City, Metro Manila
❑ Endress+Hauser (Phillipines) Inc.
Tel. (2) 6 38 18 71, Fax (2) 6 38 80 42

Singapore – Singapore
❑ Endress+Hauser (S.E.A.) Pte. Ltd.
Tel. (65) 66 82 22, Fax (65) 66 68 48

Korea, South – Seoul
❑ Endress+Hauser (Korea) Co. Ltd.
Tel. (02) 6 58 72 00, Fax (02) 6 59 28 38

Sultanate of Oman – Ruwi
Mustafa & Sultan Sience & Industry Co. L.L.C.
Tel. 63 60 00, Fax 60 70 66

Taiwan – Taipei
Kingjarl Corporation
Tel. (02) 27 18 39 38, Fax (02) 27 13 41 90

Thailand – Bangkok 10210
❑ Endress+Hauser (Thailand) Ltd.
Tel. (2) 9 96 78 11-20, Fax (2) 9 96 78 10

United Arab Emirates – Dubai
Descon Trading L.L.C.
Tel. (04) 2 65 36 51, Fax (04) 2 65 32 64

Uzbekistan – Tashkent
Im Mexatronika-Tes
Tel. (71) 1 91 77 07, Fax (71) 1 91 76 94

Vietnam – Ho Chi Minh City
Tan Viet Bao Co. Ltd.
Tel. (08) 8 33 52 25, Fax (08) 8 33 52 27

Australia + New Zealand

Australia – Sydney, N.S.W.
❑ Endress+Hauser (Australia) Pty. Ltd.
Tel. (02) 88 77 70 00, Fax (02) 88 77 70 99

New Zealand – Auckland
EMC Industrial Group Ltd.
Tel. (09) 4 15 51 10, Fax (09) 4 15 51 15

All other countries

❑ Endress+Hauser GmbH+Co. KG
Instruments International
Weil am Rhein, Germany
Tel. (07621) 9 75 02, Fax (07621) 97 53 45

http://www.endress.com

Endress+Hauser
The Power of Know How

❑ Members of the Endress+Hauser group 09.02

BA 360C/07/en/01.03
Printed in Germany / FM+SGML 6.0 / DT
51512324