Level | Pressure | Flow | Temperature | Liquid Analysis | Registration | Systems Components | Services | Solutions

Operating Instructions

Micropilot M FMR250

Level-Radar

HART COMMUNICATION PROTOCOL

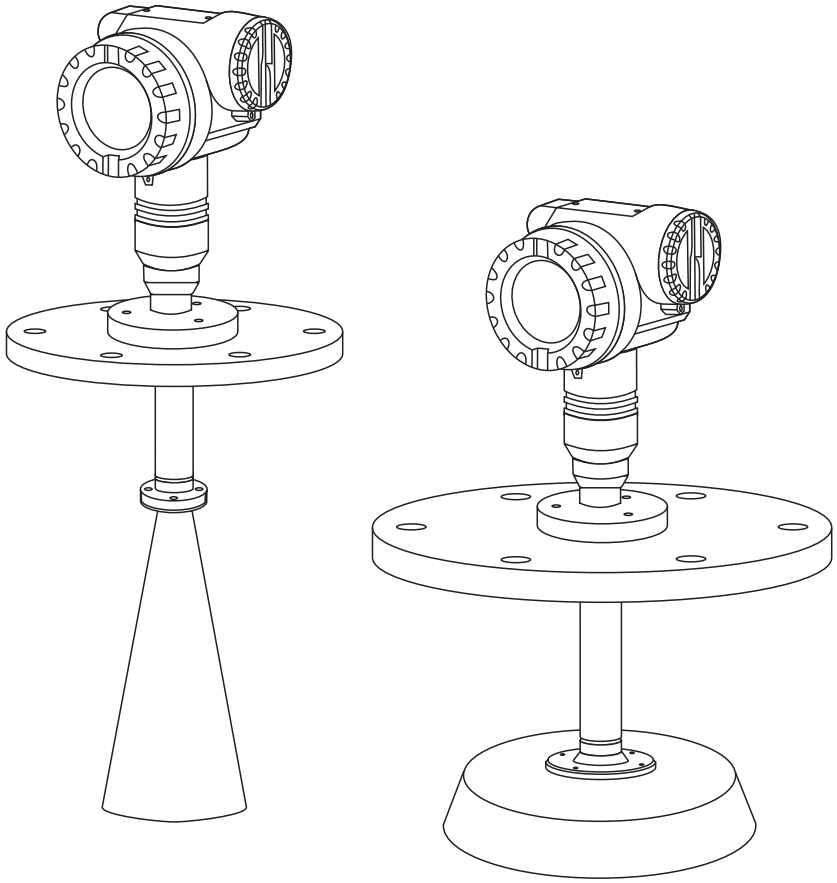

BA284F/00/EN/05.09
71094056

Valid as of software version:
01.05.00

Endress+Hauser

People for Process Automation

Brief overview

For quick and simple commissioning:

Safety Instructions	
Explanation of the warning symbols You can find special instructions at the appropriate position in the chapter in question. The positions are indicated with the icons Warning ⚠, Caution ☝ and Note ✎.	→ Page 6 ff.

▼

Installation	
The steps for installing the device and installation conditions (e.g. dimensions) can be found here.	→ Page 12 ff.

▼

Wiring	
The device is virtually completely wired on delivery.	→ Page 29 ff.

▼

Display and Operating Elements	
An overview of the position of the display and operating elements can be found here.	→ Page 37 ff.

▼

Commissioning	
In the "Commissioning" section, you learn how to switch on the device and check the functioning.	→ Page 47 ff.

▼

Commissioning via Display VU 331	
In the "Operating" section, you become familiar with the operating elements and the various setting options. Basic Setup with the VU331.	→ Page 35 ff. → Page 50 ff.

▼

Commissioning via Operating Software ToF Tool	
Basic Setup with the ToF Tool. Additional information on the operation of the ToF Tool can be found in the operating instructions BA224F/00, which can be found on the enclosed CD-ROM.	→ Page 65 ff.

▼

Fault Tracking / Trouble Shooting	
If faults occur during operation, use the checklist to localise the cause. Here you can find measures you can take yourself to take remedial action against the fault.	→ Page 73 ff.

▼

Index	
You can find important terms and keywords on the individual sections here. Use the keyword index to find quickly and efficiently the information you need.	→ Page 100 ff.

Brief operating instructions

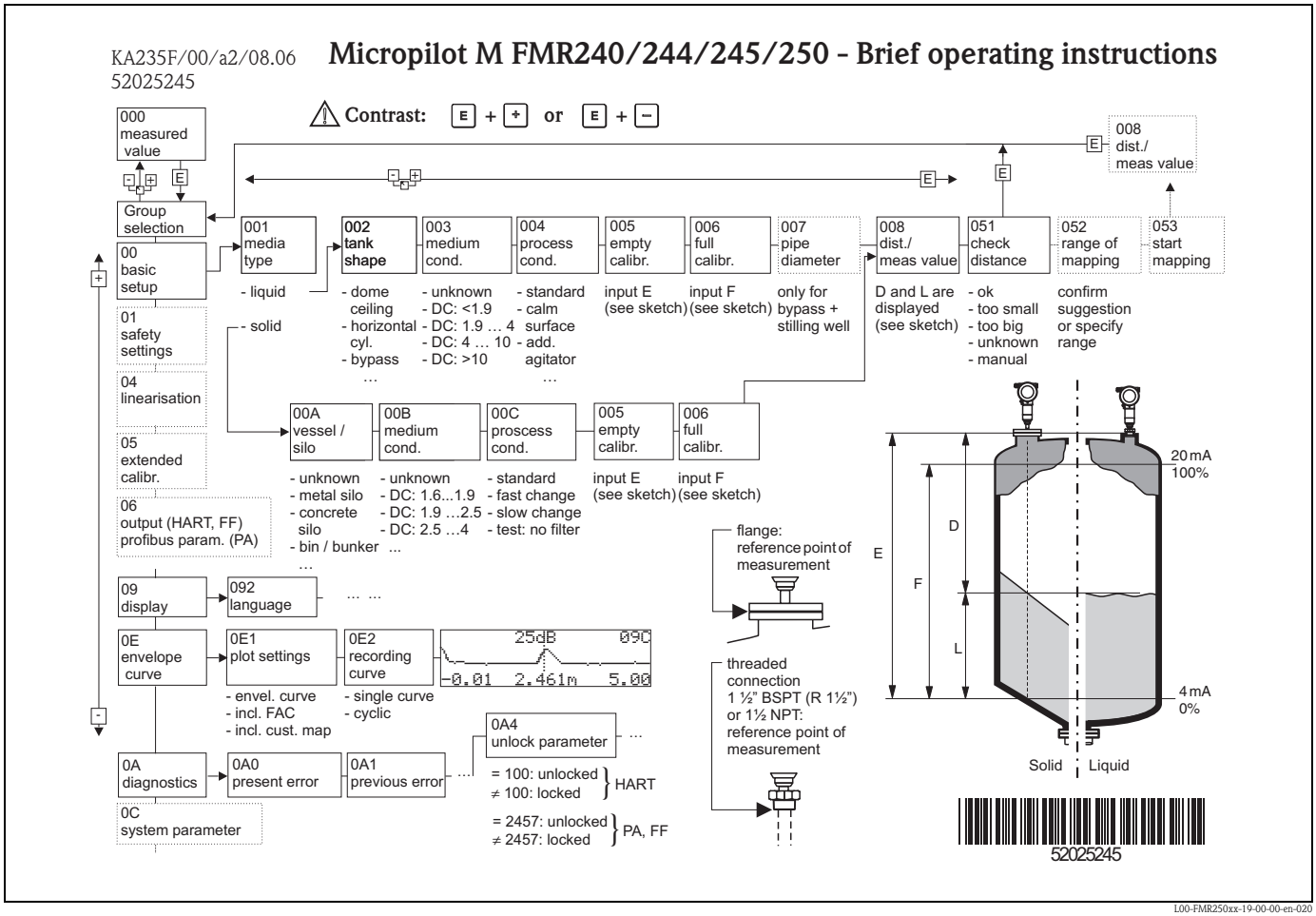

Note!
This operating manual explains the installation and initial start-up for the level transmitter. All functions that are required for a typical measuring task are taken into account here. In addition, the Micropilot M provides many other functions that are not included in this operating manual, such as optimising the measuring point and converting the measured values.

An **overview of all device functions** can be found on Page 94.

The operating manual BA291F/00/en "Description of the instrument functions for Micropilot M" provides an **extensive description of all device functions**, which can be found on the enclosed CD-ROM.

Table of contents

1 Safety instructions 6

1.1 Designated use 6
1.2 Installation, commissioning and operation 6
1.3 Operational safety 6
1.4 Notes on safety conventions and symbols 7

2 Identification 8

2.1 Device designation 8
2.2 Scope of delivery 11
2.3 Certificates and approvals 11
2.4 Registered trademarks 11

3 Installation 12

3.1 Quick installation guide 12
3.2 Incoming acceptance, transport, storage 12
3.3 Installation conditions 13
3.4 Installation instructions 22
3.5 Post-installation check 28

4 Wiring 29

4.1 Quick wiring guide 29
4.2 Connecting the measuring unit 31
4.3 Recommended connection 34
4.4 Degree of protection 34
4.5 Post-connection check 34

5 Operation 35

5.1 Quick operation guide 35
5.2 Display and operating elements 37
5.3 Local operation 40
5.4 Display and acknowledging error messages 43
5.5 HART communication 44

6 Commissioning 47

6.1 Function check 47
6.2 Switching on the measuring device 47
6.3 Basic Setup 48
6.4 Basic Setup with the VU331 50
6.5 Basic Setup with the Endress+Hauser operating program 65

7 Maintenance 69

8 Accessories 70

9 Trouble-shooting 73

9.1 Trouble-shooting instructions 73
9.2 System error messages 74
9.3 Application errors in liquids 76
9.4 Application errors in solids 78
9.5 Orientation of the Micropilot 80
9.6 Spare parts 82
9.7 Return 88
9.8 Disposal 88
9.9 Software history 88
9.10 Contact addresses of Endress+Hauser 88

10 Technical data 89

10.1 Additional technical data 89

11 Appendix 94

11.1 Operating menu HART 94
11.2 Description of functions 96
11.3 Function and system design 97

Index 100

1 Safety instructions

1.1 Designated use

The Micropilot M FMR250 is a compact level radar for the continuous, contactless measurement of predominantly solids. The device can also be freely mounted outside closed metal vessels because of its operating frequency of about 26 GHz and a maximum radiated pulsed energy of 1mW (average power output 1 µW). Operation is completely harmless to humans and animals.

1.2 Installation, commissioning and operation

The Micropilot M has been designed to operate safely in accordance with current technical, safety and EU standards. If installed incorrectly or used for applications for which it is not intended, however, it is possible that application-related dangers may arise, e.g. product overflow due to incorrect installation or calibration. For this reason, the instrument must be installed, connected, operated and maintained according to the instructions in this manual: personnel must be authorised and suitably qualified. The manual must have been read and understood, and the instructions followed. Modifications and repairs to the device are permissible only when they are expressly approved in the manual.

1.3 Operational safety

1.3.1 Hazardous areas

Measuring systems for use in hazardous environments are accompanied by separate "Ex documentation", which is an integral part of this Operating Manual. Strict compliance with the installation instructions and ratings as stated in this supplementary documentation is mandatory.

- Ensure that all personnel are suitably qualified.
- Observe the specifications in the certificate as well as national and local standards and regulations.

1.3.2 FCC approval

This device complies with part 15 of the FCC Rules. Operation is subject to the following two conditions: (1) This device may not cause harmful interference, and (2) this device must accept any interference received, including interference that may cause
undesired operation.



Caution!
Changes or modifications not expressly approved by the part responsible for compliance could void the user's authority to operate the equipment.

1.4 Notes on safety conventions and symbols

In order to highlight safety-relevant or alternative operating procedures in the manual, the following conventions have been used, each indicated by a corresponding symbol in the margin.

Safety conventions	
	**Warning!** A warning highlights actions or procedures which, if not performed correctly, will lead to personal injury, a safety hazard or destruction of the instrument
	**Caution!** Caution highlights actions or procedures which, if not performed correctly, may lead to personal injury or incorrect functioning of the instrument
	**Note!** A note highlights actions or procedures which, if not performed correctly, may indirectly affect operation or may lead to an instrument response which is not planned
Explosion protection	
	**Device certified for use in explosion hazardous area** If the device has this symbol embossed on its name plate it can be installed in an explosion hazardous area
	**Explosion hazardous area** Symbol used in drawings to indicate explosion hazardous areas. Devices located in and wiring entering areas with the designation “explosion hazardous areas” must conform with the stated type of protection.
	**Safe area (non-explosion hazardous area)** Symbol used in drawings to indicate, if necessary, non-explosion hazardous areas. Devices located in safe areas still require a certificate if their outputs run into explosion hazardous areas
Electrical symbols	
	**Direct voltage** A terminal to which or from which a direct current or voltage may be applied or supplied
	Alternating voltage A terminal to which or from which an alternating (sine-wave) current or voltage may be applied or supplied
	**Grounded terminal** A grounded terminal, which as far as the operator is concerned, is already grounded by means of an earth grounding system
	**Protective grounding (earth) terminal** A terminal which must be connected to earth ground prior to making any other connection to the equipment
	**Equipotential connection (earth bonding)** A connection made to the plant grounding system which may be of type e.g. neutral star or equipotential line according to national or company practice
	**Temperature resistance of the connection cables** States, that the connection cables must be resistant to a temperature of at least 85 °C.

2 Identification

2.1 Device designation

2.1.1 Nameplate

The following technical data are given on the instrument nameplate:

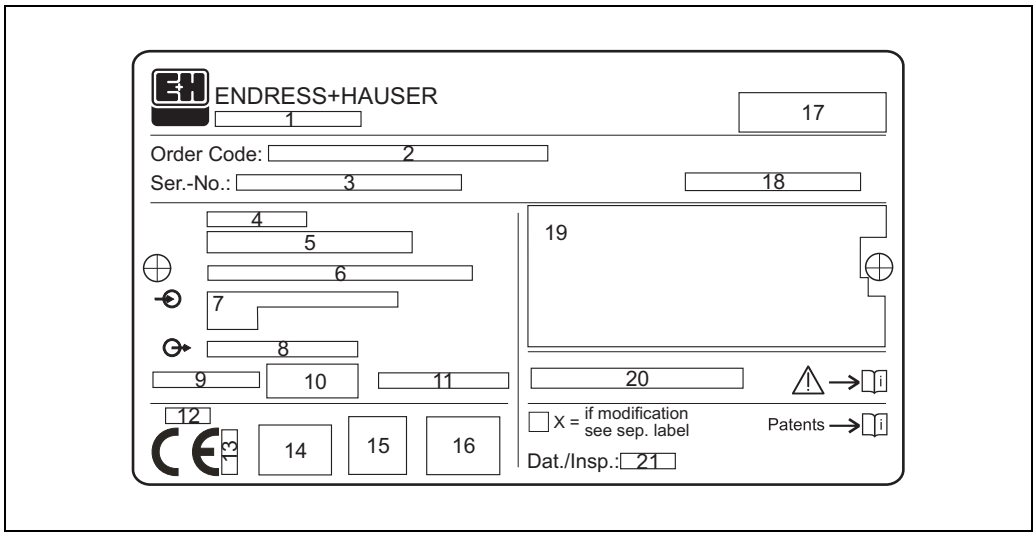

Fig. 1: Information on the nameplate of the Micropilot M (example)

1 *Instrument designation*
2 *Order code*
3 *Serial number*
4 *Process pressure*
5 *Process temperature*
6 *Length (optional)*
7 *Power supply*
8 *Current supply*
9 *Ambient temperature*
10 *Cable specification*
11 *Factory sealed*
12 *Radio equipment number*
13 *TÜV identification mark*
14 *Certificate symbol (optional) e.g. Ex, NEPSI*
15 *ertificate symbol (optional) e.g. 3A*
16 *Certificate symbol (optional) e.g. SIL, FF*
17 *Place of production*
18 *Degree of protection z.B. IP65, IP67*
19 *Certificates and approvals*
20 *Document number of safety instructions e.g. XA, ZD, ZE*
21 *Dat./Insp. xx / yy (xx = week of production, yy = year of production)*

2.1.2 Ordering structure

Ordering structure Micropilot M FMR250

10	**Approval:**	
	A	Non-hazardous area
	1	ATEX II 1/2G EEx ia IIC T6
	4	ATEX II 1/2G EEx d [ia] IIC T6
	G	ATEX II 3G EEx nA II T6
	B	ATEX II 1/2GD EEx ia IIC T6, Alu blind cover
	C	ATEX II 1/2G EEx ia IIC T6, ATEX II 1/3D
	D	ATEX II 1/2D, Alu blind cover
	E	ATEX II 1/3D
	S	FM IS-Cl.I/II/III Div.1 Gr.A-G
	T	FM XP-Cl.I/II/III Div.1 Gr.A-G
	N	CSA General Purpose
	U	CSA IS-Cl.I/II/III Div.1 Gr.A-G
	V	CSA XP-Cl.I/II/III Div.1 Gr.A-G
	Y	Special version
20	**Antenna:**	
	D	Horn 80mm/3", increased near distance dynamics
	E	Horn 80mm/3", increased near distance dynamics
	G	Parabolic 200mm/8", increased near distance dynamics
	H	Parabolic 250mm/10", increased near distance dynamics
	4	Horn 80mm/3"
	5	Horn 80mm/3"
	6	Parabolic 200mm/8"
	9	Special version, to be specified
30	**Antenna seal; Temperature:**	
	E	FKM Viton GLT; -40...200°C/-40...392 °F
	Y	Special version
40	**Antenna extension:**	
	1	Not selected
	2	250mm/10"
	3	450mm/18"
	9	Special version
50	**Process connection:**	
	GGJ	Thread EN10226 R1-1/2, 316L
	GNJ	Thread ANSI NPT1-1/2, 316L
	X3J	UNI flange DN200/8"/200, 316L max PN1/14.5lbs/1K, compatible DN200 PN10/16, 8" 150lbs, 10K 200
	X5J	UNI flange DN250/10"/250, 316L max PN1/14.5lbs/1K, compatible DN250 PN10/16, 10" 150lbs, 10K 250
	XCJ	Top target pos., UNI DN100/4"/100, 316L max PN1/14.5lbs/1K, compatible DN100 PN10/16, 4" 150lbs, 10K 100
	XEJ	Top target pos., UNI DN200/8"/200, 316L max PN1/14.5lbs/1K, compatible DN200 PN10/16, 8" 150lbs, 10K 200
	XFJ	Top target pos., UNI DN250/10"/250, 316L max PN1/14.5lbs/1K, compatible DN250 PN10/16, 10" 150lbs, 10K 250
	CMJ	DN80 PN10/16 B1, 316L flange EN1092-1 (DIN2527 C)
	CQJ	DN100 PN10/16 B1, 316L flange EN1092-1 (DIN2527 C)
	ALJ	3" 150lbs RF, 316/316L flange ANSI B16.5
	APJ	4" 150lbs RF, 316/316L flange ANSI B16.5
	KLJ	10K 80A RF, 316L flange JIS B2220
	KPJ	10K 100A RF, 316L flange JIS B2220
	YY9	Special version, to be specified

FMR250-	Product designation (part 1)

Ordering structure Micropilot M FMR250 (continued)

60	**Output; Operation:**	
	A	4-20mA HART; 4-line display VU331, envelope curve display on site
	B	4-20mA HART; w/o display, via communication
	K	4-20mA HART; prepared for FHX40, remote display (Accessory)
	C	PROFIBUS PA; 4-line display VU331, envelope curve display on site
	D	PROFIBUS PA; w/o display, via communication
	L	PROFIBUS PA; prepared for FHX40, remote display (Accessory)
	E	FOUNDATION Fieldbus; 4-line display VU331, envelope curve display on site
	F	FOUNDATION Fieldbus; w/o display, via communication
	M	FOUNDATION Fieldbus; prepared for FHX40, remote display (Accessory)
	Y	Special version
70	**Housing:**	
	A	F12 Alu, coated IP65 NEMA4X
	B	F23 316L IP65 NEMA4X
	C	T12 Alu, coated IP65 NEMA4X, separate connection compartment
	D	T12 Alu, coated IP65 NEMA4X + OVP, separate connection compartment, OVP = overvoltage protection
	Y	Special version
80	**Cable entry:**	
	2	Gland M20x1.5 (EEx d > thread M20)
	3	Thread G1/2
	4	Thread NPT1/2
	9	Special version
90	**Additional option:**	
	K	Air purge connection G1/4
	M	Air purge connection NPT1/4
	Y	Special version
FMR250-		Complete product designation

2.2 Scope of delivery

Caution!
It is essential to follow the instructions concerning the unpacking, transport and storage of measuring instruments given in the chapter "Incoming acceptance, transport, storage" on Page 12!

The scope of delivery consists of:
- Assembled instrument
- Endress+Hauser oprating program (on the enclosed CD-ROM
- Accessories (→ Chap. 8)

Accompanying documentation:
- Short manual (basic setup/troubleshooting): housed in the instrument
- Operating manual (this manual)
- Approval documentation: if this is not included in the operating manual.

Note!
The operating manual "Description of Instrument Functions" you can be found on the enclosed CD-ROM.

2.3 Certificates and approvals

CE mark, declaration of conformity
The device is designed to meet state-of-the-art safety requirements, has been tested and left the factory in a condition in which it is safe to operate. The device complies with the applicable standards and regulations as listed in the EC declaration of conformity and thus complies with the statutory requirements of the EG directives. Endress+Hauser confirms the successful testing of the device by affixing to it the CE mark.

2.4 Registered trademarks

KALREZ®, VITON®, TEFLON®
Registered trademark of the company, E.I. Du Pont de Nemours & Co., Wilmington, USA

TRI-CLAMP®
Registered trademark of the company, Ladish & Co., Inc., Kenosha, USA

HART®
Registered trademark of HART Communication Foundation, Austin, USA

ToF®
Registered trademark of the company Endress+Hauser GmbH+Co. KG, Maulburg, Germany

PulseMaster®
Registered trademark of the company Endress+Hauser GmbH+Co. KG, Maulburg, Germany

PhaseMaster®
Registered trademark of the company Endress+Hauser GmbH+Co. KG, Maulburg, Germany

3 Installation

3.1 Quick installation guide

At mounting adjust the marking at the instrument flange!

Installation in vessel (free space):
Mark on process connector facing the nearest vessel wall!

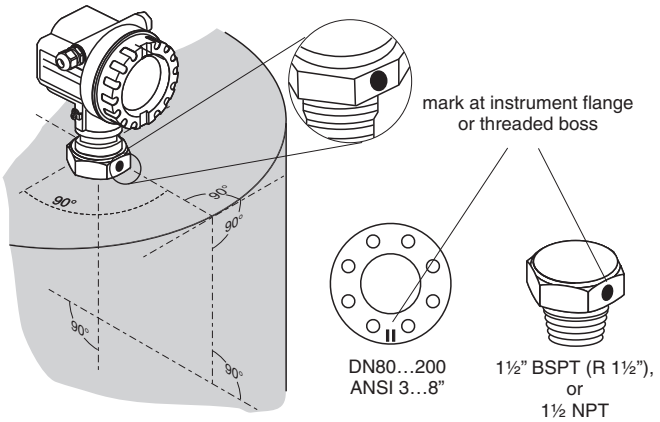

Note!
At version with top target positioner, the marker is at the housing adapter (opposite the air purge connection).

Turn housing

The housing can be turned 350° in order to simplify access to the display and the terminal compartment

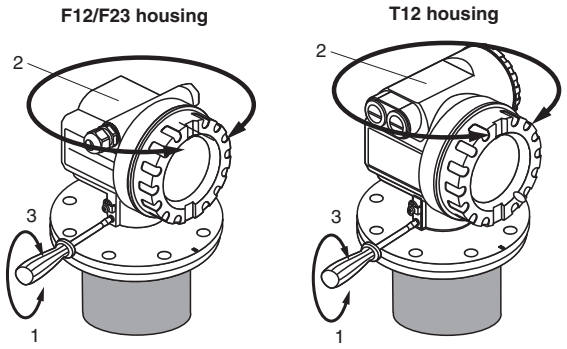

Allen key 4 mm / 0.1"

L00-FMR250xx-17-00-00-en-011

3.2 Incoming acceptance, transport, storage

3.2.1 Incoming acceptance

Check the packing and contents for any signs of damage.
Check the shipment, make sure nothing is missing and that the scope of supply matches your order.

3.2.2 Transport

Caution!
Follow the safety instructions and transport conditions for instruments of more than 18 kg.
Do not lift the measuring instrument by its housing in order to transport it.

3.2.3 Storage

Pack the measuring instrument so that is protected against impacts for storage and transport. The original packing material provides the optimum protection for this.
The permissible storage temperature is -40 °C…+80 °C.

3.3 Installation conditions

3.3.1 Dimensions

Housing dimensions

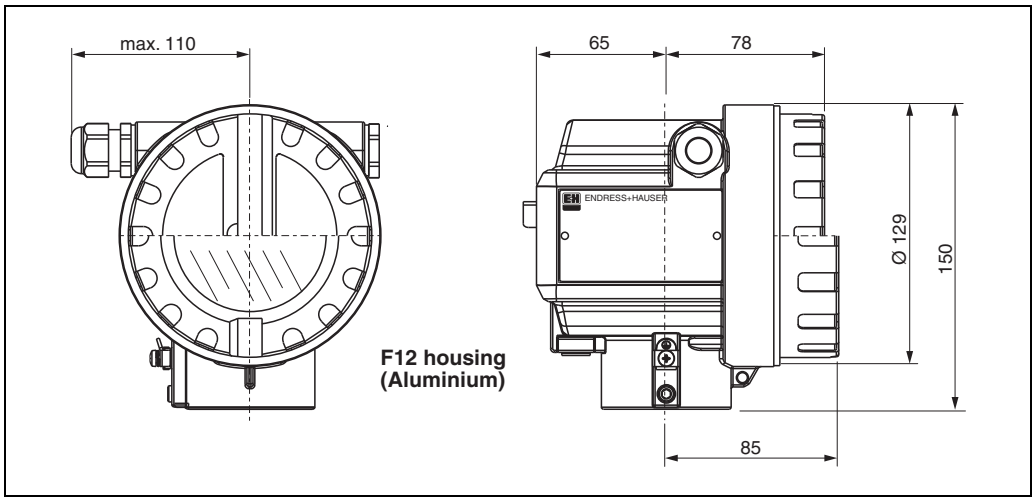

L00-F12xxxx-06-00-00-en-001

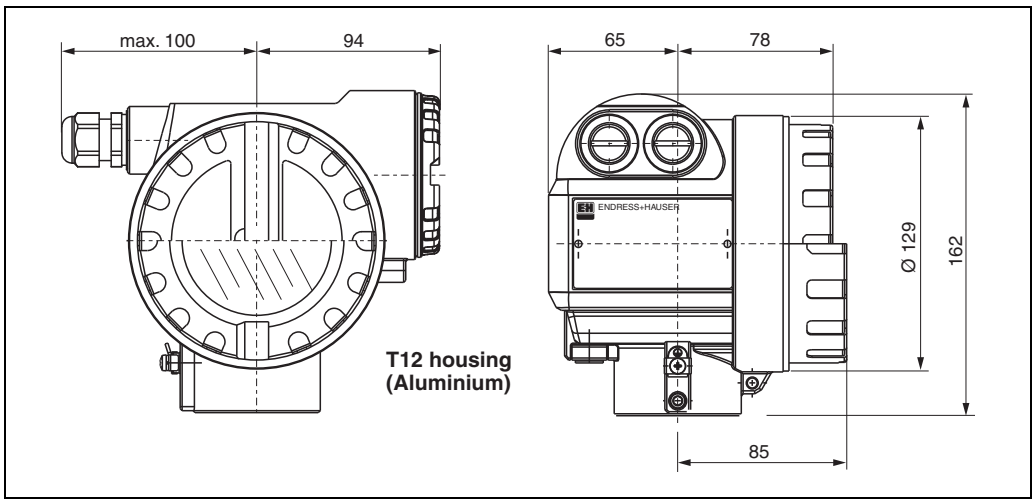

L00-T12xxxx-06-00-00-en-001

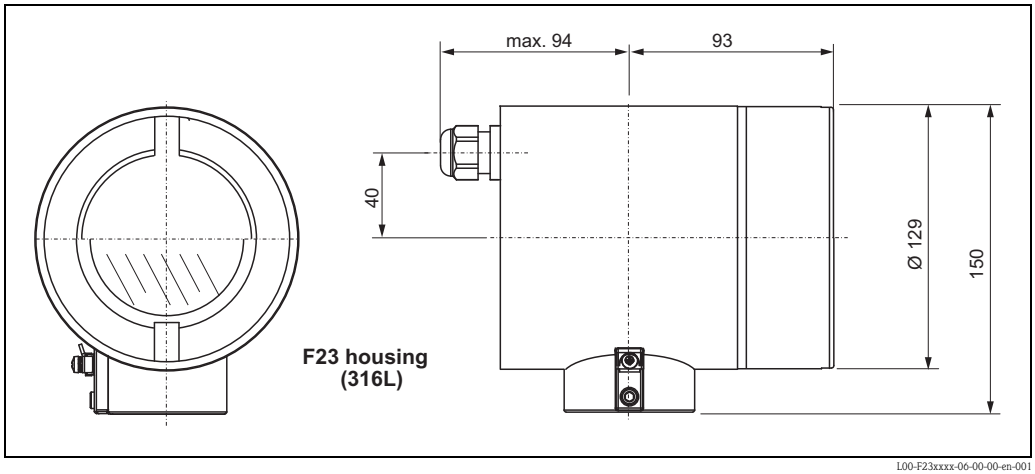

L00-F23xxxx-06-00-00-en-001

Micropilot M FMR250 - process connection and antenna (option "4, 5, 6")

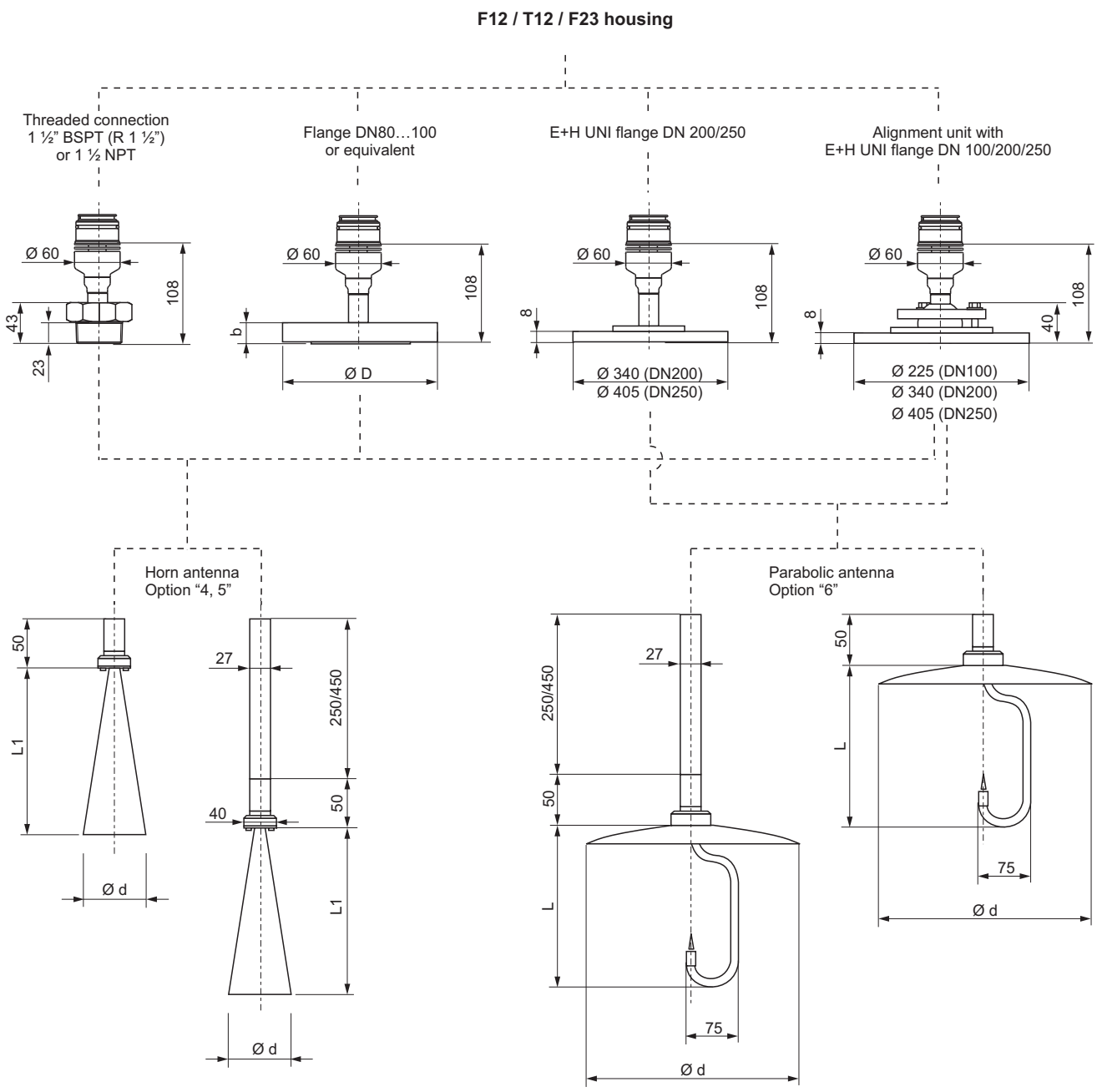

Horn antenna

Antenna size	80 mm (3")	100 mm (4")
L1 [mm]	211	430
d [mm]	75	95

Parabolic antenna

Antenna size	200mm/8"
L [mm]	205
d [mm]	197

Flange to EN 1092-1 (agreeable to DIN 2527)

Flange	DN 80	DN 100
b [mm]	20	20
D [mm]	200	220

for PN10/16

Flange to ANSI B16.5

Flange	3"	4"
b [mm]	23.9	23.9
D [mm]	190.5	228.6

for 150 lbs

Flange to JIS B2220

Flange	DN 80	DN 100
b [mm]	18	18
D [mm]	185	210

for 10K

a0011475-en

Micropilot M FMR250 - process connection and antenna (option "D, E, G, H")

F12 / T12 / F23 housing

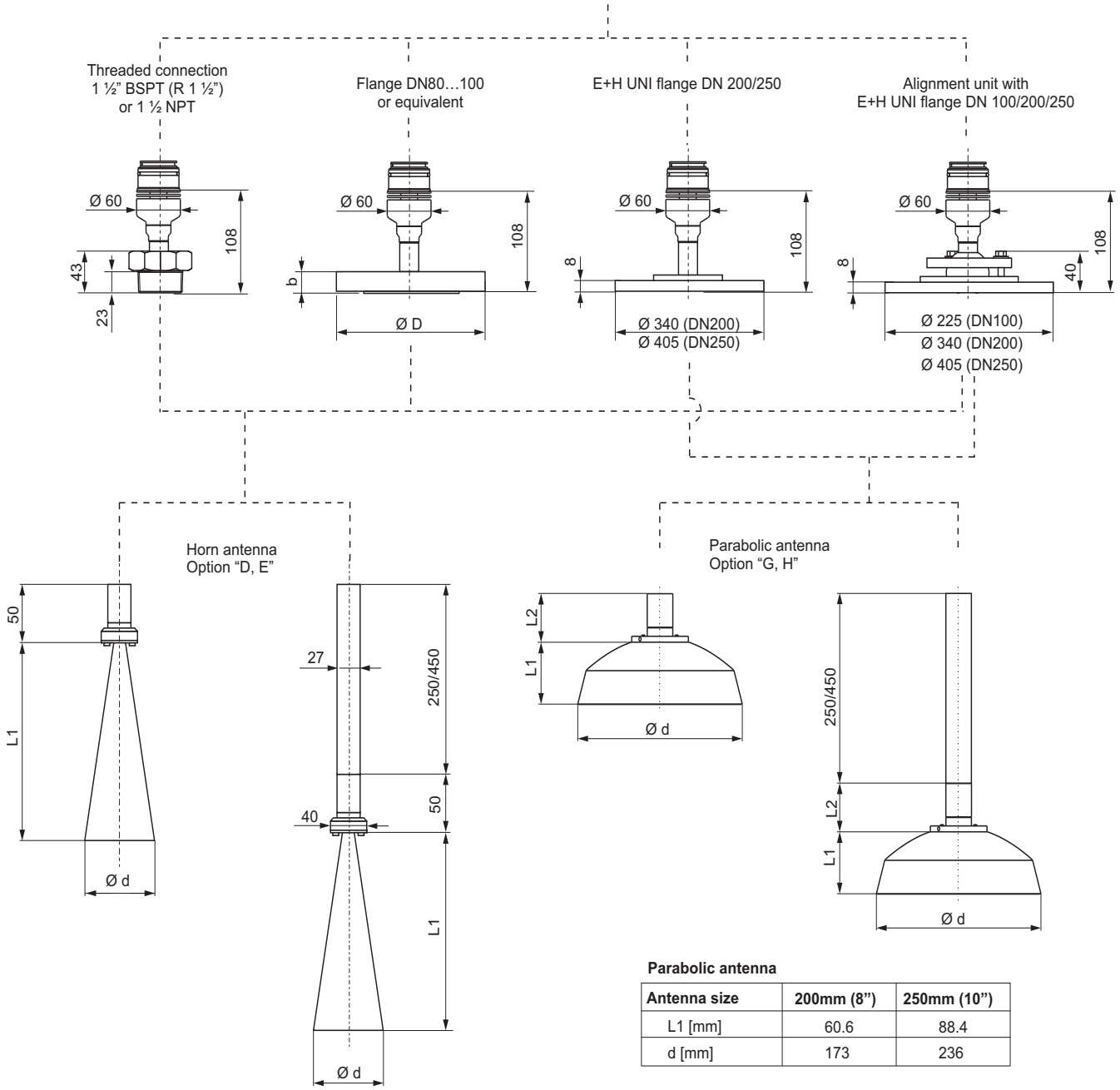

Horn antenna

Antenna size	80 mm (3")	100 mm (4")
L1 [mm]	211	430
d [mm]	75	95

Parabolic antenna

Antenna size	200mm (8")	250mm (10")
L1 [mm]	60.6	88.4
d [mm]	173	236

Parabolic antenna

Antenna size / flange	200 mm (8") UNI	250 mm (10") UNI
L2 [mm]	50	37

Flange to EN 1092-1 (agreeable to DIN 2527)

Flange	DN 80	DN 100
b [mm]	20	20
D [mm]	200	220

for PN10/16

Flange to ANSI B16.5

Flange	3"	4"
b [mm]	23.9	23.9
D [mm]	190.5	228.6

for 150 lbs

Flange to JIS B2220

Flange	DN 80	DN 100
b [mm]	18	18
D [mm]	185	210

for 10K

a0011476-en

E+H UNI flange

The number of bolts has sometimes been reduced. The bolt-holes have been enlarged for adaption of dimensions, therefore, the flange needs to be properly aligned to the counterflange before the bolts are tightened.

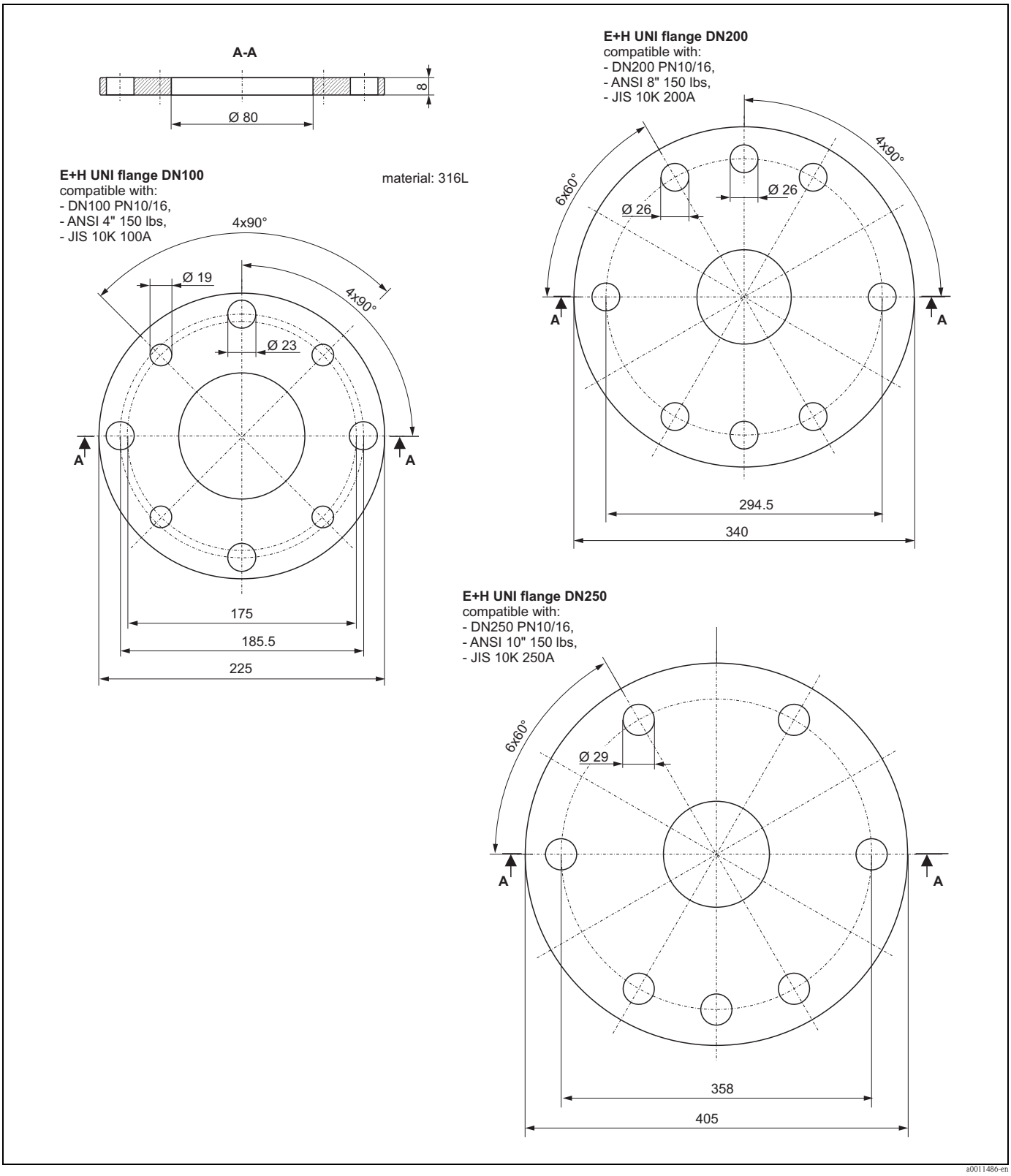

Top target positioner with E+H UNI flange

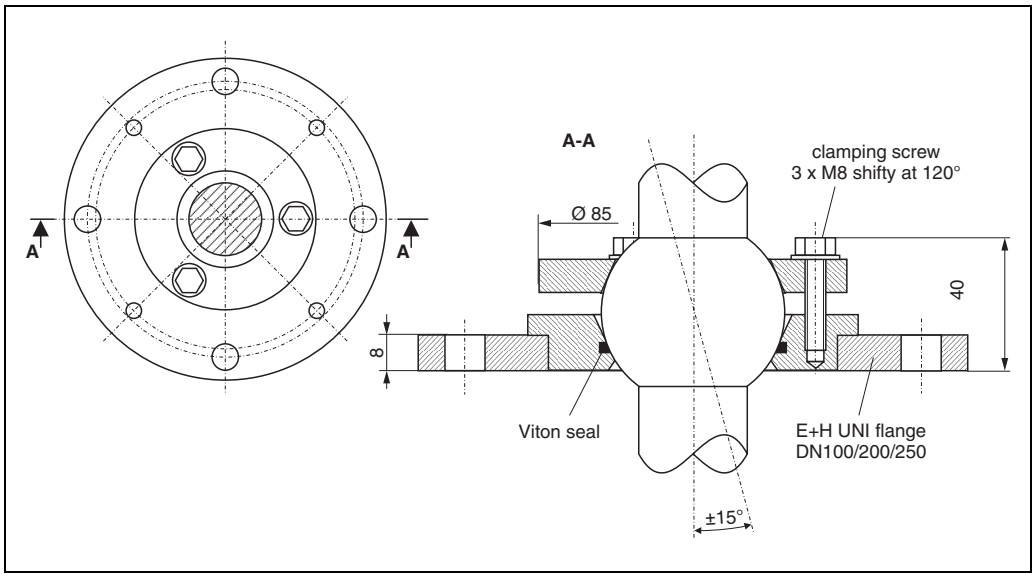

3.3.2 Engineering hints

Orientation

- Recommended distance (1) wall – **outer edge** of nozzle: ~1/6 of vessel diameter. However, the device should not, under any circumstances, be mounted less than 20 cm/ 8“ from the vessel wall.
  Note!
  If the tank wall is not smooth (corrugated metal, welding seams, irregularities etc.) the distance from the wall should be kept as large as possible. If necessary, use an alignment unit to prevent interference reflections from the tank wall.
- Not in the centre (3), interference can cause signal loss.
- Not above the fill stream (4).
- It is recommended to use a weather protection cover (2) in order to protect the transmitter from direct sun or rain. Assembly and disassembly is simply done by means of a tension clamp (→ Chap. 8 on Page 70).
- In extremely dusty applications, the integrated air purge connection can prevent clogging of the antenna.

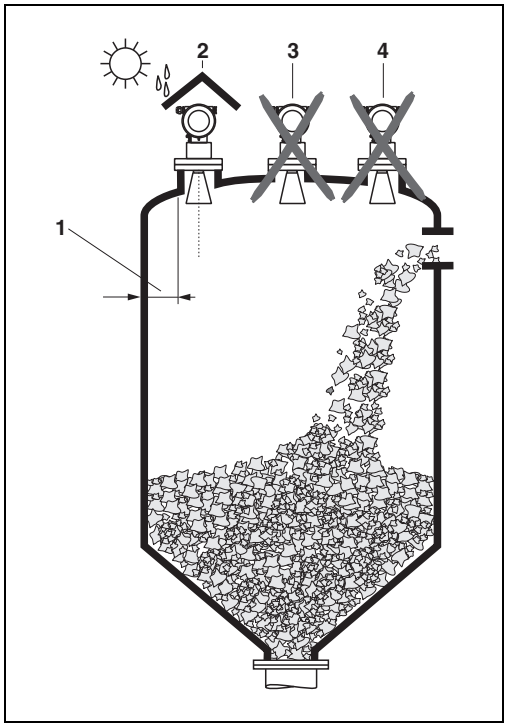

L00-FMR250xx-17-00-00-xx-003

Vessel installations

- Avoid any installations (1), like limit switches, struts, etc., inside the signal beam (refer to beam angle see "" on).
- Symmetrical installations (2), i.e. reinforcing rings, heating coils, etc., can also interfere with the measurement.

Optimization options

- Antenna size: the bigger the antenna, the smaller the beam angle, the less interference echoes.
- Mapping: the measurement can be optimized by means of electronic suppression of interference echoes.
- Antenna alignment: refer to "Optimum mounting position"
- In devices with top target positioner, the sensor can be optimally aimed within the vessel and/or interference reflections can be avoided.
  The max. angle β is ±15°.
- In particular, sensor alignment serves to:
  – prevent interference reflections
  – extend the maximum possible measuring range in conical outlets.
- Metallic screens (3) mounted at a slope spread the radar signals and can, therefore, reduce interference echoes.

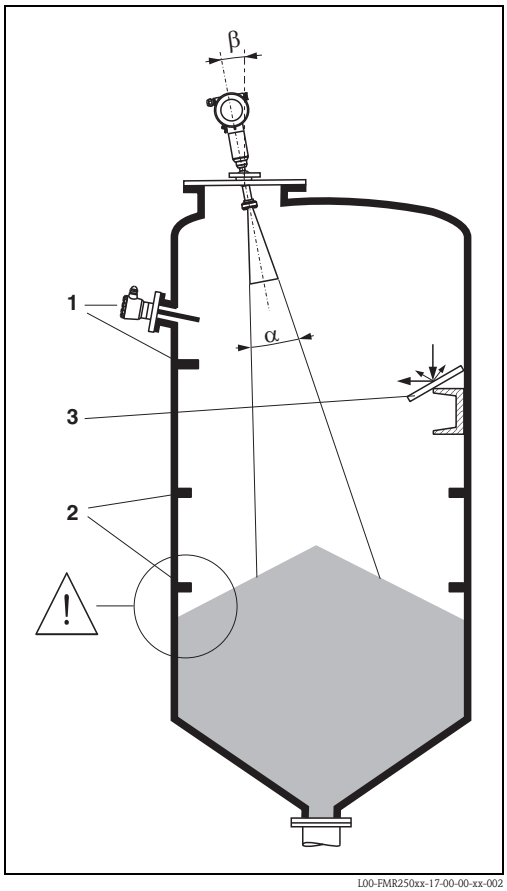

L00-FMR250xx-17-00-00-xx-002

Please contact Endress+Hauser for further information.

Measurement in a plastic tank

If the outer wall of the tank is made of a non-conductive material (e.g. GRP), microwaves can also be reflected off interfering installations outside the signal beam (e.g. metallic pipes (1), ladders (2), grates (3), ...). Therefore, there should be no such interfering installations in the signal beam.

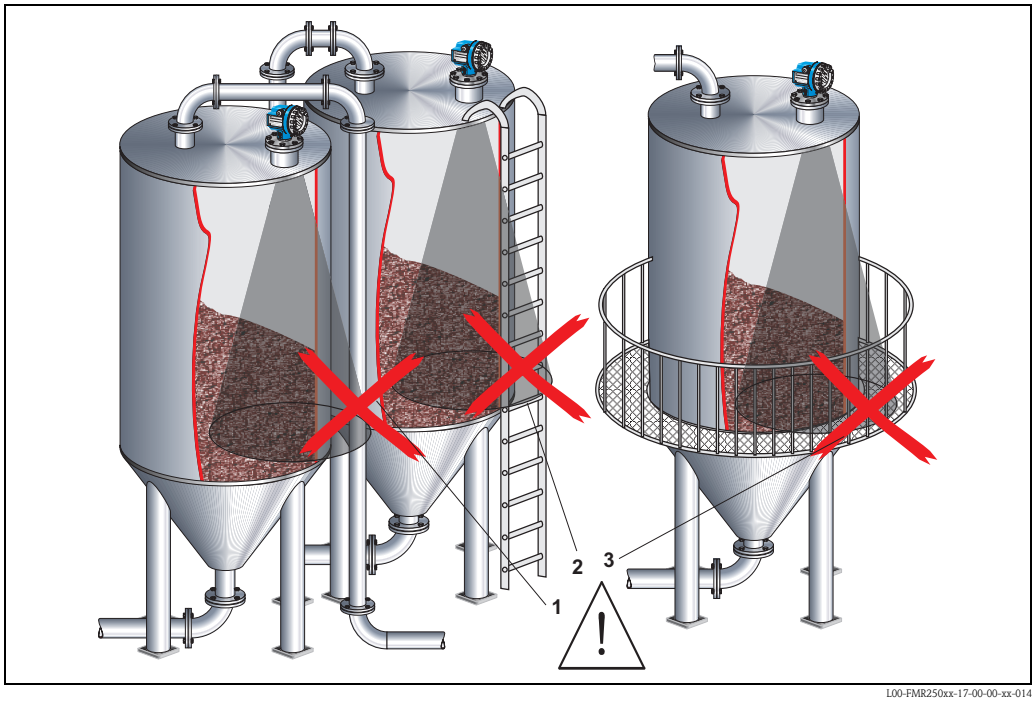

Please contact Endress+Hauser for further information.

Beam angle

The beam angle is defined as the angle a where the energy density of the radar waves reaches half the value of the maximum energy density (3dB-width). Microwaves are also emitted outside the signal beam and can be reflected off interfering installations. Beam diameter **W** as function of antenna type (beam angle α) and measuring distance **D**:

Antenna size FMR250	Horn antenna		Parabolic antenna	
	80 mm (3")	100 mm (4")	200 mm (8")	250 mm (10")
Beam angle α	10°	8°	4°	3.5°

Measuring distance (D)	Beamwidth diameter (W)			
	80 mm (3")	100 mm (4")	200 mm (8")	250 mm (10")
5 m (16 ft)	0.87 m (2.80 ft)	0.70 m (2.24 ft)	0.35 m (1.12 ft)	0.3 m (0.98 ft)
10 m (32 ft)	1.75 m (5.60 ft)	1.40 m (4.48 ft)	0.70 m (2.23 ft)	0.61 m (2 ft)
15 m (49 ft)	2.62 m (8.57 ft)	2.10 m (6.85 ft)	1.05 m (3.42 ft)	0.92 m (3.01 ft)
20 m (65 ft)	3.50 m (11.37 ft)	2.80 m (9.09 ft)	1.40 m (4.54 ft)	1.22 m (4 ft)
30 m (98 ft)	5.25 m (17.15 ft)	4.20 m (13.71 ft)	2.10 m (6.84 ft)	1.83 m (6 ft)
40 m (131 ft)	7.00 m (22.92 ft)	5.59 m (18.32 ft)	2.79 m (9.15 ft)	2.44 m (8 ft)
50 m (164 ft)	8.75 m (28.70 ft)	6.99 m (22.94 ft)	3.50 m (11.45 ft)	3.06 m (10.04 ft)

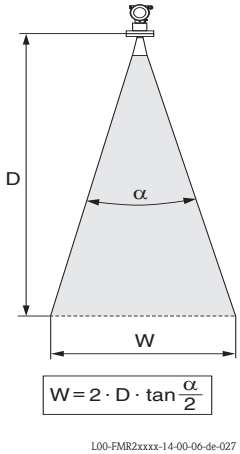

Measuring conditions

- The measuring range begins, where the beam hits the vessel bottom. Particularly with dish bottoms or conical outlets the level cannot be detected below this point.
  The maximum measuring range can be increased in such applications by using an alignment unit (see Page 18).
- In case of media with a low dielectric constant (groups A and B), the vessel bottom can be visible through the medium at low levels. In order to guarantee the required accuracy in these cases, it is recommended to position the zero-point at a distance **C** =50...150 mm above the vessel bottom (see Fig.).
- In principle it is possible to measure up to the tip of the antenna with the FMR250. However, due to considerations regarding abrasion and build-up and depending on the orientation of the product surface (angel of repose), the end of the measuring range should be at a distance of approx. **A**=400mm (see Fig.). If required, and if some conditions (high DC value, flat angle of repose) are met, shorter distances can be achieved.

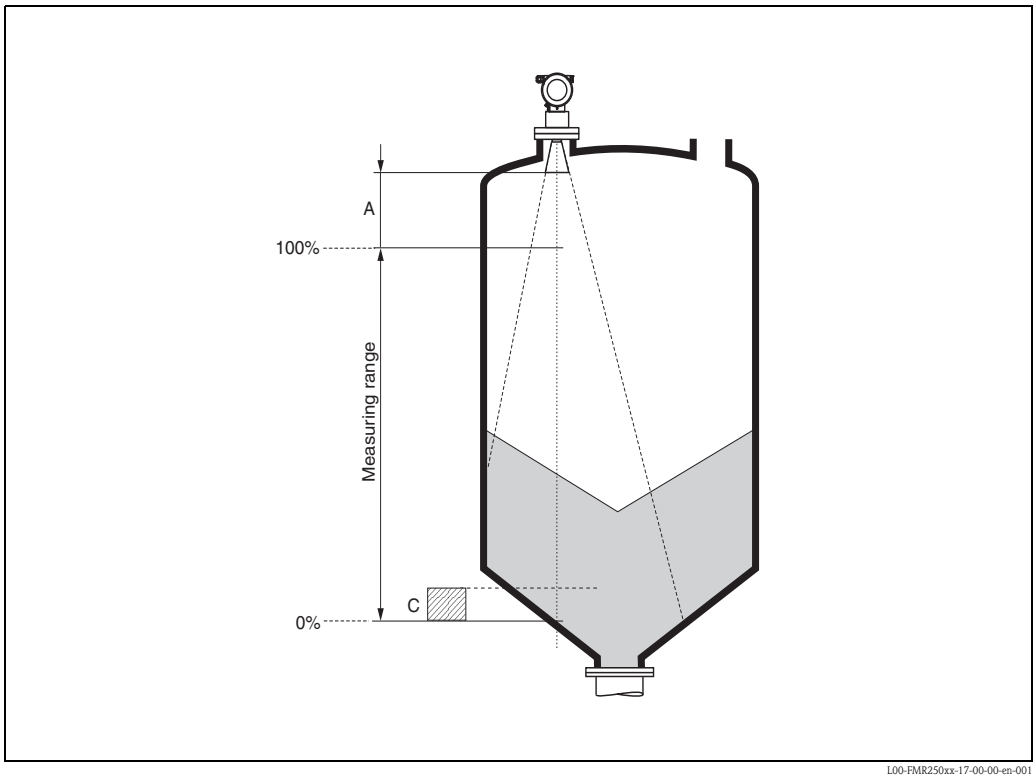

L00-FMR250xx-17-00-00-en-001

Measuring range

The usable measuring range depends on the size of the antenna, the reflectivity of the medium, the mounting location and eventual interference reflections. The maximum configurable range is 70 m (229 ft) for Micropilot M FMR250.

To achieve an optimised Signal strength it is recommended to use an antenna with as large as possible diameter (DN200/8" parabolic antenna, DN100/4" horn).

Reduction of the max. possible measuring range through:
- Media with poor reflection properties (= small DC). For examples refer to table 1.
- Angle of repose.
- Extremely loose surfaces of bulk solids, e.g. bulk solids with low bulk weight for pneumatic filling.
- Build-up, above all of moist products.

Table 1:
The following table describes the media groups and the dielectric constant εr.

Media group	DC (εr)	Examples	Signal attenuation
A	1.6...1.9	– Plastic granulate – White lime, special cement – Sugar	19...16 dB
B	1.9...2.5	– Portland cement, plaster	16...13 dB
C	2.5...4	– Grain, seeds – Ground stones – Sand	13...10 dB
D	4...7	– Naturally moist (ground) stones, ores – Salt	10...7 dB
E	> 7	– Metallic powder – Carbon black – Coal	< 7 dB

The respective lower group applies for very loose or loosened bulk solids.

3.4 Installation instructions

3.4.1 Mounting kit

For the mounting , you will require the following tool:
- The tool for flange mounting or
- a key AF60 for threaded boss and
- 4 mm/0.1" Allen wrench for turning the housing.

3.4.2 Installation in vessel (free space)

Optimum mounting position

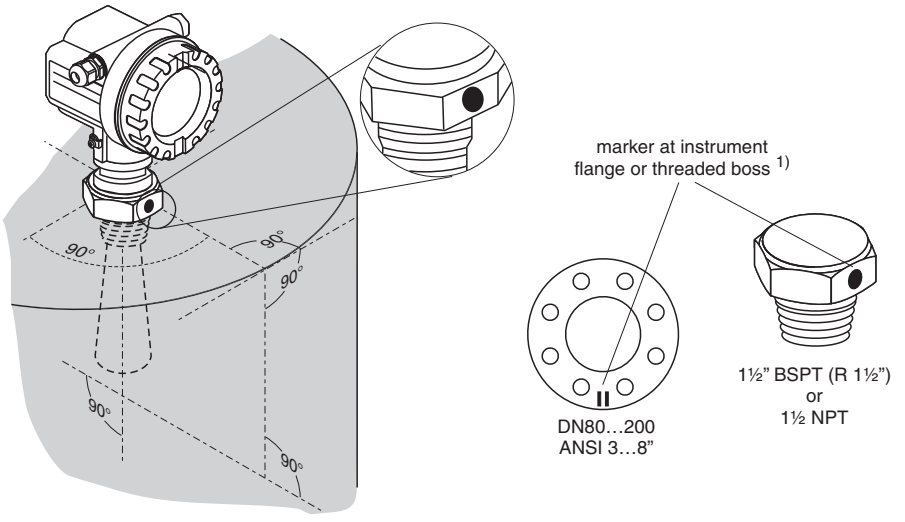

1) at version with top target positioner, the marker is at the housing adapter (opposite the air purge connection)

L00-FMR250xx-17-00-00-en-009

Standard installation FMR250 with horn antenna

- Observe installation instructions on Page 18.
- Marker is aligned towards vessel wall.
- The marker is always exactly in the middle between two bolt-holes in the flange.
- After mounting, the housing can be turned 350° in order to simplify access to the display and the terminal compartment.
- The horn antenna should protrude from the nozzle.
  If this is not possible for mechanical reasons, larger nozzle heights can be accepted.
  Note!
  Please contact Endress+Hauser for application with higher nozzle.
- **Vertical horn antenna.**
  Ideally, the horn antenna should be installed vertically.
  To avoid interference reflections or for optimum alignment within the vessel, the FMR250 with optional top target positioner can be swiveled by 15° in all directions.

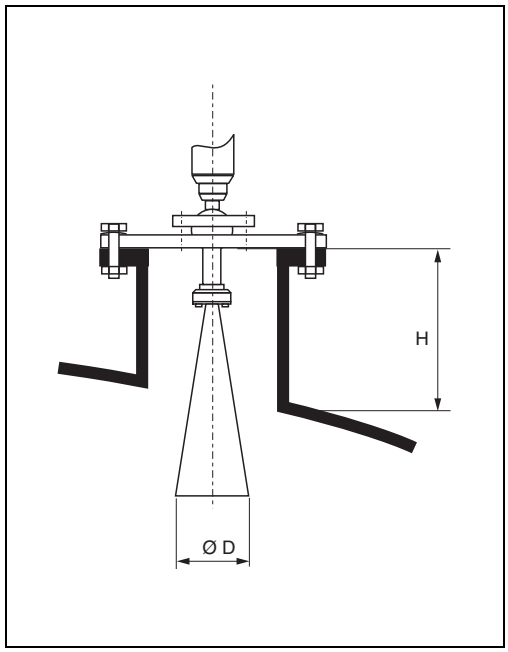

L00-FMR250xx-17-00-00-en-004

Antenna size	80 mm / 3"	100 mm / 4"
D [mm / inch]	75 (3)	95 (3.7)
H [mm (inch)] (without antenna extension)	< 260 (< 10.2)	< 480 (< 18.8)

Standard installation FMR250 with parabolic antenna

- Observe installation instructions on Page 18.
- Marker is aligned towards vessel wall.
- The marker is always exactly in the middle between two bolt-holes in the flange.
- After mounting, the housing can be turned 350° in order to simplify access to the display and the terminal compartment.
- Ideally the parabolic antenna should protrude from the nozzle (1).
  Particularly when using the top target positioner, please ensure that the parabolic reflector is protruding from the nozzle/roof so as not to inhibit alignment.
  Note!
  For applications with higher nozzle it may be necessary to install the parabolic antenna completely in the nozzle (2), including the RF-wave guide (3) for the antenna (option "6").
  The maximum height of the nozzle (H_{max}) to the parabolic mirror (option "G, H") should not exceed 500 mm. Interfering edges within the nozzle should be avoided.
- **Vertical parabolic antenna.**
  Ideally, the parabolic antenna should be installed vertically.
  To avoid interference reflections or for optimum alignment within the vessel, the FMR250 with optional top target positioner can be swiveled by 15° in all directions.

Parabolic antenna (Option "6")

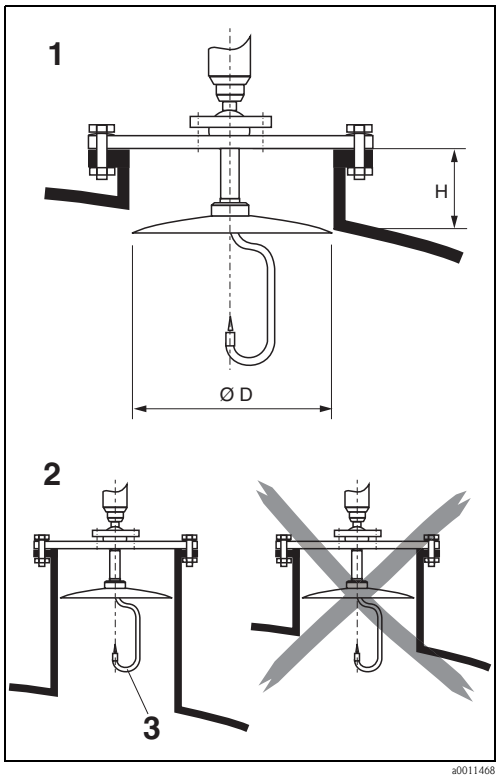

Parabolic antenna (Option "G, H")

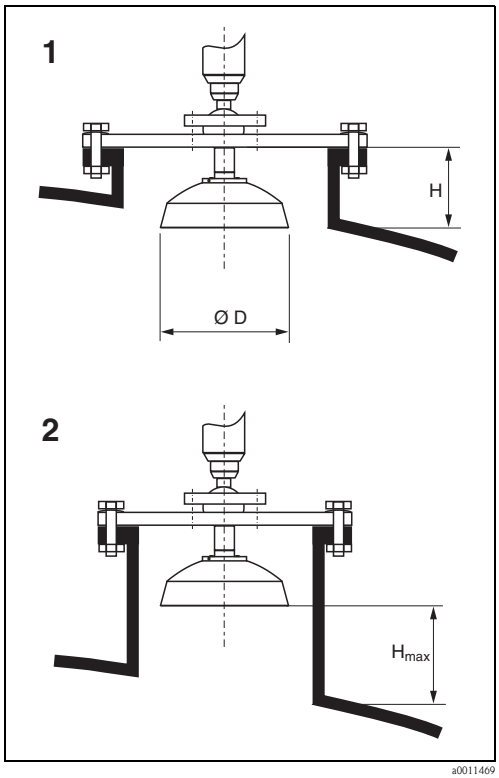

Parabolic antenna	Option "6"	Option "G"	Option "H"
Antenna size	200 mm (8")	200 mm (8")	250 mm (10")
D [mm / inch]	197 (7.75)	173 (6.81)	236 (9.29)
H [mm (inch)] (without antenna extension)	< 50 (< 1.96)	< 50 (< 1.96)	< 50 (< 1.96)

Examples for installation with small flange (< parabolic reflector) for parabolic antenna (option "6")

standard installation

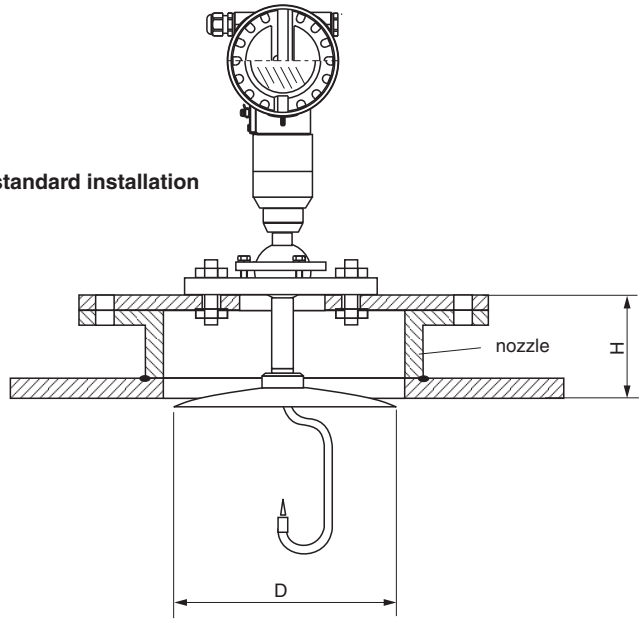

Antenna size	200 mm (8")
D [mm (inch)]	197 (7.75)
H [mm (inch)] 1)	< 50 (< 1.96)

1) without antenna extension

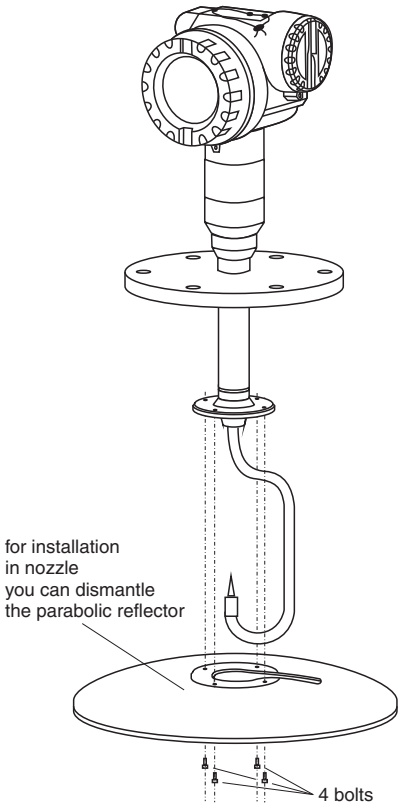

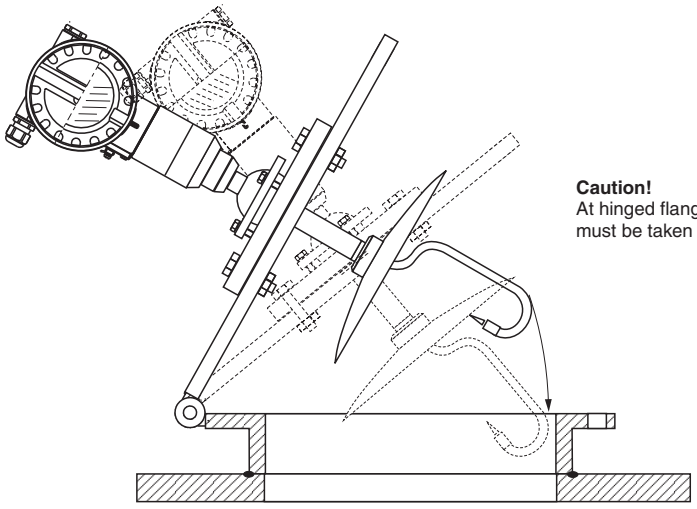

Caution!
At hinged flanges, the length of the antenna must be taken into account!

a0011470-en

Examples for installation with small flange (< parabolic reflector) for parabolic antenna (option "G, H")

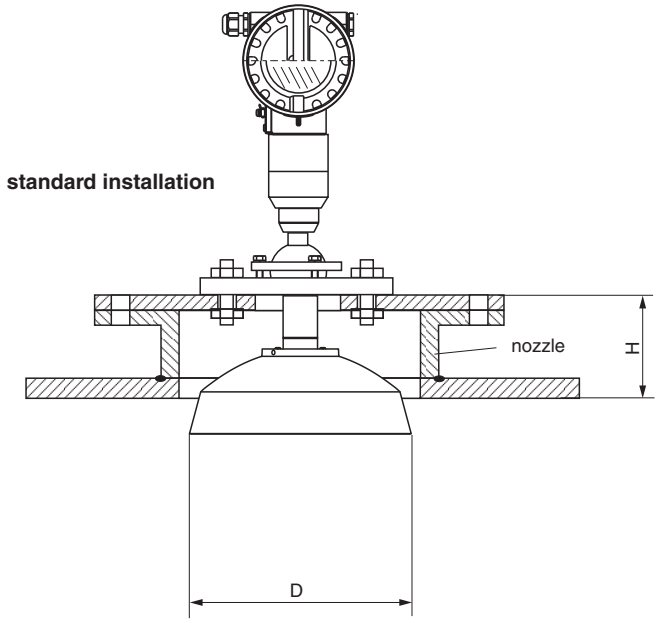

Antenna size	200 mm (8")	250 mm (10")
D [mm (inch)]	173 (6.81)	236 (9.29)
H [mm (inch)] 1)	< 50 (< 1.96)	< 50 (< 1.96)

1) without antenna extension

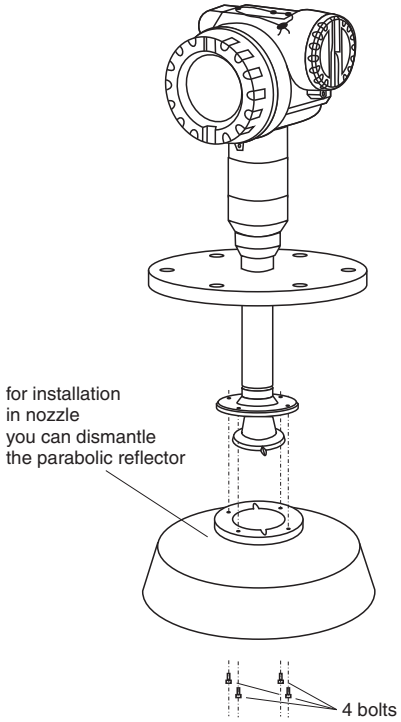

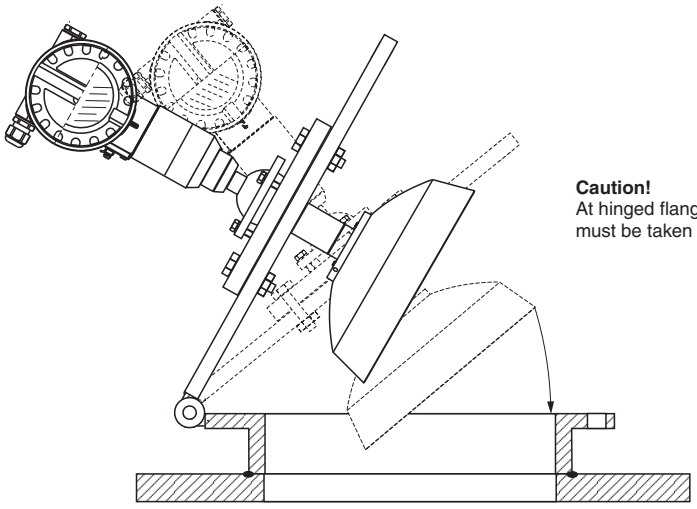

Caution!
At hinged flanges, the length of the antenna must be taken into account!

a0011471-en

FMR250 with top target positioner

Using top target positioner it is possible to tilt the antenna axis by up to 15° in all directions. The top target positioner is used for the optimum alignment of the radar beam with the bulk solids surface.

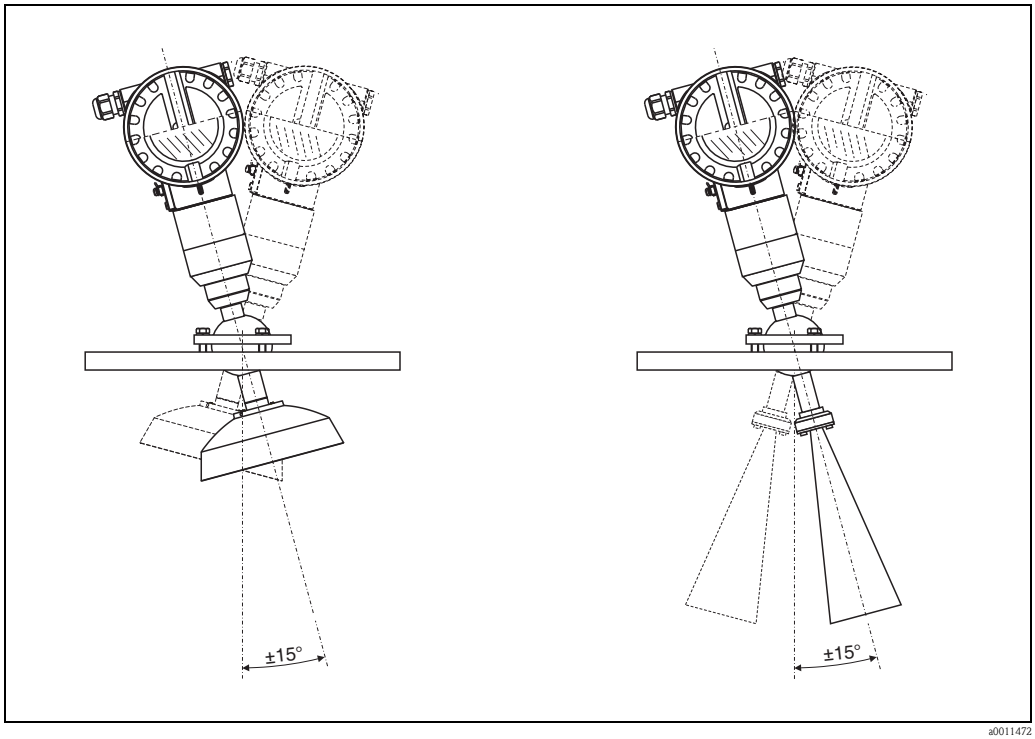

a0011472

Align antenna axis:

1. Loosen screws.
2. Align antenna axis (here this is possible up to max. ±15° in all directions).
3. Tighten screws.

Integrated air purge connection

In extremely dusty applications, the integrated air purge connection can prevent clogging of the antenna. Pulsed operation is recommended.

- Pulsed operation:
  max. pressure of purge air: 6 bar abs.
- Permanent operation:
  recommended pressure range of the purge air:
  200...500 mbar.

Caution!
Make sure to use dry purge air.

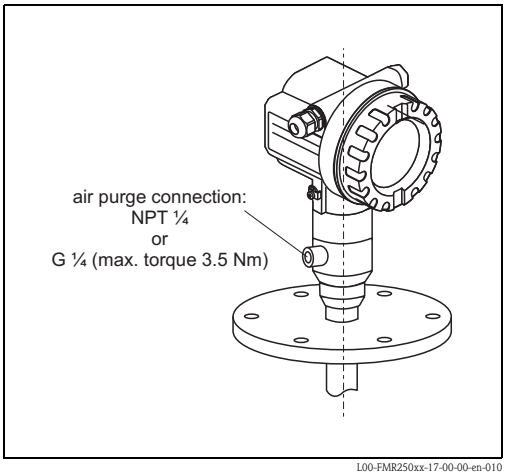

L00-FMR250xx-17-00-00-en-010

3.4.3 Turn housing

After mounting, the housing can be turned 350° in order to simplify access to the display and the terminal compartment. Proceed as follows to turn the housing to the required position:
- Undo the fixing screws (1)
- Turn the housing (2) in the required direction
- Tighten up the fixing screws (1)

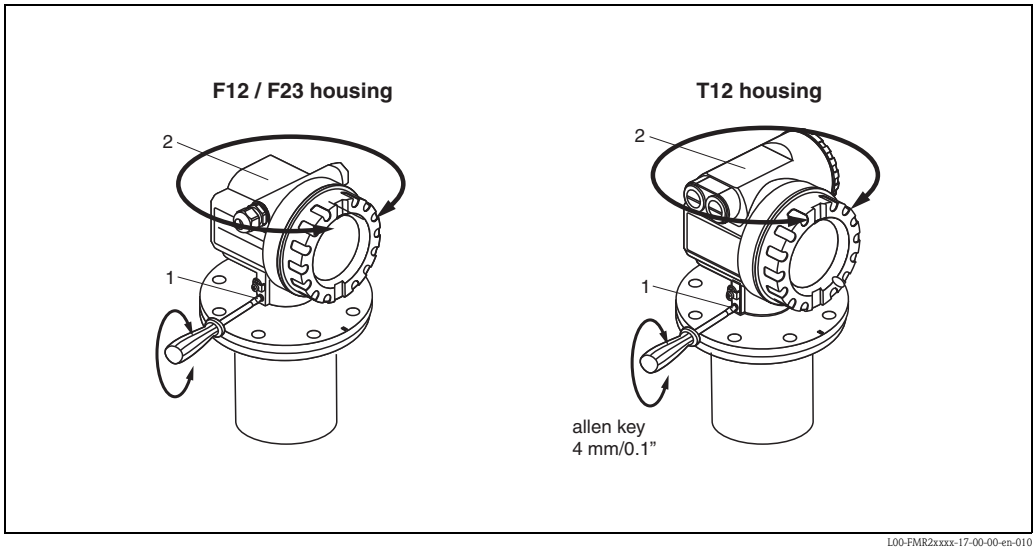

L00-FMR2xxxx-17-00-00-en-010

3.5 Post-installation check

After the measuring instrument has been installed, perform the following checks:
- Is the measuring instrument damaged (visual check)?
- Does the measuring instrument correspond to the measuring point specifications such as process temperature/pressure, ambient temperature, measuring range, etc.?
- Is the flange marking correctly aligned? (→ Page 12)
- Have the flange screws been tightened up with the respective tightening torque?
- Are the measuring point number and labeling correct (visual check)?
- Is the measuring instrument adequately protected against rain and direct sunlight (→ Page 70)?

4 Wiring

4.1 Quick wiring guide

Wiring in F12/F23 housing

Caution!

Before connection please note the following:

- The power supply must be identical to the data on the nameplate (1).
- Switch off power supply before connecting up the device.
- Connect Equipotential bonding to transmitter ground terminal before connecting up the device.
- Tighten the locking screw:
  It forms the connection between the antenna and the housing ground potential.

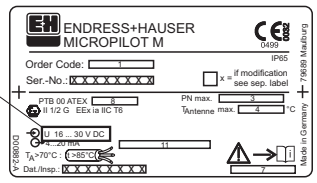

When you use the measuring system in hazardous areas, make sure you comply with national standards and the specifications in the safety instructions (XA's). Make sure you use the specific cable gland.

EX

On devices supplied with a certificate, the explosion protection is designed as follows:

- Housing F12/F23 - EEx ia:
  Power supply must be intrinsically safe.
- The electronics and the current output are galvanically separated from the antenna circuit.

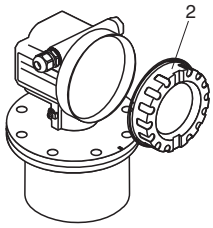

Connect up the Micropilot M as follows:

- Unscrew housing cover (2).
- Remove any display (3) if fitted.
- Remove cover plate from terminal compartment (4).
- Pull out terminal module slightly using pulling loop.
- Insert cable (5) through gland (6).
  A standard installation cable is sufficient if only the analogue signal is used. Use a screened cable when working with a superimposed communications signal (HART).

Unplug display connector!

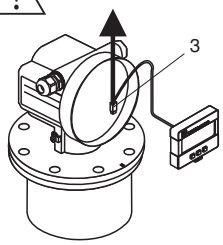

EX

Only ground screening of the line (7) on sensor side.

- Make connection (see pin assignment).
- Re-insert terminal module.
- Tighten cable gland (6).
- Tighten screws on cover plate (4).
- Insert display if fitted.
- Screw on housing cover (2).
- Switch on power supply.

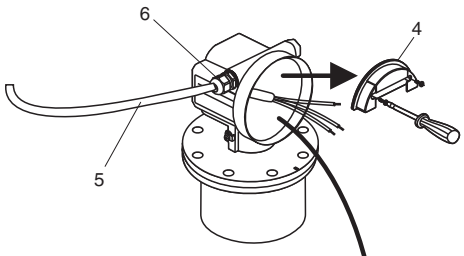

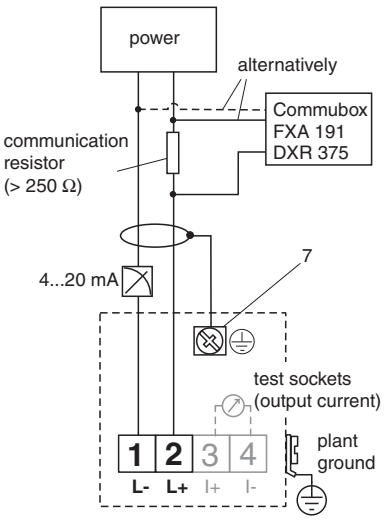

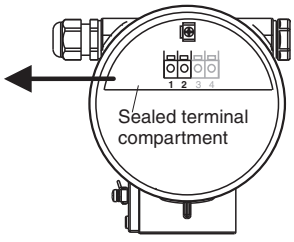

L00-FMR2xxxx-04-00-00-en-013

Wiring in T12 housing

Caution!

Before connection please note the following:

- The power supply must be identical to the data on the nameplate (1).
- Switch off power supply before connecting up the device.
- Connect Equipotential bonding to transmitter ground terminal before connecting up the device.
- Tighten the locking screw:
  It forms the connection between the antenna and the housing ground potential.

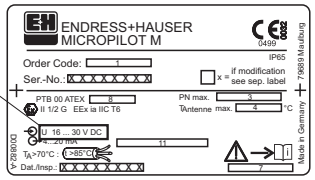

1

When you use the measuring system in hazardous areas, make sure you comply with national standards and the specifications in the safety instructions (XA's).
Make sure you use the specific cable gland.

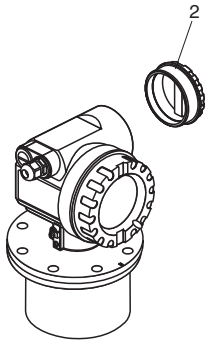

Connect up the Micropilot M as follows:

EX

Before unscrew housing cover (2) at seperate connection room turn off the power supply!

- Insert cable (3) through gland (4).
  A standard installation cable is sufficient if only the analogue signal is used. Use a screened cable when working with a superimposed communications signal (HART).

EX

Only ground screening of the line (5) on sensor side.

- Make connection (see pin assignment).
- Tighten cable gland (4).
- Screw on housing cover (2).
- Switch on power supply.

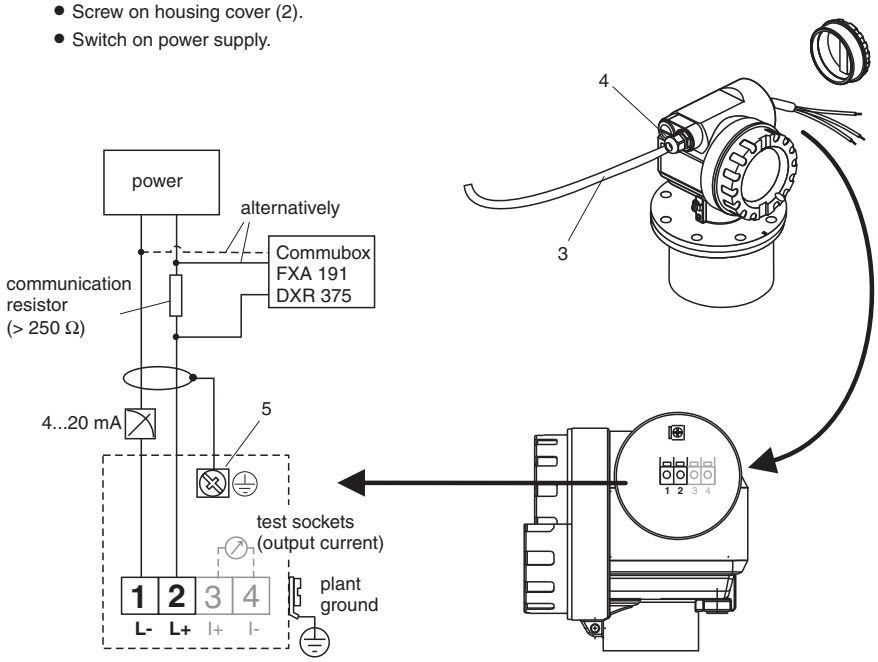

L00-FMR2xxxx-04-00-00-en-014

4.2 Connecting the measuring unit

Terminal compartment

Three housings are available:
- Aluminium housing F12 with additionally sealed terminal compartment for:
  – standard,
  – EEx ia,
  – EEx ia with dust Ex.
- Aluminium housing T12 with separate terminal compartment for:
  – standard,
  – EEx d,
  – EEx ia (with overvoltage protection),
  – dust Ex.
- 316L housing F23 for:
  – standard,
  – EEx ia,
  – EEx ia with dust Ex.

The electronics and current output are galvanically isolated from the antenna circuit.

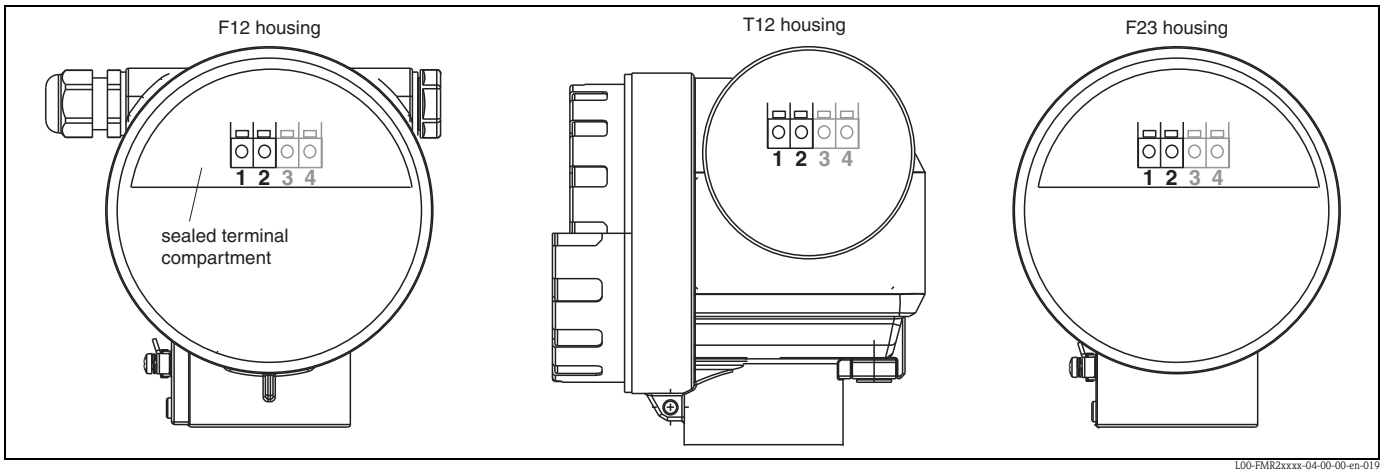

The instrument data are given on the nameplate together with important information regarding the analog output and voltage supply. Housing orientation regarding the wiring, (→ Page 28).

Load HART

Minimum load for Hart communication: 250 Ω

Cable entry

Cable gland: M20x1.5
Cable entry: G ½ or ½ NPT

Supply voltage

The following values are the voltages across the terminals directly at the instrument:

Communication		Current consumption	Terminal voltage	
			minimal	maximal
HART	standard	4 mA	16 V	36 V
		20 mA	7.5 V	36 V
	EEx ia	4 mA	16 V	30 V
		20 mA	7.5 V	30 V
	EEx d	4 mA	16 V	30 V
		20 mA	11 V	30 V
	dust Ex	4 mA	16 V	30 V
		20 mA	11 V	30 V
Fixed current, adjustable e.g. for solar power operation (measured value transferred at HART)	standard	11 mA	10 V	36 V
	EEx ia	11 mA	10 V	30 V
Fixed current for HART Multidrop mode	standard	4 mA[1)]	16 V	36 V
	EEx ia	4 mA[1)]	16 V	30 V

1) Start up current 11 mA.

Power consumption

Normal operation: min. 60 mW, max. 900 mW

Current consumption

Communication	Current consumption
HART	3.6...22 mA

4.2.1 HART connection with E+H RMA422 / RN221N

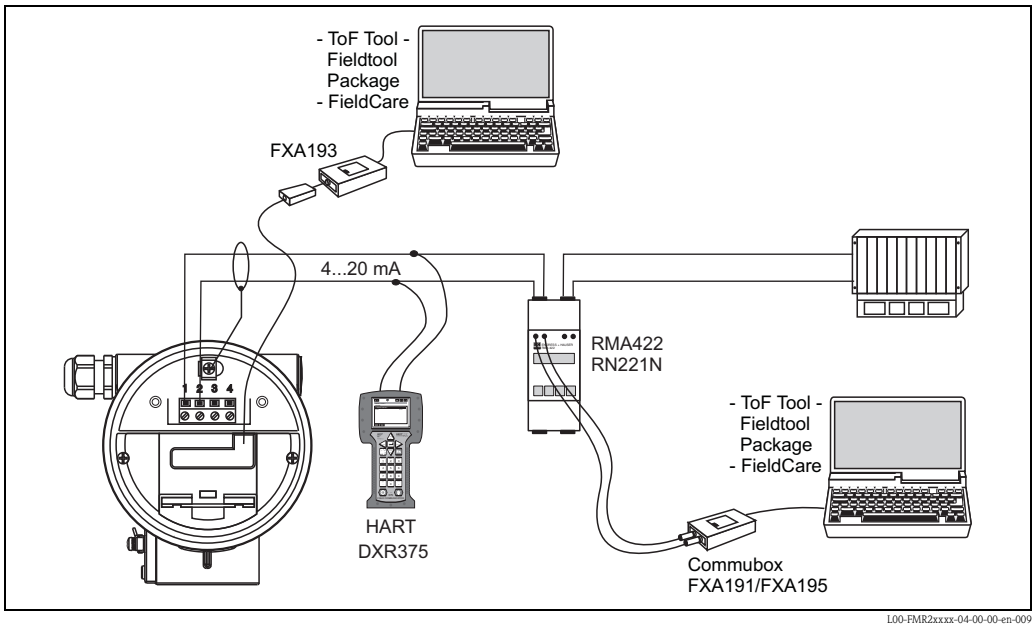

4.2.2 HART connection with other supplies

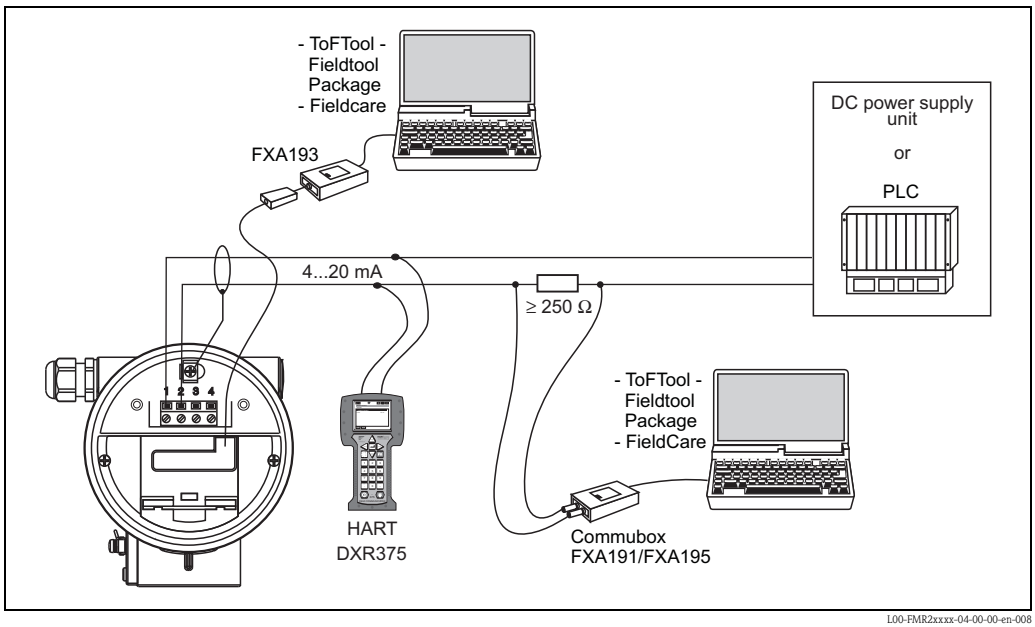

Caution!
If the HART communication resistor is not built into the supply unit, it is necessary to insert a communication resistor of 250 Ω into the 2-wire line.

4.3 Recommended connection

4.3.1 Equipotential bonding

Connect the equipotential bonding to the external ground terminal of the transmitter.

4.3.2 Wiring screened cable



Caution!
In Ex applications, the screen must only be grounded on the sensor side. Further safety instructions are given in the separate documentation for applications in explosion hazardous areas.

4.4 Degree of protection

- with closed housing: IP65, NEMA4X
- with open housing: IP20, NEMA1 (also ingress protection of the display)
- antenna: IP68 (NEMA6P)

4.5 Post-connection check

After wiring the measuring instrument, perform the following checks:
- Is the terminal allocation correct (→ Page 29 and Page 30)?
- Is the cable gland tight?
- Is the housing cover screwed tight?
- If auxiliary power is available:
  Is the instrument ready for operation and does the liquid crystal display show any value?

5 Operation

5.1 Quick operation guide

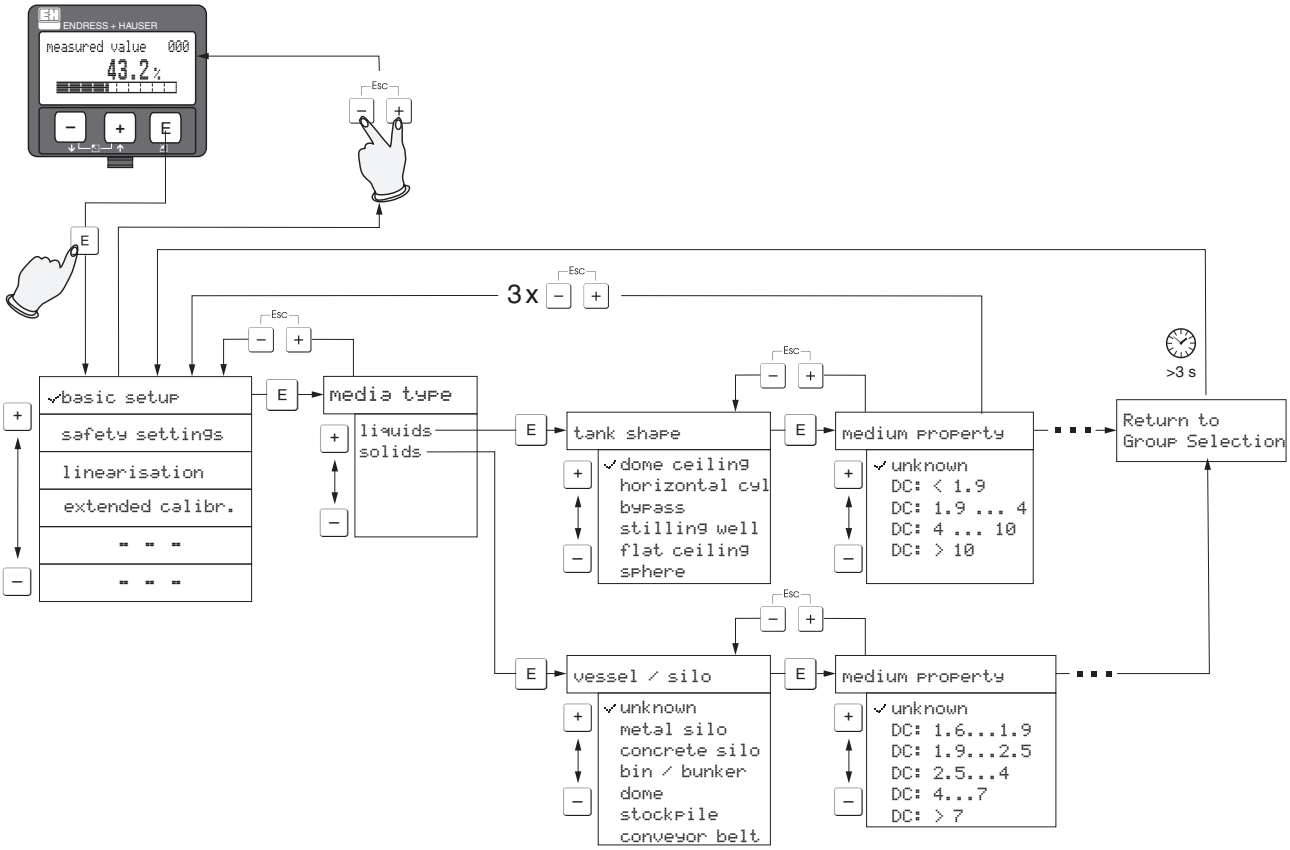

Example - Selection and configuration in Operation menu:

1.) Change from Measured Value Display to **Group Selection** by pressing E

2.) Press − or + to select the required **Function Group** (e.g.. "basic setup (00)") and confirm by pressing E ➜ First f**unction** (e.g. "tank shape (002)") is selected.

Note!
The active selection is marked by a ⋰ in front of the menu text.

3.) Activate Edit mode with + or −.

Selection menus:

a) Select the required **Parameter** in selected **function** (e.g. "tank shape (002)") with − or +.
b) E confirms selection ➜ ⋰ appears in front of the selected parameter
c) E confirms the edited value ➜ system quits Edit mode
d) + + − (= Esc) interrupts selection ➜ system quits Edit mode

Typing in numerals and text:

a) Press + or − to edit the first character of the **numeral / text** (e.g. "empty calibr. (005)")
b) E positions the cursor at the next character ➜ continue with (a) until you have completed your input
c) if a ↵ symbol appears at the cursor, press E to accept the value entered ➜ system quits Edit mode
d) + + − (= Esc) interrupts the input, system quits Edit mode

4) Press E to select the next **function** (e.g. "medium property (003)")

5) Press + + − (= Esc) once ➜ return to previous **function** (e.g. "tank shape (002)")
Press + + − (= Esc) twice ➜ return to **Group selection**

6) Press + + − (= Esc) to return to **Measured value display**

L00-FMR250xx-19-00-00-en-002

5.1.1 General structure of the operating menu

The operating menu is made up of two levels:

- **Function groups (00, 01, 03, ..., 0C, 0D):** The individual operating options of the instrument are split up roughly into different function groups. The function groups that are available include, e.g.: "**basic setup**", "**safety settings**", "**output**", "**display**", etc.
- **Functions (001, 002, 003, ..., 0D8, 0D9):** Each function group consists of one or more functions. The functions perform the actual operation or parameterisation of the instrument. Numerical values can be entered here and parameters can be selected and saved. The available functions of the "**basic setup**" **(00)** function group include, e.g.: "**tank shape**" **(002)**, "**medium property**" **(003)**, "**process cond.**" **(004)**, "**empty calibr.**" **(005)**, etc.

If, for example, the application of the instrument is to be changed, carry out the following procedure:

1. Select the "**basic setup**" **(00)** function group.
2. Select the "**tank shape**" **(002)** function (where the existing tank shape is selected).

5.1.2 Identifying the functions

For simple orientation within the function menus (QUERVERWEIS), for each function a position is shown on the display.

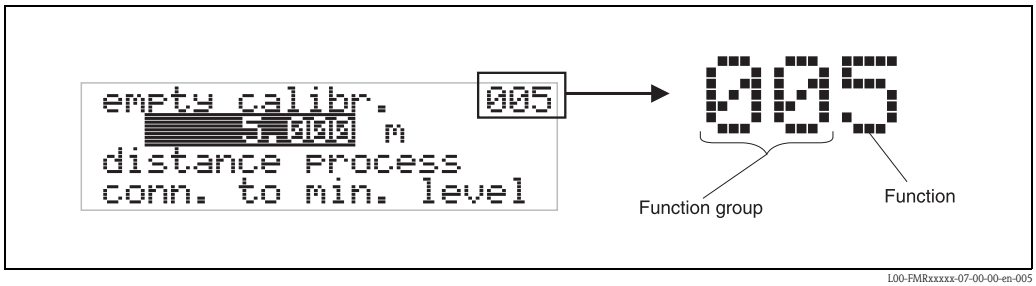

L00-FMRxxxxx-07-00-00-en-005

The first two digits identify the function group:

- **basic setup** **00**
- **safety settings** **01**
- **linearisation** **04**

. . .

The third digit numbers the individual functions within the function group:

- **basic setup** **00** →
  - **tank shape** **002**
  - **medium property** **003**
  - **process cond.** **004**

  . . .

Hereafter the position is always given in brackets (e.g. "**tank shape**" **(002)**) after the described function.

5.2 Display and operating elements

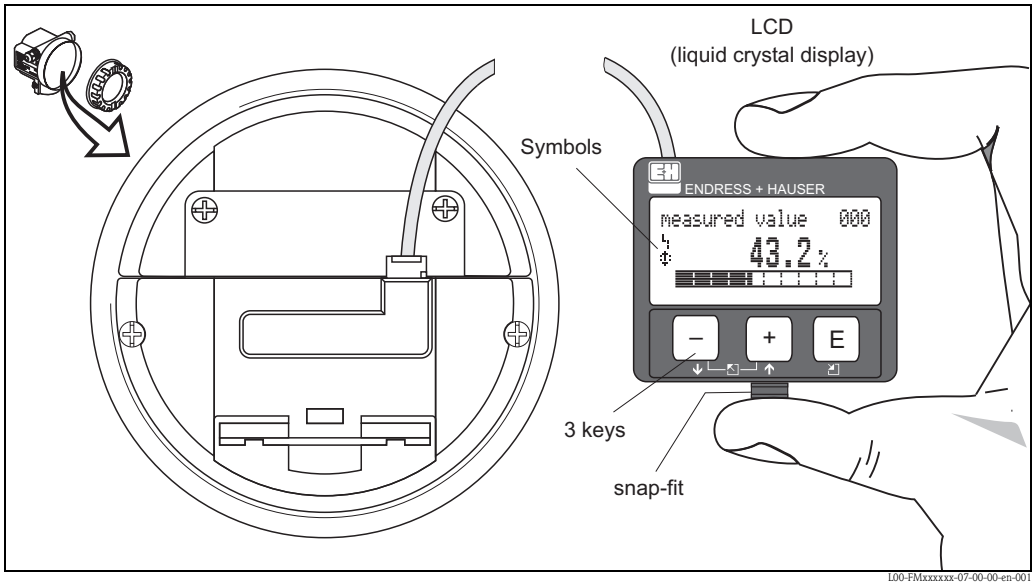

Fig. 2: Layout of the display and operating elements

The VU331 LCD display can be removed to ease operation by simply pressing the snap-fit (see graphic above). It is connected to the device by means of a 500 mm cable.

Note!
To access the display the cover of the electronic compartment may be removed even in hazardous area (IS and XP).

5.2.1 Display

Liquid crystal display (LCD):

Four lines with 20 characters each. Display contrast adjustable through key combination.

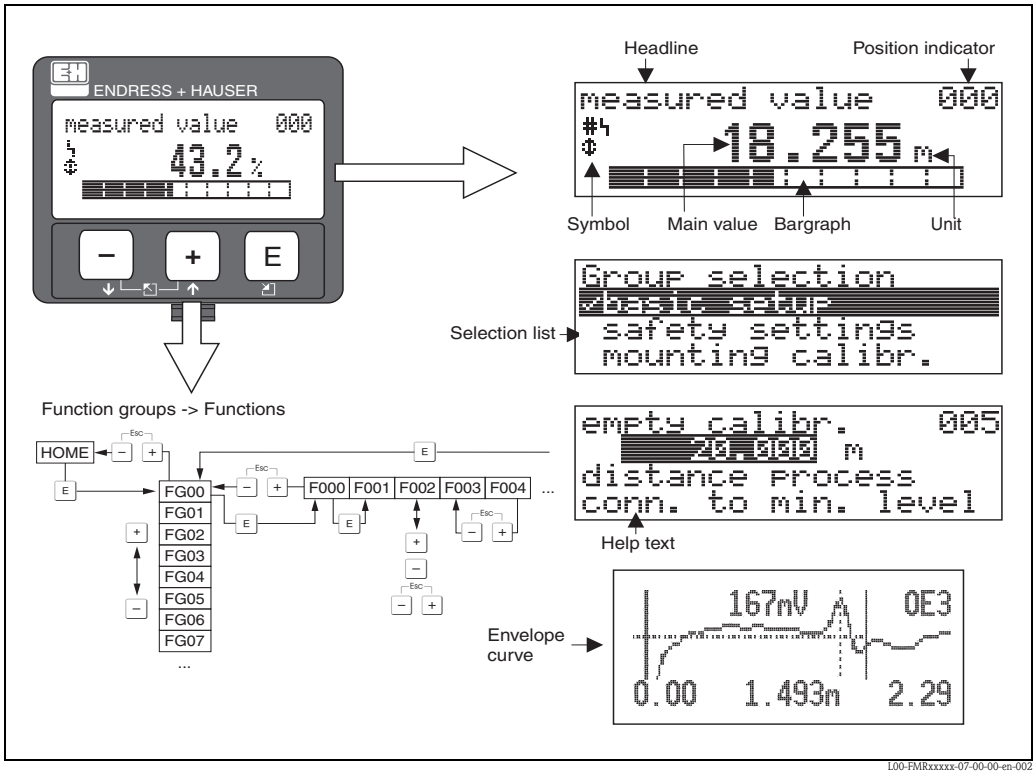

Fig. 3: Display

5.2.2 Display symbols

The following table describes the symbols that appear on the liquid crystal display:

Sybmol	Meaning
	**ALARM_SYMBOL** This alarm symbol appears when the instrument is in an alarm state. If the symbol flashes, this indicates a warning.
	**LOCK_SYMBOL** This lock symbol appears when the instrument is locked,i.e. if no input is possible.
	**COM_SYMBOL** This communication symbol appears when a data transmission via e.g. HART, PROFIBUS PA or FOUNDATION Fieldbus is in progress.

5.2.3 Key assignment

The operating elements are located inside the housing and are accessible for operation by opening the lid of the housing.

Function of the keys

Key(s)	Meaning
+ or ↑	Navigate upwards in the selection list Edit numeric value within a function
− or ↓	Navigate downwards in the selection list Edit numeric value within a function
Esc − + or ←	Navigate to the left within a function group
E	Navigate to the right within a function group, confirmation.
+ and E or − and E	Contrast settings of the LCD
+ and − and E	Hardware lock / unlock After a hardware lock, an operation of the instrument via display or communication is not possible! The hardware can only be unlocked via the display. An unlock parameter must be entered to do so.

5.3 Local operation

5.3.1 Locking of the configuration mode

The Micropilot can be protected in two ways against unauthorised changing of instrument data, numerical values or factory settings:

"unlock parameter" (0A4):

A value **<> 100** (e.g. 99) must be entered in "**unlock parameter**" **(0A4)** in the "**diagnostics**" **(0A)** function group. The lock is shown on the display by the symbol and can be released again either via the display or by communication.

Hardware lock:

The instrument is locked by pressing the [+] and [−] and [E] keys at the same time.
The lock is shown on the display by the symbol and can **only** be unlocked again via the display by pressing the [+] and [−] and [E] keys at the same time again. It is **not** possible to unlock the hardware by communication. All parameters can de displayed even if the instrument is locked.

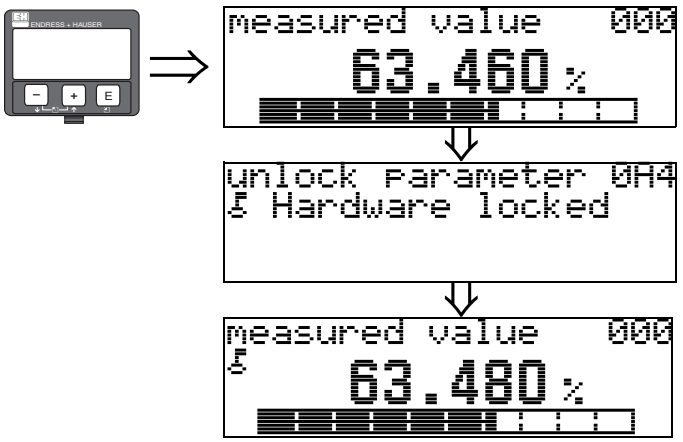

[+] and [−] and [E] press simultaneous

The LOCK_SYMBOL appears on the LCD.

5.3.2 Unlocking of configuration mode

If an attempt is made to change parameters on display when the instrument is locked, the user is automatically requested to unlock the instrument:

unlock parameter" (0A4):

By entering the unlock parameter (on the display or via communication)

100 = for HART devices

the Micropilot is released for operation.

Hardware unlock:

After pressing the [+] and [−] and [E] keys at the same time, the user is asked to enter the unlock parameter

100 = for HART devices.

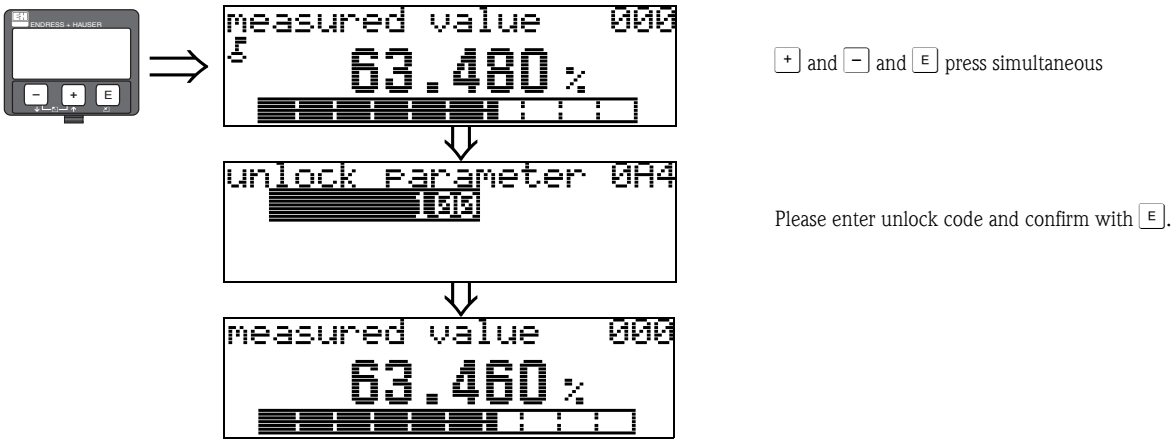

Caution!
Changing certain parameters such as all sensor characteristics, for example, influences numerous functions of the entire measuring system, particularly measuring accuracy. There is no need to change these parameters under normal circumstances and consequently, they are protected by a special code known only to the E+H service organization. Please contact Endress+Hauser if you have any questions.

5.3.3 Factory settings (Reset)

Caution!
A reset sets the instrument back to the factory settings. This can lead to an impairment of the measurement. Generally, you should perform a basic setup again following a reset.

A reset is only necessary:
- if the instrument no longer functions
- if the instrument must be moved from one measuring point to another
- if the instrument is being de-installed /put into storage/installed





User input ("reset" (0A3)):
- 333 = customer parameters

333 = reset customer parameters
This reset is recommended whenever an instrument with an unknown 'history' is to be used in an application:
- The Micropilot is reset to the default values.
- The customer specific tank map is not deleted.
- A linearisation is switched to "**linear**" although the table values are retained. The table can be reactivated in the "**linearisation**" **(04)** function group.

List of functions that are affected by a reset:
- tank shape (002) – liquids only
- vessel / silo (00A) – solids only
- empty calibr. (005)
- full calibr. (006)
- pipe diameter (007) – liquids only
- output on alarm (010)
- output on alarm (011)
- outp. echo loss (012)
- ramp %span/min (013)
- delay time (014)
- safety distance (015)
- in safety dist. (016)
- level/ullage (040)
- linearisation (041)
- customer unit (042)
- diameter vessel (047)
- range of mapping (052)
- pres. Map dist (054)
- offset (057)
- low output limit (062)
- fixed current (063)
- fixed cur. value (064)
- simulation (065)
- simulation value (066)
- 4mA value (068)
- 20mA value (069)
- format display (094)
- distance unit (0C5)
- download mode (0C8)

The tank map can also be reset in the "**mapping**" **(055)** function of the "**extended calibr.**" **(05)** function group.

This reset is recommended whenever an instrument with an unknown 'history' is to be used in an application or if a faulty mapping was started:
- The tank map is deleted. The mapping must be recommenced.

5.4 Display and acknowledging error messages

Type of error

Errors that occur during commissioning or measuring are displayed immediately on the local display. If two or more system or process errors occur, the error with the highest priority is the one shown on the display.

The measuring system distinguishes between two types of error:

- **A (Alarm):**
  Instrument goes into a defined state (e.g. MAX 22 mA)
  Indicated by a constant symbol.
  (For a description of the codes, see Page 74)
- **W (Warning):**
  Instrument continue measuring, error message is displayed.
  Indicated by a flashing symbol.
  (For a description of the codes, see Page 74)
- **E (Alarm / Warning):**
  Configurable (e.g. loss of echo, level within the safety distance)
  Indicated by a constant/flashing symbol.
  (For a description of the codes, see Page 74)



5.4.1 Error messages

Error messages appear as four lines of plain text on the display. In addition, a unique error code is also output. A description of the error codes is given on Page 74.

- The "**diagnostics**" **(0A)** function group can display current errors as well as the last errors that occurred.
- If several current errors occur, use + or − to page through the error messages.
- The last occurring error can be deleted in the "**diagnostics**" **(0A)** function group with the funktion"**clear last error**" **(0A2)**.

5.5 HART communication

Apart from local operation, you can also parameterise the measuring instrument and view measured values by means of a HART protocol. There are two options available for operation:
- Operation via the universal handheld operating unit, the HART Communicator DXR375.
- Operation via the Personal Computer (PC) using the operating program (e.g. ToF Tool or Commuwin II) (For connections, see Page 33).

Note!
The Micropilot M can also be operated locally using the keys. If operation is prevented by the keys being locked locally, parameter entry via communication is not possible either.

5.5.1 Handheld unit Field Communicator DXR375

All device functions can be adjusted via menu operation with the handheld unit DXR375.

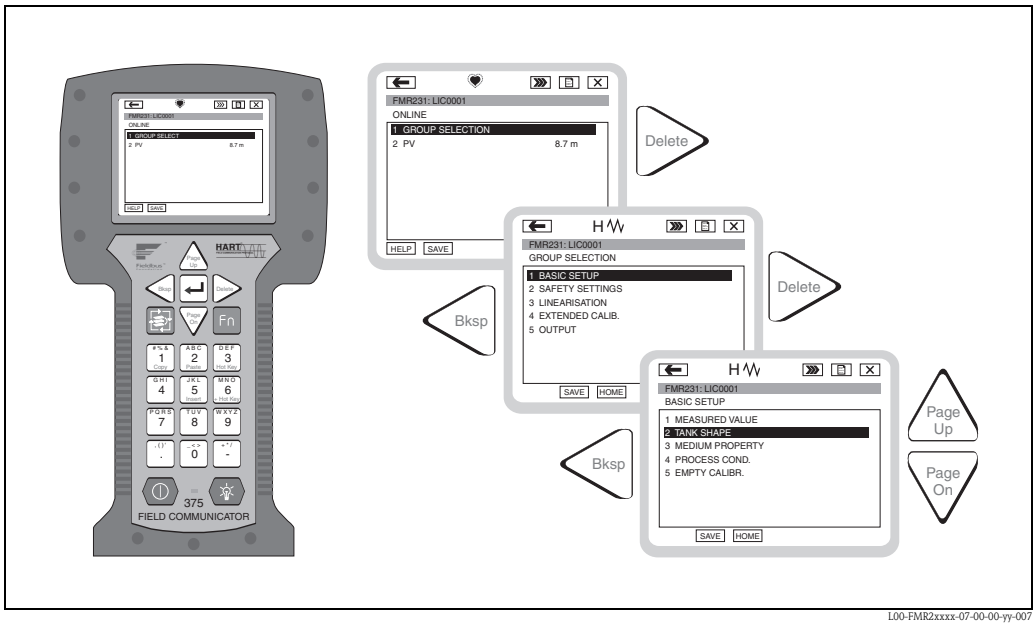

Abb. 4: Menu operation with the DXR375 handheld instrument

Note!
- Further information on the HART handheld unit is given in the respective operating manual included in the transport bag of the instrument.

5.5.2 Endress+Hauser operating program

ToF Tool – Fieldtool Package

The ToF Tool is a graphic and menu-guided operating program for measuring devices from Endress+Hauser. It is used for the commissioning, data storage, signal analysis and documentation of the devices. The following operating systems are supported: WinNT4.0, Win2000 and Windows XP. You can set all parameters via the ToF Tool.

The ToF Tool supports the following functions:
- Configuration of transmitters in online operation
- Singal analysis via envelope curve
- Tank linearisation
- Loading and saving device data (upload/download)
- Documentation of the measuring point

Connection options:
- HART via Commubox FXA191 and the RS 232 C serial interface of a computer

- HART via Commubox FXA195 and the USB port on a computer
- PROFIBUS PA via segment coupler and PROFIBUS interface card
- FOUNDATION Fieldbus, PROFIBUS PA and HART via the FXA193/FXA291 service interface

Note!
You can use the ToF Tool to configure the Endress+Hauser parameters for devices with "FOUNDATION Fieldbus signal". You need an FF configuration program to be able to configure all the FF-specific parameters and to integrate the device into an FF network.

FieldCare

FieldCare is an Endress+Hauser asset management tool based on FDT technology. With FieldCare, you can configure all Endress+Hauser devices as well as devices from other manufacturers that support the FDT standard. The following operating systems are supported: WinNT4.0, Win2000 and Windows XP.

FieldCare supports the following functions:
- Configuration of transmitters in online operation
- Singal analysis via envelope curve
- Tank linearisation
- Loading and saving device data (upload/download)
- Documentation of the measuring point

Connection options:
- HART via Commubox FXA191 and the RS 232 C serial interface of a computer
- HART via Commubox FXA195 and the USB port on a computer
- PROFIBUS PA via segment coupler and PROFIBUS interface card

Menu-guided commissioning

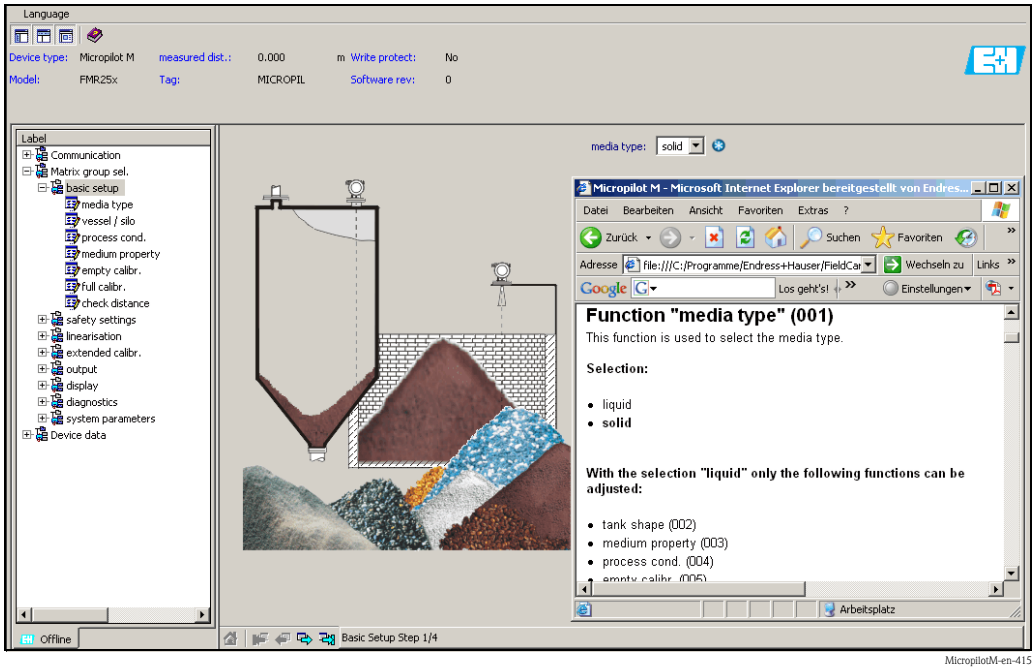

MicropilotM-en-415

Signal analysis via envelope curve

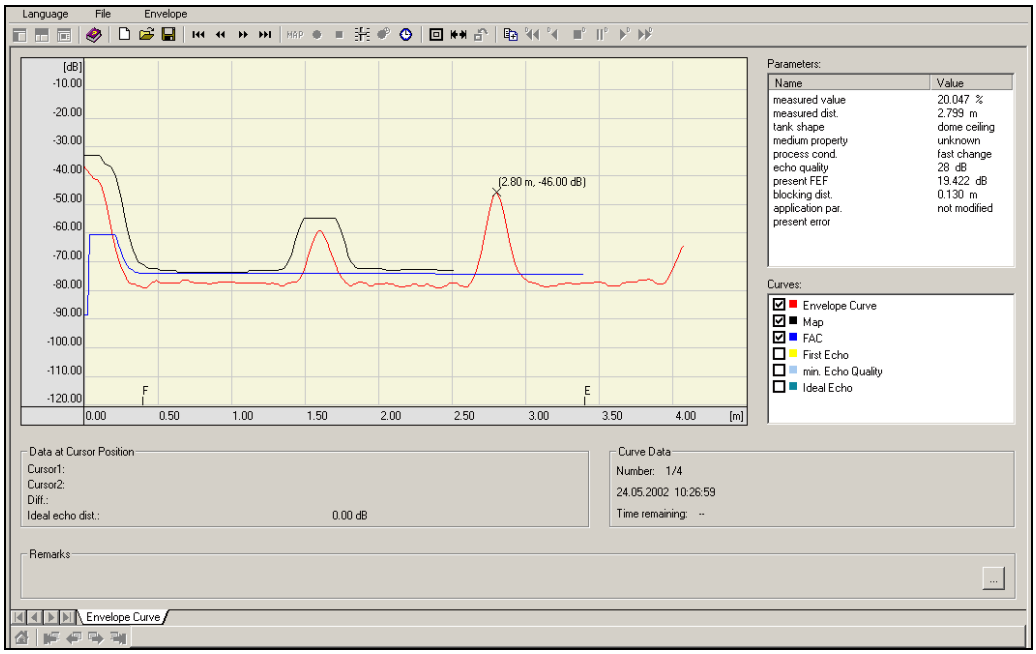

MicropilotM-en-306

Tank linearisation

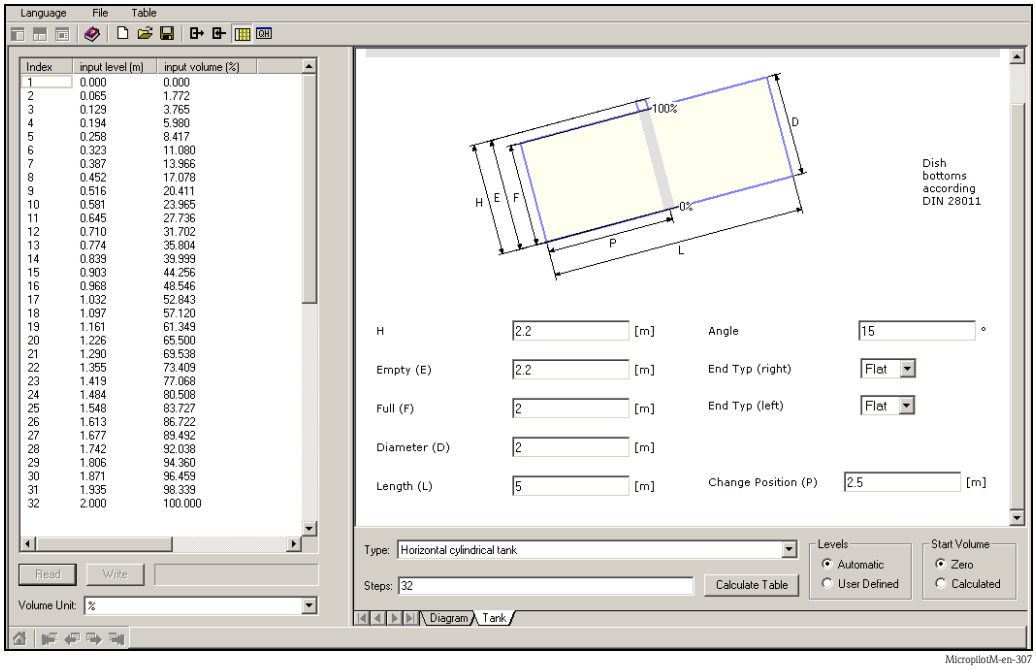

MicropilotM-en-307

6 Commissioning

6.1 Function check

Make sure that all final checks have been completed before you start up your measuring point:
- Checklist “Post installation check” (see Page 28).
- Checklist “Post connection check” (see Page 34).

6.2 Switching on the measuring device

When the instrument is switched on for the first time, the following messages appear on the display:

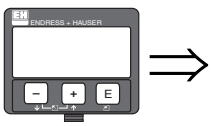

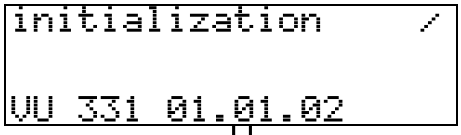

After 5 s, the following message appears

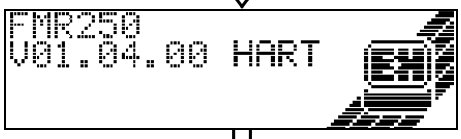

After 5 s, the following message appears(e.g. for HART devices)



After 5 s or after you have pressed [E] the following message appears

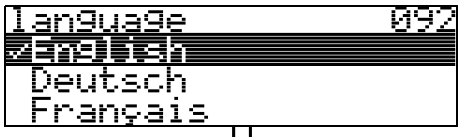

Select the language (this message appears the first time the instrument is switched on)

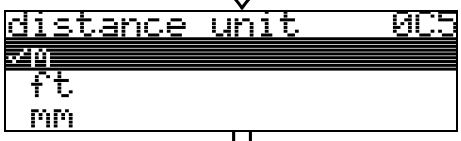

Select the basic unit (this message appears the first time the instrument is switched on)

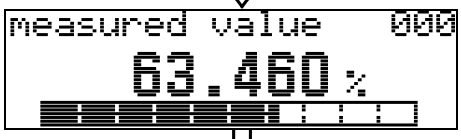

The current measured value is displayed

After [E] is pressed, you reach the group selection.

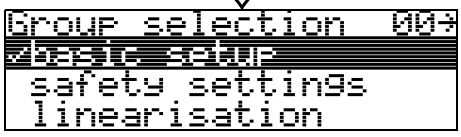

This selection enables you to perform the basic setup

6.3 Basic Setup

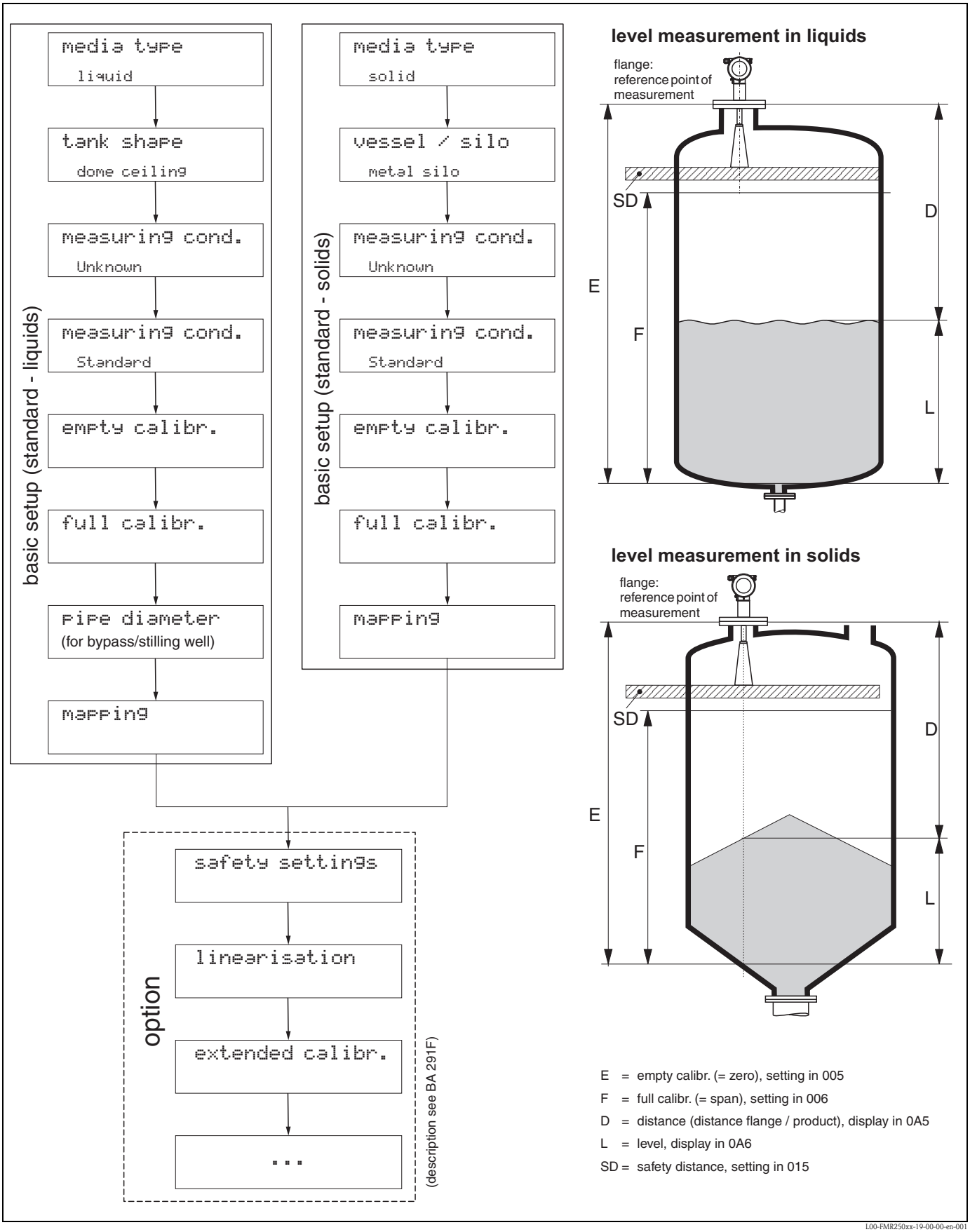

The basic setup is sufficient for successful commissioning in most applications. Complex measuring operations necessitate additional functions that the user can use to customise the Micropilot as necessary to suit his specific requirements. The functions available to do this are described in detail in the BA291F.

Comply with the following instructions when configuring the functions in the "**basic setup**" **(00)**:
- Select the functions as described on Page 35.
- Some functions can only be used depending on the parameterisation of the instrument. For example, the pipe diameter of a stilling well can only be entered if "**stilling well**" was selected beforehand in the "**tank shape**" **(002)** function.
- Certain functions (e.g. starting an interference echo mapping (053)) prompt you to confirm your data entries. Press [+] or [–] to select "**YES**" and press [E] to confirm. The function is now started.
- If you do not press a key during a configurable time period (→ function group "**display**" **(09)**), an automatic return is made to the home position (measured value display).



Note!
- The instrument continues to measure while data entry is in progress, i.e. the current measured values are output via the signal outputs in the normal way.
- If the envelope curve mode is active on the display, the measured values are updated in a slower cycle time. Thus, it is advisable to leave the envelope curve mode after the measuring point has been optimised.
- If the power supply fails, all preset and parameterised values remain safely stored in the EEPROM.



Caution!
All functions are described in detail, as is the overview of the operating menu itself, in the manual "**Description of the instrument functions – BA291F**", which is found on the enclosed CD-ROM.



Note!
The default values of the parameters are typed in **boldface**.

6.4 Basic Setup with the VU331

Function "measured value" (000)



This function displays the current measured value in the selected unit (see "**customer unit**" **(042)** function). The number of digits after decimal point can be selected in the "**no.of decimals**" **(095)** function.

6.4.1 Function group "basic setup" (00)



Function "media type" (001)



This function is used to select the media type.

Selection:
- liquid
- **solid**

With the selection "liquid" only the following functions can be adjusted:

■ tank shape	002
■ medium property	003
■ process cond.	004
■ empty calibr.	005
■ full calibr.	006
■ pipe diameter	007
■ check distance	051
■ range of mapping	052
■ start mapping	053
■ . . .	

With the selection "solids" only the following functions can be adjusted:

■ vessel / silo	00A
■ medium property	00B
■ process cond.	00C
■ empty calibr.	005
■ full calibr.	006
■ check distance	051
■ range of mapping	052
■ start mapping	053
■ . . .	

Function "tank shape" (002), liquids only

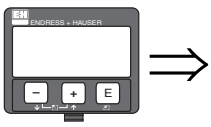



This function is used to select the tank shape.

Selection:
- **dome ceiling**
- horizontal cyl
- bypass
- stilling well
- flat ceiling
- sphere

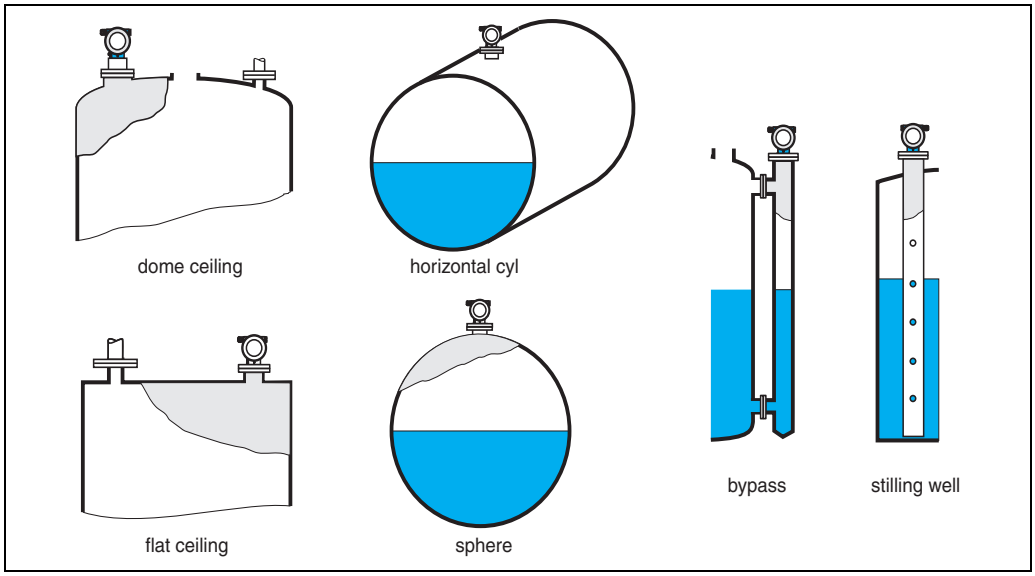

L00-FMR2xxxx-14-00-06-en-007

Function "medium property" (003), liquids only

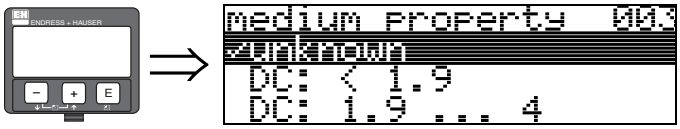

This function is used to select the dielectric constant.

Selection:
- **unknown**
- DC: < 1.9
- DC: 1.9 ... 4
- DC: 4 ... 10
- DC: > 10

Product class	DC (εr)	Examples
A	1,4...1,9	non-conducting liquids, e.g. liquefied gas [1]
B	1,9...4	non-conducting liquids, e.g. benzene, oil, toluene, …
C	4...10	e.g. concentrated acids, organic solvents, esters, aniline, alcohol, acetone, …
D	>10	conducting liquids, e.g. aqueous solutions, dilute acids and alkalis

1) Treat Ammonia NH3 as a medium of group A, i.e. use FMR 230 in a stilling well.

Function "process cond." (004) , liquids only

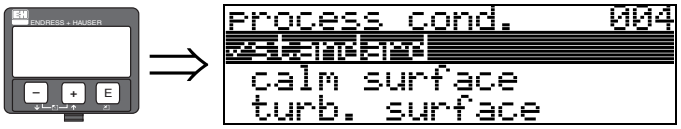

This function is used to select the process conditions.

Selection:
- **standard**
- calm surface
- turb. surface
- agitator
- fast change
- test:no filter

standard	calm surface	turb. surface
For all applications that do not fit into any of the following groups.	Storage tanks with immersion tube or bottom filling	Storage / buffer tanks with rough surface due to free filling or mixer nozzles
	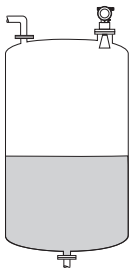	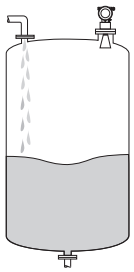
The filter and output damping are set to average values.	The averaging filters and output damping are set to high values. → steady meas. value → precise measurement → slower reaction time	Special filters to smooth the input signals are emphasised. → smoothed meas. value → medium fast reaction time

agitator	fast change	test:no filter
Agitated surfaces (with possible vortex) due to agitators	Rapid change of level, particularly in small tanks	All filters can be switched off for service / diagnostic purposes.
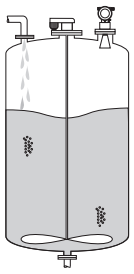	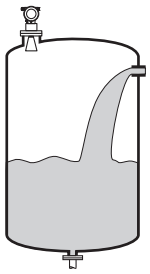	
Special filters to smooth the input signals are set to high values. → smoothed meas. value → medium fast reaction time → minimization of effects by agitator blades	The averaging filters are set to low values. The output damping is set to 0. → rapid reaction time → possibly unsteady meas. value	All filters off.

Function "vessel / silo" (00A), solids only



This function is used to select the vessel / silo.

Selection:
- **unknown**
- metal silo
- concrete silo
- bin / bunker
- dome
- stockpile
- conveyor belt

Function "medium property" (00B), solids only

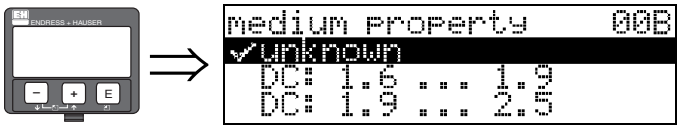

This function is used to select the dielectric constant.

Selection:
- **unknown**
- DC: 1.6 ... 1.9
- DC: 1.9 ... 2.5
- DC: 2.5 ... 4
- DC: 4 ... 7
- DC: > 7

Media group	DK (Εr)	Examples
A	1.6...1.9	– Plastic granulate – White lime, special cement – Sugar
B	1.9...2.5	– Portland cement, plaster
C	2.5...4	– Grain, seeds – Ground stones – Sand
D	4...7	– Naturally moist (ground) stones, ores – Salt
E	> 7	– Metallic powder – Carbon black – Coal

The respective lower group applies for very loose or loosened bulk solids.

Function "process cond." (00C), solids only



This function is used to select the process conditions.

Selection:
- **standard**
- fast change
- slow change
- test:no filter

Function "empty calibr." (005)

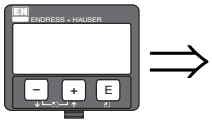



This function is used to enter the distance from the flange (reference point of the measurement) to the minimum level (=zero).

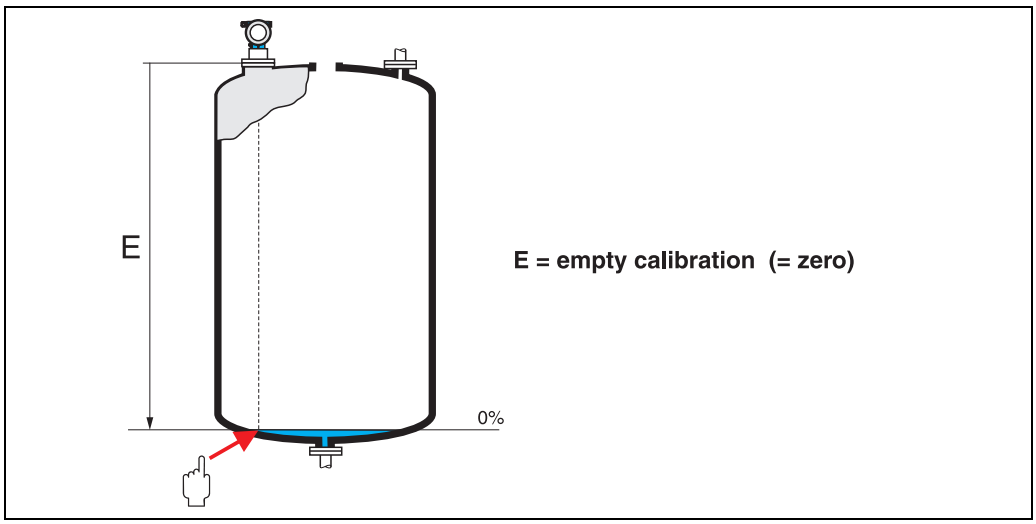

Caution!
For dish bottoms or conical outlets, the zero point should be no lower than the point at which the radar beam hits the bottom of the vessel.

Function "full calibr." (006)



This function is used to enter the distance from the minimum level to the maximum level (=span).

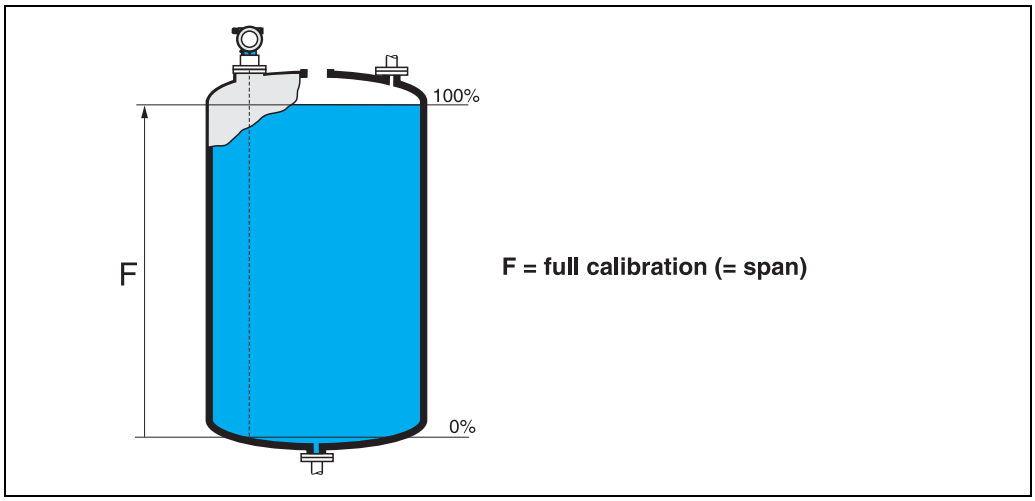

In principle, it is possible to measure up to the tip of the antenna. However, due to considerations regarding corrosion and build-up, the end of the measuring range should not be chosen any closer than 50 mm (2") to the tip of the antenna.

Note!
If **bypass** or **stilling well** was selected in the "**tank shape**" **(002)** function, the pipe diameter is requested in the following step.

Function "pipe diameter" (007)

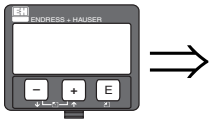



This function is used to enter the pipe diameter of the stilling well or bypass pipe.

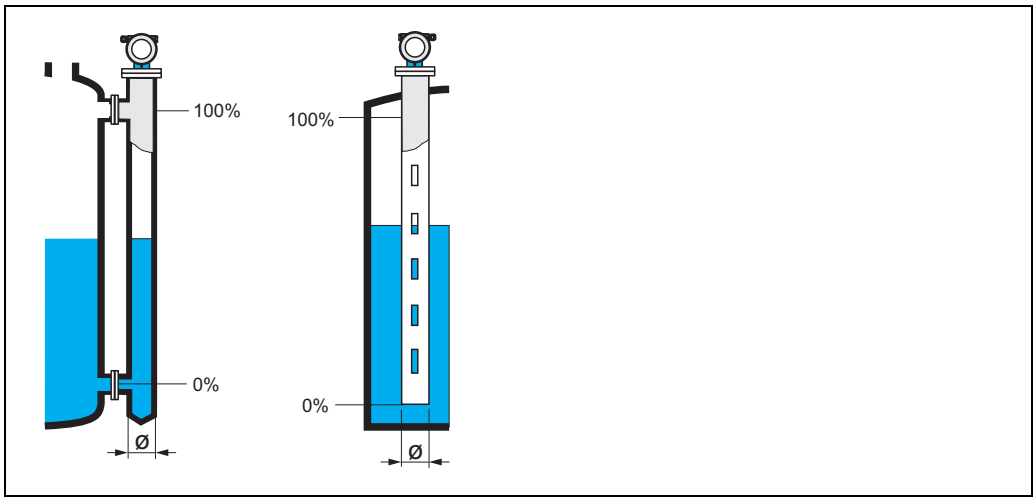

L00-FMR2xxxx-14-00-00-en-011

Microwaves propagate more slowly in pipes than in free space. This effect depends on the inside diameter of the pipe and is automatically taken into account by the Micropilot. It is only necessary to enter the pipe diameter for applications in a bypass or stilling well.

display (008)

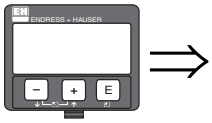

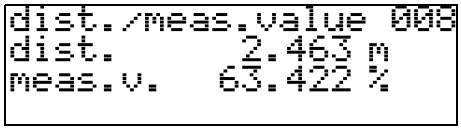

The **distance** measured from the reference point to the product surface and the **level** calculated with the aid of the empty adjustment are displayed. Check whether the values correspond to the actual level or the actual distance. The following cases can occur:

- Distance correct – level correct → continue with the next function, "**check distance**" **(051)**
- Distance correct – level incorrect → Check "**empty calibr.**" **(005)**
- Distance incorrect – level incorrect → continue with the next function, "**check distance**" **(051)**

Function "check distance" (051)

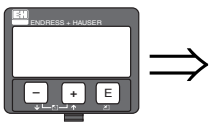

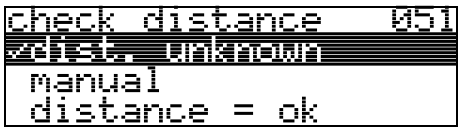

This function triggers the mapping of interference echoes. To do so, the measured distance must be compared with the actual distance to the product surface. The following options are available for selection:

Selection:
- distance = ok
- dist. too small
- dist. too big
- **dist. unknown**
- manual

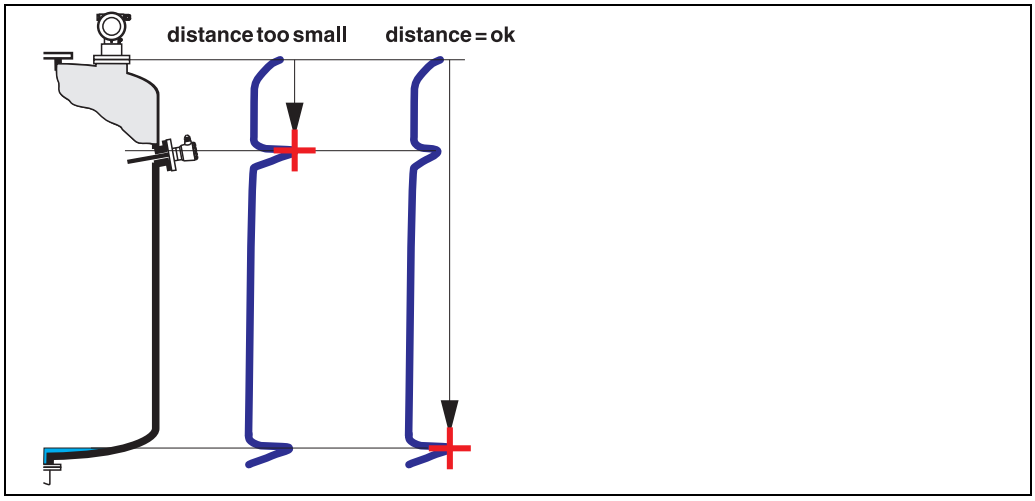

distance = ok
- mapping is carried out up to the currently measured echo
- The range to be suppressed is suggested in the "**range of mapping**" **(052)** function

Anyway, it is wise to carry out a mapping even in this case.

dist. too small
- At the moment, an interference is being evaluated
- Therefore, a mapping is carried out including the presently measured echoes
- The range to be suppressed is suggested in the "**range of mapping**" **(052)** function

dist. too big
- This error cannot be remedied by interference echo mapping
- Check the application parameters **(002), (003), (004)** and "**empty calibr.**" **(005)**

dist. unknown
If the actual distance is not known, no mapping can be carried out.

manual
A mapping is also possible by manual entry of the range to be suppressed. This entry is made in the "**range of mapping**" **(052)** function.



Caution!
The range of mapping must end 0.5 m (20") before the echo of the actual level. For an empty vessel, do not enter E, but E – 0.5 m (20").
If a mapping already exists, it is overwriten up to the distance specified in "**range of mapping**" **(052)**. Beyond this value the existing mapping remains unchanged.

Function "range of mapping" (052)

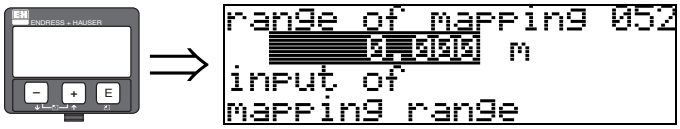

This function displays the suggested range of mapping. The reference point is always the reference point of the measurement (see Page 48 ff.). This value can be edited by the operator.
For manual mapping, the default value is 0 m.

Function "start mapping" (053)



This function is used to start the interference echo mapping up to the distance given in "**range of mapping**" **(052)**.

Selection:
- off → no mapping is carried out
- on → mapping is started

During the mapping process the message "**record mapping**" is displayed.

Caution!
A mapping will be recorded only, if the device is not in alarm-state.

display (008)

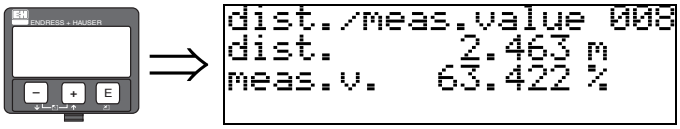

The **distance** measured from the reference point to the product surface and the **level** calculated with the aid of the empty adjustment are displayed. Check whether the values correspond to the actual level or the actual distance. The following cases can occur:

- Distance correct – level correct → continue with the next function, "**check distance**" **(051)**
- Distance correct – level incorrect → Check "**empty calibr.**" **(005)**
- Distance incorrect – level incorrect → continue with the next function, "**check distance**" **(051)**

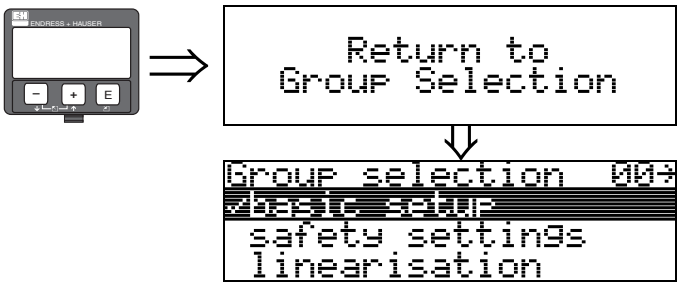

After 3 s, the following message appears

6.4.2 Envelope curve with VU331

After the basic setup, an evaluation of the measurement with the aid of the envelope curve ("**envelope curve**" **(0E)** function group) is recommended.

Function "plot settings" (0E1)

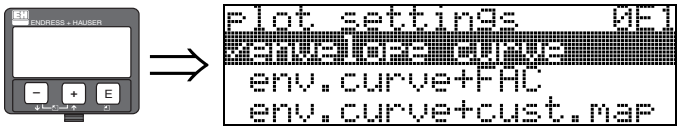

Select which information will be displayed in the LCD:
- **envelope curve**
- env.curve+FAC (on FAC see BA291F)
- env.curve+cust.map (i.e. customer tank map is also displayed)

Function "recording curve" (0E2)

This function defines whether the envelope curve is read as a
- **single curve**
  or
- cyclic.

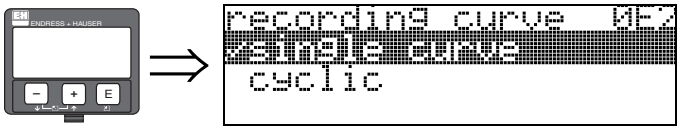

Note!
If the cyclical envelope curve is active in the display, the measured value is refreshed in a slower cycle time. It is therefore recommended to exit the envelope curve display after optimising the measuring point.

Note!
An **orientation** of the Micropilot can help to optimise measurement in applications with very weak level echos or strong interference echos by increasing the useful echo/reducing the interference echo (see "Orientation of the Micropilot" on Page 80).
When using the Wave Guide antenna: **No** orientation is required!

Function "envelope curve display" (0E3)

The envelope curve is displayed in this function. You can use it to obtain the following information:

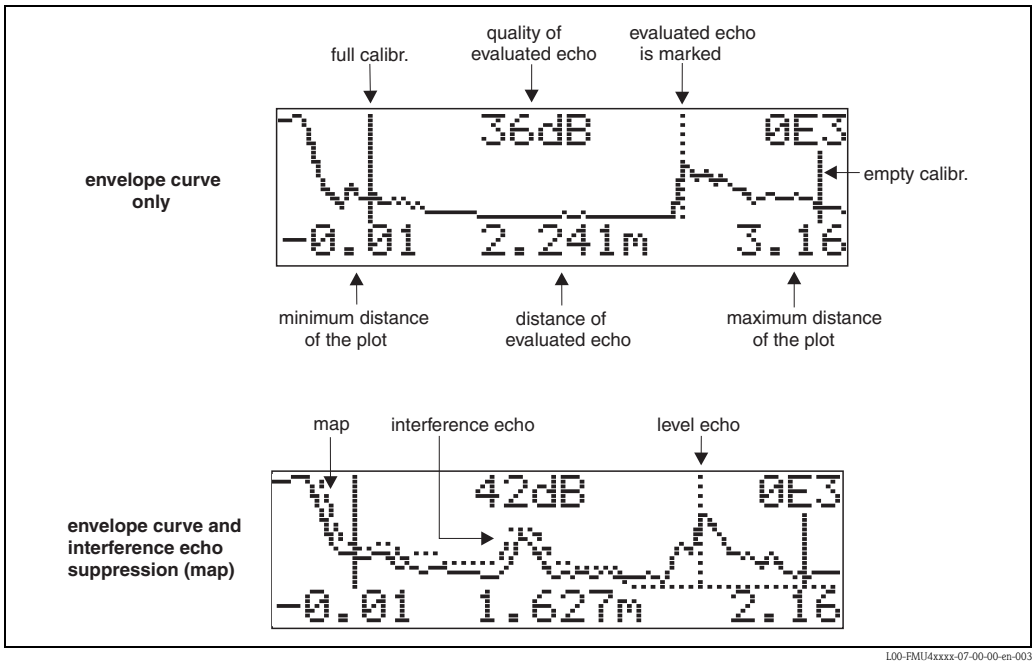

Navigating in the envelope curve display

Using navigation, the envelope curve can be scaled horizontally and vertically and shifted to the left or the right. The active navigation mode is indicated by a symbol in the top left hand corner of the display.

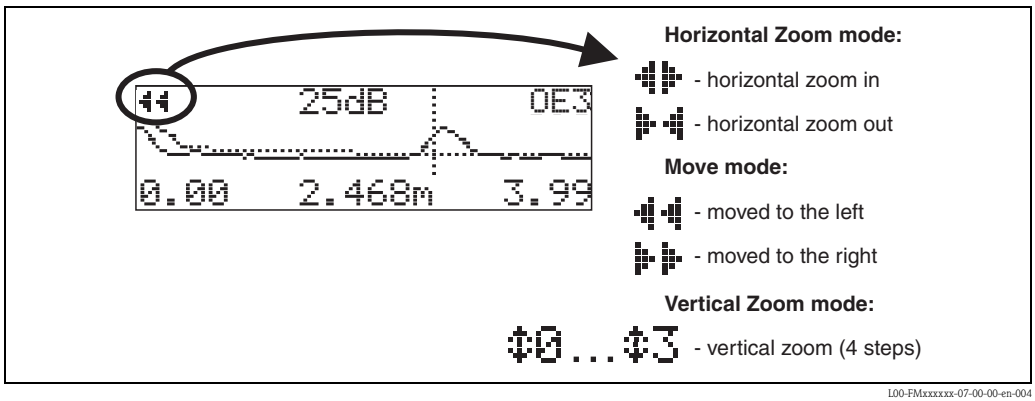

Horizontal Zoom mode

Firstly, go into the envelope curve display. Then press [+] or [−] to switch to the envelope curve navigation. You are then in Horizontal Zoom mode. Either or is displayed.

- [+] increases the horizontal scale.
- [−] reduces the horizontal scale.

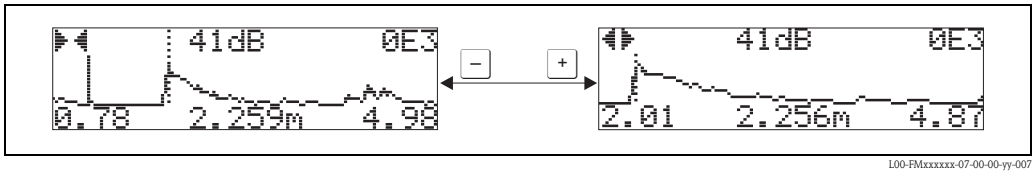

Move mode

Then press E to switch to Move mode. Either ▶▶ or ◀◀ is displayed.
- + shifts the curve to the right.
- − shifts the curve to the left.

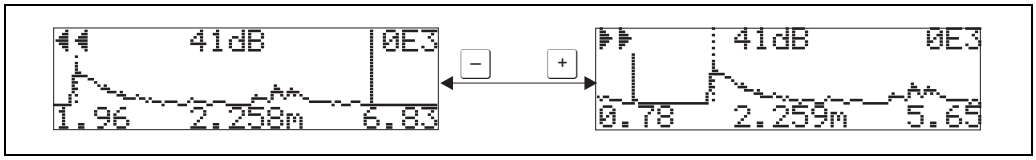

L00-FMxxxxxx-07-00-00-yy-008

Vertical Zoom mode

Press E once more to switch to Vertical Zoom mode. ⇕1 is displayed. You now have the following options.
- + increases the vertical scale.
- − reduces the vertical scale.

The display icon shows the current zoom factor (⇕0 to ⇕3).

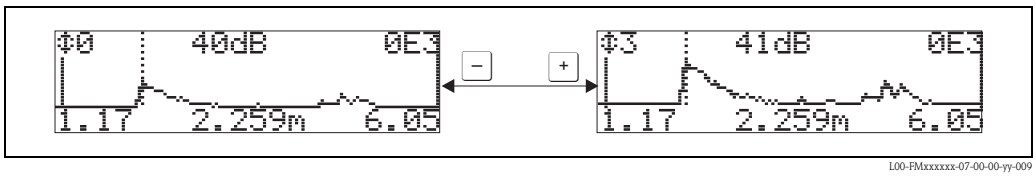

L00-FMxxxxxx-07-00-00-yy-009

Exiting the navigation

- Press E again to run through the different modes of the envelope curve navigation.
- Press + and − to exit the navigation. The set increases and shifts are retained. Only when you reactivate the "**recording curve**" **(0E2)** function does the Micropilot use the standard display again.

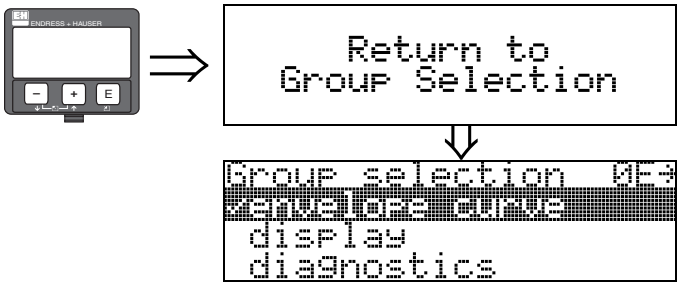

After 3 s, the following message appears

6.5 Basic Setup with the Endress+Hauser operating program

To carry out the basic setup with the operating program, proceed as follows:
- Start the operating program and establish a connection.
- Select the "**basic setup**" function group in the navigation window.

The following display appears on the screen:

Basic Setup step 1/4:

- media type
  - if "**liquid**" is selected in the "**media type**" function for level measurement in liquids
  - if "**solid**" is selected in the "**media type**" function for level measurement in solids

Note!
Each parameter that is changed must be confirmed with the **RETURN** key!

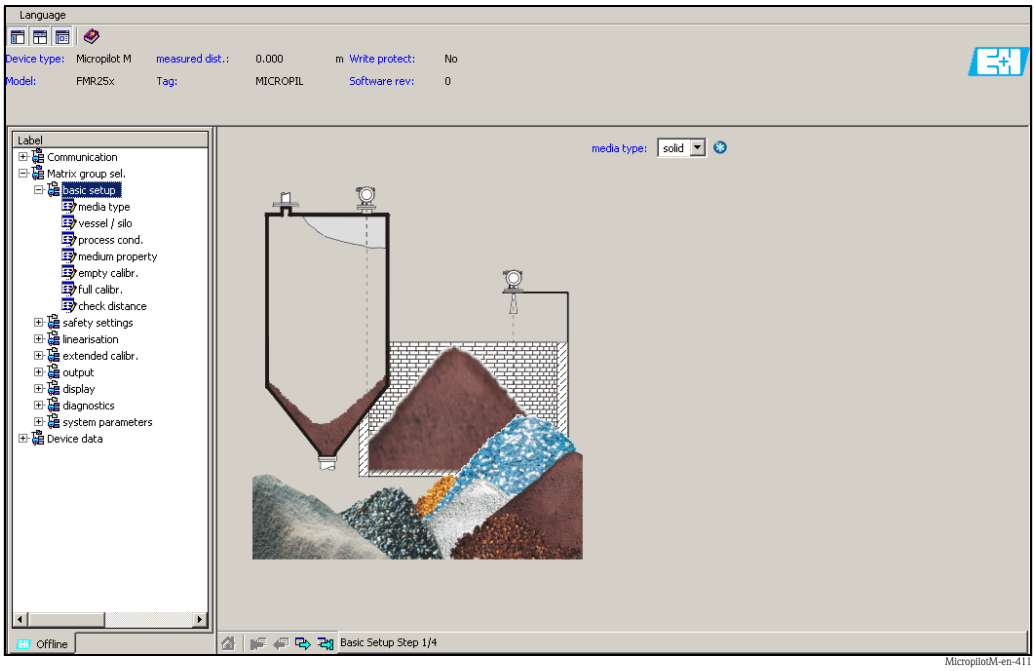

- The "**Next**" button moves you to the next screen display:

Basic Setup step 2/4:

- Enter the application parameters:
  - vessel / silo
  - medium property
  - process cond.

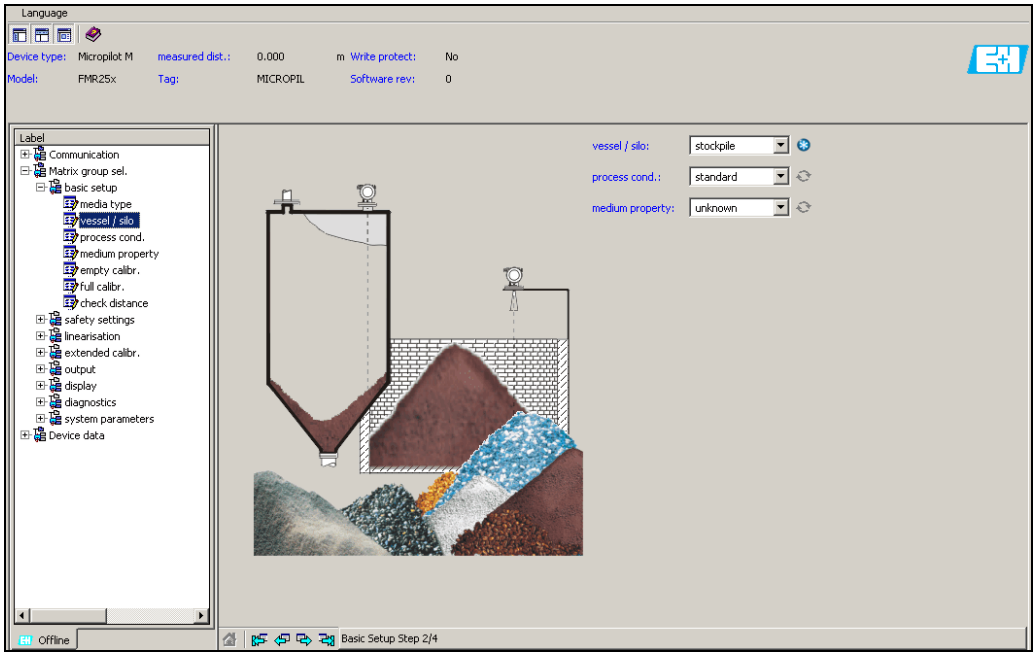

MicropilotM-en-412

Basic Setup step 3/4:

If "**metal silo**", "**concrete silo**", "**...**" is selected in the "**vessel / silo**" function, the following display appears on the screen:

- empty calibr.
- full calibr.

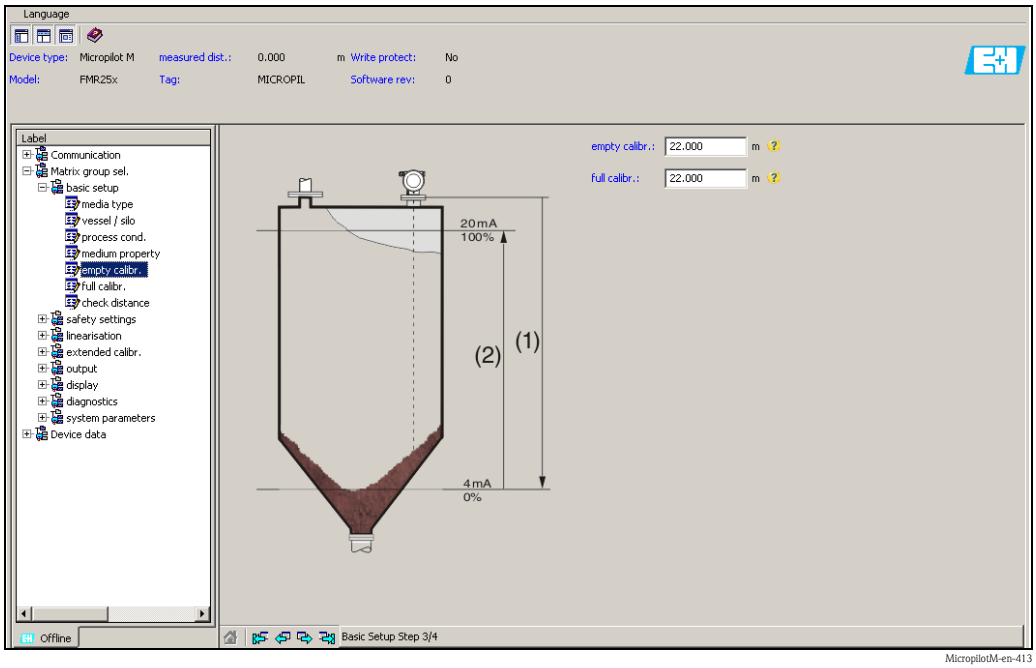

MicropilotM-en-413

Basic Setup step 4/4:

- This step starts the tank mapping
- The measured distance and the current measured value are always displayed in the header

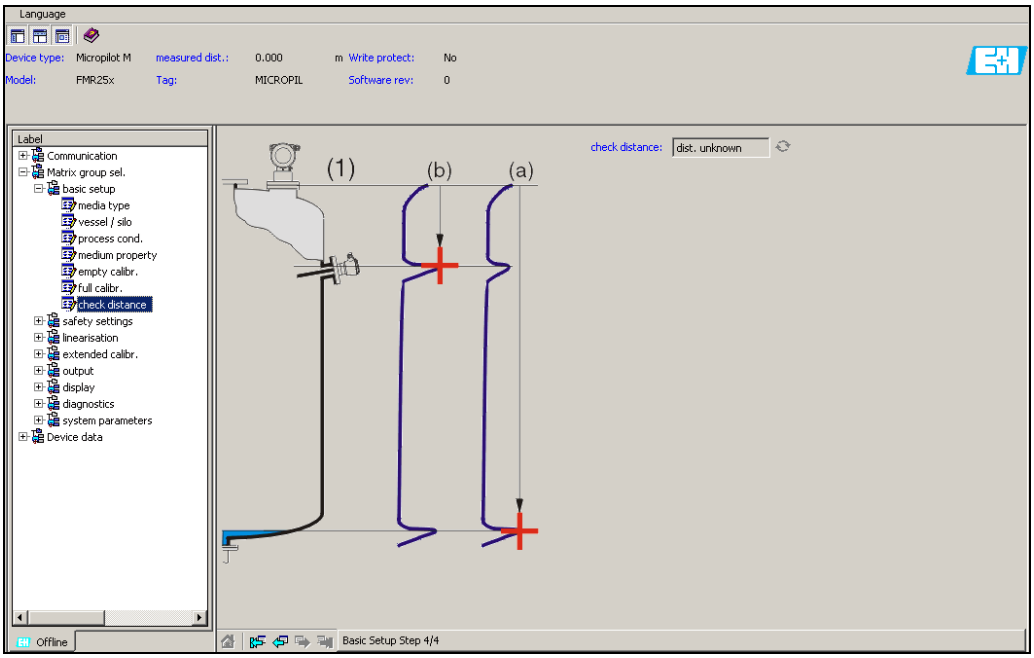

MicropilotM-en-404

6.5.1 Signal analysis via envelope curve

After the basic setup, an evaluation of the measurement using the envelope curve is recommended.

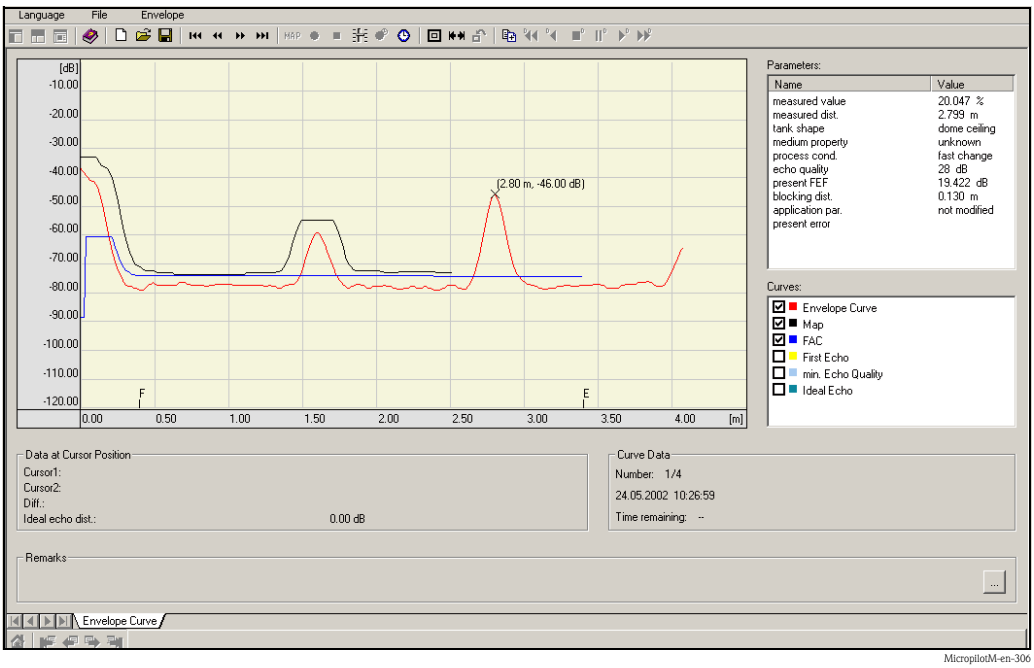

MicropilotM-en-306

Note!
If the level of echo is very weak or there is a heavy interference echo, an orientation of the Micropilot can help optimise the measurement (increase of the useful echo/reduction of the interference echo).

6.5.2 User-specific applications (operation)

For details of setting the parameters of user-specific applications, see separate documentation BA291F/00/en "Description of the instrument functions for Micropilot M" on the enclosed CD-ROM.

7 Maintenance

The Micropilot M measuring instrument requires no special maintenance.

Exterior cleaning

When cleaning the exterior of measuring devices, always use cleaning agents that do not attack the surface of the housing and the seals.

Replacing seals

The process seals of the sensors must be replaced periodically, particularly if molded seals (aseptic construction) are used. The period between changes depends on the frequency of cleaning cycles and on the temperature of the measured substance and the cleaning temperature.

Repairs

The Endress+Hauser repair concept assumes that the measuring devices have a modular design and that customers are able to undertake repairs themselves. Spare parts are contained in suitable kits. They contain the related replacement instructions. All the spare parts kits which you can order from Endress+Hauser for repairs to the Micropilot M are listed with their order numbers on and . Please contact Endress+Hauser Service for further information on service and spare parts.

Repairs to Ex-approved devices

When carrying out repairs to Ex-approved devices, please note the following:
- Repairs to Ex-approved devices may only be carried out by trained personnel or by the Endress+Hauser Service.
- Comply with the prevailing standards, national Ex-area regulations, safety instructions (XA) and certificates.
- Only use original spare parts from Endress+Hauser.
- When ordering a spare part, please note the device designation on the nameplate. Only replace parts with identical parts.
- Carry out repairs according to the instructions. On completion of repairs, carry our the specified routine test on the device.
- Only Endress+Hauser Service may convert a certified device into a different certified variant.
- Document all repair work and conversions.

Replacement

After a complete Micropilot or electronic module has been replaced, the parameters can be downloaded into the instrument again via the communication interface. Prerequisite to this is that the data were uploaded to the PC beforehand using the ToF Tool / FieldCare.
Measurement can continue without having to carry out a new setup.

- You may have to activate linearisation (see BA291F on the enclosed CD-ROM)
- You may need to record the tank map again (see Basic Setup)

After an antenna component or electronic has been replaced, a new calibration must be carried out. This is described in the repair instructions.

8 Accessories

Various accessories, which can be ordered separately from Endress+Hauser, are available for the Micropilot M.

Weather protection cover

A Weather protection cover made of stainless steel is recommended for outdoor mounting (order code: 543199-0001). The shipment includes the protective cover and tension clamp.

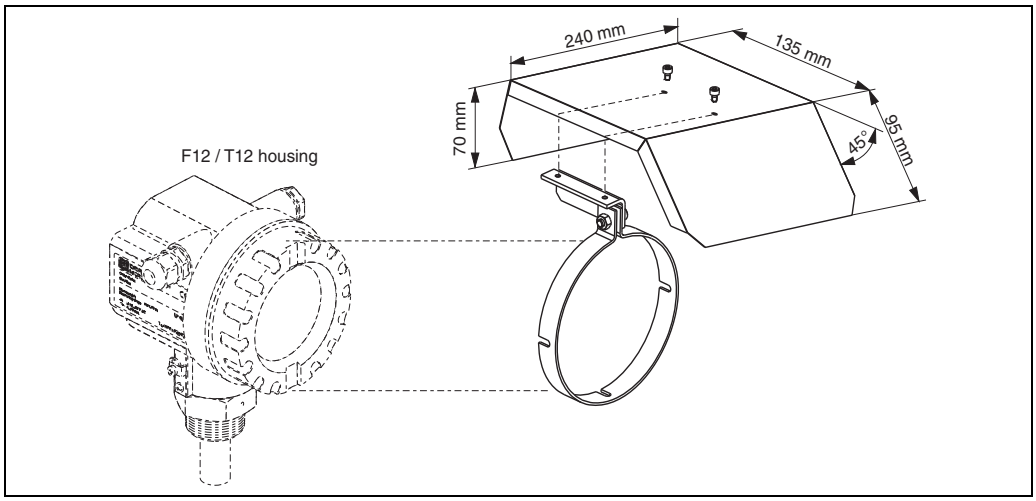

Commubox FXA291

The Commubox FXA291 connects Endress+Hauser field instruments with CDI interface (= Endress+Hauser Common Data Interface) to the USB interface of a personal computer or a notebook. For details refer to TI405C/07/en.

Note!
For the following Endress+Hauser instruments you need the "ToF Adapter FXA291" as an additional accessory:

- Cerabar S PMC71, PMP7x
- Deltabar S PMD7x, FMD7x
- Deltapilot S FMB70
- Gammapilot M FMG60
- Levelflex M FMP4x
- Micropilot FMR130/FMR131
- Micropilot M FMR2xx
- Micropilot S FMR53x, FMR540
- Prosonic FMU860/861/862
- Prosonic M FMU4x
- Tank Side Monitor NRF590 (with additional adapter cable)

ToF Adapter FXA291

The ToF Adapter FXA291 connects the Commubox FXA291 via the USB interface of a personal computer or a notebook to the following Endress+Hauser instruments:

- Cerabar S PMC71, PMP7x
- Deltabar S PMD7x, FMD7x
- Deltapilot S FMB70
- Gammapilot M FMG60
- Levelflex M FMP4x
- Micropilot FMR130/FMR131
- Micropilot M FMR2xx
- Micropilot S FMR53x, FMR540
- Prosonic FMU860/861/862
- Prosonic M FMU4x
- Tank Side Monitor NRF590 (with additional adapter cable)

For details refer to KA271F/00/a2.

Remote display FHX40

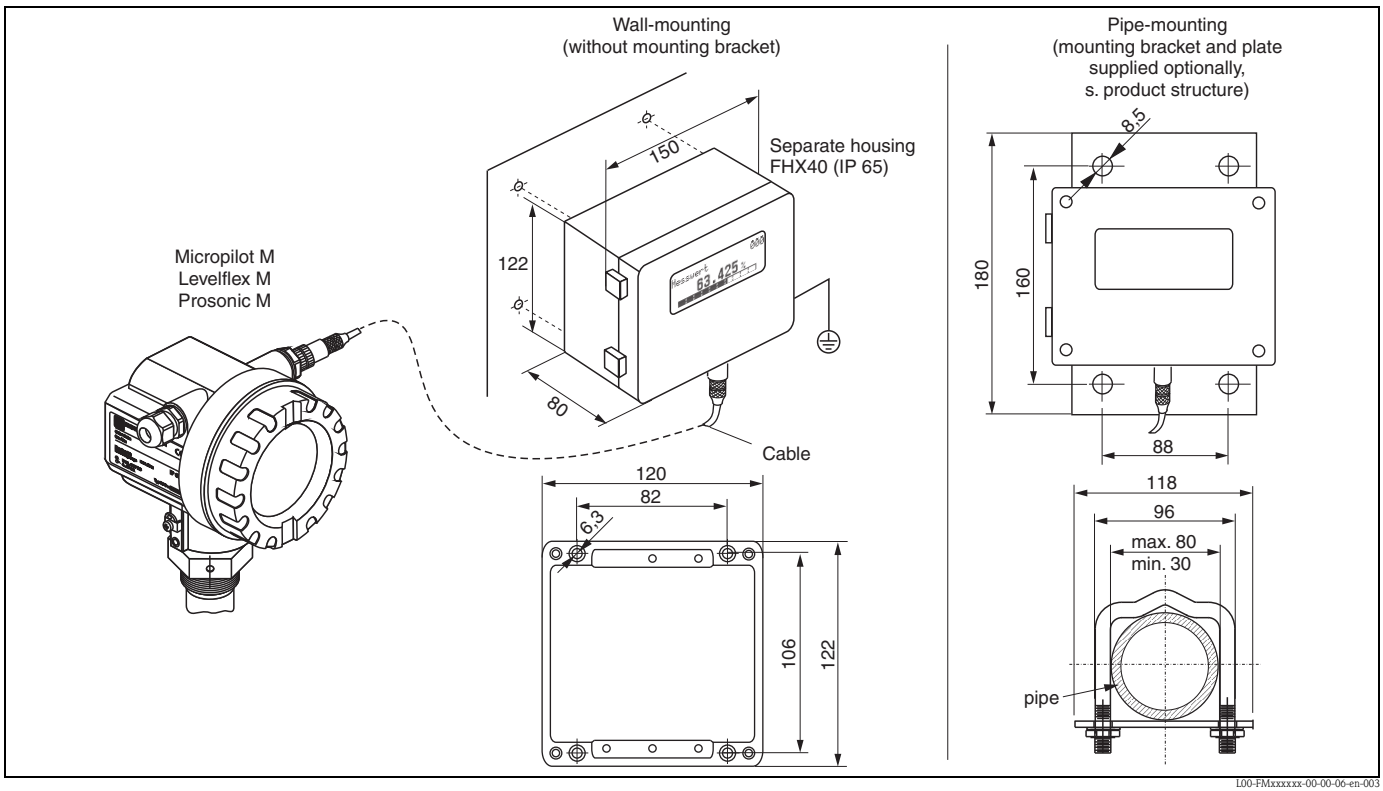

Technical data (cable and housing) and product structure:

Max. cable length	20 m (65 ft)
Temperature range	–30 °C...+70 °C (-22 °F...158 °F)
Degree of protection	IP65 acc. to EN 60529 (NEMA 4)
Materials	Housing: AlSi12; cable glands: nickle plated brass
Dimensions [mm] / [inch]	122x150x80 (HxWxD) / 4.8x5.9x3.2

	Approval:			
	A	Nn-hazardous area		
	1	ATEX II 2 G EEx ia IIC T6, ATEX II 3D		
	S	FM IS Cl.I Div.1 Gr.A-D		
	U	CSA IS Cl.I Div.1 Gr.A-D		
	N	CSA General Purpose		
	K	TIIS ia IIC T6 (in preparation)		
		Cable:		
		1	20m/65ft; for HART	
		5	20m/65ft; for PROFIBUS PA/FOUNDATION Fieldbus	
			Additional option:	
			A	Basic version
			B	Mounting bracket, pipe 1"/ 2"
FHX40 -				Complete product designation

For connection of the remote display FHX40 use the cable which fits the communication version of the respective instrument.

Commubox FXA191 HART

For intrinsically safe communication with ToF Tool/FieldCare via the RS232C interface. For details refer to TI237F/00/en.

Commubox FXA195 HART

For intrinsically safe communication with ToF Tool/FieldCare via the USB interface. For details refer to TI404F/00/en.

9 Trouble-shooting

9.1 Trouble-shooting instructions

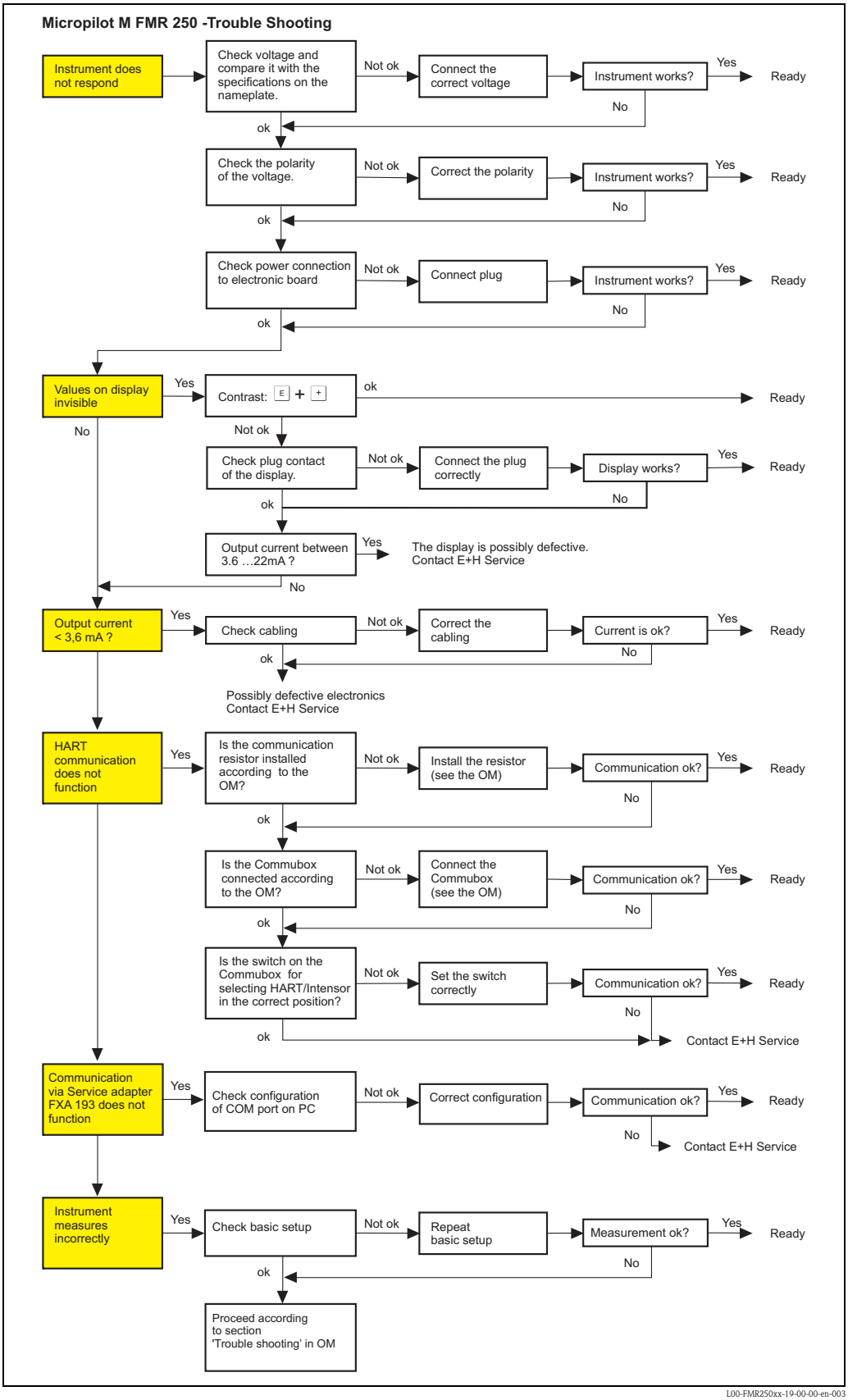

L00-FMR250xx-19-00-00-en-003

9.2 System error messages

Code	Description	Possible cause	Remedy
A102	checksum error general reset & new calibr.required	device has been powered off before data could be stored; emc problem; E^2PROM defect	reset; avoid emc problem; if alarm prevails after reset, exchange electronics
W103	initialising - please wait	E^2PROM storage not yet finished	wait some seconds; if warning prevails, exchange electronics
A106	downloading please wait	processing data download	wait until warning disappears
A110	checksum error general reset & new calibr.required	device has been powered off before data could be stored; emc problem; E^2PROM defect	reset; avoid emc problem; if alarm prevails after reset, exchange electronics
A111	electronics defect	RAM defective	reset; if alarm prevails after reset, exchange electronics
A113	electronics defect	RAM defective	reset; if alarm prevails after reset, exchange electronics
A114	electronics defect	E^2PROM defect	reset; if alarm prevails after reset, exchange electronics
A115	electronics defect	general hardware problem	reset; if alarm prevails after reset, exchange electronics
A116	download error repeat download	checksum of stored data not correct	restart download of data
A121	electronics defect	no factory calibration existant; EPROM defective	contact service
W153	initialising - please wait	initialisation of electronics	wait some seconds; if warning prevails, power off device and power on again
A155	electronics defect	hardware problem	reset; if alarm prevails after reset, exchange electronics
A160	checksum error general reset & new calibr.required	device has been powered off before data could be stored; emc problem; E^2PROM defect	reset; avoid emc problem; if alarm prevails after reset, exchange electronics
A164	electronics defect	hardware problem	reset; if alarm prevails after reset, exchange electronics
A171	electronics defect	hardware problem	reset; if alarm prevails after reset, exchange electronics
A231	sensor 1 defect check connection	HF module or electronics defective	exchange HF module or electronics
W511	no factory calibration ch1	factory calibration has been deleted	record new factory calibration
A512	recording of mapping please wait	mapping active	wait some seconds until alarm disappears
A601	linearisation ch1 curve not monotone	linearisation not monotonously increasing	correct linearisation table
W611	less than 2 linearisation points for channel 1	number of entered linearisation points < 2	correct linearisation table
W621	simulation ch. 1 on	simulation mode is active	switch off simulation mode

Code	Description	Possible cause	Remedy
E641	no usable echo channel 1 check calibr.	echo lost due to application conditions or built up on antenna	check installation; optimize orientation of antenna; clean antenna (cf. OM)
E651	level in safety distance - risk of overspill	level in safety distance	alarm will disappear as soon as level leaves safety distance;
E671	linearisation ch1 not complete, not usable	linearisation table is in edit mode	activate linearisation table
W681	current ch1 out of range	current out of range (3.8 mA...21.5 mA)	check calibration and linearisation

9.3 Application errors in liquids

Error	Output	Possible cause		Remedy
A warning or alarm has occurred.	Depending on the configuration	See table of error messages (see Page 74)		1. See table of error messages (see Page 74)
Measured value (00) is incorrect	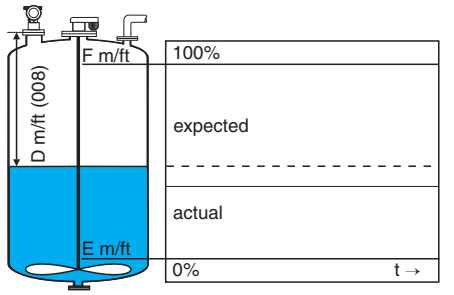 L00-FMR2xxxx-19-00-00-en-019	Measured distance (008) OK?	yes →	1. Check empty calibr. (005) and full calibr. (006). 2. Check linearisation: → level/ullage (040) → max. scale (046) → diameter vessel (047) → Check table
		no ↓		
		Measurement in bypass or stilling well?	yes →	1. Is bypass or stilling well selected in tank shape (002)? 2. Is the pipe diameter (007) correct?
		no ↓		
		An interference echo may have been evaluated.	yes →	1. Carry out tank mapping → basic setup
No change off measured value on filling/emptying	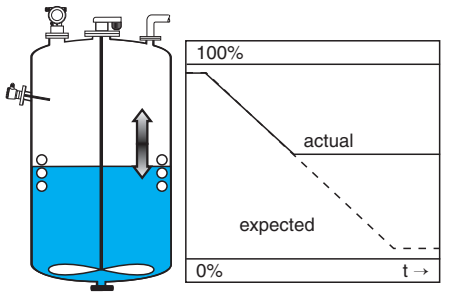 L00-FMR2xxxx-19-00-00-en-014	Interference echo from installations, nozzle or extension on the antenna		1. Carry out tank mapping → basic setup 2. If necessary, clean antenna 3. If necessary, select better mounting position 4. If necessary due to wide interference echos set function detection window (0A7) to "off"

Error	Output	Possible cause		Remedy
If the surface is not calm (e.g. filling, emptying, agitator running), the measured value jumps sporadically to a higher level	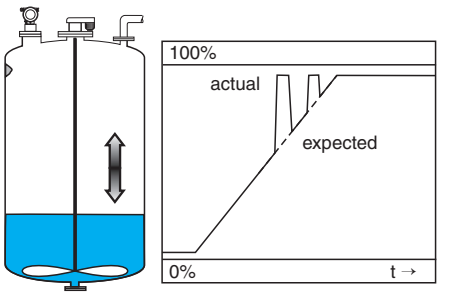 L00-FMR2xxxx-19-00-00-en-015 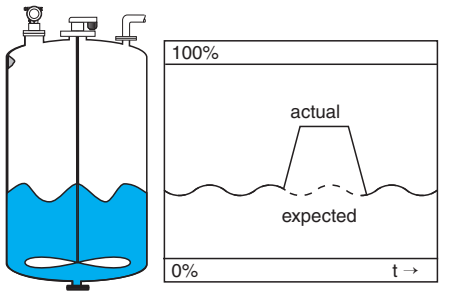 L00-FMR2xxxx-19-00-00-en-016	Signal is weakened by the rough surface – the interference echoes are sometimes stronger		1. Carry out tank mapping → basic setup 2. Set the process cond. (004) to "turb. surface" or "agitator" 3. Increase the output damping (058) 4. Optimise the orientation (see Page 80) 5. If necessary, select a better mounting position and/or larger antenna
During filling/ emptying the measured value jumps ownwards	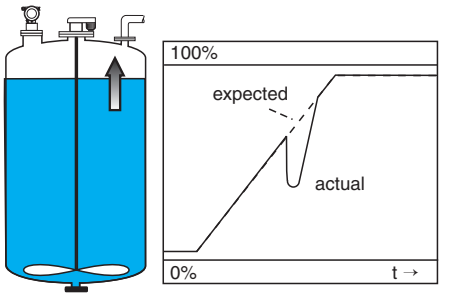 L00-FMR2xxxx-19-00-00-en-017	Multiple echoes	yes →	1. Check the tank shape (002), e.g. "dome ceiling" or "horizontal cyl" 2. In the range of the blocking dist. (059) there is no echo evaluation → Adapt the value 3. If possible, do not select central installation position 4. Perhaps use a stilling well
E 641 (loss of echo)	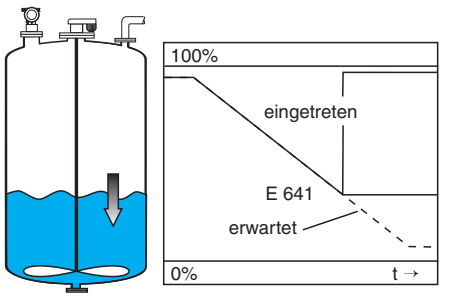 L00-FMR2xxxx-19-00-00-en-018	Level echo is too weak. Possible causes: ■ Rough surface due to filling/ emptying ■ Agitator running ■ Foam	yes →	1. Check application arameters (002), (003) and (004) 2. Optimise alignment (see Page 80) 3. If necessary, select a better installation position and/or larger antenna

9.4 Application errors in solids

Error	Output	Possible cause		Remedy
A warning or alarm has occurred.	Depending on the configuration	See table of error messages (see Page 74)		1. See table of error messages (see Page 74)
Measured value (00) is incorrect	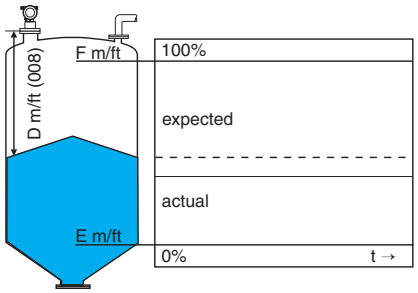 L00-FMR250xx-19-00-00-en-019	Measured distance (008) OK?	yes →	1. Check empty calibr. (005) and full calibr. (006). 2. Check linearisation: → level/ullage (040) → max. scale (046) → Check table
		no ↓		
		An interference echo may have been evaluated.	yes →	1. Carry out tank mapping → basic setup
No change off measured value on filling/emptying	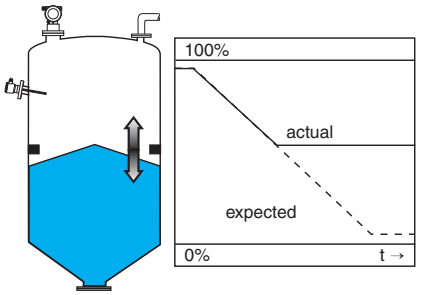 L00-FMR250xx-19-00-00-en-014	Interference echo from installations, nozzle or build up on the antenna		1. Carry out tank mapping → basic setup 2. If necessary, use top target positioner to aim antenna better to product surface (avoidance of interference echo) (see Page 80) 3. If necessary, clean antenna (air purge) 4. If necessary, select better mounting position 5. If necessary due to wide interference echos set function detection window (0A7) to "off"

Error	Output	Possible cause		Remedy
During filling/ emptying or measumement the measured value jumps sporadically to a higher level	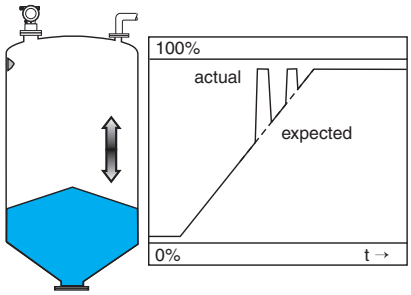	Signal is weakened (e.g. by fluidisation of the surface, extreme dust formation) – the interference echoes are sometimes stronger. Strong build-up, filling stream in path of beam.		1. Carry out tank mapping → basic setup 2. Increase the output damping (058) 3. Optimise the orientation (see Page 80) 4. If necessary, select a better mounting position and/or larger antenna 5. If necessary, clear antenna
E 641 (loss of echo)	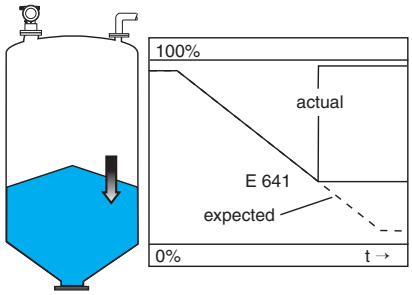	Level echo is too weak. Possible causes: ■ fluidisation of the surface ■ extreme dust formation ■ angle of repose	yes →	1. Check application arameters (00A), (00B) and (00C) 2. Optimise alignment (see Page 80) 3. If necessary, select a better installation position and/or larger antenna
Measured value jumps to higher levels and remains there	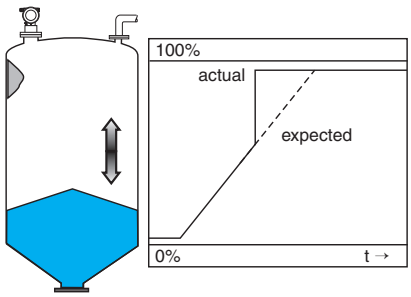	Possible causes: ■ build-up at container ■ build-up at antenna ■ strong condensate formation at antenna		1. Periodic cleaning 2. Carry out tank mapping → basic setup 3. Increase the output damping (058) 4. Optimise the orientation (see Page 80) 5. If necessary, select a better mounting position and/or larger antenna

9.5 Orientation of the Micropilot

For orientation a marker is found on the flange or threaded boss of the Micropilot. During installation this must be oriented as follows (see Page 12):
- In tanks: to the vessel wall
- In stilling wells: to the slots
- In bypass pipes: vertical to the tank connectors
- When using the Wave Guide antenna **no** orientation is required!

After commissioning the Micropilot, the echo quality indicates whether a sufficiently large measuring signal is obtained. If necessary, the quality can be optimised later. Vice versa, the presence of an interference echo can be used to minimise this by optimum orientation. The advantage of this is that the subsequent tank mapping uses a somewhat lower level that causes an increase in the strength of the measuring signal.
Proceed as follows:



Warning!
Subsequent alignment can lead to personal injury. Before you unscrew or loosen the process connection, make sure that the vessel is not under pressure and does not contain any injurious substances.

1. It is best to empty the container so that the bottom is just covered. However, alignment can be carried out even if the vessel is empty.
2. Optimisation is best carried out with the aid of the envelope graph in the display or the ToF Tool.
3. Unscrew the flange or loosen the threaded boss by a half a turn.
4. Turn the flange by one hole or screw the threaded boss by one eighth of a turn. Note the echo quality.
5. Continue to turn until 360° is reached.
6. Optimum alignment:

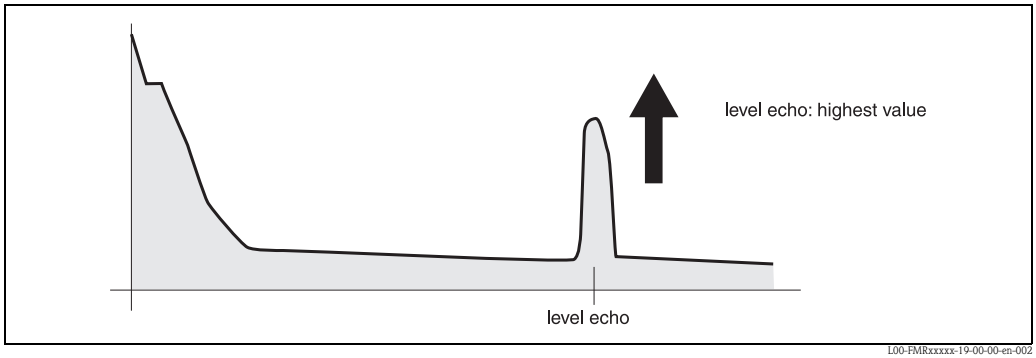

Fig. 5: Vessel partly full, no interference echo obtained

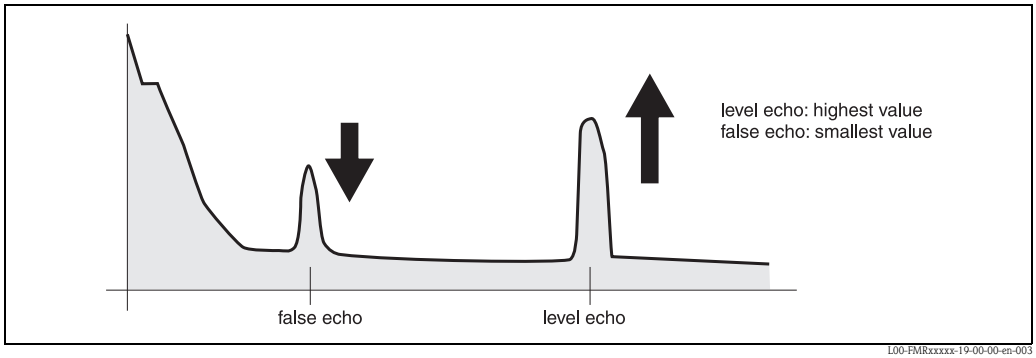

Fig. 6: Vessel partly full, interference echo obtained:

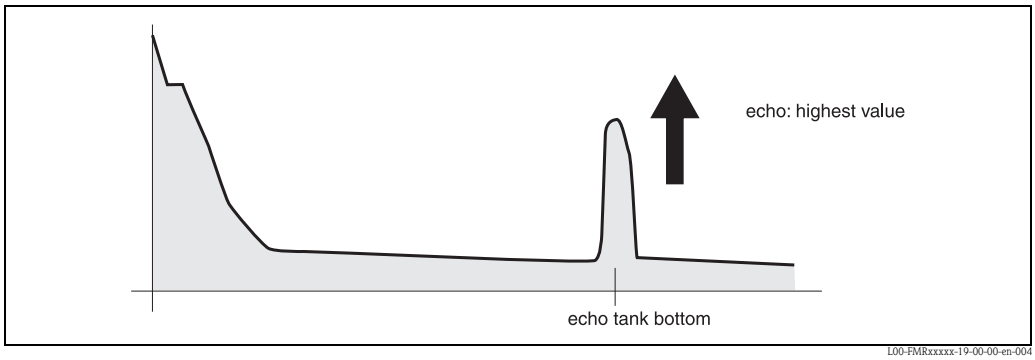

Fig. 7: Vessel empty, no interference echo

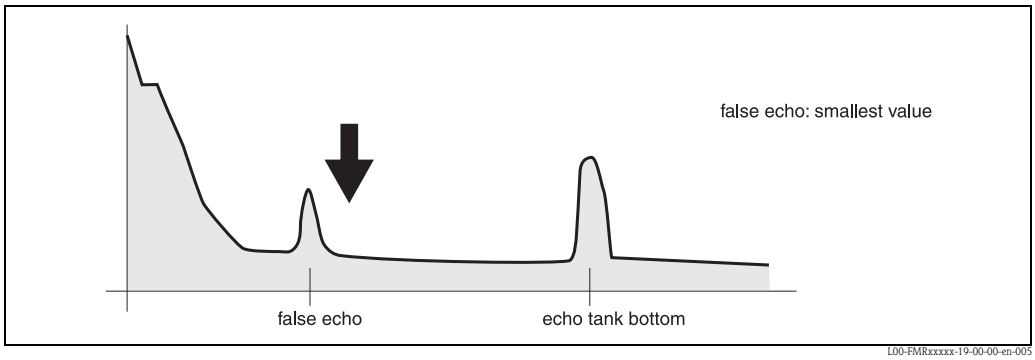

Fig. 8: Vessel empty, interference echo obtained

7. Fix the flange or threaded boss in this position.
   If necessary, replace the seal.
8. Carry out tank mapping, see Page 59.

Top target positioner - optional
Using top target positioner it is possible to tilt the antenna axis by up to 15° in all directions. The top target positioner is used for the optimum alignment of the radar beam with the bulk solids surface.

9.6 Spare parts

Note!
You can order spare parts directly from your E+H service organization by giving the serial number which is printed on the measuring transducer nameplate (see Page 8s. Seite 8 ff.). The corresponding spare part number also appears on each spare part. Installation instructions are given on the instruction card that is also delivered.

Spare parts Micropilot M FMR250, F12 housing with combined wiring and electronics compartment

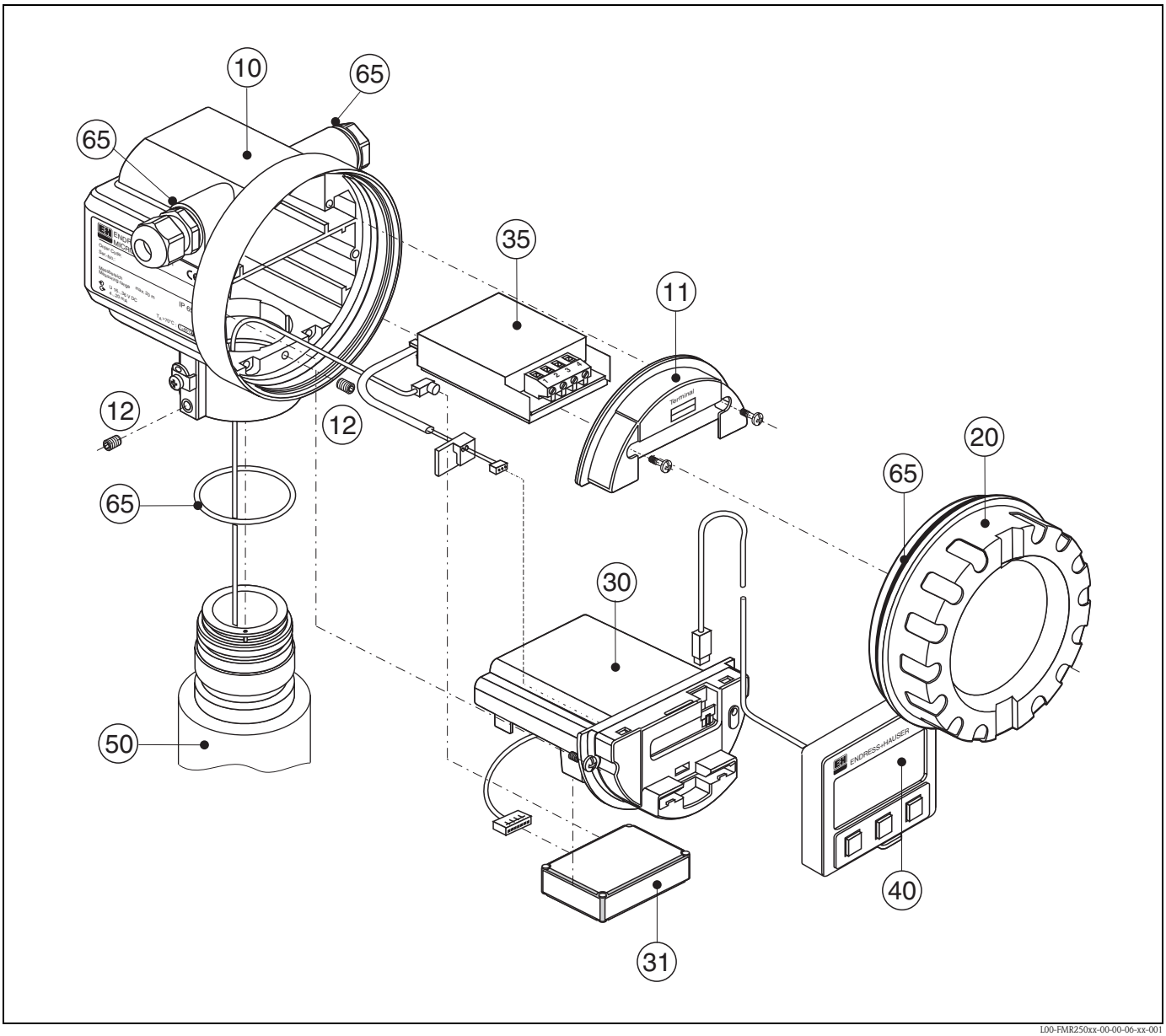

10 Housing - for E+H service only!

543120-0022	Housing F12, Aluminium, G1/2
543120-0023	Housing F12, Aluminium, NPT1/2
543120-0024	Housing F12, Aluminium, M20

11 Hood for terminal compartment

52006026	Cover terminal compartment F12
52019062	Hood terminal compartment F12, FHX40

12 Screw set

535720-9020	Set of screws housing F12/T12

20 Cover

52005936	Cover F12/T12 Aluminium, window, gasket
517391-0011	Cover F12/T12 Aluminium, coated, gasket

30 Electronics

71026754	Electronics FMR24x/FMR250, Ex, HART, v5.0
71026819	Electronics FMR24x/FMR250, Ex, PA, v5.0
71026820	Electronics FMR24x/FMR250, Ex, FF, v5.0

31 HF module

52024953	HF module FMR24x, FMR259, 26 GHz version: uP III.3 for electronics from software version 1.0 Micropilot M FMR250 for electronics from software version 5.0 Micropilot M FMR24x, advanced dynamics

35 Terminal module / power supply board

52006197	Terminal module 4pole, HART, 2-wire with cable connection
52012156	Terminal module 4pole, PROFIBUS PA, FOUNDATION Fieldbus

40 Display

52026443	Display VU331, version 2

50 Antenna assembly with process connection on request!

65 Sealing kit

535720-9010	consists of: 2 x gasket Pg13.5 FA 2 x O-ring 17.0x2.0 EPDM 1 x O-ring 49.21x3.53 EPDM 2 x O-ring 17.12x2.62 FKM 1 x O-ring 113.9x3.63 EPDM 1 x O-ring 72.0x3.0 EPDM

Spare parts Micropilot M FMR250, T12 housing with separate wiring and electronics compartment

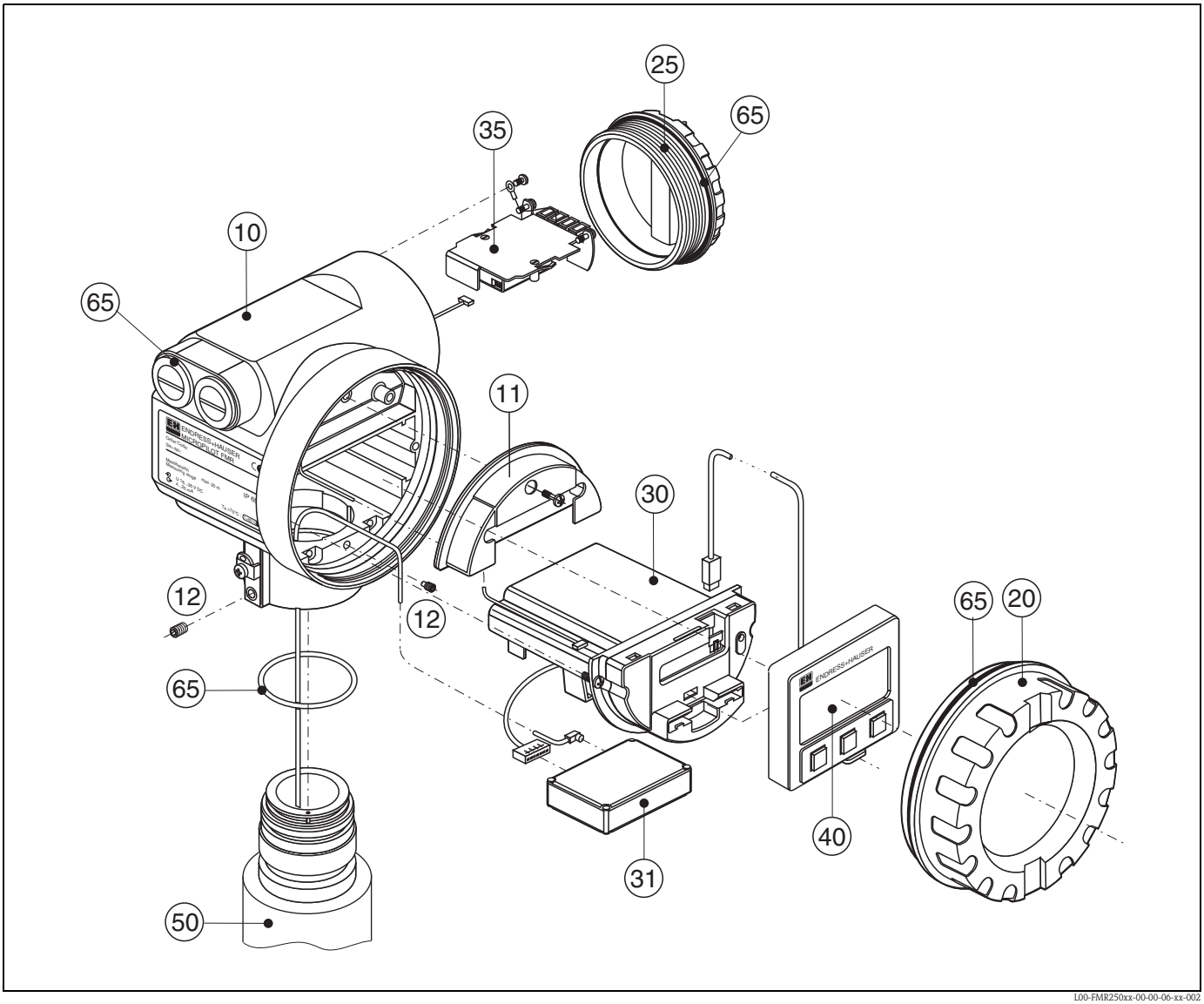

10 Housing - for E+H service only!

543180-0022	Housing T12, Aluminium, coated, G1/2, PAL
543180-0023	Housing T12, Aluminium, coated, NPT1/2, PAL
543180-0024	Housing T12, Aluminium, coated, M20, PAL
543180-1023	Housing T12, Aluminium, NPT1/2, PAL, cover, EEx d
52006204	Housing T12, Aluminium, G1/2, PAL, cover, EEx d
52006205	Housing T12, Aluminium, M20, PAL, cover, EEx d

11 Hood for terminal compartment

52005643	Hood T12

12 Screw set

535720-9020	Set of screws housing F12/T12

20 Cover

52005936	Cover F12/T12 Aluminium, window, gasket
517391-0011	Cover F12/T12 Aluminium, coated, gasket

25 Cover for terminal compartment

518710-0020	Cover T3/T12, Aluminium, coated, gasket

30 Electronics

71026754	Electronics FMR24x/FMR250, Ex, HART, v5.0
71026819	Electronics FMR24x/FMR250, Ex, PA, v5.0
71026820	Electronics FMR24x/FMR250, Ex, FF, v5.0

31 HF module

52024953	HF module FMR24x, FMR259, 26 GHz version: uP III.3 for electronics from software version 1.0 Micropilot M FMR250 for electronics from software version 5.0 Micropilot M FMR24x, advanced dynamics

35 Terminal module / power supply board

52013302	Terminal module 4pole, 2-wire, HART, EEx d
52018949	Terminal module 4pole, 2-wire, HART, EEx ia, overvoltage protection
52013303	Terminal module 2pole, 2-wire, PROFIBUS PA / FOUNDATION Fieldbus, EEx ia
52018950	Terminal module 4pole, 2-wire, PROFIBUS PA / FOUNDATION Fieldbus, EEx ia, overvoltage protection

40 Display

52026443	Display VU331, version 2

50 Antenna assembly with process connection on request!

65 Sealing kit

535720-9010	consists of: 2 x gasket Pg13.5 FA 2 x O-ring 17.0x2.0 EPDM 1 x O-ring 49.21x3.53 EPDM 2 x O-ring 17.12x2.62 FKM 1 x O-ring 113.9x3.63 EPDM 1 x O-ring 72.0x3.0 EPDM

Spare parts Micropilot M FMR250, F23 housing with combined wiring and electrinics compartment

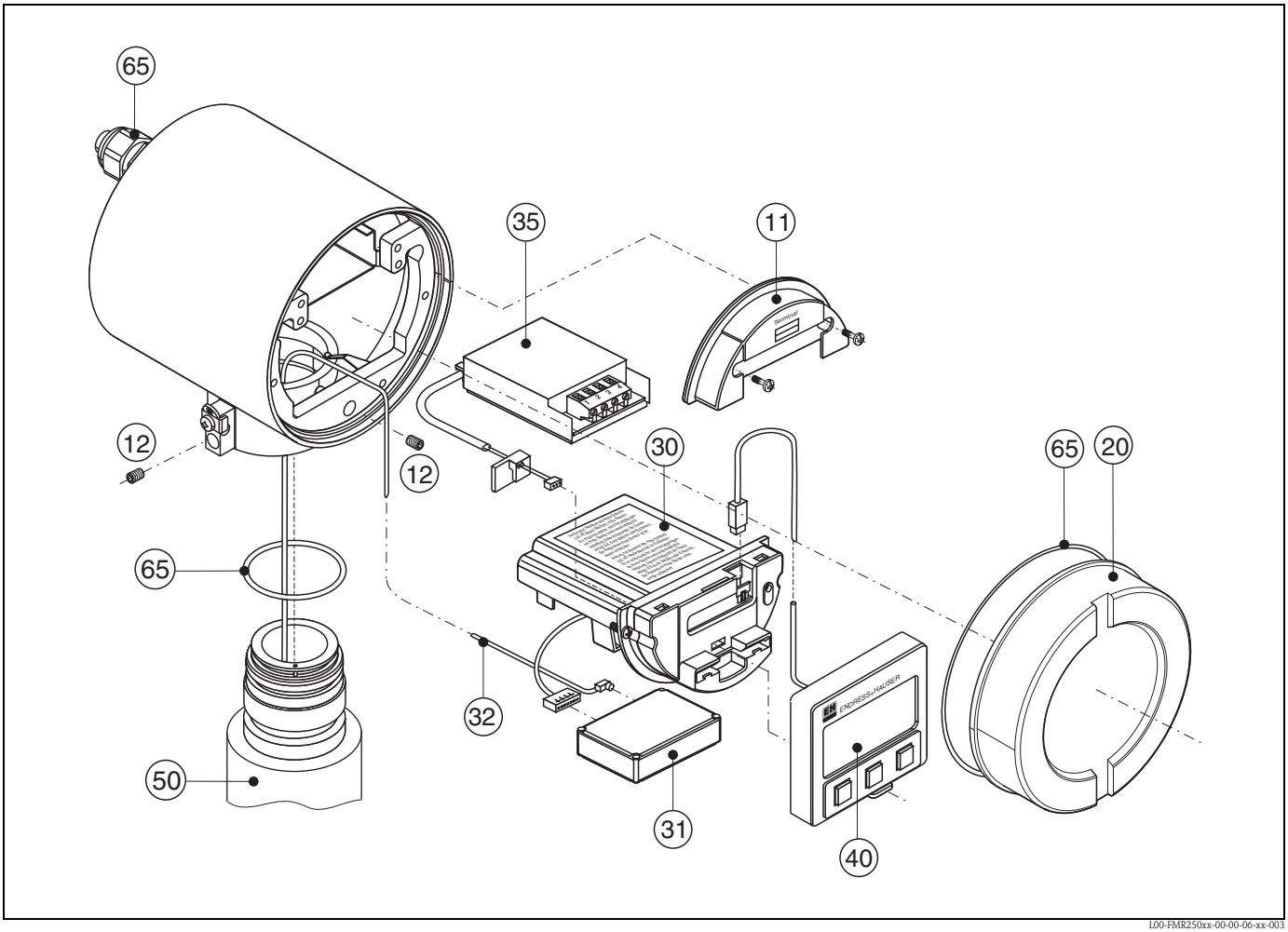

Stainless steel housing on request!

20 Cover

52018670	Cover F23, 316L, sight glass, gasket
52018671	DeCoverckel F23, 316L, gasket

50 Antenna assembly with process connection on request!

65 Sealing kit

535720-9010	consists of:
	2 x gasket Pg13.5 FA
	2 x O-ring 17.0x2.0 EPDM
	1 x O-ring 49.21x3.53 EPDM
	2 x O-ring 17.12x2.62 FKM
	1 x O-ring 113.9x3.63 EPDM
	1 x O-ring 72.0x3.0 EPDM

Spare parts Micropilot M FMR250, horn/parabolic antenna

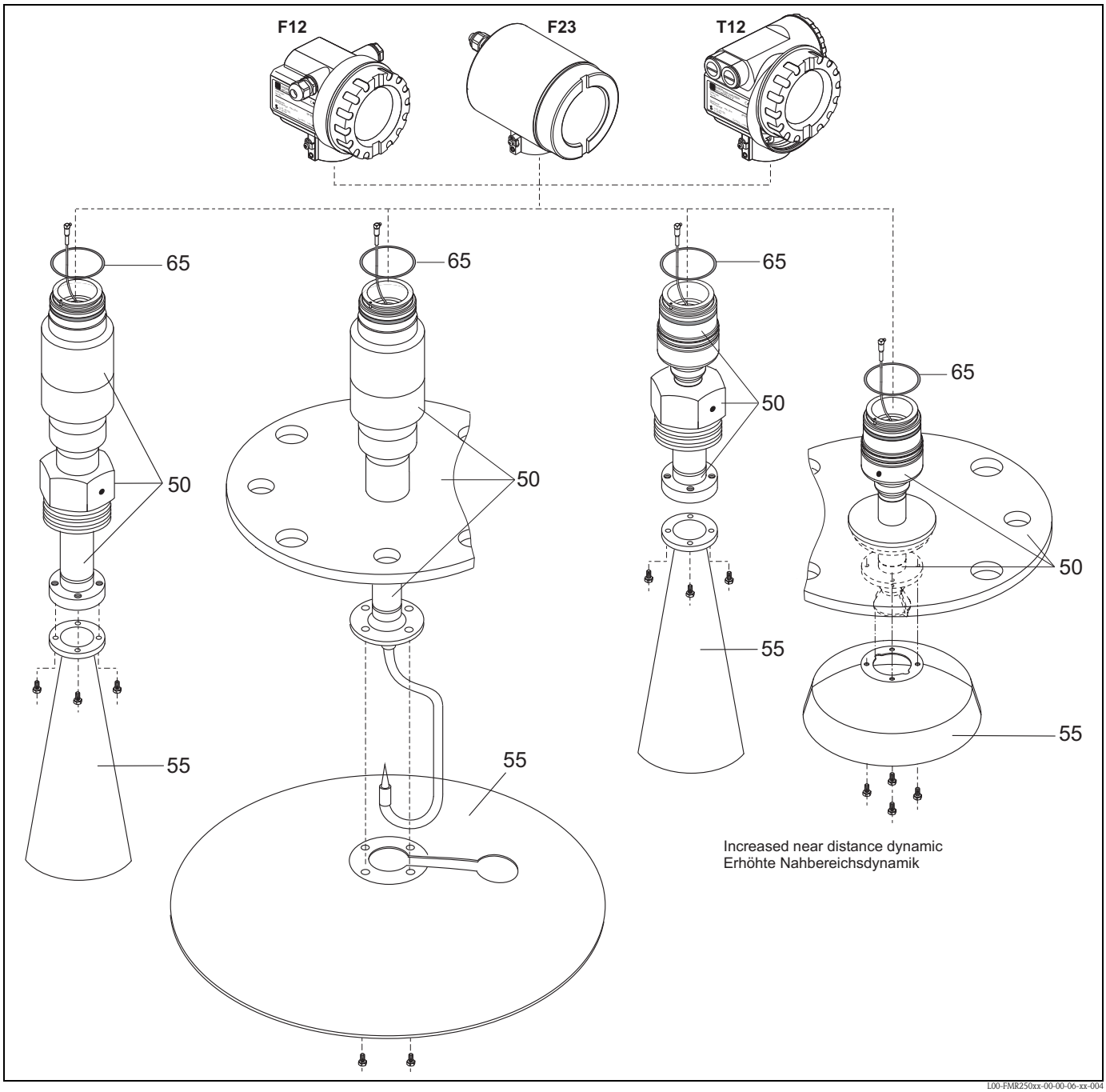

50 Antenna assembly with process connection on request!

55 Horn antenna

52025230	Horn FMR250 80mm/3", SS
71020169	Horn FMR250 100mm/4", length 430mm, SS

55 Parabolic antenna

52025233	Parabolic reflector 197x25, 316L
71079160	Parabolic reflector DN200_173x60_1.4404
71079156	Parabolic reflector DN250_236x88_1.4404

9.7 Return

The following procedures must be carried out before a transmitter is sent to Endress+Hauser e.g. for repair or calibration:
- Remove all residue which may be present. Pay special attention to the gasket grooves and crevices where fluid may be present. This is especially important if the fluid is dangerous to health, e.g. corrosive, poisonous, carcinogenic, radioactive, etc.
- Always enclose a duly completed "Declaration of contamination" form (a copy of the “Declaration of contamination” is included at the end of this operating manual). Only then can Endress +Hauser transport, examine and repair a returned device.
- Enclose special handling instructions if necessary, for example a safety data sheet as per EN 91/155/EEC.

Additionally specify:
- An exact description of the application.
- The chemical and physical characteristics of the product.
- A short description of the error that occurred (specify error code if possible)
- Operating time of the device.

9.8 Disposal

In case of disposal please seperate the different components according to their material consistence.

9.9 Software history

Date	Software version	Changes to software	Documentation
09.2004	01.01.00	Original software. Operated via: – ToF Tool from version 2.0 – HART communicator DXR375 with Rev. 1, DD 1.	BA291F/00/en/08.04
11.2005	01.04.00	▪ Function: detection window ▪ Communication: PROFIBUS PA Operated via: – ToF Tool from version 4.2 – HART communicator DXR375 with Rev. 1, DD 1.	BA291F/00/en/01.06
09.2006	01.05.00	Support of additional HF modules integrated. ▪ Communication: FOUNDATION Fieldbus	BA291F/00/en/08.06 71030727

9.10 Contact addresses of Endress+Hauser

The addresses of Endress+Hauser are given on the back cover of this operating manual. If you have any questions, please do not hesitate to contact your E+H representative.

10 Technical data

10.1 Additional technical data

10.1.1 Input

Measured variable

The measured variable is the distance between a reference point and a reflective surface (i.e. medium surface).
The level is calculated based on the tank height entered.
The level can be converted into other units (volume, mass) by means of a linearization (32 points).

Operating frequency

- FMR250: K-band

Transmitting power

Average energy density in beam direction:

Distance	Average energy density measuring range = 70 m (229 ft)
1 m	< 64 nW/cm²
5 m	< 2.5 nW/cm²

10.1.2 Output

Output signal

4…20 mA with HART protocol

Signal on alarm

Error information can be accessed via the following interfaces:
- Local display:
  - Error symbol (see Page 39)
  - Plain text display
- Current output
- Digital interface

Linearization

The linearization function of the Micropilot M allows the conversion of the measured value into any unit of length or volume. Linearization tables for calculating the volume in cylindrical tanks are pre-programmed. Other tables of up to 32 value pairs can be entered manually or semi-automatically.

10.1.3 Auxiliary energy

Ripple HART

47...125 Hz: Uss = 200 mV (at 500 Ω)

Max. noise HART

500 Hz...10 kHz: Ueff = 2.2 mV (at 500 Ω)

10.1.4 Performance characteristics

Reference operating conditions	■ temperature = +20 °C (68 °F) ±5 °C (9 °F) ■ pressure = 1013 mbar abs. (14.7 psia) ±20 mbar (0.3 psi) ■ relative humidity (air) = 65 % ±20% ■ ideal reflector ■ no major interference reflections inside the signal beam
Maximum measured error	Typical statements for reference conditions, include linearity, repeatability, and hysteresis: ■ up to 1 m: ±30 mm ■ ex 1 m: ±15 mm (or 0.04% of measuring range, whatever is larger)
Resolution	Digital / analog in % 4…20 mA ■ FMR250: 1mm / 0.03 % of measuring range
Reaction time	The reaction time depends on the parameter settings (min. 1 s). In case of fast level changes, the instrument needs the reaction time to indicate the new value.
Influence of ambiente temperature	The measurements are carried out in accordance with EN 61298-3: ■ digital output (HART, PROFIBUS PA): – **FMR250** average T_K: 5 mm/10 K, max. 15 mm over the entire temperature range -40 °C...+80 °C ■ Current output (additional error, in reference to the span of 16 mA): – **Zero point (4 mA)** average T_K: 0,03 %/10 K, max. 0,45 % over the entire temperature range -40 °C...+80 °C – **Span (20 mA)** average T_K: 0,09 %/10 K, max. 0,95 % over the entire temperature range -40 °C...+80 °C

10.1.5 Operating conditions: Environment

Ambient temperature range	Ambient temperature for the transmitter: -40 °C ... +80 °C (-40 °F … +176 °F), -50 °C (-58 °F) on request. The functionality of the LCD display may be limited for temperatures Ta<-20 °C and Ta>+60 °C. A weather protection cover should be used for outdoor operation if the instrument is exposed to direct sunlight.
Storage temperature	-40 °C … +80 °C (-40 °F … +176°F), -50 °C (-58 °F) on request.
Climate class	DIN EN 60068-2-38 (test Z/AD)
Vibration resistance	DIN EN 60068-2-64 / IEC 68-2-64: 20…2000 Hz, 1 $(m/s^2)^2/Hz$

Cleaning of the antenna

The antenna can get contaminated, depending on the application. The emission and reception of microwaves can thus eventually be hindered. The degree of contamination leading to an error depends on the medium and the reflectivity, mainly determined by the dielectric constant εr. If the medium tends to cause contamination and deposits, cleaning on a regular basis is recommended. Care has to be taken not to damage the antenna in the process of a mechanical or hose-down cleaning (eventually air purge connection). The material compatibility has to be considered if cleaning agents are used!
The maximum permitted temperature at the flange should not be exceeded.

Electromagnetic compatibility

- Interference Emission to EN 61326, Electrical Equipment Class B
- Interference Immunity to EN 61326, Annex A (Industrial) and NAMUR Recommendation NE 21 (EMC)
- A standard installation cable is sufficient if only the analogue signal is used. Use a screened cable when working with a superimposed communications signal (HART).

10.1.6 Operating conditions: Process

Process temperature range / Process pressure limits

Feature "20 Antenna:"			Seal	Temperature	Pressure [1]	Wetted parts
Type	**Option**	**Size**				
Parabolic	**6**	200 mm (8")	FKM Viton GLT	-40 °C ... +200 °C (-40 °F ... +392 °F)	-1 ... 16 bar (...232 psi)	PEEK, seal, 316L/1.4404/1.4435
Horn	**4** **5** **D** **E**	80 mm (3") 100 mm (4") 80 mm (3") 100 mm (4")	FKM Viton GLT	-40 °C ... +200 °C (-40 °F ... +392 °F)	-1 ... 16 bar (...232 psi)	PEEK, seal, 316L/1.4404/1.4435
Parabolic	**G** **H**	200 mm (8") 250 mm (10")	FKM Viton GLT	-40 °C ... +200 °C (-40 °F ... +392 °F)	-1 ... 16 bar (...232 psi)	PTFE, seal, 316L/1.4404/1.4435

↑

Ordering information -

1) E+H UNI flange: -1...1 bar (...14.5 psi)

Optional top target positioner: ±15°, seal: FMK Viton GLT

Dielectric constant

- in free space: εr ≥ 1.6 (for horizontal, even product surfaces: εr ≥ 1.4)

10.1.7 Mechanical construction

Weight

- F12/T12 housing: approx 6 kg + weight of flange
- F23 housing: approx 9.4 kg + weight of flange

10.1.8 Certificates and approvals

CE approval

The measuring system meets the legal requirements of the EC-guidelines. Endress+Hauser confirms the instrument passing the required tests by attaching the CE-mark.

RF approvals

R&TTE, FCC

External standards and guidelines

EN 60529
Protection class of housing (IP-code)

EN 61010
Safety regulations for electrical devices for measurement, control, regulation and laboratory use.

EN 61326
Emissions (equipment class B), compatibility (appendix A – industrial area)

NAMUR
Standards committee for measurement and control in the chemical industry

Ex approval

Correlation of safety instructions (XA) and certificates (ZE) to the instrument:

Instrument	Certificate	Explosion protection	Output	Communication	Housing	PTB 04 ATEX	XA
FMR250	A	Non-hazardous area	A, B, C, D, K, L E, F, M	HART, PROFIBUS PA FOUNDATION Fieldbus	—	—	—
	1	ATEX II 1/2G EEx ia IIC T6	A, B, K	HART	A, B, D	2108	XA313F
			C, D, L E, F, M	PROFIBUS PA FOUNDATION Fieldbus	A, B, D	2108	XA343F
	4	ATEX II 1/2G EEx d [ia] IIC T6	A, B, K	HART	C	2108	XA314F
			C, D, L E, F, M	PROFIBUS PA FOUNDATION Fieldbus	C	2108	XA344F
	G	ATEX II 3G EEx nA II T6	A, B, C, D, K, L E, F, M	HART, PROFIBUS PA FOUNDATION Fieldbus	—	2108	XA233F
	B	ATEX II 1/2GD EEx ia IIC T6, Alu blind cover	A, B, K	HART	A, B	2108	XA312F
			A, B	HART	D	2108	XA312F
			C, D, L E, F, M	PROFIBUS PA FOUNDATION Fieldbus	A, B	2108	XA342F
			C, D E, F	PROFIBUS PA FOUNDATION Fieldbus	D	2108	XA342F
	C	ATEX II 1/2G EEx ia IIC T6 ATEX II 1/3D	A, B, K	HART	A, B	2108	XA312F
			A, B	HART	D	2108	XA312F
			C, D, L E, F, M	PROFIBUS PA FOUNDATION Fieldbus	A, B	2108	XA342F
			C, D E, F	PROFIBUS PA FOUNDATION Fieldbus	D	2108	XA342F
	D	ATEX II 1/2D, Alu blind cover	A, B, K	HART	C	2108	XA315F
			A, B	HART	A, B, D	2108	XA315F
			C, D, L E, F, M	PROFIBUS PA FOUNDATION Fieldbus	C	2108	XA345F
			C, D E, F	PROFIBUS PA FOUNDATION Fieldbus	A, B, D	2108	XA345F
	E	ATEX II 1/3D	A, B, K	HART	A, D, C	2108	XA315F
			A, B	HART	B	2108	XA315F
			C, D, L E, F, M	PROFIBUS PA FOUNDATION Fieldbus	A, D, C	2108	XA345F
			C, D E, F	PROFIBUS PA FOUNDATION Fieldbus	B	2108	XA345F

Instrument	Certificate	Explosion protection	Output	Communication	Housing	NEPSI GYJ...	XA
FMR250	I	Ex ia IIC T6...T1	A, B, K	HART	A, B, C, D	...081023	XA445F
FMR250	I	Ex ia IIC T1...T6	D, E, F, K, L, M	PROFIBUS PA, FOUNDATION Fieldbus	A, B, C, D	...081023	XA447F
FMR250	J	Ex d [ia] IIC T1...T6	A, B, C, D, E, F, K, L, M	HART, PROFIBUS PA, FOUNDATION Fieldbus	C	...081024	XA448F
FMR250	Q	DIP A20/21 T_A, T* IP65 DIP A21 T_A, T* IP65 DIP A20/22 T_A, T* IP65	A, B, K	HART	A, B, C, D	...081025	XA446F

Control Drawings

Correlation of Control Drawings (ZD) to the instrument:

Instrument	Certificate	Explosion protection	Output	Communication	Housing	ZD
FMR250	S	FM IS	A, B, K	HART	A, B	ZD168F/00/en
			A, B	HART	D	ZD168F/00/en
			C, D, L	PROFIBUS PA	A, B	in preparation
			C, D	PROFIBUS PA	D	in preparation
	T	FM XP	A, B, K C, D, L	HART PROFIBUS PA	C	ZD169F/00/en
	U	CSA IS	A, B, K	HART	A, B	ZD170F/00/en
			A, B	HART	D	ZD170F/00/en
			C, D, L	PROFIBUS PA	A, B	in preparation
			C, D	PROFIBUS PA	D	in preparation
	V	CSA XP	A, B, K C, D, L	HART PROFIBUS PA	C	ZD171F/00/en

10.1.9 Supplementary Documentation

Supplementary Documentation

- Technical Information (TI390F/00/en)
- Operating Instructions "Description of instrument functions" (BA291F/00/en)

11 Appendix

11.1 Operating menu HART

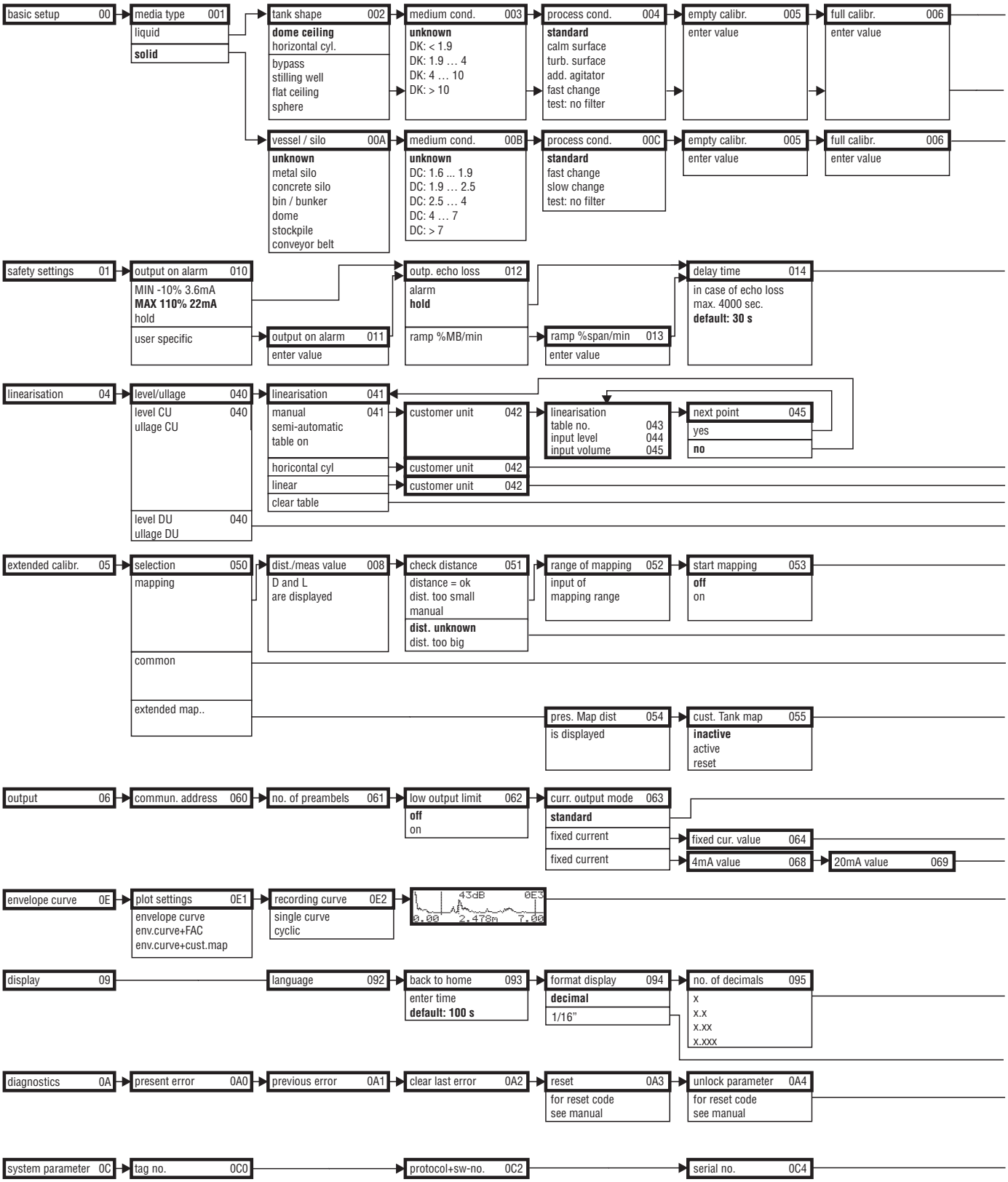

Note! The default values of the parameters are typed in boldface.

L00-FMR250xx-19-00-01-en-036

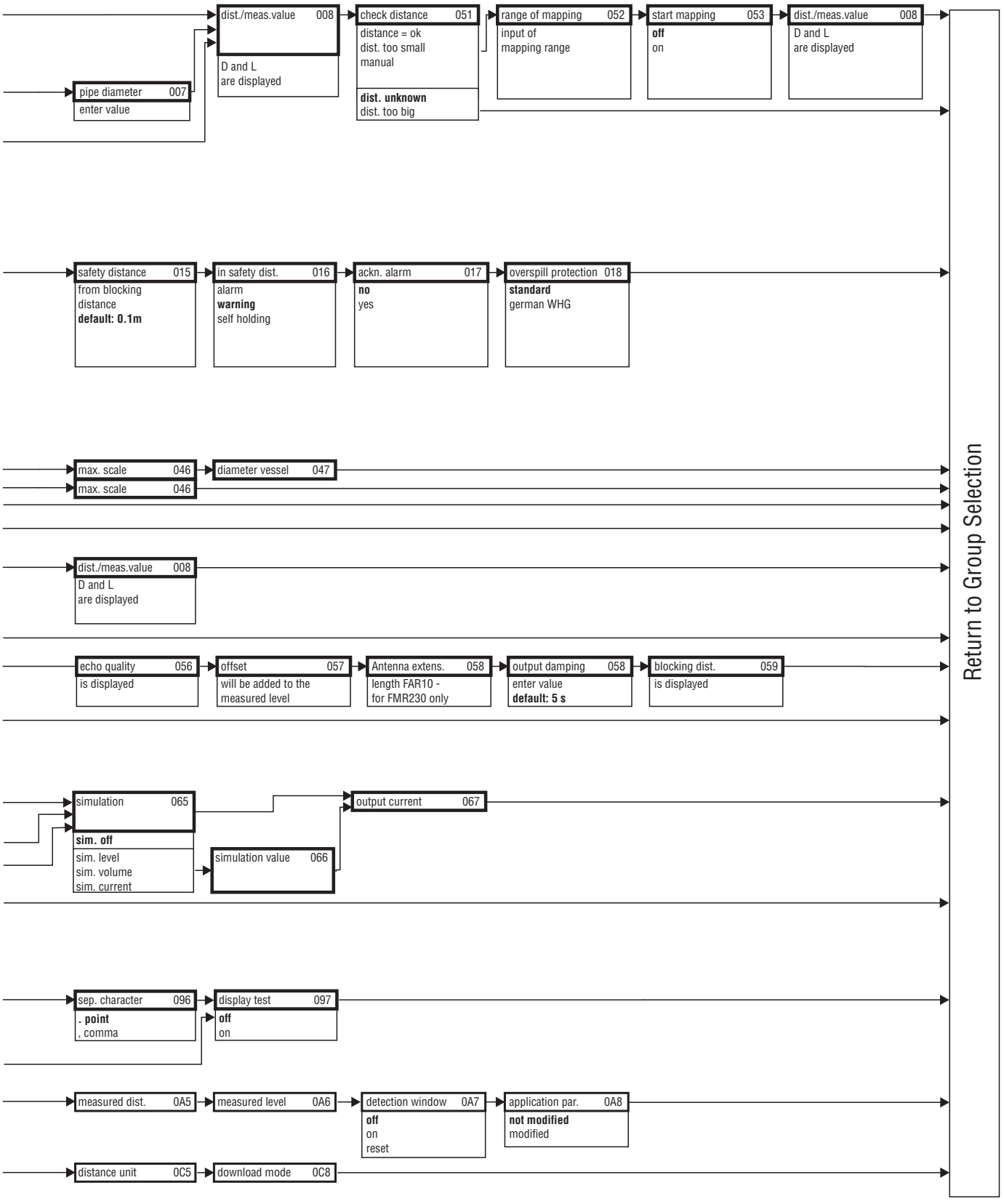

L00-FMR250xx-19-00-02-en-036

11.2 Description of functions



Note!
A detailed description of the function groups, functions and parameters is given in the documentation BA291F/00/en "Description of the instrument functions of the Micropilot M" on the enclosed CD-ROM.

11.3 Function and system design

11.3.1 Function (Measuring principle)

The Micropilot is a "downward-looking" measuring system, operating based on the time-of-flight method. It measures the distance from the reference point (process connection) to the product surface. Radar impulses are emitted by an antenna, reflected off the product surface and received again by the radar system.

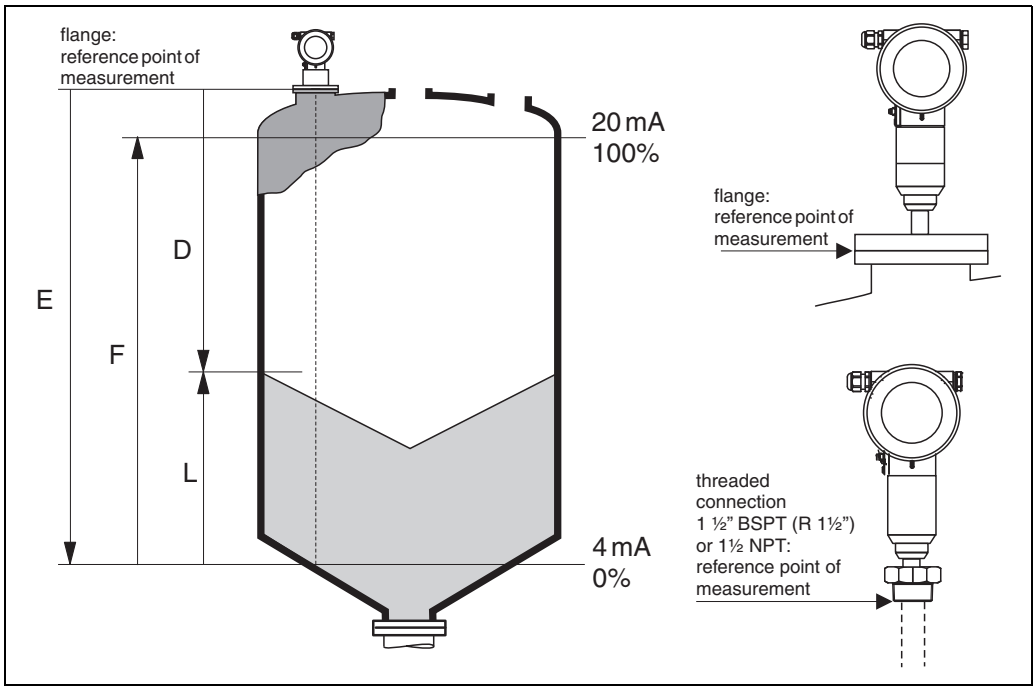

Input

The reflected radar impulses are received by the antenna and transmitted into the electronics. A microprocessor evaluates the signal and identifies the level echo caused by the reflection of the radar impulse at the product surface. The unambiguous signal identification is accomplished by the PulseMaster® software, based on many years of experience with time-of-flight technology.
The distance D to the product surface is proportional to the time of flight t of the impulse:

$D = c \cdot t/2$,
with c being the speed of light.

Based on the known empty distance E, the level L is calculated:

$L = E - D$

Refer to the above figure for the reference point for "E".

The Micropilot is equipped with functions to suppress interference echoes. The user can activate these functions. They ensure that interference echoes (i.e. from internals and struts seams) are not interpreted as level echo.

Output

The Micropilot is commissioned by entering an empty distance E (=zero), a full distance F (=span) and an application parameter. The application parameter automatically adapts the instrument to the process cond.. The data points “E” and “F” correspond with 4mA and 20mA for instruments with current output. They correspond with 0 % and
100 % for digital outputs and the display module.
A linearization with max. 32 points, based on a table entered either manually or semi-automatically, can be activated locally or remotely. This function provides a measurement in engineering units and a linear output signal for spheres, horizontal cylindrical tanks and vessels with conical outlet.

11.3.2 Equipment architecture

Stand-alone

The instrument provides a 4…20 mA output with HART protocol.

4…20 mA output with HART protocol

The complete measuring system consists of:

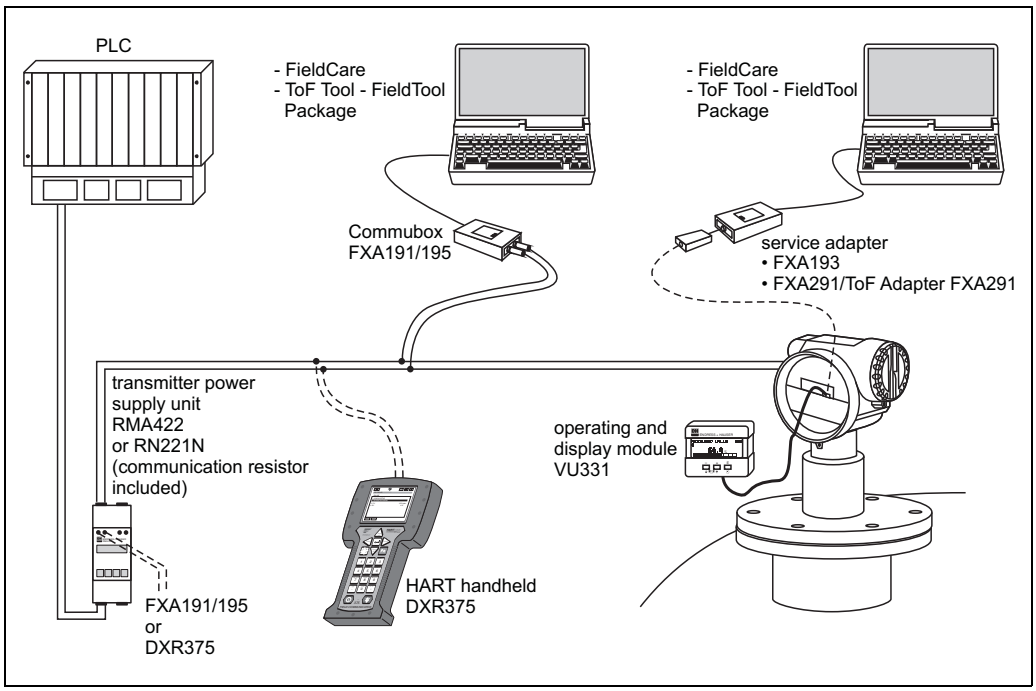

If the HART communication resistor is not built into the supply unit, it is necessary to insert a communication resistor of 250 Ω into the 2-wire line.

On-site operation

- with display and operating module VU331,
- with a Personal Computer, FXA193 and the operating software "ToF Tool – FieldTool Package" respectively "FieldCare".
  The ToF Tool is a graphical operating software for instruments from Endress+Hauser that operate based on the time-of-flight principle (radar, ultrasonic, guided micro-impulse). It assists with commissioning, securing data, signal analysis and documentation of the measuring point.

Remote operation

- with HART handheld DXR375,
- with a Personal Computer, Commubox FXA191/195 and the operating software "ToF Tool – FieldTool Package" respectively "FieldCare".

11.3.3 Patents

This product may be protected by at least one of the following patents.
Further patents are pending.

- US 5,387,918 ≙ EP 0 535 196
- US 5,689,265 ≙ EP 0 626 063
- US 5,659,321
- US 5,614,911 ≙ EP 0 670 048
- US 5,594,449 ≙ EP 0 676 037
- US 6,047,598
- US 5,880,698
- US 5,926,152
- US 5,969,666
- US 5,948,979
- US 6,054,946
- US 6,087,978
- US 6,014,100

Index

A
accessories 70
air purge 27
alarm 43
application errors in liquids 76
application errors in solids 78

B
basic setup 48, 50, 65
bypass 58

C
CE mark 11
commissioning 47
Commubox 33, 72
Commuwin II 33
connecting 31
connection 33–34

D
declaration of conformity 11
declaration of contamination 88
degree of protection 34
designated use 6
dielectric constant 52, 54
dimensions 13
display 38
disposal 88
distance 48, 58–59
DXR375 33

E
echo mapping 60
echo quality 80–81
empty calibration 48, 56, 66
engineering hints 18
envelope curve 62, 67
equipotential bonding 34
error messages 43
Ex approval 92
exterior cleaning 69

F
F12 housing 29, 31
F23 housing 29, 31
FHX40 71
full calibration 48, 57, 66
function 97
function groups 36
functions 36
FXA191 33
FXA193 33

H
handheld unit DXR375 44
HART 31, 33, 44

I
installation 12
installation in stilling well 12
installation in vessel 12, 22
interference echo 80
interference echoes 59

K
key assignment 39

L
level 48
lock 40–41

M
maintenance 69
mapping 59–60, 67
maximum measured error 90
Measurement in a plastic tank 19
measuring principle 97
media group 54
media type 65
Mediengruppe 21
medium property 52, 54, 66

N
nameplate 8
notes on safety conventions and symbols 7

O
operating menu 36
operation 35, 40
operation menu 35
operational safety 6
optimisation 80
ordering structure 9
orientation 12, 80

P
pipe diameter 58
process conditions 53, 55

R
repairs 69
repairs to Ex-approved devices 69
replacement 69
replacing seals 69
Reset 42
return 88
RF approvals 91
RMA422 33
RN221N 33

S
safety distance 48
safety instructions 6
Service Interface FXA291 70–71

software history 88
spare parts 82
stilling well 58
system error messages 74

T

T12 housing 30–31
tank shape 50–51
technical data 89
terminal compartment 31
ToF Tool 33, 65
top target positioner 27
trouble-shooting 73
trouble-shooting instructions 73
turn housing 12, 28

U

unlock parameter 40–41

V

vessel / silo 54, 66
Vessel installations 18
VU331 . . . . . 50, 62

W

warning 43
weather protection cover 70
Wetterschutzhaube 18
wiring 29

Endress+Hauser

People for Process Automation

www.endress.com/worldwide

Endress+Hauser

People for Process Automation

BA284F/00/EN/05.09
71094056
CCS/FM+SGML 6.0

71094056