

Low voltage Roller table motors

Catalog | June 2025

Discover

With expertise, and a comprehensive portfolio of products and life-cycle services, we help value-minded industrial customers improve their energy efficiency and productivity.



Low voltage Roller table motors

Sizes 132 to 450

01 ABB ROLLER TABLE MOTORS

05 GENERAL
06 ROLLER TABLE DRIVES
09 ORDERING INFORMATION
10 RATING PLATES

02 TECHNICAL DATA

11 Roller table motors, 400 V 50 Hz
12 Roller table motors, 400 V 23 Hz
13 VARIANT CODES

03 MECHANICAL DESIGN

15 Drain holes
16 Lifting lugs
17 Heating elements
18 Bearings
21 Radial forces
22 Axial forces
23 TERMINAL BOX
24 Standard delivery 400 V
25 Terminal box dimensions
26 Cable glands
27 DIMENSION DRAWINGS
27 Roller table motors, sizes 132
28 Roller table motors, sizes 160 - 250
29 Roller table motors, sizes 280 - 450

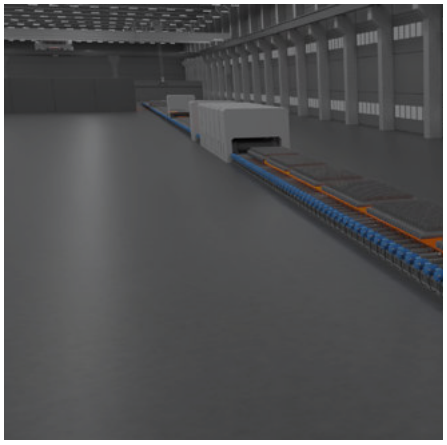

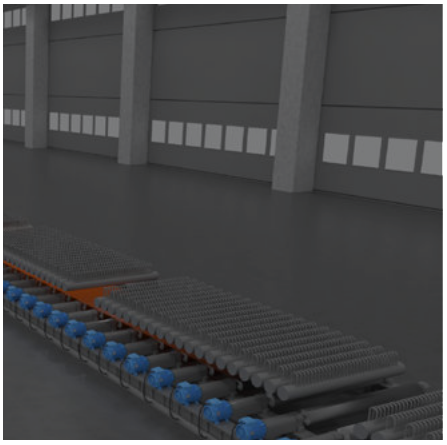

04 MOTORS IN BRIEF

30 Sizes 132 - 250
31 Sizes 280 - 450

05 MOTOR CONSTRUCTION

06 ABB

33 ABB ACCESS
34 TOTAL PRODUCT OFFERING
35 ABB'S PORTFOLIO OF DRIVES

ABB ROLLER TABLE MOTORS

Where robust meets reliable

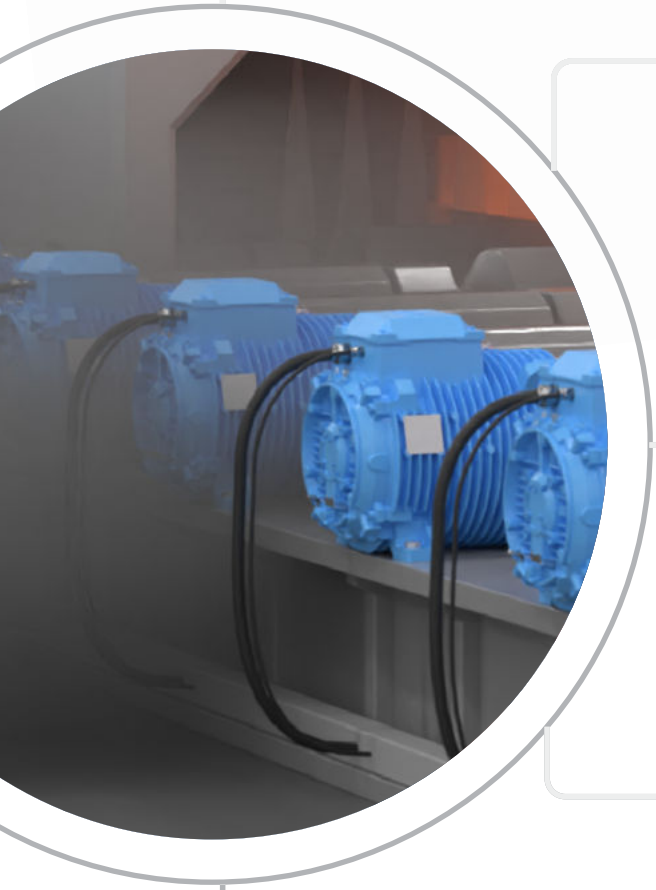

Wide range
ABB Roller table motors are available with a wide range from shaft heights 132 to 450.

Robust design
ABB Roller table motors are extremely rugged, with a strong housing that protects against impacts and falling debris.

Customizable
A broad range of options, accessories, and connection solutions are available.

Decades of expertise
With more than three decades of experience in supplying roller table motors, we have extensive application know-how, enabling us to tailor motors for a perfect match with your process.

Long lifetime, even under the toughest conditions
The motors are made for VSD operation, and their design lifetime is up to 20 years.

General

ABB Roller table motors are squirrel cage motors which are specially designed for use with frequency converters. Robust in construction, the motors are fully sealed to withstand the tough conditions in rolling mills.

The motors are low speed units intended for direct connection to rollers. The pole number and frequency can be selected, avoiding the need for gearboxes and therefore saving on maintenance costs and increasing the overall efficiency of the drive.

Assembly dimensions and shaft heights are in accordance with IEC 60072-1. The normal motor mounting position is B3/IM1001. Flange mounting (IM B5/IM3001) is possible for shaft heights 132 to 250 on request.

The enclosure of the motors is protected to IP55. Higher degrees of protection, up to IP66, are also available. If required, the stator frame of M3RP motors can be pressurized with air to prevent any ingress of water or dust. ABB offers roller table motors in sizes 132 to 450.

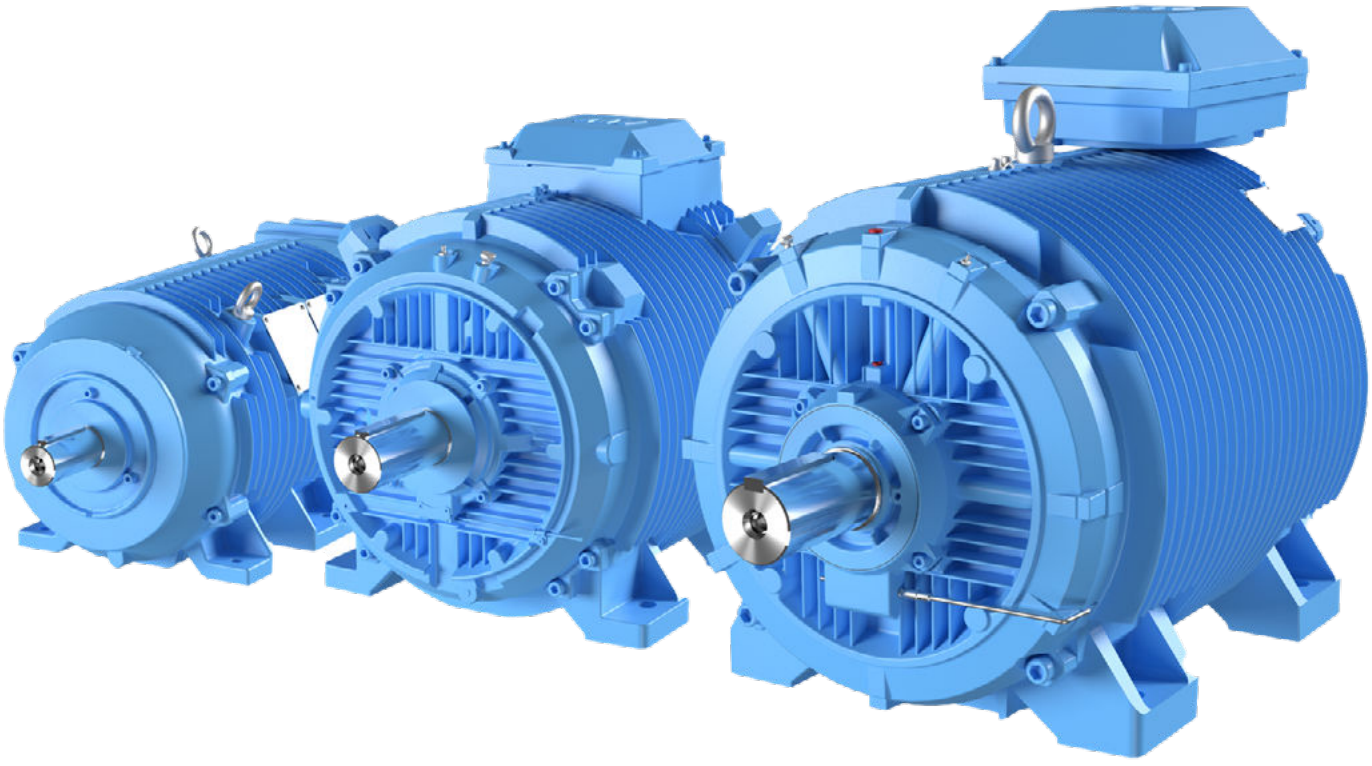

Roller table drives

01 A single frequency converter consists of 1) rectifier, 2) DC link, 3) inverter unit, and 4) electric supply

02 A Multidrives system, which has 1) separate supply section, 2) common DC bus, 3) drive sections, and 4) electric supply (normally from transformer)

03 Principle diagram for a common DC bus

Roller tables incorporate a number of motors, the speed of which can be steplessly controlled by one or more frequency converters.

The rolling mill environment places severe stress on roller table drives. As plates and billets travel along the roller table, the motors driving the rollers are subjected to high torque loads. At the same time, the reliability of the drive system is constantly threatened by the high ambient temperature, humidity, and the risk that fine dust particles from the process could infiltrate the motors.

To meet these rigorous demands, ABB has developed its Roller Table AC Drive System, which comprises the new, robust M3RP induction motors, together with ABB frequency converters.

The totally enclosed construction of the M3RP induction motors renders them immune to the ingress of moisture and dust. The power factor of ABB frequency converters with IGBT supply units is 1.0 under any load conditions. Together the motor and frequency converter provide a competitive solution, with high availability and minimal maintenance costs.

Frequency converters

A single AC drive system typically consists of an input transformer or an electric supply, frequency converter, AC motor, and load machine. The single frequency converter consists of a rectifier, DC link and inverter.

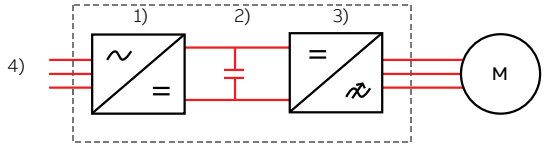

01

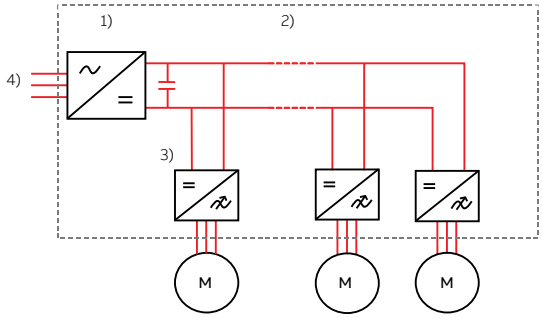

02

In a multidrive system there is a common rectifier unit, and the inverters are directly connected to a common DC link. There can be dozens of inverters connected to the common DC link, and the dimensioning of the rectifier unit is based on the simultaneous power requirement from the network.

The rectifier converts the mains supply voltage to a constant intermediate DC voltage, which is then inverted back to AC voltage by the inverter.

ABB frequency converters feature Direct Torque Control (DTC), a technology developed by ABB. DTC employs advanced motor theory to calculate the motor torque directly, without modulation and feedback - i.e. no pulse encoder is required. The controlling variables are motor magnetizing flux and motor torque. This technique is so effective that the torque response of DTC controlled drives is typically faster than that of any other industrial drives. At the same time DTC achieves dynamic speed accuracy better than any open loop AC drive, and comparable to DC drives using feedback. This excellent control performance without the use of pulse encoders is very important for roller table applications.

Common DC bus of ACS880 multidrives

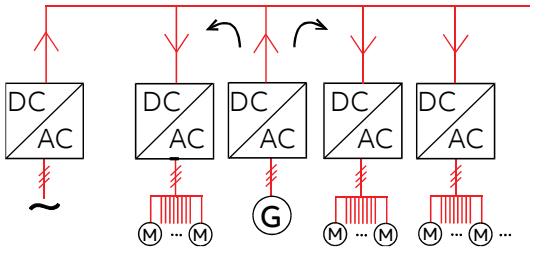

03

ACS880 multidrives are based on a common DC bus arrangement, with a single power entry and common braking resources for several drives. There are a number of alternatives on the supply side, ranging from simple diode supply units up to highly sophisticated IGBT supply units. The construction of a multidrive simplifies the total installation and provides many advantages.

In multimotor applications, the common DC bus and single power line connection for a number of drives represents a very efficient solution when compared with separate, single small converters. Each inverter is connected to the DC bus and the motors are connected to the inverter outputs. All the inverters are capable of 4-quadrant operation.

—
04 ACS800 multidrives

When an inverter is used to brake a motor, the energy from the (regenerative) braking operation is sent back to the DC bus and can be used by other motoring sections. This ability to recirculate power produces substantial energy savings.

Benefits of ABB's multidrives frequency converter

- reduced line currents and simple braking arrangements
- energy circulation over the common DC busbar, which can be used for motor-to-motor braking without the need of for a braking chopper or regenerative supply unit
- reduced component count and increased reliability when a common supply and DC link are used
- reduced cabling due to the single power entry for several drives
- savings in cabling, installation and maintenance costs (the supply and inverter modules, for example, are fitted with plug connections for fast and easy module changing)
- High packing density, for example 16 units of frame size R2i inverters can be installed into a one meter wide cabinet.
- overall safety and control functions made possible by the common supply.



—
04

Regenerative IGBT supply unit

An ACS880 multidrive equipped with an IGBT supply unit (ISU) has a fundamental power factor of 1.0 under any load conditions. This means that the converter takes only active power from the mains – i.e. supplementary tariffs for reactive power consumption do not need to be paid. By comparison, a thyristor supply has a power factor between 0.97 and 0.99 in motoring mode and 0.88 or higher in regenerative mode.

The unity power factor of ACS880 multidrives with IGBT supply unit means that there is no need to purchase power factor correction equipment. Low reactive power consumption also means that smaller cables and lower rated transformers can be used.

The total current distortion (THDI) of the IGBT supply unit is less than 3 %, which is much less than with a 12-pulse converter.

The IGBT supply provides a constant DC voltage which is very stable even if there are variations in the supply voltage or load. The constant DC voltage guarantees stable process conditions, which is a very important factor in constant torque applications. By contrast, the DC voltage from a thyristor supply, for example, varies according to the supply voltage and load.

An IGBT supply and constant DC voltage ensure the full nominal voltage is available to the motor. With other types of rectifier, which cannot maintain a constant DC voltage, the motor has to be over dimensioned to allow for the lower output voltage.

A regenerative supply enables the roller table motors to quickly reverse direction. This is essential to accommodate the reversing duty cycle of the table, which involves repetitive motor braking. Regenerative braking of the whole system may also be needed during controlled or emergency stops.

—
05 Parallel connected modules

Built-in redundancy

The inverter section of ACS880 multidrives consists of threephase modules. The modules – each of which is a complete three-phase inverter – are connected in parallel according to the motor power requirement. Parallel connection of the modules provides built-in redundancy, enabling the system to run with a partial load if one module fails. It also makes for higher drive availability and greater process uptime. These three-phase inverter modules are unique to ABB's ACS880 and multidrive modules.

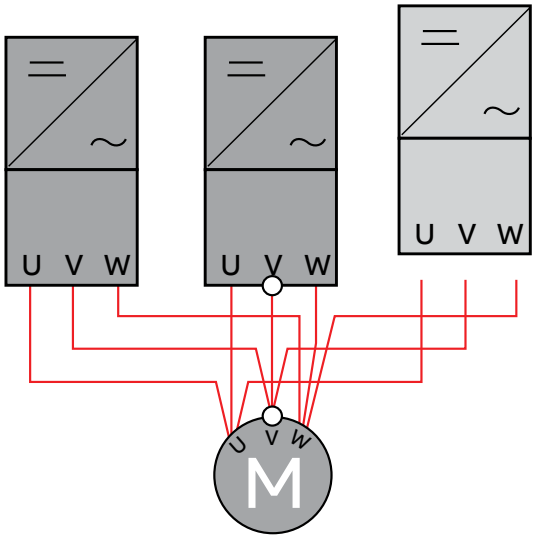

—
05

All-round optimum solution

When selecting the right drive solution for roller tables, it is important to take into consideration not only the direct investment costs but also the operating costs. Multidrives deliver savings in investment costs, as it reduces cable work by eliminating the need for supply cabling to individual converters. In addition, the multidrive with its common supply section and compact modular construction helps to save space – a significant factor as space in the electrical room is often limited.

ABB drives with their direct torque control (DTC) feature excellent dynamic performance, which is essential for roller table applications. Even without a tachometer, DTC delivers good motor speed accuracy, superb torque control and full torque at zero speed; this results in less stress on machinery, less process downtime and lower investment costs. Finally, the low harmonics and unity power factor of the regenerative IGBT supply unit enable fast reversing of the roller table and produce savings in operating costs.

For more information on frequency converters, see web site www.abb.com/motors&drives.

Ordering information

Explanation of the product code

Motor type	Motor size	Product code	Mounting arrangement code, Voltage and frequency code, Generation code	Variant codes
M3RP	280MB	3GRP 283 326 - ADG		003 etc.
		1 2 3 4 5 6 7	8 9 10 11 12 13 14	

When placing an order, please state the following minimum data in the order, as in the example.

The product code of the motor is composed in accordance with the following example.

Positions 1 to 4	
3GRP:	Totally enclosed fan cooled motor with cast iron frame squirrel cage

Positions 5 and 6	
IEC-frame	
13:	132
16:	160
18:	180
20:	200
22:	225
25:	250
28:	280
31:	315
40:	400
45:	450

Position 7	
Speed (Pole pairs)	
2:	4 poles
3:	6 poles
4:	8 poles
5:	10 poles
6:	12 poles

Example	
Motor type	M3RP 280 MB
Pole number	6
Mounting arrangement (IM-code)	IM B3 (IM 1001)
Rated output	22 kW
Product code	3GRP283326-G
Variant codes if needed	

Positions 8 to 10
Serial number

Position 11
- (Dash)

Position 12	
Mounting arrangement	
A:	Foot-mounted, top-mounted terminal box
B:	Flange-mounted, large flange
C:	Foot- and flange-mounted, terminal box top-mounted

Position 13
Voltage and frequency
See table below

Position 14
Generation code
G
The product code must be, if needed, followed by variant codes.

Code letters for supplementing the product code - single speed motors Code letter for voltage

Motor size	A	S	B	D	H	E	T	U	X
132-450	220 V	230 V	380 V	400 V	415 V	500 V	660 V	690 V	Other rated voltage, connection or frequency, 690 V maximum

Rating plates

—
01 Rating plate

ABB Oy, IEC LV Motors
Strömbergin puistotie 5 A
65320 Vaasa, Finland

IEC60034-1

3~ Motor M3RP 200LC 12 IMB3/IM1001 2025

2587668-11
No. 3G1F2516053243 Ins. cl. F IP 55

V	Hz	kW	r/min	A	cos φ	Duty
660 Y	23	2	225	5	0.46	S9

SPEC INSUL VC405
Product code 3GRP206532-ADG +VC

6312/C3 6310/C3 285 kg

ABB Oy, IEC LV Motors
Strömbergin puistotie 5 A
65320 Vaasa, Finland

IEC60034-1

3~ Motor M3RP 200LC 12 IMB3/IM1001 2025

2587668-11
No. 3G1F2516053244 Ins. cl. F IP 55

V	Hz	kW	r/min	A	cos φ	Duty
660 Y	23	2	225	5	0.46	S9

SPEC INSUL VC405
Product code 3GRP206532-ADG +VC

6312/C3 6310/C3 285 kg

CONVERTER SUPPLY

3~ Motor M3RP 200LC 12 IMB3/IM1001
No. 3G1F2516053244
Frequency converter type PWM
Min. switching frequency 3kHz FWP 660VY 23Hz

V	Hz	kW	r/min	A	Nm	Duty
660 Y	23	2	225	5	85	S9

Constant torque

CONVERTER SUPPLY

3~ Motor M3RP 200LC 12 IMB3/IM1001
No. 3G1F2516053243
Frequency converter type PWM
Min. switching frequency 3kHz FWP 660VY 23Hz

V	Hz	kW	r/min	A	Nm	Duty
660 Y	23	2	225	5	85	S9

Constant torque

REGREASING INSTRUCTIONS

Bearings 6322/C3 6316/C3VL0241
Amount of grease 70 g 40 g
Greased in factory with MOBILGREASE XHP 222

Mounting	AMB. temp.	1800 r/min	1500 r/min	1000 r/min	0-900 r/min
Hor	25	4000	5600	9600	10700
Hor	40	2000	2800	4800	5400
Vert	25	2000	2800	4800	5400
Vert	40	1000	1400	2400	2700

Regreasing interval in duty hours
The following or similar high performance grease can be used:
MOBILGREASE XHP 222

Do not exceed the motor max. speed 2172999-1

See respective "Motor manual"

01

TECHNICAL DATA

Roller table motors, 400 V 50 Hz

IP 55 - IC 410 - Insulation class F, temperature rise class B

Output kW	Motor type	Product code	Speed r/min	Torque			Current			Power factor			Inertia	Weight kg
				T_{rms} Nm	T_{max} Nm	T_{acc} Nm	I_0 A	I_n A	I_{acc} A	cos j_0	cos j_n	cos j_{acc}		
1500 r/min = 4 poles			**400 V 50 Hz**											
5,5	M3RP 132SMC 4	3GRP132238-••G	1461	36	105	78	4	10	23	0,04	0,84	0,83	0,0488	101
7	M3RP 160LD 4	3GRP162548-••G	1489	45	275	205	10	16	67	0,06	0,63	0,77	0,15	245

Output kW	Motor type	Product code	Speed r/min	Torque			Current			Power factor			Inertia	Weight kg
				T_{rms} Nm	T_{max} Nm	T_{acc} Nm	I_0 A	I_n A	I_{acc} A	cos j_0	cos j_n	cos j_{acc}		
1000 r/min = 6 poles			**400 V 50 Hz**											
7	M3RP 180LA 6	3GRP183516-••G	980	68	225	160	9	15	32	0,06	0,76	0,83	0,25	219
10	M3RP 200LA 6	3GRP203516-••G	985	96	380	285	6	18	57	0,08	0,88	0,87	0,43	245
11	M3RP 200LB 6	3GRP203526-••G	987	106	520	390	8	20	78	0,06	0,88	0,87	0,52	270
12,5	M3RP 225MB 6	3GRP223326-••G	989	120	640	480	10	23	97	0,07	0,86	0,85	0,66	315
15	M3RP 225MC 6	3GRP223336-••G	990	145	850	635	13	27	136	0,07	0,85	0,83	0,78	340
18	M3RP 250MB 6	3GRP253326-••G	991	173	1100	825	16	33	164	0,06	0,84	0,85	1,59	455
22	M3RP 280MB 6	3GRP283326-••G	993	210	1320	990	18	40	195	0,06	0,85	0,84	2,6	620
30	M3RP 280MC 6	3GRP283336-••G	993	288	1530	1145	20	52	224	0,06	0,88	0,84	3,0	690
37	M3RP 315LA 6	3GRP313516-••G	994	355	2020	1515	28	65	300	0,05	0,86	0,84	5,1	870
45	M3RP 315LB 6	3GRP313526-••G	994	430	2630	1970	36	80	380	0,05	0,86	0,84	5,9	950
55	M3RP 315LC 6	3GRP313536-••G	994	525	3220	2415	42	97	467	0,05	0,86	0,84	6,9	1060

Output kW	Motor type	Product code	Speed r/min	Torque			Current			Power factor			Inertia	Weight kg
				T_{rms} Nm	T_{max} Nm	T_{acc} Nm	I_0 A	I_n A	I_{acc} A	cos j_0	cos j_n	cos j_{acc}		
750 r/min = 8 poles			**400 V 50 Hz**											
5,5	M3RP 180LA 8	3GRP184514-••G	728	72	216	160	6	12	27	0,08	0,75	0,80	0,25	219
8	M3RP 200LA 8	3GRP204514-••G	740	103	420	315	8	16	49	0,07	0,82	0,85	0,43	245
9	M3RP 200LB 8	3GRP204524-••G	740	116	560	420	10	18	66	0,06	0,79	0,84	0,52	270
10	M3RP 225MB 8	3GRP224324-••G	741	128	610	455	13	21	70	0,06	0,75	0,84	0,66	315
12,5	M3RP 225MC 8	3GRP224334-••G	742	161	800	600	17	27	93	0,05	0,74	0,83	0,78	340
15	M3RP 250MB 8	3GRP254324-••G	742	192	1110	830	20	32	128	0,05	0,74	0,83	1,59	455
18	M3RP 280MB 8	3GRP284324-••G	745	230	1230	920	22	37	138	0,05	0,75	0,83	2,6	620
22	M3RP 280MC 8	3GRP284334-••G	746	282	1570	1170	28	46	174	0,05	0,75	0,82	3,0	690
30	M3RP 315LA 8	3GRP314514-••G	746	384	2270	1700	42	64	254	0,04	0,72	0,82	5,1	870
37	M3RP 315LB 8	3GRP314524-••G	745	470	2540	1900	45	76	283	0,04	0,75	0,82	5,9	950
45	M3RP 315LC 8	3GRP314534-••G	745	576	3160	2370	55	92	357	0,04	0,74	0,82	6,9	1060

The two bullets in the product code indicate the choice of mounting arrangement, voltage and frequency (see the ordering information page).



Technical data

Roller table motors, 400 V 23 Hz

IP 55 - IC 410 - Insulation class F, temperature rise class B

Output kW	Motor type	Product code	Speed r/min	Torque			Current			Power factor			Inertia	Weight kg
				T_{rms} Nm	T_{max} Nm	T_{acc} Nm	I_0 A	I_n A	I_{acc} A	cos j_0	cos j_n	cos j_{acc}		
345 r/min = 8 poles			**400 V 23 Hz**											
3,3	M3RP 200LA 8	3GRP204512-••G	338	93	420	315	6	8	24	0,08	0,72	0,90	0,43	245
4	M3RP 200LB 8	3GRP204522-••G	338	113	580	430	7	9	33	0,07	0,72	0,89	0,52	270
4,5	M3RP 200LC 8	3GRP204532-••G	338	127	630	470	7	10	35	0,07	0,75	0,88	0,58	285
5	M3RP 225MC 8	3GRP224332-••G	338	141	670	500	8	11	37	0,06	0,72	0,87	0,82	325
6	M3RP 225MD 8	3GRP224342-••G	339	169	1020	765	12	15	57	0,05	0,64	0,86	0,87	360
11	M3RP 250MC 8	3GRP254332-••G	339	310	1570	1175	16	24	88	0,05	0,73	0,85	1,67	470
15	M3RP 280MB 8	3GRP284322-••G	340	421	1920	1440	22	33	107	0,05	0,73	0,84	2,6	620
18,5	M3RP 280MC 8	3GRP284332-••G	340	520	2490	1865	26	40	137	0,04	0,74	0,83	3,0	690
25	M3RP 315LA 8	3GRP314512-••G	340	702	3140	2350	33	53	170	0,04	0,75	0,84	5,1	870
30	M3RP 315LB 8	3GRP314522-••G	340	840	3770	2820	37	62	203	0,04	0,76	0,83	5,9	950
35	M3RP 315LC 8	3GRP314532-••G	341	980	5490	4115	55	79	299	0,03	0,69	0,82	6,9	1060
40	M3RP 355SA 8	3GRP354112-••G	342	1110	7320	5485	78	101	402	0,03	0,61	0,79	10	1550
50	M3RP 355SB 8	3GRP354122-••G	342	1390	8550	6410	86	118	461	0,03	0,65	0,80	12	1750
60	M3RP 355LA 8	3GRP354512-••G	342	1670	11840	8880	118	153	660	0,03	0,61	0,78	14	2000
85	M3RP 400MA 8	3GRP404312-••G	343	2360	13600	10200	161	214	701	0,03	0,61	0,81	22	2500
100	M3RP 400LA 8	3GRP404512-••G	343	2780	16400	12300	193	254	846	0,03	0,60	0,81	26	2850
120	M3RP 450LA 8	3GRP454512-••G	342	3350	17500	13100	173	265	910	0,03	0,69	0,81	26	3400
132	M3RP 450LB 8	3GRP454522-••G	342	3686	20000	15000	195	295	1030	0,03	0,68	0,81	29	3650
150	M3RP 450LC 8	3GRP454532-••G	342	4188	24500	18300	240	345	1260	0,03	0,66	0,81	35	4000
165 [1)]	M3RP 450LD 8	3GRP454542-••G	343	4594	30500	22800	285	395	1570	0,03	0,63	0,81	41	4450

[1)] Temperature rise class F.

The two bullets in the product code indicate the choice of mounting arrangement, voltage and frequency (see the ordering information page).

Variant codes

Roller table motors

Variant codes specify additional options and features to the standard motor. The desired features are listed as three-digit variant codes in the motor order. Note also that there are variants that cannot be used together.

Code/Variants		Motor size										
		132	160	180	200	225	250	280	315	355	400	450
Administration												
648	Rating plate in special language	●	●	●	●	●	●	●	●	●	●	●
Bearings and Lubrication												
037	Roller bearing at D-end.	●	●	●	●	●	●	●	●	●	●	●
043	SPM compatible nipples for vibration measurement	●	○	○	○	○	○	○	○	○	○	○
Branch standard designs												
209	Non-standard voltage or frequency, (special winding).	●	●	●	●	●	●	●	●	●	●	●
Documentation												
536	Photos of manufactured motors	●	●	●	●	●	●	●	●	●	●	●
Insulation system												
014	Winding insulation class H.	●	●	●	●	●	●	●	●	●	●	●
405	Special winding insulation for frequency converter supply.	●	●	●	●	●	●	●	●	●	●	●
Mounting arrangements												
009	IM 2001 foot/flange mounted, IEC flange, from IM 1001 (B35 from B3).	●	●	●	●	●	●	●	●	●	●	●
Painting												
114	Special paint color, standard grade	●	●	●	●	●	●	●	●	●	●	●
Protection												
158	Degree of protection IP65.	●	●	●	●	●	●	●	●	●	●	●
250	Degree of protection IP66	●	●	●	●	●	●	●	●	●	●	●
403	Degree of protection IP56.	●	●	●	●	●	●	●	●	●	●	●
Rating & instruction plates												
163	Frequency converter rating plate. Rating data according to quotation.	●	●	●	●	●	●	●	●	●	●	●
Shaft & rotor												
070	Special shaft extension at D-End, standard shaft material	●	●	●	●	●	●	●	●	●	●	●
591	Special shaft extension according to customer specification.	●	●	●	●	●	●	●	●	●	●	●
Standards and Regulations												
208	Fulfilling Underwriters Laboratories (UL), listed requirements	●	●	●	●	●	●	●	●	●	●	●
586	Fulfilling UK Conformity Assessment (UKCA) requirements.	●	●	●	●	●	●	●	●	●	●	●
Stator winding temperature sensors												
122	Bimetal detectors, break type (NCC), (3 in series), 150 ºC, in stator winding	●	●	●	●	●	●	●	●	●	●	●
437	PTC - thermistors (3 in series), 170 ºC, in stator winding	●	●	●	●	●	●	●	●	●	●	●
441	PTC - thermistors (3 in series, 130 ºC & 3 in series, 150 ºC), in stator winding	●	●	●	●	●	●	●	●	●	●	●
445	Pt100 2-wire in stator winding, 1 per phase	●	●	●	●	●	●	●	●	●	●	●
592	Pt1000 2-wire in stator winding, 1 per phase	●	●	●	●	●	●	●	●	●	●	●
595	Pt1000 2-wire in stator winding, 2 per phase	●	●	●	●	●	●	●	●	●	●	●
596	Pt1000 3-wire in stator winding, 1 per phase	-	●	●	●	●	●	●	●	●	●	●
597	Pt1000 3-wire in stator winding, 2 per phase	-	●	●	●	●	●	●	●	●	●	●
Terminal box												
418	Separate terminal box for auxiliaries, standard material.	●	●	●	●	●	●	●	●	●	●	●
567	Separate terminal box material: cast Iron	-	-	-	-	-	-	●	●	●	●	●
Testing												
764	Test for one motor from specific delivery batch with ABB frequency converter available at ABB test field. ABB standard test procedure.	-	-	-	-	-	-	●	●	●	●	●
Variable speed drives												
182	Mounting of non-listed pulse tacho.	-	●	●	●	●	●	●	●	●	●	-
472	1024 pulse tacho (L&L 861007455-1024).	●	●	●	●	●	●	●	●	●	●	●
473	2048 pulse tacho (L&L 861007455-2048).	●	●	●	●	●	●	●	●	●	●	●
701	Insulated bearing at N-end.	-	●	●	●	●	●	●	○	○	○	○

○ = Included as standard | ● = Available as option | - = Not applicable

MECHANICAL DESIGN

The motors feature a number of mechanical solutions that have been designed for the extreme conditions found in rolling mills.

The standard shaft end is of cylindrical construction. Conical shaft ends, as well as double shaft extensions, are available on request.

Robust, die-cast aluminum squirrel cage rotors, which are highly wear-resistant, are used throughout the motor range. The rotor slot design is optimized for frequency converter applications.

The frames and bearing end shields are made of cast iron. Spheroidal graphite cast iron is used as standard in shaft heights 355-450, and is available on request for smaller shaft heights. All fixing screws and bolts are locked.

The motors are totally enclosed, frame cooled motors, with no external cooling fan, in accordance with IEC 60034-6, IC 410. The stator frames have crosswise vertical cooling ribs, allowing optimum heat flow away from the motor surface.

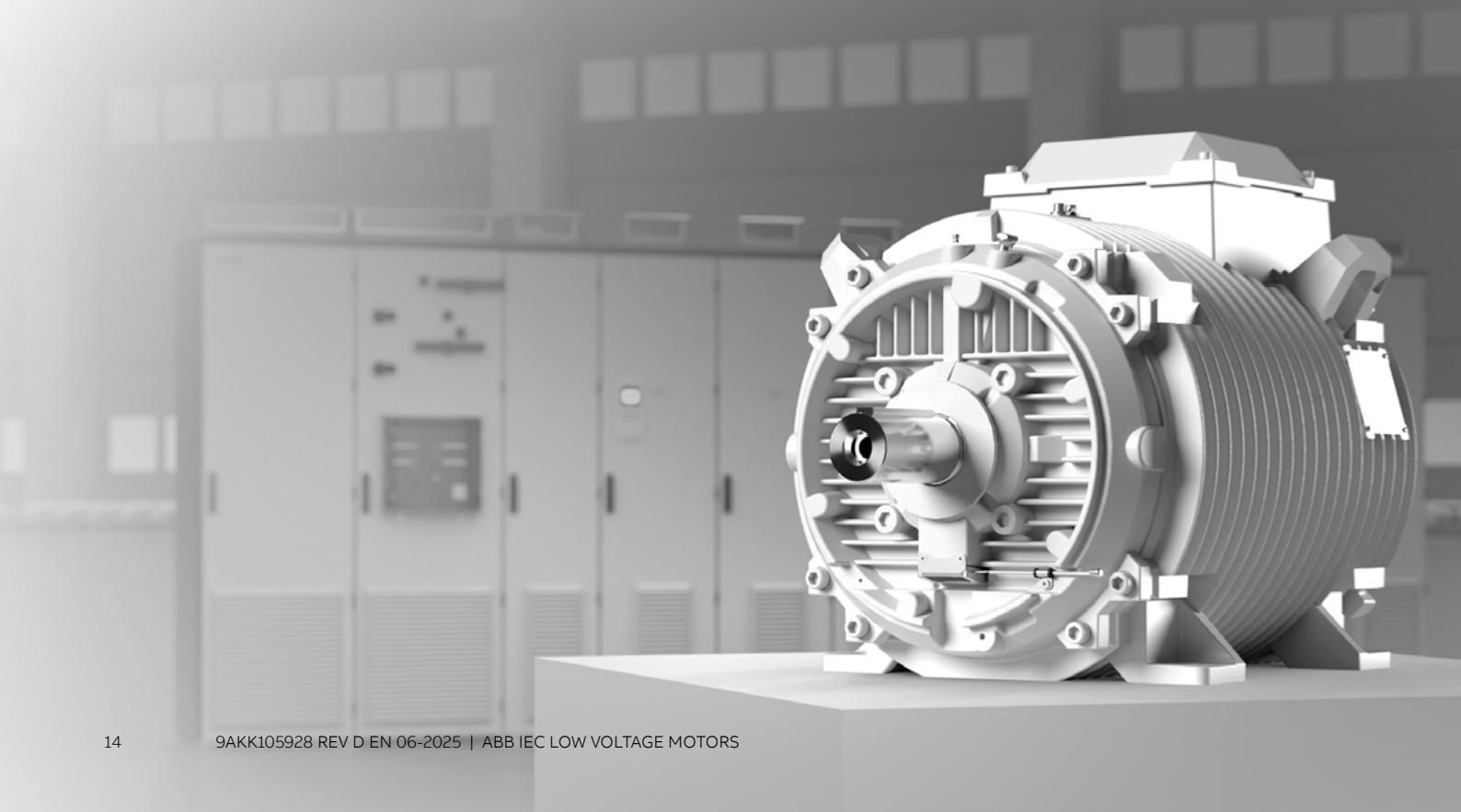

Mechanical design

Drain holes

All motors are provided with drain holes and plugs which, depending on the motor's mounting position, are located at the lowest point. The plugs are in the open position when the motors are delivered.

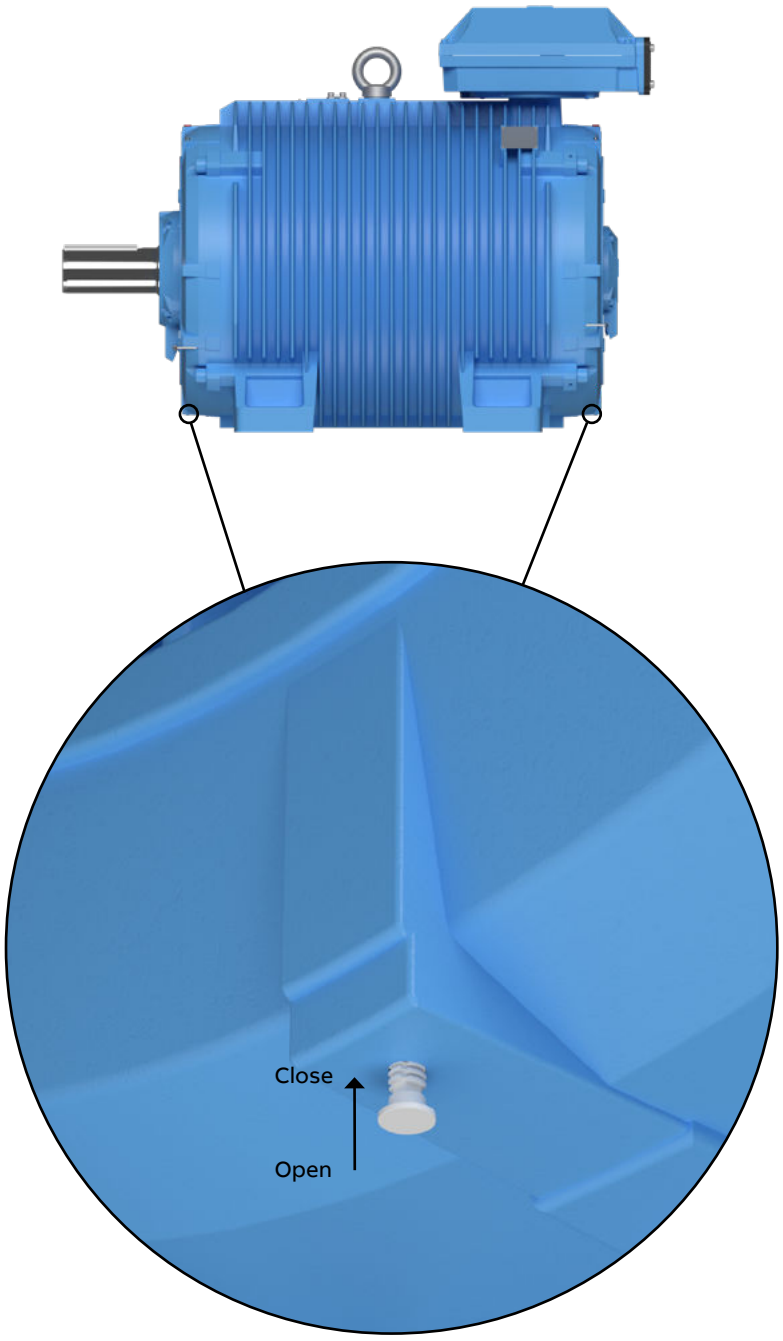

Mechanical design
Lifting lugs

The motors are provided as standard with lifting lugs according to the table below.

Motor size	Type of lugs	Foot mounted motors
132	Detachable eye bolt	2 pcs on top of motor diagonally, placed, size M8
160	Detachable eye bolt	2 pcs on top of motor diagonally, size M12
180	Detachable eye bolt	1 pcs close to terminal box on top, M12
200-250	Integrated in casting	2 pcs on top of motor diagonally placed
280, 315	Detachable eye bolt	1 pcs close to terminal box on top, size M24
355	Detachable eye bolt	1 pcs close to terminal box on top, size M30
400	Detachable eye bolt	1 pcs close to terminal box on top, size M30
450	Detachable eye bolt	1 pcs close to terminal box on top, size M42

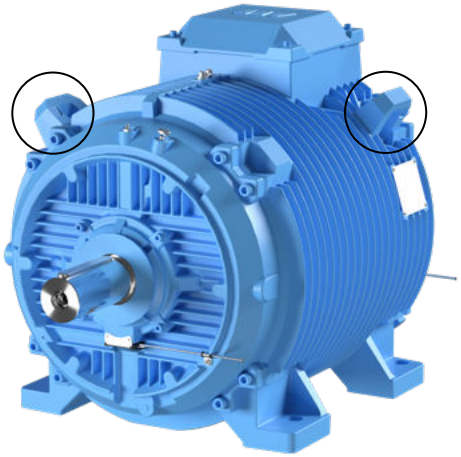



Mechanical design

Heating elements

Heating elements are installed into windings to keep them free of corrosion in humid conditions. The required power of heating elements is shown in the table.

Motor size	132	160	180	200	225	250
Power (W)	25	25	25	25	60	60

Motor size	280	315	355	400	450
Power (W)	60	2x60	2x60	2x60	2x100

Mechanical design
Bearings

Roller table motors are fitted with 63-series single row deep groove ball bearings, except for the shaft height 132, which is lubricated for life. Alternatively, a cylindrical roller bearing can be used at the D-end of the motor, if required.

The bearings are axially spring loaded, thus eliminating the bearing clearance. This improves bearing resistance to vibrations while allowing for normal thermal expansion. The D-end of the motor is equipped with a fixed bearing.

The motors are provided with regreasable bearings as standard, except for the shaft height 132, which is greased for life.

Motor sizes 315 to 450 have insulated bearings at N-end as standard.

Motor size	Product design code	Pole number	Standard design		Alternative designs
			Deep groove ball bearings		Roller bearings (037)
			Drive end	Non-drive end	Drive end
132	G	4-8	6308-2Z/C3	6308-2Z/C3	NU 308 ECP/C3
160	G	4-12	6309/C3	6309/C3	NU 309 ECP/C3
180	G	4-12	6310/C3	6309/C3	NU 310 ECP/C3
200	G	4-12	6312/C3	6310/C3	NU 312 ECP/C3
225	G	4-12	6313/C3	6312/C3	NU 313 ECP/C3
250	G	4-12	6315/C3	6313/C3	NU 315 ECP/C3
280	G	4-12	6316/C3	6316/C3	NU 316 ECP/C3
315	G	4-12	6319/C3	6316/C3 VL0241	NU 319 ECP/C3
355	G	4-12	6322/C3	6316/C3 VL0241	NU 322 ECP/C3
400	G	4-12	6324/C3	6319/C3 VL0241	NU 324 ECP/C3
450	G	4-12	6326M/C3	6322/C3 VL0241	NU 326 ECP/C3

Lubrication

Motors are provided with grease nipples so the motor can be lubricated while running. If the bearings cannot be lubricated while running, please follow the procedure as described in the manuals. For slowly rotating and/or highly loaded bearings, lithium complex (EP) greases are recommended.

A lubrication instruction plate is fitted to the motor frame, stating the type of grease and lubrication interval. The D-end bearing must be lubricated so that grease comes out of labyrinth channels and completely replaces the old grease.

Lubrication intervals

ABB follows the L_1-principle in defining lubrication interval. That means that 99 % of the motors make the interval time. The lubrication intervals can also be calculated according to the L_{10}-principle, which usually doubles the values calculated according to the L_1 principle. Values available from ABB at request.

The table below gives lubrication intervals according to the L_1-principle for different speeds. The L_{10} values are valid for horizontally mounted motors (B3), with about 80 °C bearing temperature and high quality grease with lithium complex soap and mineral or PAO-oil.

For more information, see ABB's low voltage motors manuals.

Lubrication intervals in duty hours for ball bearings

Motor size	Amount of grease g/ bearing	Amount of grease g/N-end	Output kW	Speed 1800 r/min	Speed 1500 r/min	Speed 1000 r/min	Speed 500-900 r/min
160	13	13	all	14 300	16 300	20 500	21 600
180	15	13	all	13 100	15 100	19 400	20 500
200	20	15	all	11 000	13 000	17 300	18 400
225	23	20	all	10 100	12 000	16 400	17 500
250	30	23	all	8500	10400	14700	15 800
280	40	40	all	7800	9600	13 900	15 000
315	55	40	all	5900	7600	11 800	12 900
355	70	40	all	4000	5600	9600	10 700
400	85	55	all	3200	4700	8600	9700
450	95	70	all	2500	3900	7700	8700

Lubrication intervals in duty hours for roller bearings

Motor size	Amount of grease g/ bearing	Amount of grease g/N-end	Output kW	Speed 1800 r/ min	Speed 1500 r/ min	Output kW	Speed 1000 r/ min	Output kW	Speed 500-900 r/min
160	13	13	all	7200	8 100	≤ 11	10 300	all	10 800
180	15	13	all	6600	7500	≤ 15	9 700	all	10 200
200	20	15	all	5500	6500	≤ 22	8 600	all	9 200
225	23	20	all	5100	6000	≤ 30	8 200	all	8 700
250	30	23	all	4200	5200	≤ 37	7300	all	7900
280	40	40	all	3900	4800	all	6900	all	7500
315	55	40	all	2900	3800	all	5900	all	6500
355	70	40	all	2000	2800	all	4800	all	5400
400	85	55	all	1600	2400	all	4300	all	4800
450	95	70	all	1300	2000	all	3800	all	4400

Stator winding

The stator winding is designed for use with frequency converters in the rolling mill environment. The motors are electrically designed for a certain speed range in order to minimize the current and enable use of the smallest possible frequency converter.

Roller table motors typically run at low speeds and have high peak torque demands, but the requirements vary case by case.

The high number of poles (6 to 12) means the stator winding is extremely strong and mechanically resistant because the winding ends are very short and tightly terminated.

The stator winding insulation meets Class F requirements (temperature limit +155 °C). Class H insulation (temperature limit 180 °C) is available on request.

The stators are wound with Class H enamel wire and the winding is then trickle impregnated with polyester or epoxy resin. Gaps between individual conductors are effectively filled with the impregnated material resulting in good thermal conductivity and superior mechanical strength.

An effective way of protecting the stator winding against overheating is direct monitoring of the winding temperature. As a standard feature the motors are fitted with three PTC thermistors embedded in the stator winding overhang. Six thermistors (for warning and tripping), bimetallic relays or Pt-100 measuring resistors are also available on request.

Bearing seals

Roller table motors are equipped with labyrinth sealing at D-end. N–end is totally enclosed. This construction gives a proper protection in demanding environment against water and dust.

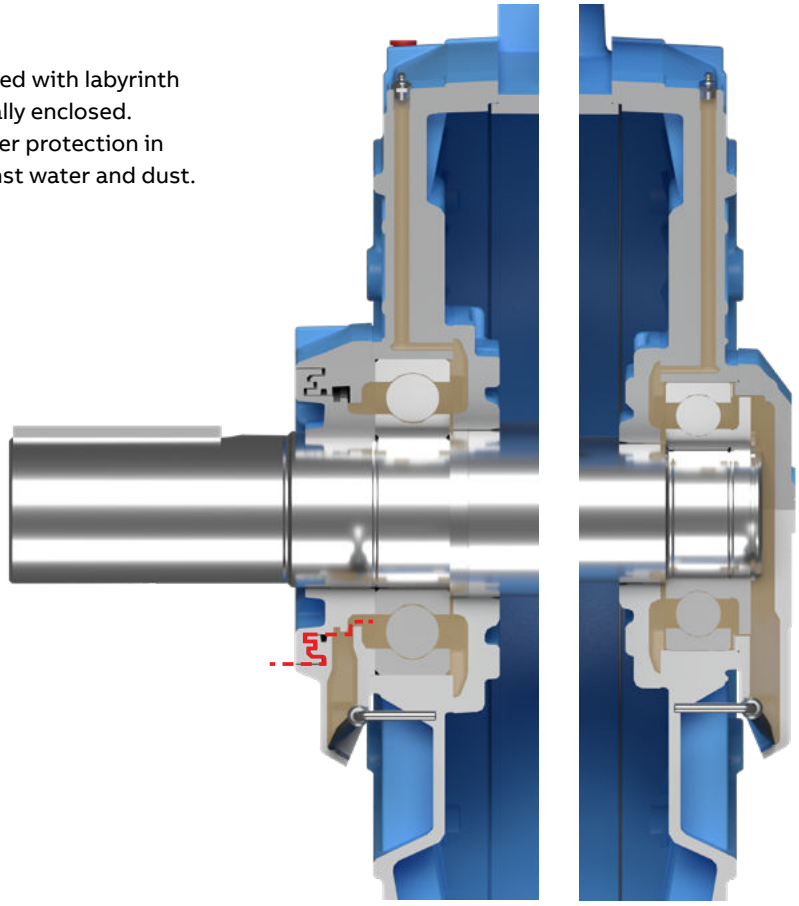

Bearing seals

Motor size	Efficiency class	Product design code	Pole	Standard design		Alternative designs
				D-end	N-end	Radial seal at D-end (variant code 072)
132	all	G	4-8	Gamma seal	Blind flange	Radial seal
160	all	G	4-12	Gamma seal	Blind flange	Radial seal
180	all	G	6-12	Gamma seal	Blind flange	Radial seal
200	all	G	6-12	Gamma seal	Blind flange	Radial seal
225	all	G	6-12	Gamma seal	Blind flange	Radial seal
250	all	G	6-12	Gamma seal	Blind flange	Radial seal
280	all	G	6-12	Labyrint seal	Blind flange	NA
315	all	G	6-12	Labyrint seal	Blind flange	NA
355	all	G	8-12	Labyrint seal	Blind flange	NA
400	all	G	8-12	Labyrint seal	Blind flange	NA
450	all	G	8-12	Labyrint seal	Blind flange	NA

Mechanical design

Radial forces

The following table shows permissible radial forces on the shaft in Newtons, assuming zero axial force, a 25 °C ambient temperature, and normal conditions. The values are given for a calculated bearing life of 20 000 and 40 000 hours per motor size.

These calculated values further assume mounting position IM B3 (foot-mounted), with force directed sideways. In some cases, the strength of the shaft affects permissible forces.

Permissible loads of simultaneous radial and axial forces can be supplied on request.

If the radial force is applied between points X0 and Xmax, the permissible force FR can be calculated with the following formula:

$$F_R = F_{X0} - \frac{X}{E}(F_{X0} - F_{Xmax})$$

Where

E length of the shaft extension in the standard version



Motor size	Poles	Length of shaft extension	Basic design with deep groove ball bearings				Roller bearings			
			Mounting arrangement IM B3				Mounting arrangement IM B3			
			20,000 h		40,000 h		20,000 h		40,000 h	
			FX0 (N)	FXmax (N)	FX0 (N)	FXmax (N)	FX0 (N)	FXmax (N)	FX0 (N)	FXmax (N)
132 SMC	4	80	3130	2650	2480	2100	9250	7810	7510	6340
160LD	4	110	4000	2510	3170	2510	9610	2510	7800	2510
180LA	6	110	5250	3300	4160	3300	10300	3300	9590	3300
	8	110	5780	3300	4580	3300	10300	3300	10300	3300
200 LB	6	110	6930	4980	5490	4530	16280	4980	13230	4980
200 LC	8	110	7640	4980	6060	4980	17750	4980	14420	4980
225MB, MC	6	140	7940	5050	6300	5050	19940	5050	16190	5050
225MB, MC, MD	8	140	8740	5050	6930	5050	21740	5050	17650	5050
250MB	6	140	9710	6350	7700	6210	28780	6350	23370	6350
250MB, MC	8	140	9710	6350	7700	6210	28780	6350	23370	6350
280MC	6	140	10490	8810	8330	6990	28340	9950	23020	9950
280MC	8	140	11550	9700	9170	7700	30900	9950	25100	9950
315LC	6	170	12450	10410	9820	8210	37130	11680	30140	11680
315LC	8	170	13720	11470	10810	9060	40490	11690	32870	11690
355SB	8	210	17980	14740	14210	11640	55950	14930	45430	14930
355LA	8	210	18100	14890	14260	11990	56600	14890	45940	14890
400MA	8	210	19610	16560	15410	13010	64990	21630	52750	21630
400LA	8	210	19660	16900	15400	13420	65500	21630	53150	21630
450LD	8	210	21400	18880	16530	14570	83420	26950	67660	26950

Mechanical design
Axial forces

The following tables give the permissible axial forces in Newton, assuming zero radial force. The values are based on normal conditions at 50 Hz with standard bearings and calculated bearing lives of 20,000 and 40,000 hours.

The permissible loads of simultaneous radial and axial forces will be supplied on request.

At 60 Hz the values are to be reduced by 10%.

For axial force F_{AD}, it is assumed that the D-bearing is locked with a locking ring.

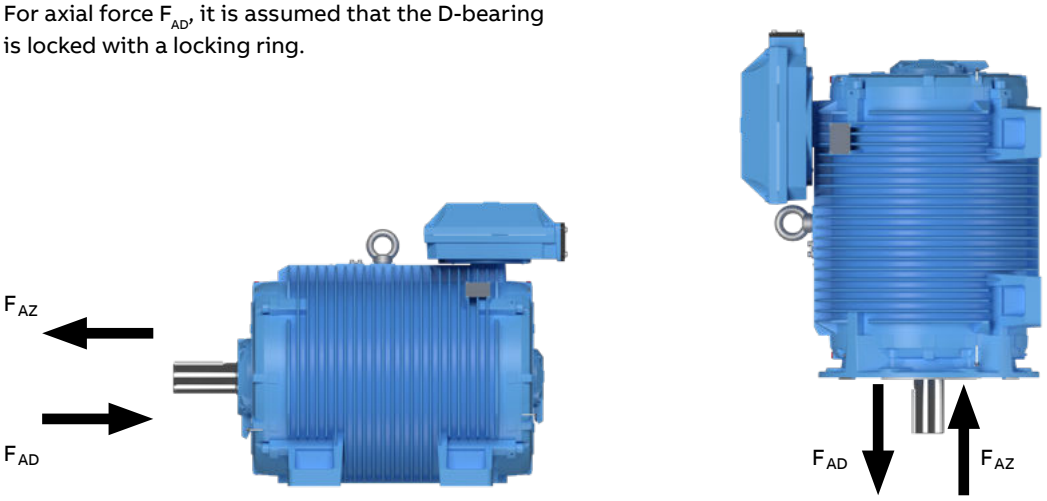

Mounting arrangement IM B3

Motor size	Poles	Length of shaft extension	Mounting arrangement IM B3				Mounting arrangement IM V1			
			20,000 h		40,000 h		20,000 h		40,000 h	
			FAD (N)	FAZ (N)	FAD (N)	FAZ (N)	FAD (N)	FAZ (N)	FAD (N)	FAZ (N)
132 SM	4	80	3140	2700	2370	1930	2995	2010	2330	1405
160 L	4	110	4070	3470	3070	2470	4010	2440	3210	1650
180 L	6	110	4670	4110	3500	2940	5390	3620	4210	2450
	8	110	5210	4650	3910	3350	5920	4180	4620	2880
200 L	6	110	6240	5200	4700	3660	7250	4530	5710	2990
	8	110	6940	5900	5240	4200	7960	5240	6250	3530
225 SM	6	140	8900	8020	7100	6220	10200	7200	8400	5400
	8	140	9750	8870	7770	6890	11170	7980	9190	6000
250 M	6	140	8820	6420	6890	4490	10530	5320	8570	3360
	8	140	9970	7570	7620	5220	11670	6450	9310	4090
280 M	6	140	9630	7030	7560	4960	11620	4930	9910	2860
	8	140	10880	8280	8340	5740	13230	6180	10690	3640
315 L	6	170	10740	7780	8330	5370	15350	4680	12900	2240
	8	170	11970	9010	9250	6290	16860	5950	13830	3170
355 S	8	210	11950	14850	8490	11390	17900	10880	14380	7360
355 L	8	210	11680	14540	8240	11100	19380	9400	15860	5880
400 M	8	210	11690	16090	8010	12450	21080	9710	17330	5960
400 L	8	210	11490	15810	7820	12140	22490	8300	18740	4550
450 L	8	210	12150	16150	8170	12170	28760	4860	24660	770

Terminal box

The terminal box is located on the top of the motor at the N-end. For shaft heights of 132, the terminal box is mounted on the N-end shield. For shaft heights from 160 to 250, the terminal box is integrated with the stator frame. In larger motors, the terminal box can be rotated 4 x 90°, with the cable direction from the N-end as standard. Terminal boxes positioned either on the left or right side of the motor are available on request.

The terminal box can be mounted on the non-drive end, away from the hot metal, or fitted with quick connectors for rapid installation.

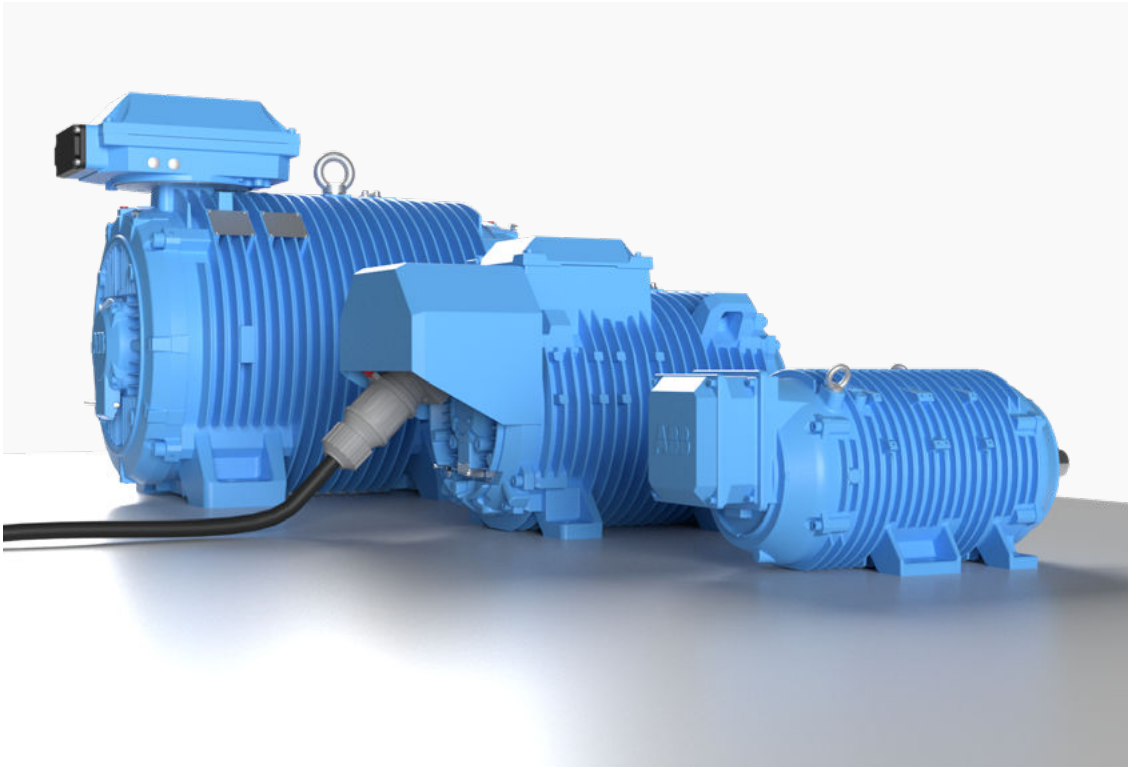

The terminal board has three terminals for the power leads and one terminal for earthing. All motors are equipped with an external earthing stud on the motor frame.

Terminal box

Standard delivery 400 V

Standard delivery if no other information is provided.

Motor size	Product design code	Pole number	Terminal box type	Size of gland plate opening in the terminal box	45° angle adapter	Amount and size of threaded plugged holes	Max. connectable core cross section mm2 / phase	Number and size of terminal bolts	Earthing in the main terminal box
132SM	G	2-8	N-end shield	-	-	2x M32x1.5	1x10	6xM5	2 x M5
160L_	G	4	integrated	-	-	1xM32x1.5	1x10	6xM6	M6
180L_	G	6-8	integrated	-	-	1xM32x1.5	1x10	6xM6	M6
200 - 250	G	6-8	integrated	-	-	1xM40x1.5	1x35	6xM10	M6
280M_	G	6-8	210	C	-	1xM50x1.5	2x240	6xM12	2 x M10
315L_	G	6-8	210	C	-	1xM50x1.5	2x150	6xM12	2 x M10
355S_	G	8	370	D	-	1xM63x1.5	2x240	6xM12	2 x M10
355L_	G	8	370	D	-	1xM63x1.5	2x240	6xM12	2 x M10
400M_	G	8	370	D	-	1xM63x1.5	2x240	6xM12	2 x M10
400L_	G	8	370	D	-	1xM63x1.5	2x240	6xM12	2 x M10
450 L	G	8	750	E		2xM63x1.5	4x240	6xM12	2 x M12

Auxiliary cable entries	Pole number	Amount and size of threaded plugged holes
132	all	-
160-250	all	1x M20x1,5
280-450	all	2x M20x1,5

Motor size	Product design code	Earthing on the frame
132	all	M5
160-180	all	M6
200-250	all	M6 (with clamp)
280-400	all	M10
450	all	M10

—
01 Terminal box layout examples

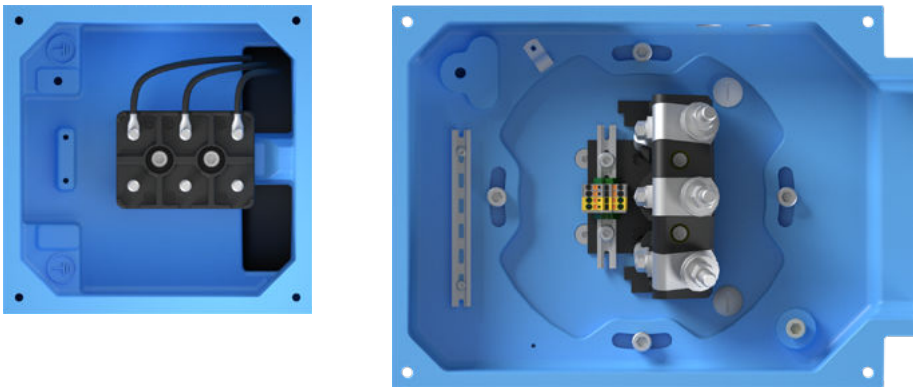

—
01

Terminal box

Terminal box dimensions

01 Terminal box type 63 and 160

02 Terminal box types 210 and 370

03 Terminal box type 750

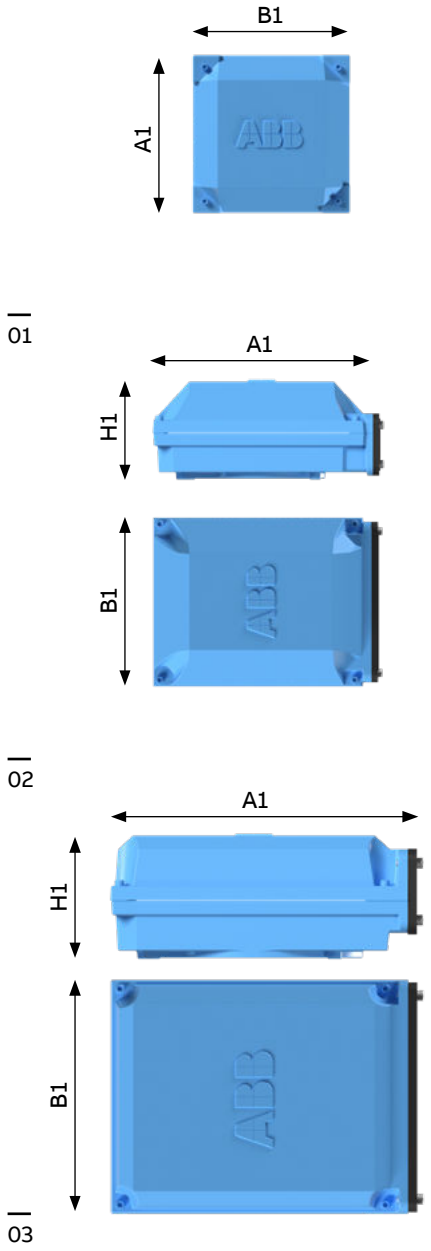

Terminal box types	A1	B1	H1	Gland plate opening
210	416	306	177	C
370	451	347	200	D
750	523	413	219	E

Dimensions for terminal box inlets

Corresponds to motor sizes 160 and above

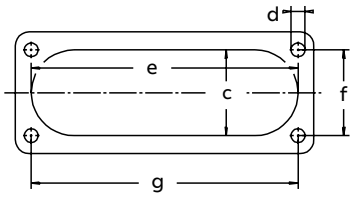

Flange opening	c mm	e mm	f mm	g mm	d thread type
C *)	67	193	62	193	M8
D	100	300	80	292	M10
E	115	370	100	360	M12

*) Shaft heights 280

Note ! The C flange is different depending on shaft height.

Terminal box
Cable glands

The motors are delivered as standard with plugged cable entries or cable sealing units. There is available a broad selection of different type of cable glands, which are suitable for different types of cable and outerdiameter ranges. To get suitable terminations, please state cable type, quantity, cable direction and size when ordering.

Size of threaded opening for cable gland	Cable gland(s) nickel plated brass, variant code 230 or 731	EMC Cable gland(s) nickel-plated brass, variant code 704	Cable gland(s) plastic, variant code 375 or 376
	Cable outer diameter, mm	Cable outer diameter, mm	Cable outer diameter, mm
M16 x 1.5	4-12	4-8	4-12
M20 x 1.5	4-12	4-12	4-12
M25 x 1.5	10-18	10-18	10-18
M32 x 1.5	14-24	14-24	14-24
M40 x 1.5	22-32	22-32	22-32
M50 x 1.5	26-35	26-35	26-35
M63 x 1.5	35-45	35-45	35-45

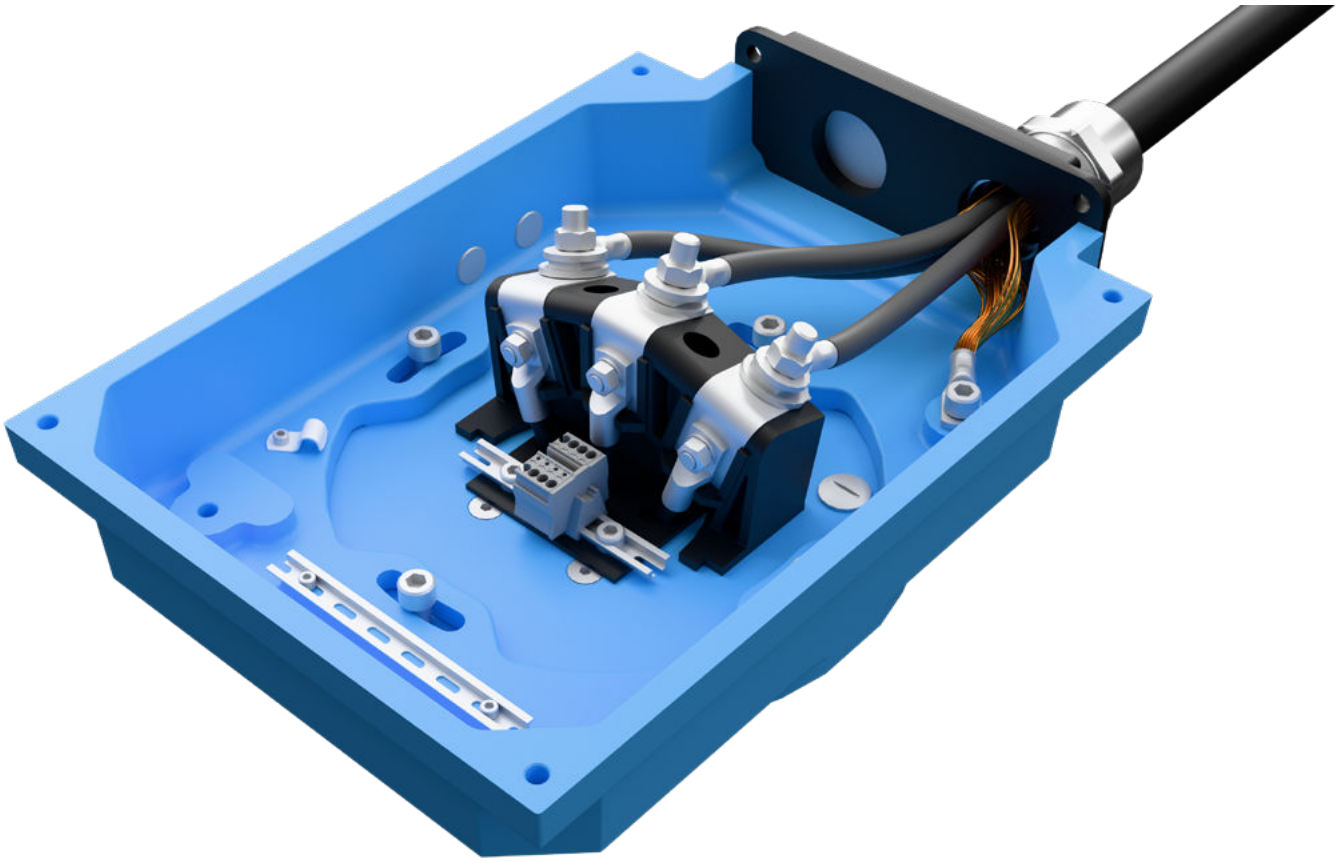

Dimension drawings

Roller table motors, sizes 132

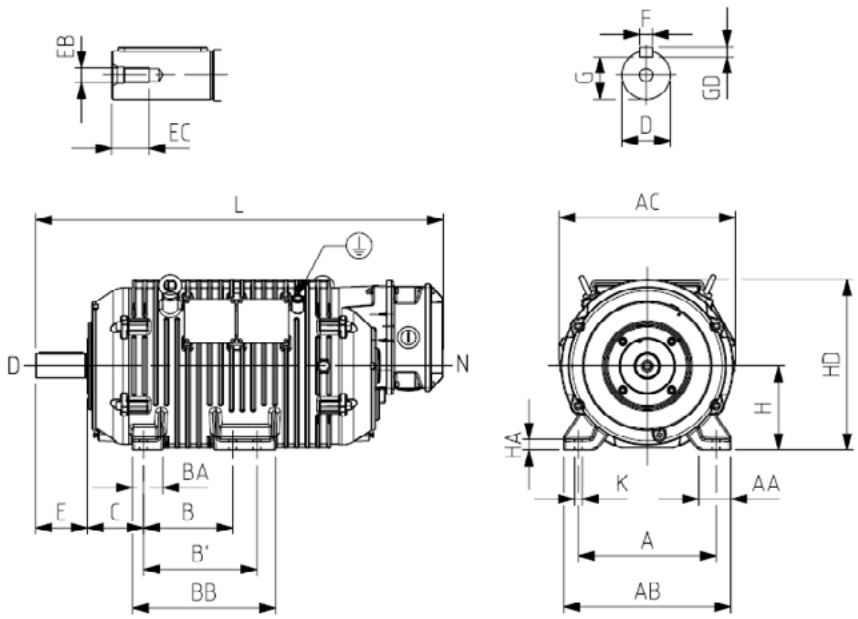

Foot-mounted; IM B3 (IM 1001)

Motor size	A	AA	AB	AC	B	B'	BA	BB	C	D	E	EB	EC
132	216	48	262	277	140	178	47	224	89	38	80	M12	28

Motor size	F	G	GD	H	HA	HD	K	L	L'
132	10	33	8	8	8	274	12	12	-

Tolerances:	
A, B	± 0,8
D, DA	ISO k6 < Ø 50mm
	ISO m6 > Ø 50mm
F	ISO h9
H	+0 -0.5
C	± 0.8

Dimension drawings

Roller table motors, sizes 160 - 250

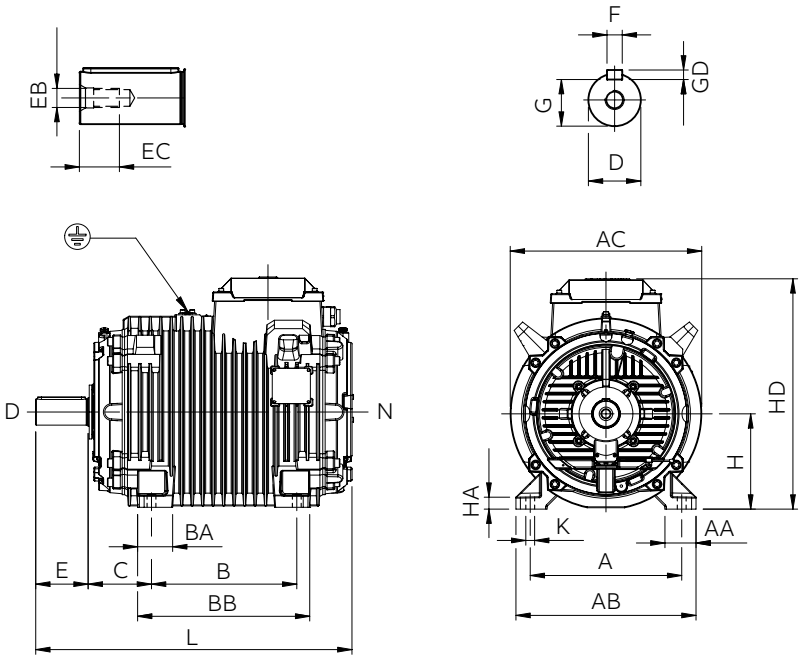

Foot-mounted; IM B3 (IM 1001)

Motor size	A	AA	AB	AC	B	BA	BB	C	D	E	EB	EC
160	254	67	310	314	254	59	295	108	42	110	M16	36
180	279	58	324	355?	279	52	323	121	48	110	M16	36
200	318	65	378	402	305	74	361	133	55	110	M20	42
225	356	80	425	450	311	100	389	149	60	140	M20	42
250	406	80	473	500	349	120	446	168	65	140	M20	42

Motor size	F	G	GD	H	HA	HD	K	L	L'
160	12	37	8	160	24	377	14,5	661	-
180S	14	42,5	9	180	25	450	14,5	630	-
180L	14	42,5	9	180	24	412	15	676	-
200	16	49	10	200	25	483	18,5	667	-
225	18	53	11	225	30	530	18,5	765	-
250	18	58	11	250	30	580	24	772	-

Flange-mounted versions for shaft heights 160-250 are also available on request.

Tolerances:	
A, B	± 0,8
D, DA	ISO k6 < Ø 50mm
	ISO m6 > Ø 50mm
F	ISO h9
H	+0 -0.5
C	± 0.8

Dimension drawings

Roller table motors, sizes 280 - 450

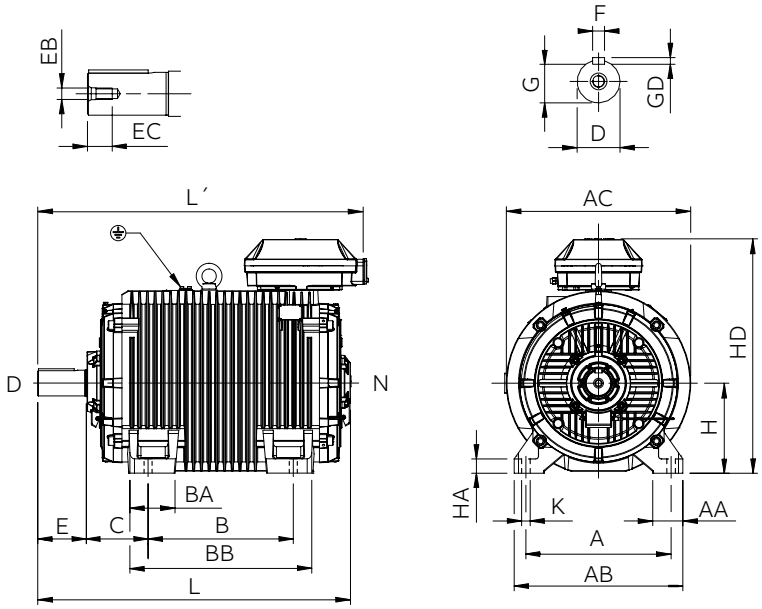

Foot-mounted; IM B3 (IM 1001)

Motor size	A	AA	AB	AC	B	BA	BB	C	D	E	EB	EC
280	457	85	530	578	419	125	547	190	75	140	M20	40
315	508	105	590	651	508	162	645	216	90	170	M24	52
355S	610	120	700	753	500	175	677	254	100	210	M24	51
355L	610	120	700	753	630	175	807	254	100	210	M24	51
400M	686	140	820	833	630	180	797	280	110	210	M24	50
400L	686	140	820	833	710	180	877	280	110	210	M24	50
450	800	160	950	946	1120	212	1320	250	120	210	M24	50

Motor size	F	G	GD	H	HA	HD	K	L	L’
280	20	67,5	12	280	40	750	24	932	993
315	25	81	14	315	50	820	30	1096	1159
355S	28	90	16	355	55	936	35	1223	1278
355L	28	90	16	355	55	936	35	1380	1433
400M	28	100	16	400	60	1022	35	1415	1457
400L	28	100	16	400	60	1022	35	1560	1602
450	32	109	18	450	60	1163	42	1850	1845

Tolerances:	
A, B	± 0,8
D	ISO k6 < Ø 50mm
	ISO m6 > Ø 50mm
F	ISO h9
H	+0 -0.5
C	± 0.8

MOTORS IN BRIEF

Sizes 132 - 250

Motor size		132	160	180	200	225	250
Stator and end shields	Material	Cast iron					
	Paint color shade	Munsell blue 8B 4.5/3.25					
	Corrosion class	C3					
Feet	Material	Integrated cast iron feet					
Bearings	D-end	6308-2Z/C3	6309/C3	6310/C3	6312/C3	6313/C3	6315/C3
	N-end	6308-2Z/C3	6309/C3	6309/C3	6310/C3	6312/C3	6313/C3
Axially locked bearings		Locked at D-end					
Bearing seals	D-end	Labyrinth seal					
	N-end	Closed bearing cover					
Lubrication		Permanently lubricated shielded bearings	Regreasable bearings, regreasing nipples M6x1	Regreasable bearings, regreasing nipples M10x1			
Measuring nipples		Not included	Included				
Rating plate	Material	Stainless steel					
Terminal box	Frame and cover	Cast iron					
	Corrosion class	C3					
	Cover screws	Zinc-electroplated steel					
Connections	Threaded openings	2xM32	1xM32+1xM20	1xM32+ 1XM20	1xM40+ 1xM20	1xM40+ 1xM20	1xM40+ 1xM20
	Cable entries	Glands as option	Cable flange included, glands as option				
	Terminals	3 terminals for connection with cable lugs (not included)					
Stator winding	Material	Copper					
	Insulation	Insulation class F. Temperature rise class B unless otherwise stated.					
	Winding protection	3 PTC thermistors, 150 °C					
Rotor winding	Material	Pressure die-cast aluminum					
Balancing method		Half-key balancing as standard					
Keyway		Closed keyway					
Drain holes		Drain holes with closable plastic plugs, open on delivery					
Enclosure		IP 55					
Cooling method		IC 410					

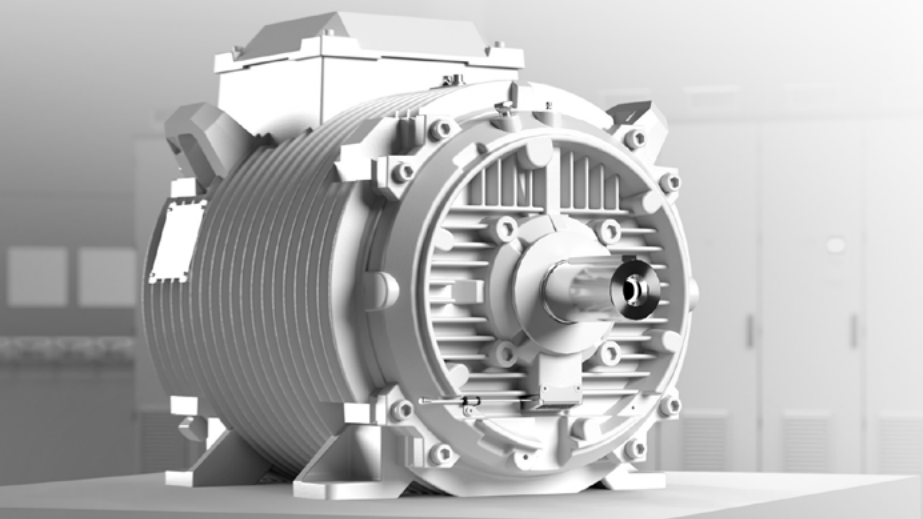

Motors in brief

Sizes 280 - 450

Motor size		280	315	355	400	450
Stator and end shields	Material	Cast iron				
	Paint color shade	Munsell blue 8B 4.5/3.25				
	Corrosion class	C3				
Feet	Material	Integrated cast iron feet				
Bearings	D-end	6316/C3	6319/C3	6322/C3	6324/C3	6326M/C3
	N-end	6316/C3	6316/C3	6316/C3	6319/C3	6322/C3
Axially locked bearings		Locked at D-end				
Bearing seals	D-end	Labyrinth seal				
	N-end	Closed bearing cover				
Lubrication		Regreasable bearings, regreasing nipples M10x1				
Measuring nipples		Included				
Rating plate	Material	Stainless steel				
Terminal box	Frame and cover	Cast iron				
	Corrosion class	C3				
	Cover screws	Zinc-electroplated steel				
Connections	Threaded openings	2xM50 + 2xM20	2xM50 + 2xM20	2xM63 + 2xM20	2xM63 + 2xM20	2xM63 + 2xM20
	Terminals	3 terminals for connection with cable lugs (not included)				
	Cable glands	Cable flange included, glands as option				
Stator winding	Material	Copper				
	Insulation	Insulation class F. Temperature rise class B unless otherwise stated.				
	Winding protection	3 PTC thermistors, 155 °C				
Rotor winding	Material	Pressure die-cast aluminum				
Balancing method		Half-key balancing				
Keyway		Open keyway				
Drain holes		Drain holes with closable plastic plugs, open on delivery				
Enclosure		IP 55				
Cooling method		IC 410				

05 MOTOR CONSTRUCTION

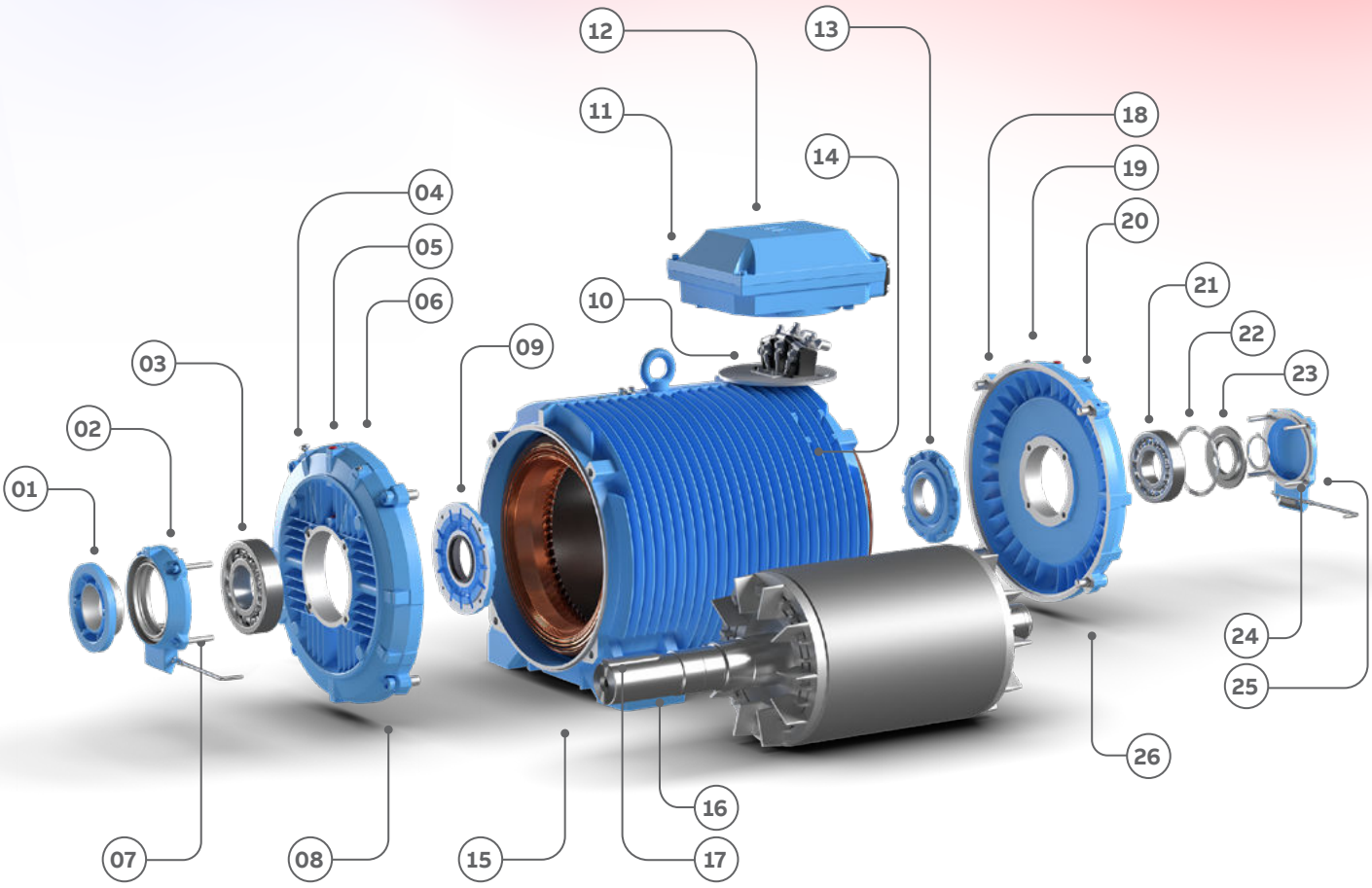

01 Valve disc with labyrinth seal, D-end

02 Outer bearing cover, D-end

03 Bearing, D-end

04 SPM nipple, D-end

05 Endshield, D-end

06 Grease nipple, D-end

07 Screws for bearing cover, D-end

08 Screws for endshield, D-end

09 Inner bearing cover, D-end

10 Terminal board

11 Screws for terminal box cover

12 Terminal box

13 Inner bearing cover, N-end

14 Rating plate

15 Stator frame

16 Rotor with shaft

17 Key, D-end

18 SPM nipple, N-end

19 Endshield, N-end

20 Grease nipple, N-end

21 Bearing, N-end

22 Wave spring

23 Valve disc, N-end

24 Screws for bearing cover, N-end

25 Outer bearing cover, N-end

26 Screws for endshield, N-end

ABB ACCESS

With ABB Access, you can unlock all aspects of your drives, motors or PLCs, from one central location, the palm of your hand.

Simply scan the QR code on the ABB product to get started

ABB Access helps you easily find up-to-date product online data. It also provides easy access to documentation and manuals. If you happen to experience issues with your ABB product, this can be fastly and easily reported online to reach expert support from ABB.

- Device information - Easy Access to detailed product information and EcoDesign data
- Documentation - Quick Access to user manuals and step-by-step instructions
- Report issues - Fast Access to online issue reporting
- Contact - Access ABB contacts and search Channel partners



Total product offering

Motors and generators with a complete portfolio of services

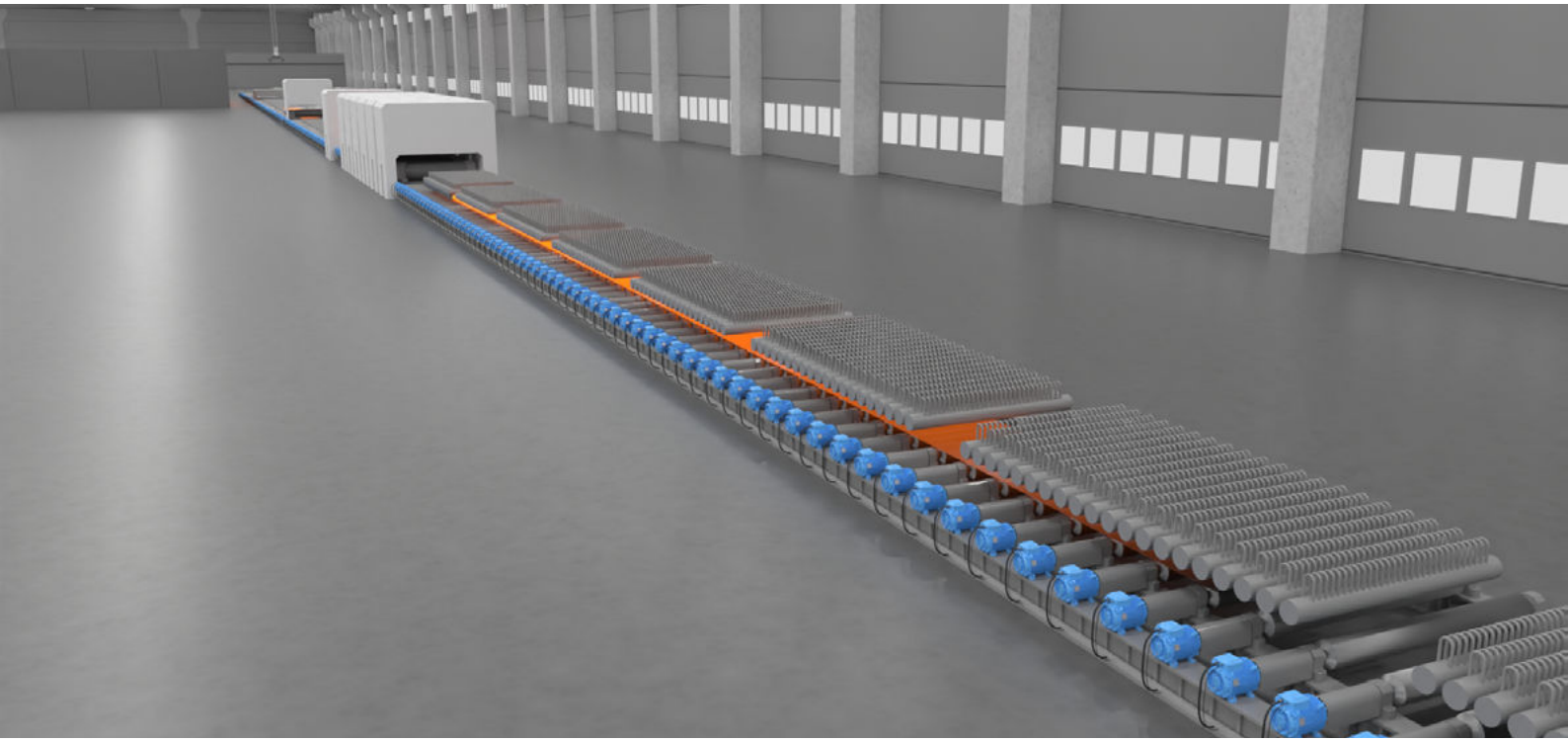

IEC motors

- Low voltage motors
- High voltage induction and synchronous motors
- Marine motors
- Motors for explosive atmospheres
- Motors for food and beverage
- Motors for variable speed drives
- Permanent magnet motors
- Roller table motors
- Synchronous reluctance motors
- Traction motors

NEMA motors

- Low voltage motors
- High voltage induction and synchronous motors
- Marine motors
- Motors for explosive atmospheres
- Motors for variable speed drives
- Permanent magnet motors
- Servomotors
- Washdown motors

Generators

- Generators for wind turbines
- Generators for diesel and gas engine power plants
- Generators for steam and gas turbine power plants
- Generators for marine applications
- Generators for industrial applications
- Generators for traction applications
- Synchronous condensers for reactive power compensation

Life cycle services

ABB's portfolio of drives

Optimal solution for you



Being able to rely on the continuous high performance and efficiency of your operations is something you want to take for granted. ABB variable-frequency drives are made with all this in mind, established upon more than 40 years of experience and backed by a broad range of life cycle services.

ABB drives help you to optimize your processes and systems with state-of-the-art motor control technology, resulting in increased energy efficiency, better product quality, and reduced operating costs with higher output, less downtime, and reduced need for maintenance. All ABB drives are designed for easy selection, ordering, installation and use, and they offer integrated safety features, giving you more time to focus on what matters for you and your business.

Our portfolio offers low-voltage AC and DC drives, medium-voltage AC drives, and motion control drives spanning the fractional-kilowatt to multi-megawatt power level. There is a drive available for essentially every industry and application and for all types of motors, in environments ranging from water utility facilities to clean electrical rooms, and to harsh coal mines and windy offshore platforms to food and beverage production. This wide product range allows you to select the best-fitting drive solution, providing maximum reliability and efficiency for every need.

For more information and contact details:

www.abb.com/motors&generators

© Copyright 2025 ABB. All rights reserved.
Specifications subject to change without notice.

9AKK105928 REV D EN 06-2025