TI01139C/07/EN/04.20
71508956
2020-12-03

Technical Information
CUA252

Flow assembly for CUS52D turbidity sensor



Application

The CUA252 flow assembly is designed for the installation of the CUS52D turbidity sensor. It can be used anywhere process medium is conducted in pipelines or, following sampling, is held in closed pipes.

- Turbidity measurement at all stages of the water treatment process
- Final turbidity measurement in outlet of waterworks
- Turbidity measurement in inlet of waterworks
- Turbidity measurement for filter monitoring and filter backwashing
- Turbidity measurement in drinking water networks

Your benefits

- Easy wall or pipe mounting
- Variable mounting
- Self-venting with vertical installation
- Suitable for use in drinking water thanks to PE100 material

Endress+Hauser
People for Process Automation

Function and system design

Measuring system

A complete measuring system comprises:
- Flow assembly Flowfit CUA252
- Sensor Turbimax CUS52D
- Transmitter, e.g. Liquiline CM442
- Measuring cable

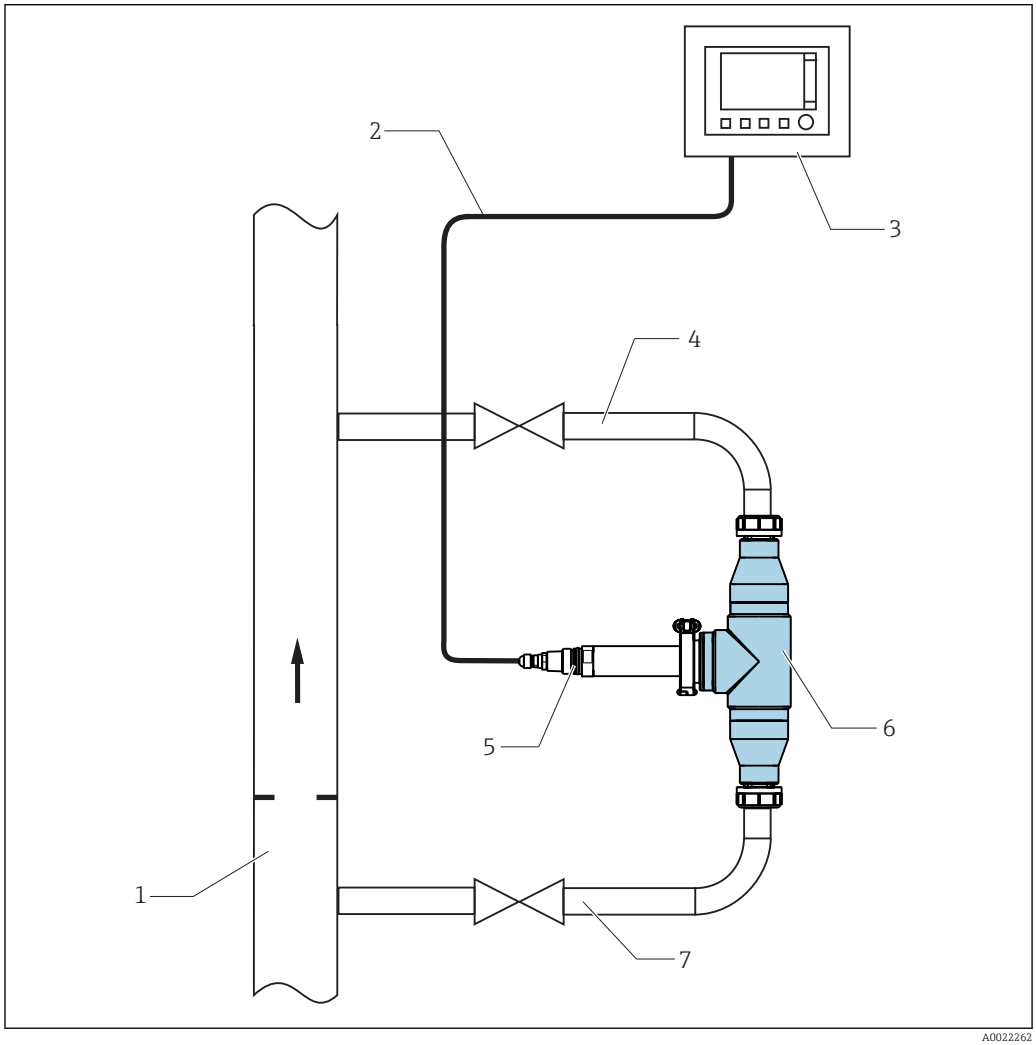

1 *Measuring system*

1 Process pipe
2 Measuring cable
3 Liquiline CM442 transmitter
4 Return line with shut-off valve
5 Turbidity sensor CUS52D
6 Flow assembly CUA252
7 Inlet with shut-off valve

Installation

Installation instructions

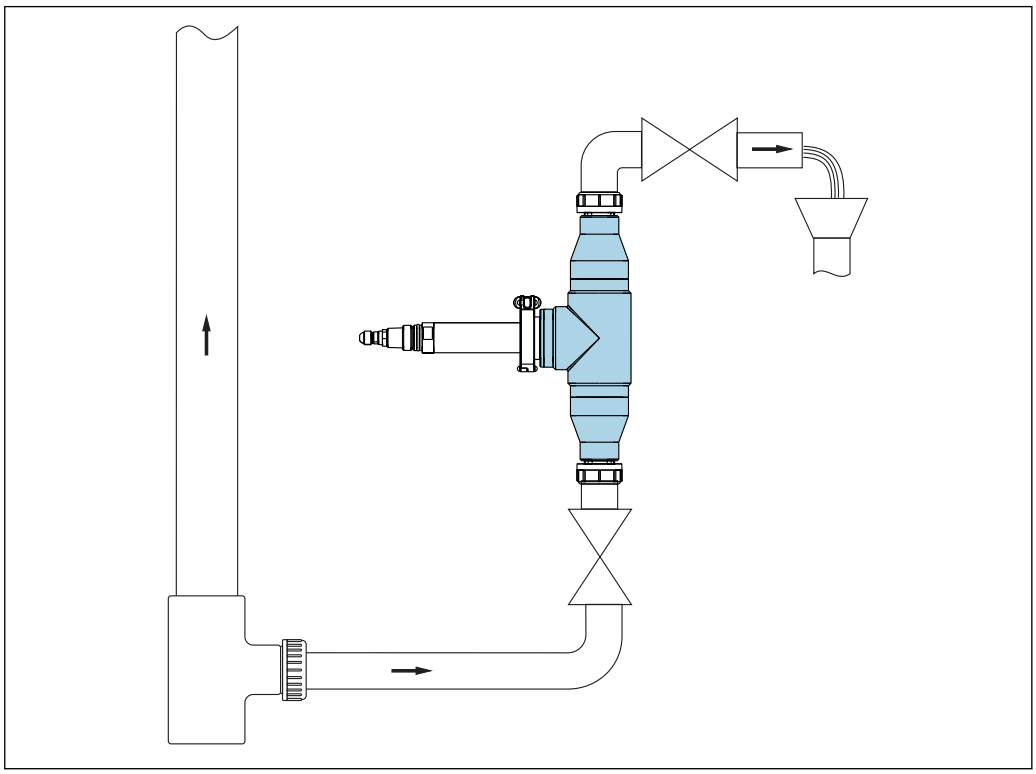

A0022259

2 *Connection example with open outlet*

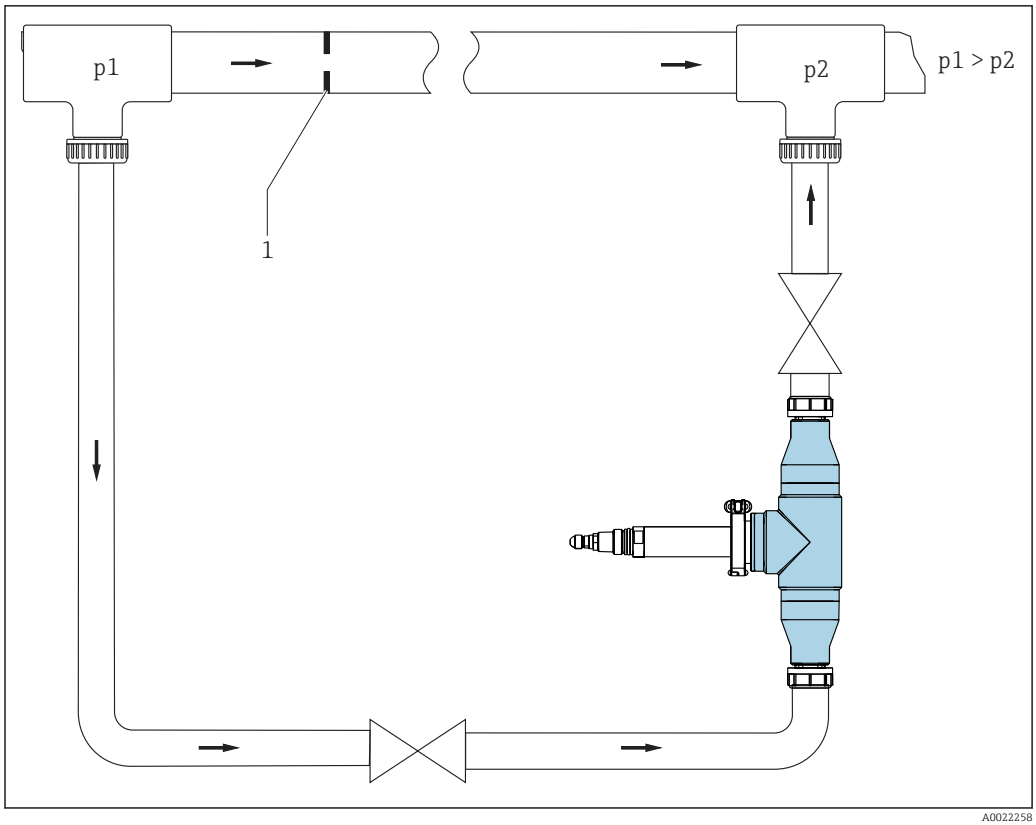

3 Connection example with bypass and orifice plate in the main pipe (supply from below)

1 Orifice plate

No measures to increase pressure are required for branch pipes (pipes that branch off from the main pipe).

To achieve flow through the assembly with a bypass, pressure p1 must be higher than pressure p2.

▶ Install the orifice plate in the main pipe → 3, 4.

The inlet and outlet connection of the flow assembly are always identical. The system is symmetrical.

1. Install the flow assembly vertically.
2. Connect the inflow at the bottom end (upward flow in the pipe).

Avoid buckles and loops in the hose system.

Pay attention to the installation instructions (flow direction) for the sensor.

Many media tend to develop gas bubbles in a depressurized state. The operation of the flow assembly under pressure (adjustable valve after the flow assembly) prevents this behavior in many cases.

Mounting the flow assembly

Mounting the assembly with wall holder unit

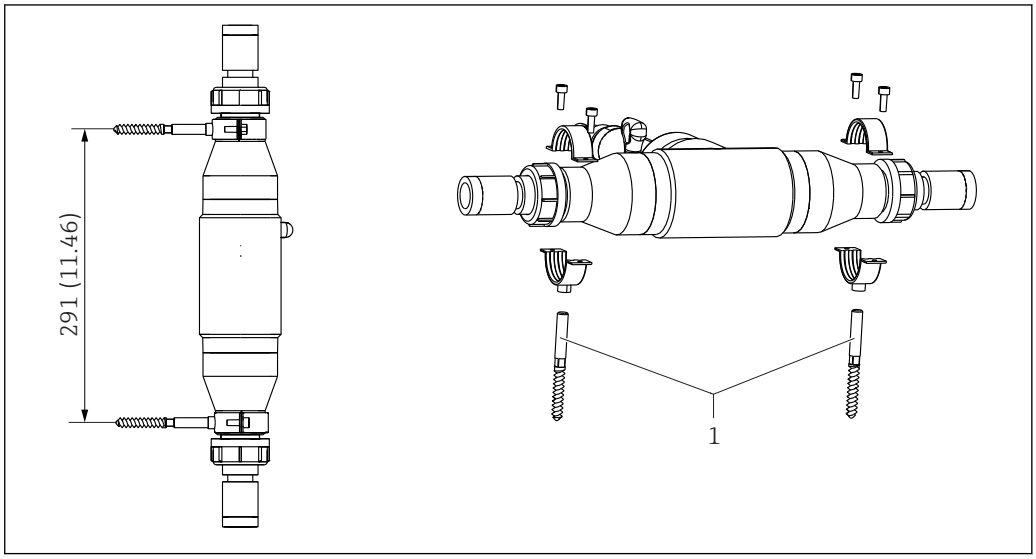

4 *Wall holder unit. Engineering unit: mm (in)*

1 Hanger bolt STST 10x60 (included in scope of delivery of wall mounting kit)

Mounting the flow assembly in a bypass

1. Install a shut-off valve upstream and downstream from the flow assembly in the bypass line.
   ↳ This makes it possible to perform maintenance tasks, such as the cleaning of the sensor, without affecting the process.
2. Mount the assembly vertically.
3. Establish the medium connection using commercially available connection fittings.

Mounting the flow assembly in a branch pipe with an open outlet

1. Install a shut-off valve upstream from the flow assembly.
2. Mount the assembly vertically.
3. Establish the medium connection using commercially available connection fittings.

Mounting the assembly with a bubble trap

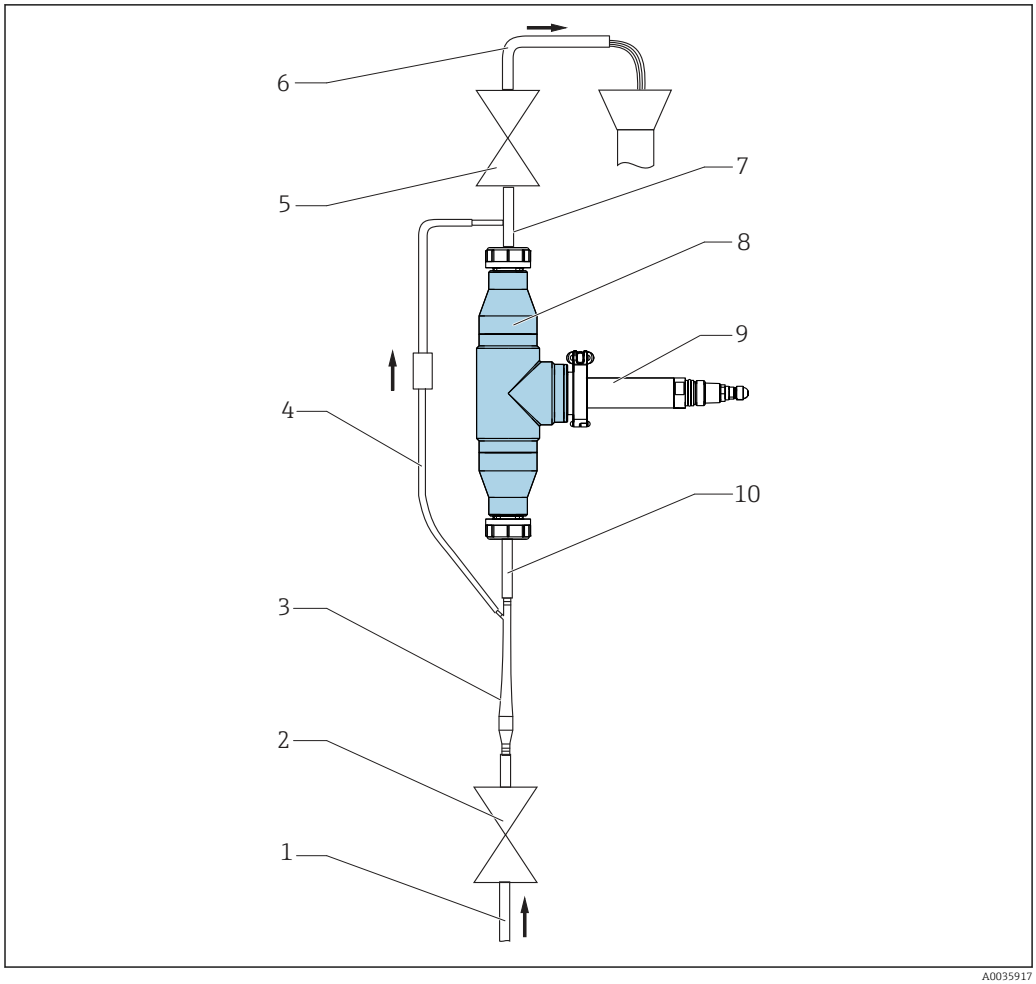

5 *Connection example with bubble trap*

1 *Inlet from below*
2 *Shutoff valve*
3 *Bubble trap*
4 *Venting of bubble trap (included in scope of delivery)*
5 *Shut-off valve (throttle for increasing pressure)*
6 *Outlet*
7 *D 12 adapter with connection for vent pipe (included in scope of delivery)*
8 *Flow assembly CUA252*
9 *Turbidity sensor CUS52D*
10 *D 12 adapter*

The wastewater from the bubble trap is not suitable for feeding back into the process.

1. For the hose system, use PVC hoses with an internal diameter of 12 mm (0.5 in).
2. Secure the hose system using worm drive hose clips (not included in scope of delivery).

The inlet and outlet connection of the flow assembly are always identical. The system is symmetrical.

Mounting the flow assembly

1. Install the flow assembly vertically. The inflow must be connected at the bottom end (upward flow in the pipe).
2. Insert an orifice plate into the upper assembly connection to obtain the desired volume flow (included in the delivery).

Orifice plates:
- 1 mm (0.04 in) for volume flow < 60 l/h (15.8 gal/h)
- 3 mm (0.12 in) for volume flow 60 to 100 l/h (15.8 to 26.4 gal/h)
- 5 mm (0.2 in) for volume flow > 100 l/h (26.4 gal/h)

Avoid buckles and loops in the hose system.

Pay attention to the installation instructions (flow direction) for the sensor .

Note the maximum pressure and maximum temperature when operating the bubble trap → 8.

Mounting the sensor

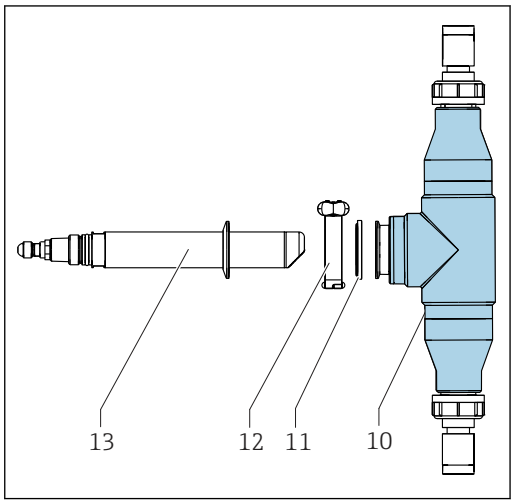

6 Sensor installation

10 Flow assembly CUA252
11 Clamp seal
12 Locking clamp
13 Turbidity sensor CUS52D

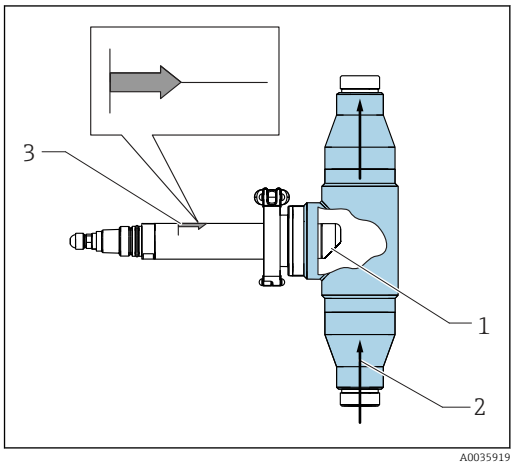

7 Sensor orientation

1 Optical windows
2 Direction of flow
3 Installation marking

Only insert turbidity sensors into the assembly with a 2" clamp.

1. Install the sensor in such a way that the optical windows of the sensor are aligned against the direction of flow (item 2).
2. Use the installation marking (item 3) on the sensor to ensure the correct sensor orientation.

Environment

Ambient temperature range	0 to 55 °C (32 to 131 °F)
Storage temperature	0 to 60 °C (32 to 140 °F), in the original packaging

Process

Process temperature range	0 to 50 °C (32 to 122 °F)
Process pressure range	0 to 6 bar (0 to 87 psi)

Pressure-temperature ratings

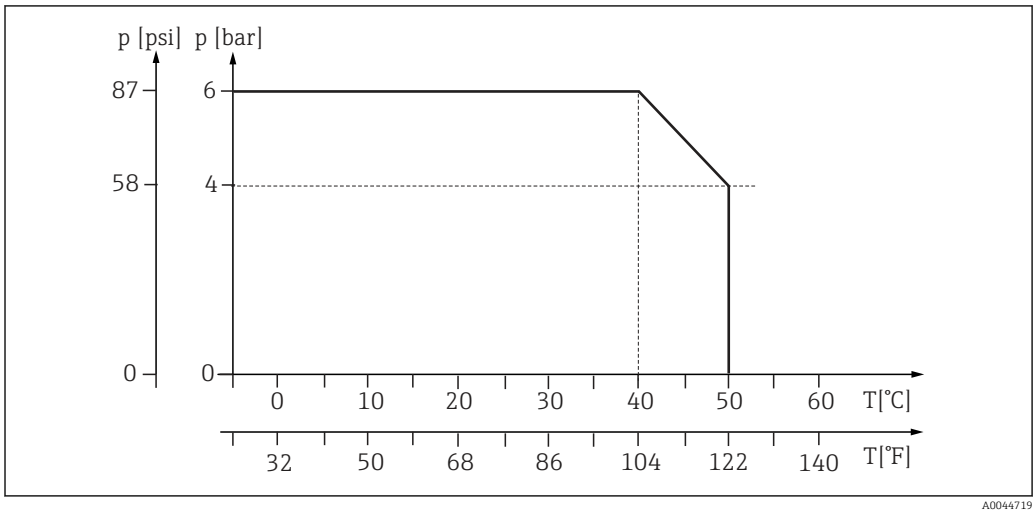

8 Pressure/temperature ratings

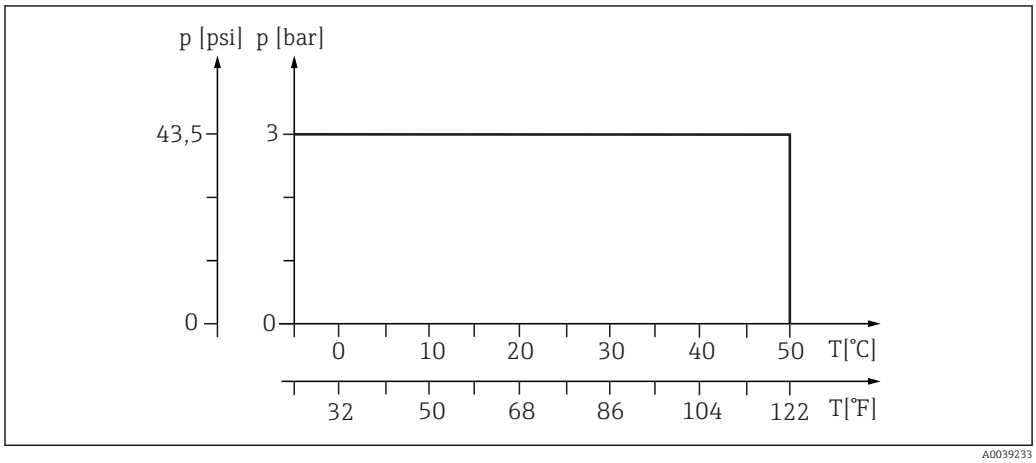

9 Pressure/temperature ratings for bubble trap

Flow velocity

Max. 2 m/s (6.6 ft/s) for low-viscosity media in pipes NW 50

Flow limit

Recommended flow [1]:	60 l/h (15.8 gal/h)
Range:	10 to 100 l/h (2.64 to 26.4 gal/h)

1) In the case of operation with a discarded sample (lost water)

Pressure loss

< 0.05 bar (0.7 psi) for flow up to 100 l/h (26.4 gal/h)

Mechanical construction

Dimensions

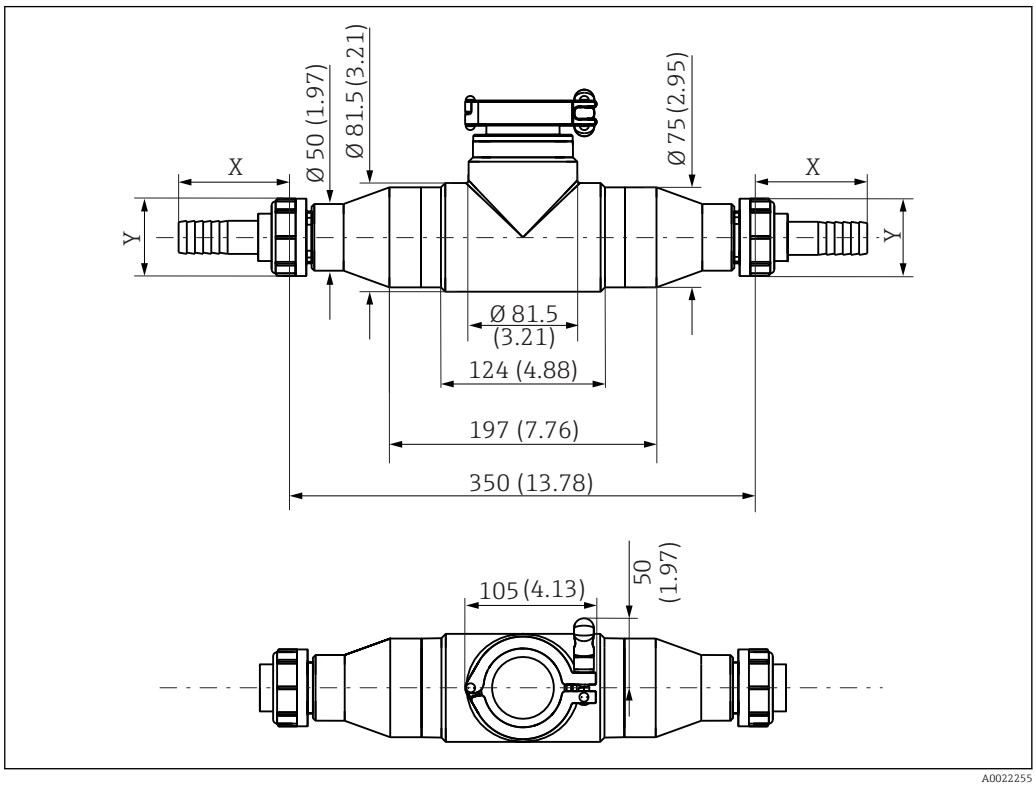

10 Dimensions. Engineering unit: mm (in)

Connections	NPT ¾"	Rp ¾	Glue-in port D 25	ANSI 2"	Hose D 25	Hose D 12	G1 ¾
X mm (in)	70 (2.76)	64 (2.52)	22 (0.87)	71 (2.80)	74 (2.91)	74 (2.91)	0
Y mm (in)	Ø 58(2.28)	Ø 58(2.28)	Ø 58(2.28)	Ø 152 (5.98)	Ø 58(2.28)	Ø 58(2.28)	Ø 58(2.28)

Weight

1.17 kg (2.58 lb) without process connection

Materials

Assembly housing:	PE100 [1]
Seals:	EPDM
Flange:	PP-GF
Dummy cover:	Stainless steel 1.4404 (AISI 316 L)
Bubble trap:	Polycarbonate
Process connections:	PE
Process connection for bubble trap:	PVC
Clamp fitting:	Stainless steel 1.4404 (AISI 316 L)

1) PE 100 material according to DIN 8075. Increased wear possible due to permanently high process temperatures. Alternatively use Flowfit CUA262 in the case of high pressures and temperatures.

Process connections

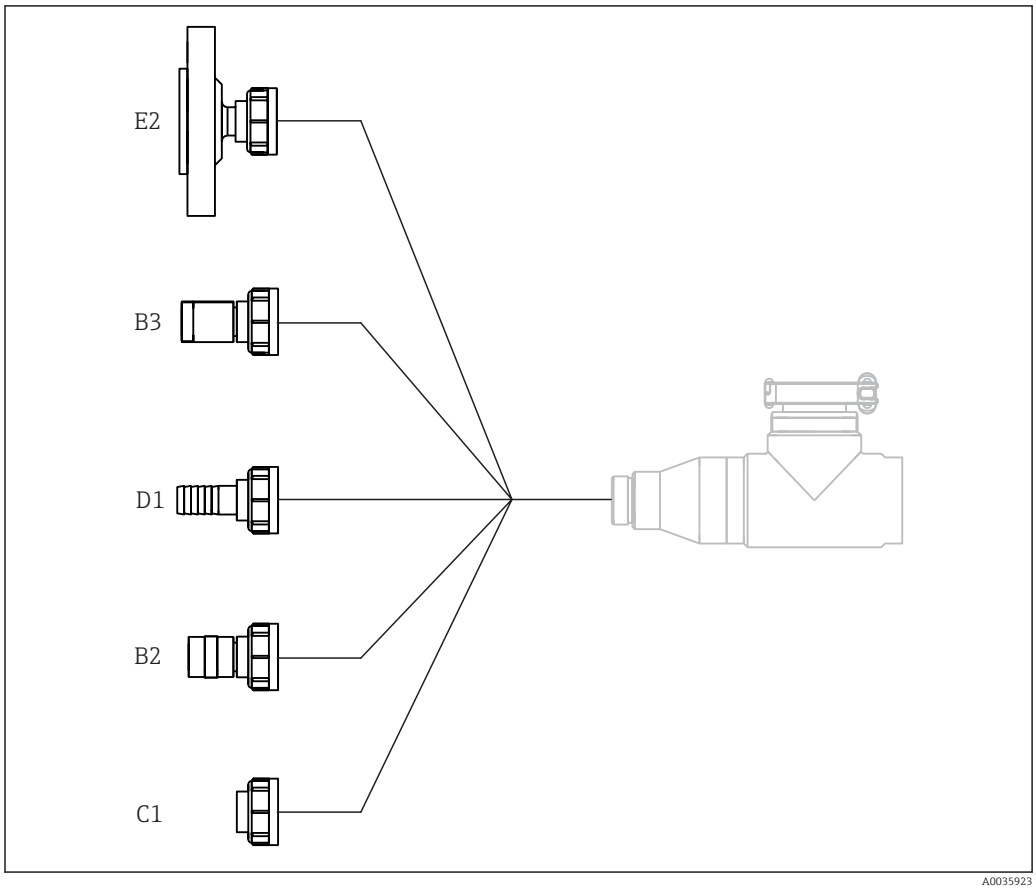

11 Process connections

B2 Internal thread Rp ¾"
B3 Internal thread NPT ¾"
C1 Glue-in port D 25
D1 Hose D 25
E2 Flange ANSI 2"

Use of an external thread G1 ¼ (B1, standard without process adapter) or a D 12 hose (D2) is also possible.

Certificates and approvals

DRGL- 2014/68/EU / PED- 2014/68/EU
The assembly has been manufactured according to good engineering practice as per Article 4, Paragraph 3 of the Pressure Equipment Directive 2014/68/EU and is therefore not required to bear the CE label.

Ordering information

Scope of delivery

The scope of delivery comprises:
- 1 Flowfit CUA252 flow assembly, version as ordered
- 1 clamp seal and locking clamp
- 2 process connections, version as ordered
- 1 set of Operating Instructions

▶ If you have any queries:
Please contact your supplier or local sales center.

Product page www.endress.com/cua252

Product Configurator

On the product page there is a **Configure** button to the right of the product image.

1. Click this button.
   ↳ The Configurator opens in a separate window.
2. Select all the options to configure the device in line with your requirements.
   ↳ In this way, you receive a valid and complete order code for the device.
3. Export the order code as a PDF or Excel file. To do so, click the appropriate button on the right above the selection window.

For many products you also have the option of downloading CAD or 2D drawings of the selected product version. Click the **CAD** tab for this and select the desired file type using picklists.

Accessories

The following are the most important accessories available at the time this documentation was issued.

► For accessories not listed here, please contact your Service or Sales Center.

Description	Order number
Dummy cover for clamp connection; 1 pc	71242180
Adapter, internal thread, RP ¾", material: PE; 1 pc	71242172
Adapter, internal thread, NPT ¾", material: PE; 1 pc	71242173
Adapter, welded connection, D 25, material: PE; 1 pc	71242174
Adapter, hose connection nipple, D 25, material: PE; 1 pc	71242175
Adapter, hose connection nipple, D 12, material: PE; 1 pc	71242176
Adapter, flange ANSI 2", 1 pc	71242177

Ultrasonic cleaning system CYR52
- For attachment to assemblies and pipes
- Product Configurator on the product page: www.endress.com/cyr52

Technical Information TI01153C

Bubble trap
- For the CUS52D sensor
- Process pressure: up to 3 bar (43.5 psi)
- Process temperature: 0 to 50 °C (32 to 122 °F)
- D 12 adapter with connection for degassing line (upper connection on the CUA252) is included in the scope of delivery.
- Orifice plates for the following volume flows:
  - < 60 l/h (15.8 gal/h)
  - 60 to 100 l/h (15.8 to 26.4 gal/h)
  - > 100 l/h (26.4 gal/h)
- The degassing line is fitted with a PVC hose, backpressure hose valve and luer lock adapter.
- Order number, suitable for assembly CUA252 with D 12 hose connection (otherwise upgrade with adapter kit): 71242170

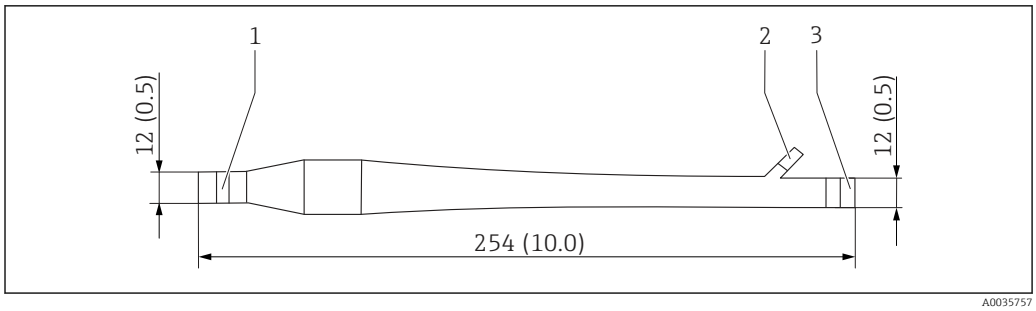

12 Bubble trap. Engineering unit: mm (in)

1 Inlet for medium (without hose system)
2 Outlet for bubbles (hose system is included in scope of delivery)
3 Outlet for medium (without hose system)

Wall mounting kit for CUA252
Order number: 71242171

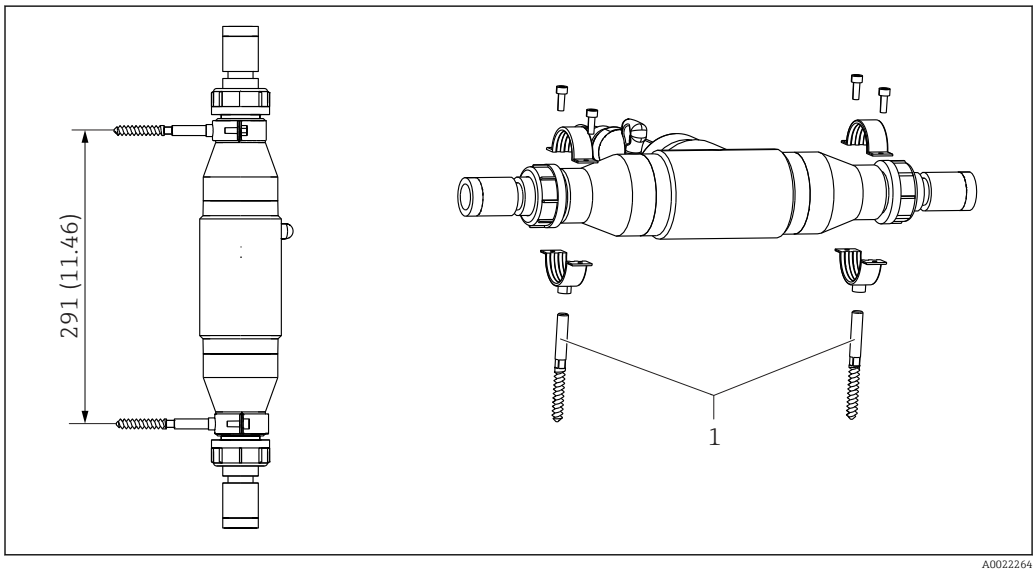

13 Wall mounting kit. Engineering unit: mm (in)

1 Hanger bolt STST 10 x 60 mm (included in scope of delivery)



www.addresses.endress.com

Endress+Hauser

People for Process Automation