FLOWSIC600 DRU-S

Simple and robust upstream gas flow measurement

Simple and robust

- Highly reliable - continuous measurement even under challenging process conditions
- Low initial investment - accurate measurement without expensive flow calibration
- Optimum availability - wear-free operation and remote maintenance
- Long service life - wet gas robust ultrasonic sensors
- Liquid range indicator (optional)
- Easy remote commissioning away from harsh and challenging environmental conditions



Endress+Hauser

People for Process Automation

FLOWSIC600 DRU-S
Simple and robust



Product description

FLOWSIC600 DRU-S is the compact and innovative ultrasonic gas flowmeter for gas production. FLOWSIC600 DRU-S extends the successful product family FLOWSIC600 DRU. The gas meter is especially developed for wellhead and gas lift applications. With a measuring span of up to 150 : 1, flow ranges can be measured with only one device, for which several orifices were previously required.

Its special wet gas robust sensor design ensures continuous measurement even with permanently higher liquid loading. FLOWSIC600 DRU-S enables remote monitoring of measurement and diagnostic data. Thus, the process can be monitored in real time and the maintenance effort can be reduced. Service inspections can be planned according to demand. We think that's intelligent.

At a glance

- Ultrasonic sensors made of titanium
- High measuring span
- No pressure loss - installation without flow conditioner
- Designed for wet gas applications
- Small meter footprint
- Possibility for remote monitoring thanks to digital interfaces
- Simple commissioning via our operating software

Your benefits

- Easy remote commissioning away from harsh and challenging environmental conditions
- Low initial investment - accurate measurement without expensive flow calibration
- Liquid range indicator (optional)
- Maximum availability - near wear-free operation and remote maintenance capabilities
- Highly reliable - continuous measurement even under challenging process conditions
- Long service life - wet gas robust ultrasonic sensors made of titanium

Fields of application

- Natural gas measurement in gas production
- Wellhead measurement
- Gas lift applications
- Gas flow measurement before and after production separators
- Replacement of orifice meters
- Unconventional gas production

More Information online

For more information, enter the link or scan the QR code to get direct access to technical data, operating instructions, software, application examples, and much more.
www.endress.com/flowsic600dru-s

Technical data

The exact device specifications and product performance data may vary and are dependent on the respective application and customer specifications.

FLOWSIC600 DRU-S

Measured values	Volume flow rate a. c., Volume a. c., Gas velocity, Sound velocity
Measurement principle	Ultrasonic transit time difference measurement
Number of measurement paths	2
Measuring medium	Natural gas
Nominal pipe size	2" ... 16"
Measuring ranges	
Volume flow (a.c.)[1, 2]	4 ... 10000 m^3/h (140 ... 353000 ft^3/h) Measuring ranges depend on nominal pipe size and pressure class For more details see "Flow rate table"
Repeatability[3]	±0.2% of the measured value
Accuracy[4]	1% from Q_t to Q_{max} -Typical uncertainty under reference conditions in accordance with IEC 62828-5:2020
	2% from Q_t to Q_{max} - Verified with pipe configurations according to OIML R-137:2012 Annex B (mild)
Gas temperature	−40 ... 100 °C (−40 ... 212 °F) Maximum temperature 120 °C (248 °F) on request
Ambient temperature	−40 ... 60 °C (−40 ... 140 °F)
Operating pressure	0 ... 250 bar(g) (0 ... 3626 psi(g)) for 2" ... 4" 1 ... 250 bar(g) (14.5 ... 3626 psi(g)) for 6" ... 16" Max allowable Design pressure depends on selected pressure class. Lower P_{min} or higher P_{max} values - on request
Min. piping requirements	20D straight inlet and 5D outlet
Liquid range indicator (option)	4 ranges of liquid indication: None <0.1 % LVF (No influence on measurement accuracy) Low 0.1 ... 0.5 % LVF (Decreased accuracy up to 5 %) Medium 0.5 ... 5 % LVF (Decreased accuracy up to 10 %) High >5 % LVF (Average level when temporary signal loss is to be expected)
Flange type / schedule	
ASME B16.5	ANSI CL150 / SCH40 ANSI CL600 / SCH80 ANSI CL900 / SCH80 ANSI CL1500 / XXS for sizes 2...6" and SCH160 for 8...16" Others on request
Flange face	
ASME B16.5	ANSI CL150/CL600 Raised Face ANSI CL900/CL1500 RTJ Others on request
Material	
Meter body	LTCS: ASTM A350 Gr. LF2 / 1.0571
SPU (electronics) housing	Aluminum (copper-free)

Ex-approvals	
IECEx	Ex d e ib [ia Ga] IIA T4 Ga/Gb Ex d e ib [ia Ga] IIC T4 Ga/Gb Ultrasonic transducer, intrinsically safe
ATEX	II 1/2 (1) G Ex ia/db eb ia [ia Ga] IIA/IIB/IIC T4 ...T1 Ga/Gb II 1/2 (1) G Ex ia/db eb ia [ia Ga] IIC T6 Ga/Gb Ultrasonic transducer, intrinsically safe
NEC/CEC	Class I, Div. 1, Groups B and C and D T4 Provide Intrinsically Safe Output for Class I, Div.1, Groups B and C and D Class I, Div. 2, Groups A, B, C and D, T4 Provide Intrinsically Safe Output for Class I, Div.2, Groups A, B, C and D Class I, Div. 1, Group D T4 Provide Intrinsically Safe Output for Class I, Div. 1, Group D Class I, Div. 2, Group D, T4 Provide Intrinsically Safe Output for Class I, Div. 2, Group D USA only: Class I, Zone 1, Group IIB + Hydrogen, T4 Provide Intrinsically Safe Output for Class I, Zone 1, Group IIB + Hydrogen, T4 Class I, Zone 2, Group IIC, IIB, IIA T4 Provide Intrinsically Safe Output for Class I, Zone 2, Group IIC, IIB, IIA
Protection class	IP66 / IP67
Digital outputs	2xFO and 1xDO: 30 V, 10 mA; passive, galvanically isolated, Open Collector, fmax = 6 kHz (scalable)
Interfaces	2xRS485 (for data output, configuration and diagnostics)
BUS protocol	MODBUS ASCII, MODBUS RTU
Dimensions	See dimensional drawings
Weight	See dimensional drawings
Electrical connection	
Voltage	12 V DC ... 28.8 V DC
Power consumption	≤ 1 W
Footnotes	[1] Reduced accuracy below Qmin [2] Q_{max} can be limited by the working pressure and damping effects of the gas medium [3] From Qt to Qmax [4] Detailed technical characteristics available in Operating instruction.

Flow rate

Nominal pipe size	Q_{min} [1]	Q_t	Q_{max} CL150 ... CL900	Q_{max} CL1500[2]
2"	4 (140)	20 (700)	400 (14000)	250 (8800)
3"	8 (280)	40 (1400)	100 (35000)	550 (19500)
4"	13 (460)	65 (2300)	1600 (56000)	1000 (35000)
6"	25 (880)	120 (4240)	2200 (78000)	1200 (42400)
8"	35 (1240)	180 (6360)	3200 (113000)	2200 (78000)
10"	55 (1940)	280 (9900)	4800 (170000)	on request
12"	65 (2300)	320 (11300)	7200 (254000)	
16"	120 (4200)	560 (19800)	10000 (353000)	

[1] Below Q_{min} increasing uncertainty.
[2] Higher Qmax values on request.

Flow rate unit: Metric (Imperial)

Ordering information

Our regional sales organization will help you to select the optimum device configuration.

Dimensional drawings

Sender/receiver unit

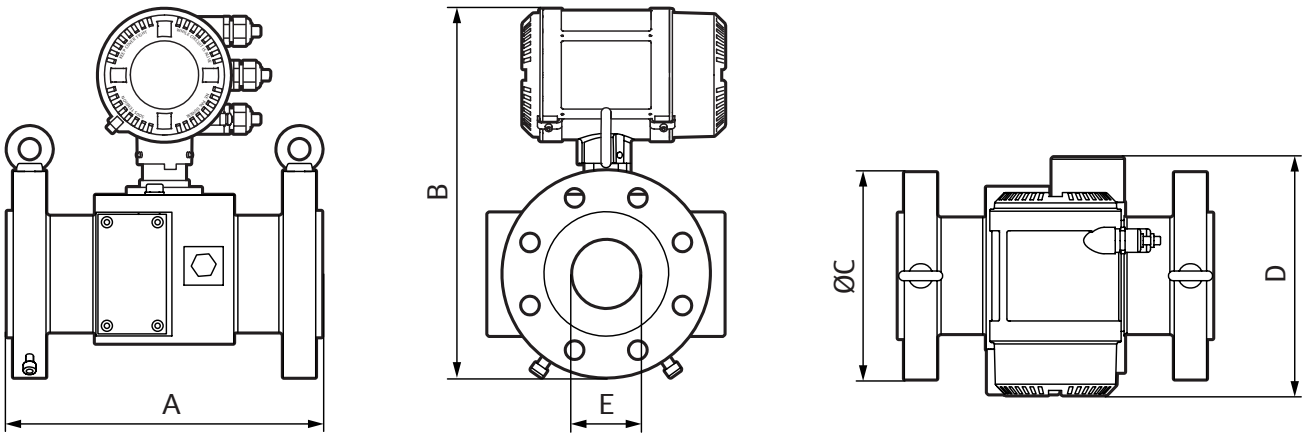

Dimensions and weights

Nominal pipe size	ANSI CL	Dimensions					
		A	B	C	D	E	Weight
2"	150	250 (9.8)	327 (12.8)	152 (6.0)	228 (9.0)	53 (2.1)	30 (66.1)
	600	250 (9.8)	335 (13.9)	165 (6.5)	228 (9.0)	49 (1.9)	34 (75.0)
	1500	300 (11.8)	357 (14.0)	216 (8.5)	229 (9.0)	38 (1.5)	50 (110.2)
3"	150	320 (12.6)	365 (14.3)	191 (7.5)	241 (9.5)	78 (3.1)	46 (101.4)
	600	320 (12.6)	375 (14.8)	210 (8.2)	241 (9.5)	74 (2.9)	46 (101.4)
	900	400 (15.7)	388 (15.3)	241 (9.5)	241 (9.5)	74 (2.9)	75 (165.3)
	1500	400 (15.7)	395 (15.5)	267 (10.5)	267 (10.5)	58 (2.3)	85 (187.4)
4"	150	300 (11.8)	377 (14.8)	229 (9.0)	274 (10.8)	102 (4.0)	65 (143.3)
	600	300 (11.8)	400 (15.7)	273 (10.7)	274 (10.8)	97 (3.8)	66 (145.5)
	900	400 (15.7)	411 (16.2)	292 (11.5)	274 (10.8)	97 (3.8)	90 (198.4)
	1500	400 (15.7)	411 (16.2)	311 (12.2)	311 (12.2)	80 (3.1)	95 (209.4)
6"	150	450 (17.7)	454 (17.9)	279 (11.0)	313 (12.3)	154 (6.1)	110 (242.5)
	600	450 (17.7)	492 (19.3)	356 (14.0)	356 (14.0)	146 (5.7)	150 (330.7)
	900	600 (23.6)	504 (19.9)	380 (15.0)	380 (15.0)	146 (5.7)	185 (407.9)
	1500	600 (23.6)	511 (20.1)	394 (15.5)	394 (15.5)	124 (4.9)	240 (529.1)
8"	150	600 (23.6)	499 (19.6)	343 (13.5)	358 (14.1)	203 (8.0)	150 (330.7)
	600	600 (23.6)	537 (21.1)	419 (16.5)	419 (16.5)	194 (7.6)	220 (485.0)
	900	600 (23.6)	554 (21.8)	470 (18.5)	467 (18.4)	194 (7.6)	270 (595.2)
	1500	600 (23.6)	571 (22.4)	485 (19.1)	485 (19.1)	173 (6,8)	360 (793.6)

All Dimensions in mm (inch) or kg (lbs)

Dimensions and weights

Nominal pipe size	ANSI CL	Dimensions					
		A	B	C	D	E	Weight
10"	150	750 (29.5)	573 (22.5)	406 (16.0)	406 (16.0)	254 (10)	210 (463.0)
	600	750 (29.5)	614 (24.2)	508 (20)	508 (20)	242 (9.5)	350 (771.6)
	900	750 (29.5)	633 (24.9)	546 (21.5)	546 (21.5)	242 (9.5)	410 (903.9)
12"	150	900 (35.4)	629 (24.8)	485 (19.1)	485 (19.1)	303 (11.9)	370 (815.7)
	600	900 (35.4)	666 (26.2)	559 (22.0)	559 (22.0)	289 (11.4)	490 (1080.3)
	900	900 (35.4)	691 (27.2)	610 (24.0)	610 (24.0)	289 (11.4)	610 (1344.8)
16"	150	762 (30)	720 (28.3)	597 (23.5)	597 (23.5)	381 (15)	380 (837.7)
	600	762 (30)	764 (30.1)	685 (27.0)	685 (27.0)	363 (14.3)	600 (1322.8)

All Dimensions in mm (inch) or kg (lbs)

Instruction for installation

Unidirectional installation

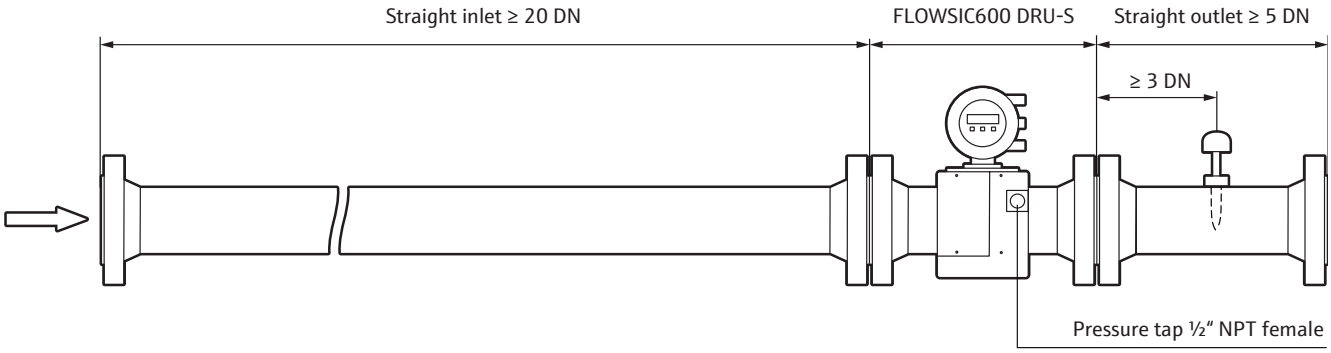

Bidirectional installation

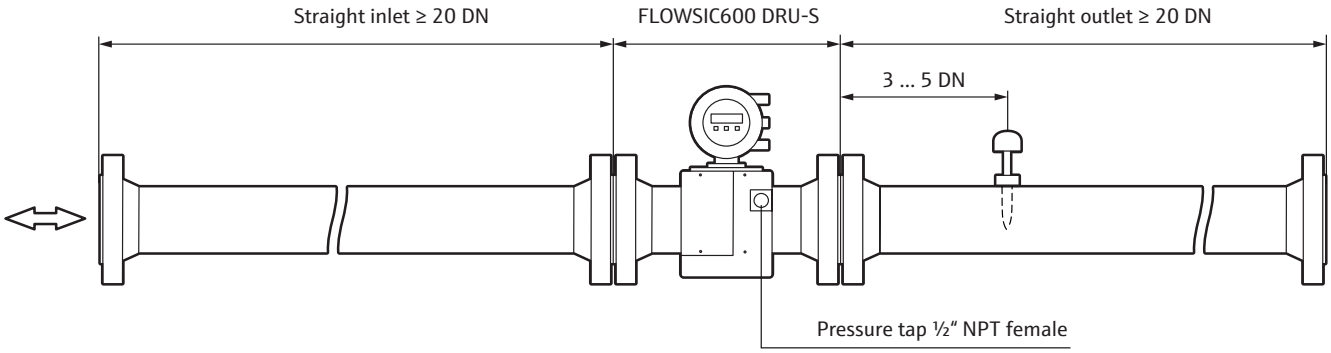

www.addresses.endress.com

Eco-friendly produced and printed on paper
from sustainable forestry.

IN01398D/90/EN/02.26-00
8029744 / EN / V4-0

Endress+Hauser

People for Process Automation