BA00419C/07/EN/17.18
71407648
2018-06-14

Operating Instructions
Chloromax CCS142D

Digital sensor with Memosens technology for determining free chlorine

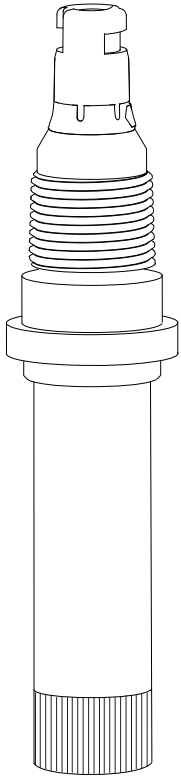

Endress+Hauser
People for Process Automation

Table of contents

1 About this document 4
1.1 Warnings 4
1.2 Symbols used 4

2 Basic safety instructions 6
2.1 Requirements for personnel 6
2.2 Designated use 6
2.3 Workplace safety 6
2.4 Operational safety 7
2.5 Product safety 7

3 Product description 8
3.1 Product design 8

4 Incoming acceptance and product identification 12
4.1 Incoming acceptance 12
4.2 Product identification 12

5 Installation 14
5.1 Installation conditions 14
5.2 Mounting the sensor 16
5.3 Post-installation check 18

6 Electrical connection 19
6.1 Connecting the sensor 19
6.2 Ensuring the degree of protection 19
6.3 Post-connection check 19

7 Commissioning 21
7.1 Function check 21
7.2 Sensor polarization 21
7.3 Sensor calibration 21

8 Diagnostics and troubleshooting 23

9 Maintenance 25
9.1 Maintenance schedule 25
9.2 Maintenance tasks 25

10 Repair 31
10.1 Spare parts 31
10.2 Return 31
10.3 Disposal 31

11 Accessories 32
11.1 Device-specific accessories 32

12 Technical data 33
12.1 Input 33
12.2 Performance characteristics 34
12.3 Environment 35
12.4 Process 35
12.5 Mechanical construction 36

13 Installation and operation in hazardous environment Class I Div. 2 36

Index 38

1 About this document

1.1 Warnings

Structure of information	Meaning
⚠ DANGER **Causes (/consequences)** If necessary, Consequences of non-compliance (if applicable) ▶ Corrective action	This symbol alerts you to a dangerous situation. Failure to avoid the dangerous situation **will** result in a fatal or serious injury.
⚠ WARNING **Causes (/consequences)** If necessary, Consequences of non-compliance (if applicable) ▶ Corrective action	This symbol alerts you to a dangerous situation. Failure to avoid the dangerous situation **can** result in a fatal or serious injury.
⚠ CAUTION **Causes (/consequences)** If necessary, Consequences of non-compliance (if applicable) ▶ Corrective action	This symbol alerts you to a dangerous situation. Failure to avoid this situation can result in minor or more serious injuries.
NOTICE **Cause/situation** If necessary, Consequences of non-compliance (if applicable) ▶ Action/note	This symbol alerts you to situations which may result in damage to property.

1.2 Symbols used

Symbol	Meaning
	Additional information, tips
	Permitted or recommended
	Not permitted or not recommended
	Reference to device documentation
	Reference to page
	Reference to graphic
	Result of a step

1.2.1 Symbols on the device

Symbol	Meaning
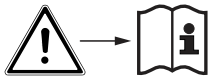	Reference to device documentation

2 Basic safety instructions

2.1 Requirements for personnel

Installation, commissioning, operation and maintenance of the measuring system may be carried out only by specially trained technical personnel.

- The technical personnel must be authorized by the plant operator to carry out the specified activities.
- The electrical connection may be performed only by an electrical technician.
- The technical personnel must have read and understood these Operating Instructions and must follow the instructions contained therein.
- Measuring point faults may be repaired only by authorized and specially trained personnel.

Repairs not described in the Operating Instructions provided must be carried out only directly at the manufacturer's site or by the service organization.

2.2 Designated use

Drinking water, process water and bathing water must be disinfected through the addition of appropriate disinfectants such as chlorine gas or inorganic chlorine compounds. The dosing quantity involved must be adapted to continuously fluctuating operating conditions. Too low concentrations in the water could jeopardize the effectiveness of the disinfection process. Too high concentrations can lead to signs of corrosion and have an adverse effect on taste, while also generating unnecessary costs.

The sensor was specifically developed for this application and is designed for continuous measurement of free chlorine in water. In conjunction with measuring and control equipment, it allows optimum control of the disinfection process.

Use of the device for any purpose other than that described, poses a threat to the safety of people and of the entire measuring system and is therefore not permitted.

The manufacturer is not liable for damage caused by improper or non-designated use.

2.2.1 Hazardous environment in accordance with cCSAus NI Cl. I, Div. 2 [1)]

1. The device must be installed in a housing or cabinet that can be accessed only by means of a tool or key.
2. Pay attention to the control drawing and the specified application conditions in the appendix of these Operating Instructions, and follow the instructions.

2.3 Workplace safety

As the user, you are responsible for complying with the following safety conditions:

- Installation guidelines
- Local standards and regulations

1) Only if connected to CM44x(R)-CD*

Electromagnetic compatibility

- The product has been tested for electromagnetic compatibility in accordance with the applicable European standards for industrial applications.
- The electromagnetic compatibility indicated applies only to a product that has been connected in accordance with these Operating Instructions.

2.4 Operational safety

Before commissioning the entire measuring point:

1. Verify that all connections are correct.
2. Ensure that electrical cables and hose connections are undamaged.
3. Do not operate damaged products, and protect them against unintentional operation.
4. Label damaged products as defective.

During operation:

- If faults cannot be rectified:
  products must be taken out of service and protected against unintentional operation.

2.4.1 Special instructions

- Do not operate the sensors under process conditions where it is expected that osmotic conditions will cause electrolyte components to pass through the membrane and into the process.

Use of the sensor for its intended purpose in liquids with a conductivity of at least 10 nS/cm can be classified as electrostatically safe.

2.5 Product safety

The product is designed to meet state-of-the-art safety requirements, has been tested, and left the factory in a condition in which it is safe to operate. The relevant regulations and European standards have been observed.

3 Product description

3.1 Product design

The sensor consists of the following function units:
- Measuring chamber
  - To protect the anode or cathode from the medium
  - With a large volume of electrolyte for a long service life in combination with the large anode and the small cathode
- Sensor shaft with
  - Large anode
  - Cathode embedded in plastic
  - Temperature sensor
- Membrane cap with
  - Robust PTFE membrane
  - Special support grid between cathode and membrane for a specified and constant electrolyte film and thus a relatively constant indication even at varying pressures and flows

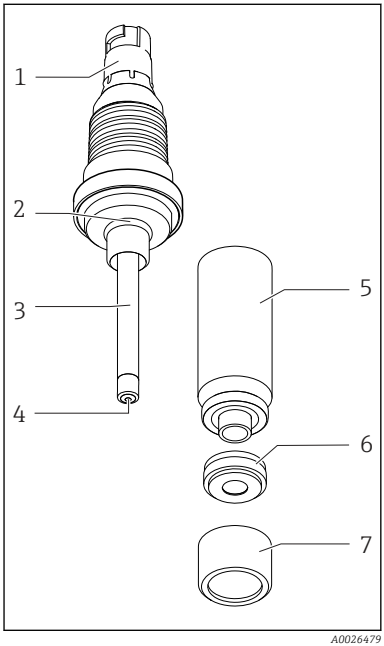

1 *Memosens plug-in head*
2 *O-ring*
3 *Large anode, silver/silver chloride*
4 *Gold cathode*
5 *Measuring chamber*
6 *Membrane cap with dirt-repellent membrane*
7 *Screw cap for securing the membrane cap*

1 Sensor structure

3.1.1 Measuring principle

Free chlorine is determined as hypochlorous acid according to the amperometric measuring principle.

The hypochlorous acid (HOCl) contained in the medium diffuses through the sensor membrane and is reduced to chloride ions (Cl^-) at the gold cathode. At the silver anode, silver is oxidized to silver chloride. Electron donation at the gold cathode and electron acceptance at the silver anode causes a current to flow which is in proportion to the concentration of free chlorine in the medium at constant conditions.

The concentration of hypochlorous acid depends on the pH value. This dependency can be compensated for by measuring the pH value in the flow assembly.

The transmitter uses the current signal to calculate the measured variable for concentration in mg/l.

3.1.2 Effects on the measuring signal

pH value

pH-dependency

Molecular chlorine (Cl_2) is present at pH values < 4. Consequently, hypochlorous acid (HOCl) and hypochlorite (OCl^- remain within the range of pH 4 to 11 as components of free chlorine. As hypochlorous acid splits up (dissociates) with an increasing pH value to form hypochlorite ions (OCl^-) and hydrogen ions (H^+), the amounts of the individual components of free effective chlorine change with the pH value. For example, if the proportion of hypochlorous acid is 97 % at pH 6, it drops to approx. 3 % at pH 9.

For amperometric measurement using the chlorine sensor, only the amount of hypochlorous acid is selectively measured. This works as a powerful disinfectant in a watery solution. In contrast to this, hypochlorite is an extremely weak disinfectant. Therefore, when used as a disinfectant at higher pH values, the effectiveness of chlorine is limited. As hypochlorite ions cannot permeate the sensor membrane, the sensors do not record this value.

pH compensation of chlorine sensor signal

To calibrate and verify the chlorine measuring system, a colorimetric reference measurement must be carried out using the DPD method. Free chlorine reacts with diethyl-p-phenylendiamine to form a red dye. The intensity of the red color increases proportionally to the chlorine content. For the DPD test, the sample is buffered to a specified pH value. Therefore, the pH value of the sample is not included in the DPD measurement. Due to the buffer function in the DPD method, all components of free effective chlorine are recorded and thus the total free chlorine is measured.

If pH compensation is switched on in the transmitter, the sum of hypochlorous acid (HOCl) and hypochlorite corresponding to the DPD measurement is calculated from the chlorine sensor's measuring signal that corresponds to hypochlorous acid (HOCl) and by taking into account the pH value in the range of pH 4 to 9. For this calculation, the curve is stored in the transmitter.

When free chlorine is measured with pH compensation switched on, always perform calibration in pH-compensated mode.

When you use pH compensation, the measured chlorine value that is displayed and applied to the device output corresponds to the DPD measured value even if the pH values fluctuate. If you do not use pH compensation, the measured chlorine value corresponds to the DPD measurement only if the pH value remains unchanged compared with the calibration.

Without pH compensation, the chlorine measuring system must be recalibrated when the pH value changes.

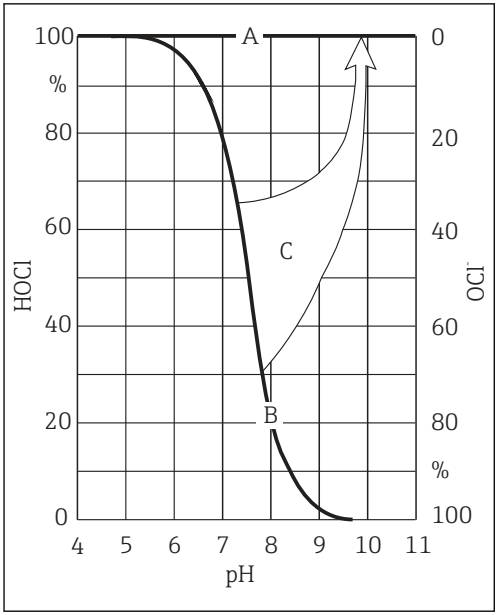

2 *Principle of pH compensation*

A Measured value with pH compensation
B Measured value without pH compensation
C pH compensation

Accuracy of pH compensation

The accuracy of the pH-compensated measured chlorine value is derived from the sum of several individual deviations (chlorine, pH, temperature, DPD measurement etc.).

High levels of hypochlorous acid (HOCl) during chlorine calibration have a positive effect on accuracy, whereas low levels of hypochlorous acid have a negative effect. The inaccuracy of the pH-compensated measured chlorine value increases the greater the pH difference between measuring mode and chlorine calibration or the more inaccurate the underlying individual measured values are.

Calibration taking into account the pH value

For the DPD test, the sample is buffered to a specified pH value. In contrast to this, amperometric measurement determines only the HOCl component.

During operation, pH compensation is effective up to a pH value of 9. However, there is hardly any HOCl left at this pH value, and the measured current is very low. At this point, pH compensation has the effect of increasing the measured HOCl value to the actual value of the

free chlorine. Calibration of the complete measuring system makes sense only if the medium has a pH value up to 8 or 8.2.

Sensor	pH value	HOCl content	Uncompensated value	Compensated value
CCS142D-G	8.2	15 %	12 nA	80 nA
CCS142D-A	8.0	20 %	4 nA	20 nA

Above these pH values, the total error of the measuring system is unacceptably high.

Flow

The minimum flow velocity of the membrane-covered sensor is 15 cm/s (0.5 ft/s).
When using the CCA250 flow assembly, this corresponds to a flow rate of 30 l/h (8 gal/h) (upper edge of float at level of red bar mark).

At higher flow rates, the measuring signal is virtually flow-independent. However, if the flow rate falls below the specified value, the measuring signal depends on the flow.

The installation of an INS proximity switch in the assembly enables reliable detection of this prohibited operating status, thus triggering an alarm or causing the dosing process to be switched off if necessary.

Temperature

Changes in the temperature of the medium affect the measured value:
- Increases in temperature result in a higher measured value (approx. 4 % per K)
- Decreases in temperature result in a lower measured value

Use of the sensor in conjunction with the Liquiline enables automatic temperature compensation (ATC). In this case, the temperature does not need to remain constant, and a recalibration in the event of temperature changes is not required.

1. If automatic temperature compensation is disabled at the transmitter, maintain the temperature following calibration at a constant level.
2. Otherwise, recalibrate the sensor.

4 Incoming acceptance and product identification

4.1 Incoming acceptance

1. Verify that the packaging is undamaged.
   ↳ Notify the supplier of any damage to the packaging.
   Keep the damaged packaging until the issue has been resolved.
2. Verify that the contents are undamaged.
   ↳ Notify the supplier of any damage to the delivery contents.
   Keep the damaged goods until the issue has been resolved.
3. Check that the delivery is complete and nothing is missing.
   ↳ Compare the shipping documents with your order.
4. Pack the product for storage and transportation in such a way that it is protected against impact and moisture.
   ↳ The original packaging offers the best protection.
   Make sure to comply with the permitted ambient conditions.

If you have any questions, please contact your supplier or your local Sales Center.

4.2 Product identification

4.2.1 Nameplate

The nameplate provides you with the following information on your device:
- Manufacturer identification
- Order code
- Extended order code
- Serial number
- Safety information and warnings
- Ex labeling on hazardous area versions

► Compare the information on the nameplate with the order.

4.2.2 Product page

www.endress.com/ccs142d

4.2.3 Interpreting the order code

The order code and serial number of your product can be found in the following locations:
- On the nameplate
- In the delivery papers

Obtaining information on the product

1. Open the product website.
2. Call up the site search (magnifying glass).
3. Enter a valid serial number.

4. Search.
   ↳ The product structure is displayed in a popup window.
5. Click on the product image in the popup window.
   ↳ A new window (**Device Viewer**) opens. All of the information relating to your device is displayed in this window as well as the product documentation.

4.2.4 Manufacturer address

Endress+Hauser Conducta GmbH+Co. KG
Dieselstraße 24
D-70839 Gerlingen

4.2.5 Scope of delivery

The delivery comprises:
- Chlorine sensor with protection cap (ready for use)
- Bottle of electrolyte (50 ml (1.69 fl.oz))
- Replacement cartridge with pretensioned membrane
- Operating Instructions
- Manufacturer's certificate

4.2.6 Certificates and approvals

CE mark

Declaration of Conformity

The product meets the requirements of the harmonized European standards. As such, it complies with the legal specifications of the EU directives. The manufacturer confirms successful testing of the product by affixing to it the CE mark.

EAC

The product has been certified according to guidelines TP TC 004/2011 and TP TC 020/2011 which apply in the European Economic Area (EEA). The EAC conformity mark is affixed to the product.

Ex approvals [2)]

cCSAus NI Cl. I, Div. 2
This product complies with the requirements defined in:
- UL 61010-1
- ANSI/ISA 12.12.01
- FM 3600
- FM 3611
- CSA C22.2 NO. 61010-1
- CSA C22.2 NO. 213
- Control drawing: 401204

2) Only if connected to CM44x(R)-CD*

5 Installation

5.1 Installation conditions

5.1.1 Orientation

Do not install overhead!

- ▶ Install the sensor in an assembly, support or appropriate process connection at an angle of at least 15 ° to the horizontal.
- ▶ Other angles of inclination are not permitted.
- ▶ Follow the instructions for installing the sensor in the Operating Instructions for the assembly being used.

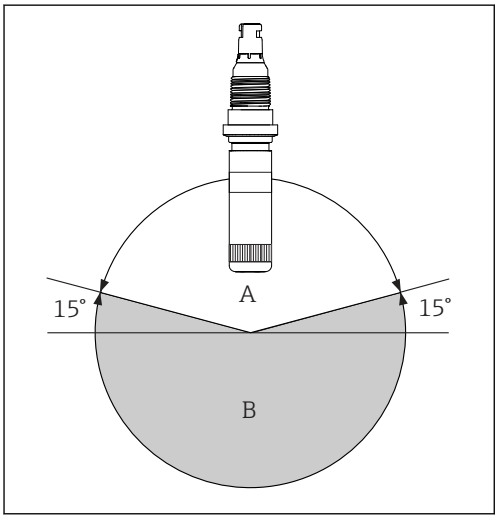

A *Permitted orientation*
B *Forbidden orientation*

5.1.2 Dimensions

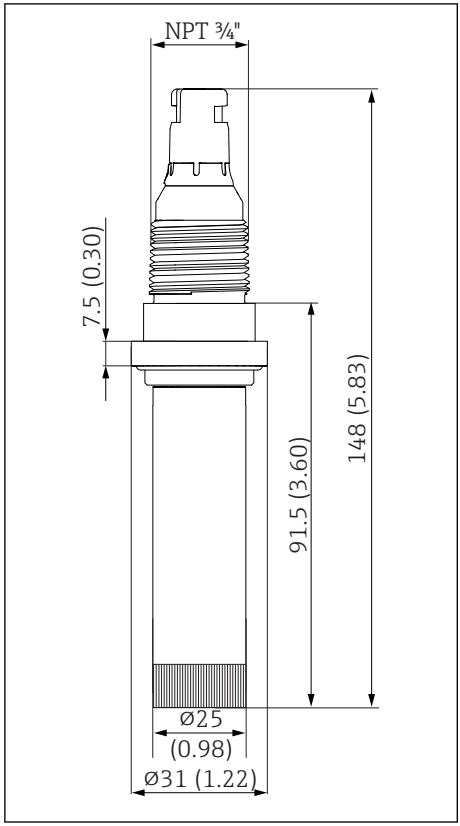

3 Dimensions in mm (in)

5.2 Mounting the sensor

5.2.1 Measuring system

A complete measuring system comprises:
- Chlorine sensor Chloromax CCS142D
- Assembly, e. g. Flowfit CCA250
- Measuring cable CYK10
- Transmitter, e. g. Liquiline CM44x or CM44xR
- Optional:
  - Extension cable CYK11
  - When using assembly CCA250: additional sensor(s), e. g. pH sensor CPS31D

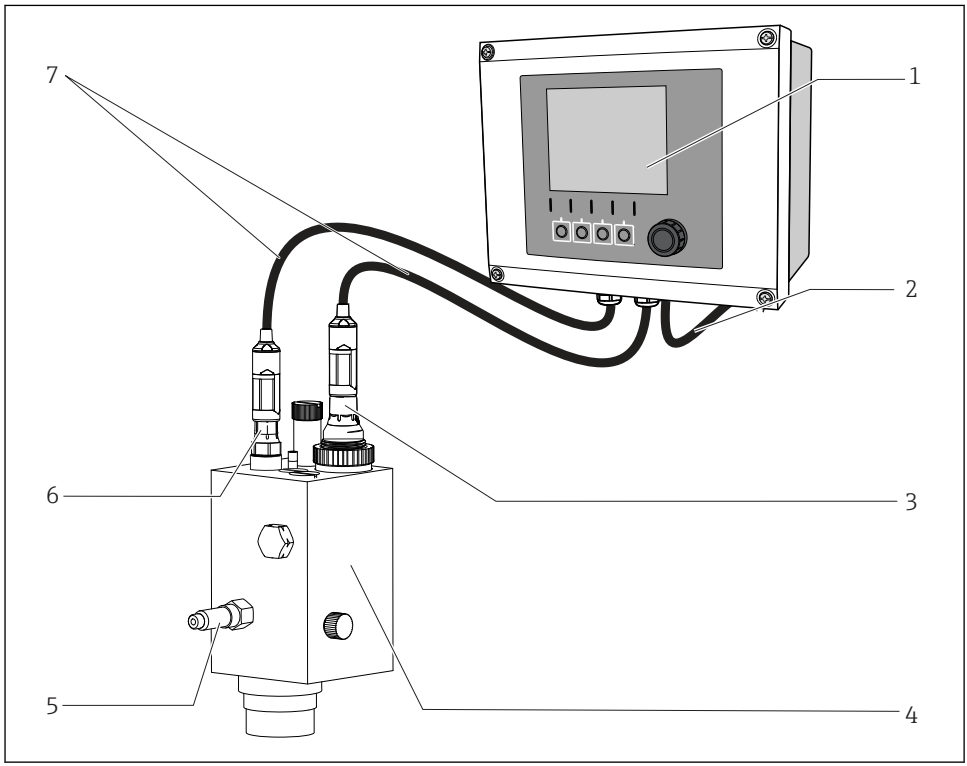

4 *Example of a measuring system*

1 Transmitter Liquiline CM44x
2 Power cable for transmitter
3 Chlorine sensor CCS142D
4 Assembly Flowfit CCA250
5 Inlet to assembly (outlet on rear, not shown in graphic)
6 pH sensor CPS31D
7 Measuring cable CYK10

5.2.2 Preparing the sensor

Removing protection cap from sensor

1. When supplied to the customer and when in storage, the sensor is fitted with a protection cap: First release just the top part of the protection cap by turning it.

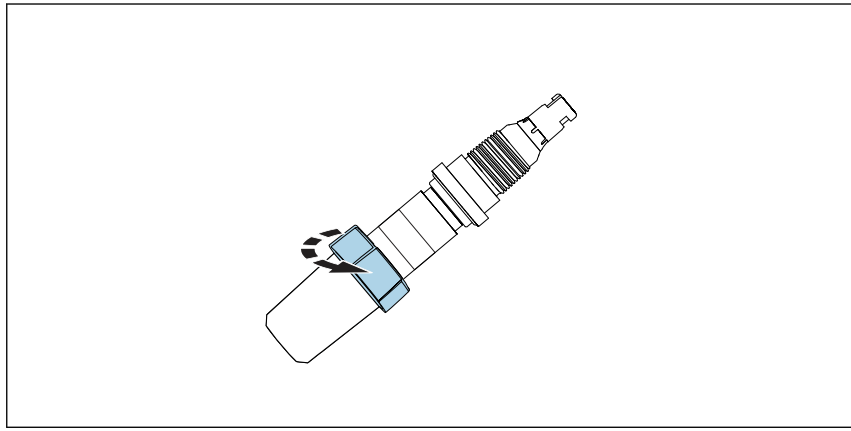

5 Releasing top part of protection cap by turning

2. Carefully remove protection cap from sensor.

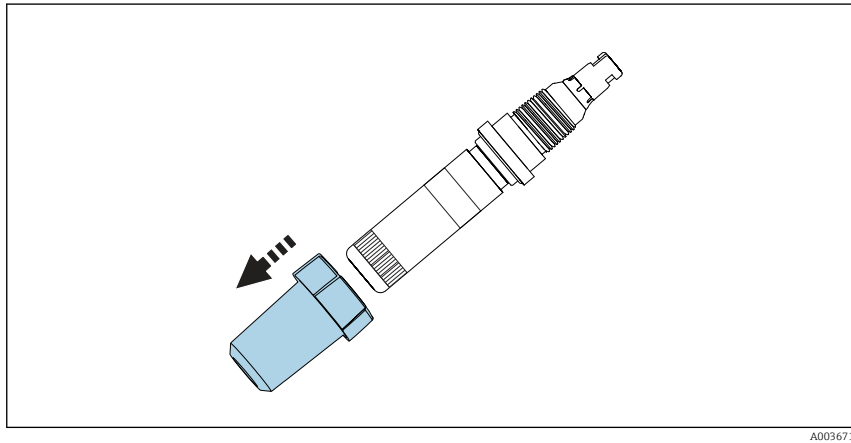

6 Carefully remove protection cap.

5.2.3 Installing sensor in assembly CCA250

The Flowfit CCA250 flow assembly is designed for installing the sensor. It allows a pH and ORP sensor to be installed, in addition to the chlorine or chlorine dioxide sensor. A needle valve controls the flow rate in the range of 30 to 120 l/h (7.9 to 30 gal/h).

Please note the following during installation:
- The flow rate must be at least 30 l/h (7.9 gal/h). If the flow drops below this value or stops completely, this can be detected by an inductive proximity switch and used to trigger an alarm with locking of the dosage pumps.
- If the medium is fed back into an overflow basin, pipe or similar, the resulting counterpressure on the sensor may not exceed 1 bar (14.5 psi) and must remain constant.
- Negative pressure at the sensor e. g. caused by feedback of the medium to the suction side of a pump, must be avoided.

Additional installation instructions can be found in the Operating Instructions for the assembly.

5.2.4 Installing sensor in other flow assemblies

When using other flow assemblies, please ensure the following:
- The flow velocity against the membrane is always at least 15 cm/s (0.49 ft/s).
- The flow direction is upwards so that transported air bubbles are removed and do not collect in front of the membrane.
- The membrane is struck directly by the flow.

5.2.5 Installing sensor in immersion assembly CYA112

Alternatively, the sensor can be installed in an immersion assembly with threaded connection NPT ¾", e. g. CYA112.

Please note the following during installation:
- Hold the sensor securely in position and screw the assembly onto the sensor so that it is handtight. This prevents the cable from twisting and rupturing.
- To improve the sealing effect, we recommend you wrap a thin PTFE tape around the thread for assemblies with an NPT ¾" thread.

Additional installation instructions can be found in the Operating Instructions for the assembly.

5.3 Post-installation check

1. Check the membrane to ensure it is sealed and undamaged.
   ↳ Replace if necessary.
2. Is the sensor installed in an assembly and not suspended from the cable?
   ↳ The sensor may be installed only in an assembly or directly via the process connection.

6 Electrical connection

⚠ CAUTION

Device is live

Incorrect connection may result in injury!

- The electrical connection may be performed only by an electrical technician.
- The electrical technician must have read and understood these Operating Instructions and must follow the instructions contained therein.
- **Prior** to commencing connection work, ensure that no voltage is present on any cable.

6.1 Connecting the sensor

The electrical connection simulator to the transmitter is established using measuring cable CYK10.

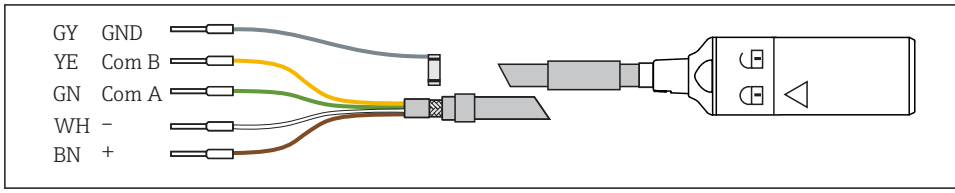

7 Measuring cable CYK10

- To extend the cable, use measuring cable CYK11. The maximum cable length is 100 m (328 ft).

6.2 Ensuring the degree of protection

Only the mechanical and electrical connections which are described in these instructions and which are necessary for the required, designated use, may be carried out on the device delivered.

- Exercise care when carrying out the work.

Otherwise, the individual types of protection (Ingress Protection (IP), electrical safety, EMC interference immunity) agreed for this product can no longer be guaranteed due, for example to covers being left off or cable (ends) that are loose or insufficiently secured.

6.3 Post-connection check

Device condition and specifications	Notes
Are the sensor, assembly, or cables free from damage on the outside?	Visual inspection
Electrical connection	**Notes**
Are the mounted cables strain-relieved and not twisted?	
Is a sufficient length of the cable cores stripped, and are the cores positioned in the terminal correctly?	Check the fit (by pulling gently)

Device condition and specifications	Notes
Are all the screw terminals properly tightened?	Tighten
Are all cable entries mounted, tightened and leak-tight?	For lateral cable entries, make sure the cables loop downwards to allow water to drip off
Are all cable entries installed downwards or mounted laterally?	

7 Commissioning

7.1 Function check

Prior to initial commissioning, ensure that:
- The sensor is correctly installed
- The electrical connection is correct.
- There is sufficient electrolyte in the membrane cap and the transmitter is not displaying a warning about electrolyte depletion.

Please note the information on the safety data sheet to ensure safe use of the electrolyte.

WARNING

Escaping process medium

Risk of injury from high pressure, high temperatures or chemical hazards
- ▶ Before applying pressure to an assembly with cleaning system, ensure that the system has been connected correctly.
- ▶ Do not install the assembly in the process if you cannot reliably establish the correct connection.

7.2 Sensor polarization

The voltage applied between cathode and anode by the transmitter polarizes the surface of the working electrode. Therefore, after switching on the transmitter with the sensor connected, you must wait until the polarization period has elapsed before starting calibration.

To achieve a stable display value, the sensor requires the following polarization periods:

First commissioning

CCS142D-A	60 min.
CCS142D-G	90 min.

Recommissioning

CCS142D-A	30 min.
CCS142D-G	45 min.

7.3 Sensor calibration

Reference measurement according to the DPD method

To calibrate the measuring system, carry out a colorimetric comparison measurement in accordance with the DPD method. Chlorine reacts with diethyl-p-phenylendiamine (DPD) producing a red dye, the intensity of the red color being proportional to the chlorine content. Measure the intensity of the red color using a photometer (e. g. PF-3 → 32) . The photometer indicates the chlorine content.

Prerequisites

The sensor reading is stable (no drifts or unsteady values for at least 5 minutes). This is normally guaranteed once the following preconditions have been met:

- The polarization period has elapsed.
- The flow is constant and within the correct range.
- The sensor and the medium are at the same temperature.
- The pH value is within the permitted range.

Zero point adjustment

A zero point adjustment is not required due to the zero point stability of the membrane-covered sensor.
However, a zero point adjustment can be performed if desired.

1. To perform a zero point adjustment, operate the sensor for at least 15 min in chlorine-free water, using the assembly or protection cap as a vessel.
2. Alternatively, perform the zero point adjustment using the zero point gel COY8→ 🖹 32.

Slope calibration

Always perform a slope calibration in the following cases:

- After replacing membrane
- After replacing electrolyte

1. Ensure that the pH value and temperature of the medium are constant.
2. Take a sample for the DPD measurement. This must be done in close proximity to the sensor. Use the sampling tap if available.
3. Determine the chlorine content using the DPD method.
4. Enter the measured value into the transmitter (see Operating Instructions for transmitter).
5. To ensure greater accuracy, check the calibration several hours or 24 hours later using the DPD method.

8 Diagnostics and troubleshooting

When troubleshooting, you must take account of the entire measuring system. This comprises:
- Transmitter
- Electrical connections and lines
- Assembly
- Sensor

The possible causes of error in the following table refer primarily to the sensor. Before commencing troubleshooting, ensure that the following operating conditions have been met:
- Constant pH value after calibration, not required for measurement in "pH-compensated" mode
- Constant temperature after calibration, not required for measurement in "temperature-compensated" mode
- Medium flow rate of at least 30 l/h (7.9 gal/h) (red bar mark when using the CCA250 flow assembly)
- No use of organic chlorination agents

If the value measured by the sensor differs significantly from that of the DPD method, you should first consider all possible malfunctions of the photometric DPD method (see Operating Instructions for photometer). If necessary, repeat the DPD measurement several times.

Error	Possible cause	Remedy
No display, no sensor current	No supply voltage at the transmitter	▶ Establish mains connection
	Connection cable between sensor and transmitter interrupted	▶ Establish cable connection
	Measuring chamber is not filled with electrolyte	▶ Fill measuring chamber (→ 26)
	No input flow of medium	▶ Establish flow, clean filter
Display value too high	Polarization of the sensor not yet completed	▶ Wait for polarization to be completed
	Membrane defective	▶ Replace membrane cap
	Shunt resistance (e. g. moisture contact) in the sensor shaft	▶ Open measuring chamber, rub gold cathode dry. If the transmitter display does not return to zero, there is a shunt present.
	Foreign oxidants interfering with sensor	▶ Examine medium, check chemicals

Error	Possible cause	Remedy
Display value too low	Measuring chamber not completely tightened	▶ Fully tighten measuring chamber or screw cap
	Membrane soiled	▶ Clean membrane
	Air bubble in front of membrane	▶ Release air bubble
	Air bubble between cathode and membrane	▶ Open measuring chamber, top up electrolyte, tap
	Input flow of medium too low	▶ Establish correct flow (→ 🖹 9)
	Foreign oxidants interfering with DPD reference measurement	▶ Examine medium, check chemicals.
	Use of organic chlorination agents	▶ Use agents according to DIN 19643 (water may need to be replaced beforehand)
Display fluctuates considerably	Hole in membrane	▶ Replace membrane cap
	External voltage in medium	▶ Measure voltage between the PMC pin and the protective ground of the measuring device (both AC and DC ranges). For values greater than approx. 0.5 V, find and eliminate external cause

9 Maintenance

Please note the information on the safety data sheet to ensure safe use of the electrolyte.

Take all the necessary precautions in time to ensure the operational safety and reliability of the entire measuring system.

NOTICE

Effects on process and process control!

- When carrying out any work on the system, bear in mind any potential impact this could have on the process control system and the process itself.
- For your own safety, only use genuine accessories. With genuine parts, the function, accuracy and reliability are also ensured after maintenance work.

9.1 Maintenance schedule

1. Check the measurement at regular intervals; depending on the prevailing conditions, **at least once a month**.
2. Clean the sensor if the membrane is visibly soiled ((→ 25)).
3. Replace the electrolyte **once per season or every 12 months** or depending on the chlorine content on site.
4. Calibrate the sensor if desired or when necessary ((→ 21)).

9.2 Maintenance tasks

9.2.1 Cleaning the sensor

CAUTION

Diluted hydrochloric acid

Hydrochloric acid causes irritation if it comes into contact with the skin or eyes.

- When using diluted hydrochloric acid, wear protective clothing such as gloves and goggles.
- Avoid splashes.

NOTICE

Chemicals that reduce surface tension

Chemicals that reduce surface tension can penetrate the sensor membrane and cause measuring errors due to clogging.

- Do not use any chemicals that reduce surface tension.

If the membrane is visibly soiled, proceed as follows:

1. Remove sensor from flow assembly.
2. Clean the membrane mechanically only, using a gentle water jet. Alternatively, place it for several minutes in 1 to 5% hydrochloric acid without any further chemical additives.
3. If cleaning in hydrochloric acid, rinse off the hydrochloric acid with plenty of water.

9.2.2 Replacing the membrane

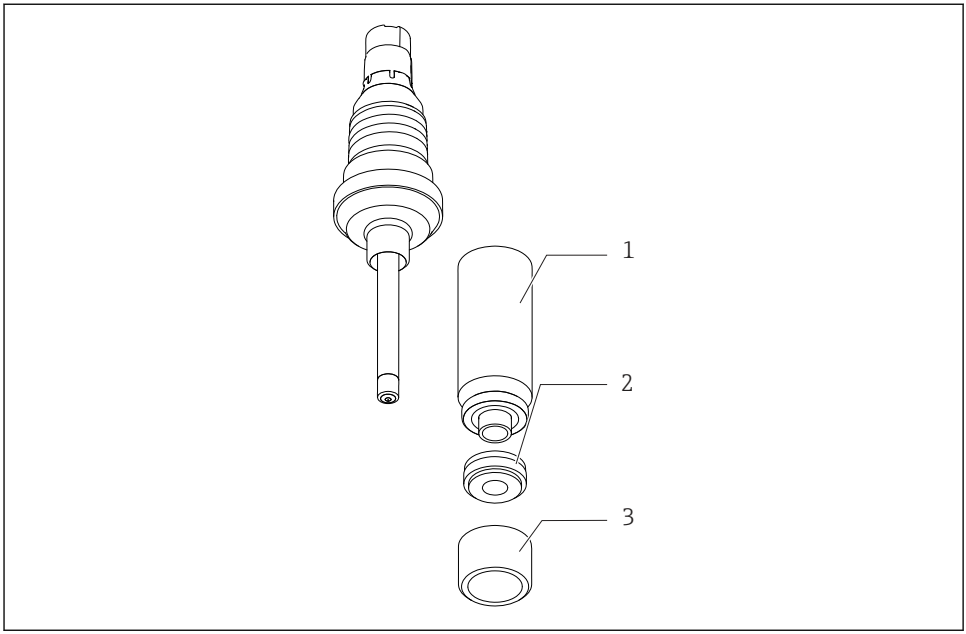

1. Unscrew the measuring chamber (1).
2. Unscrew the front screw cap (3).
3. Remove the membrane cap (2) and replace it with a CCY14-WP replacement cartridge.
4. Refill the measuring chamber with electrolyte CCY14-F(→ 26).

9.2.3 Refilling the electrolyte

NOTICE

Damage to membrane and electrodes, air bubbles

Possibility of measuring errors to complete failure of the measuring point

- Do not touch the membrane or electrodes. Avoid damaging them.
- The electrolyte is chemically neutral and is not hazardous to health. Nonetheless, do not swallow it and avoid contact with eyes.
- Keep the electrolyte bottle closed after use. Do not transfer electrolyte to other vessels.
- Do not store electrolyte for longer than 2 years. The electrolyte must not be yellow in color. Observe the use-by date on the label.
- Avoid air bubbles when pouring electrolyte into the membrane cap.

Refilling the electrolyte:

1. Unscrew the measuring chamber from the shaft.
2. Hold the measuring chamber at an angle and pour in approx. 7 to 8 ml (0.24 to 0.27 fl.oz) of electrolyte, up to the internal thread.

3. Tap the filled chamber several times against a flat surface so that adherent air bubbles on the inside can detach and rise.
4. Insert the sensor shaft vertically into the measuring chamber.
5. Slowly tighten the measuring chamber to the stop. While tightening, excess electrolyte is forced out at the bottom of the sensor.
6. If necessary, use a cloth to wipe the measuring chamber and screw cap dry.

9.2.4 Storing the sensor

During short-term interruptions to measurement:

1. If the assembly is guaranteed not to empty out,
   you may leave the sensor in the flow assembly.
2. If there is a possibility that the assembly may empty out,
   Remove sensor from assembly .

During longterm interruptions to measurement, particularly if dehydration is possible:

1. Remove sensor from assembly .
2. Drain the sensor.
3. Rinse the measuring chamber and the electrode shaft with cold water and leave to dry.
4. Screw the sensor down loosely and not to the stop, to ensure that the membrane remains slack.
5. When recommissioning the sensor, proceed according to the "Commissioning" ((→ 21)) section.

Fit protection cap on sensor.

1. To keep the membrane moist after the sensor has been removed, refill the protection cap with electrolyte or clean water.

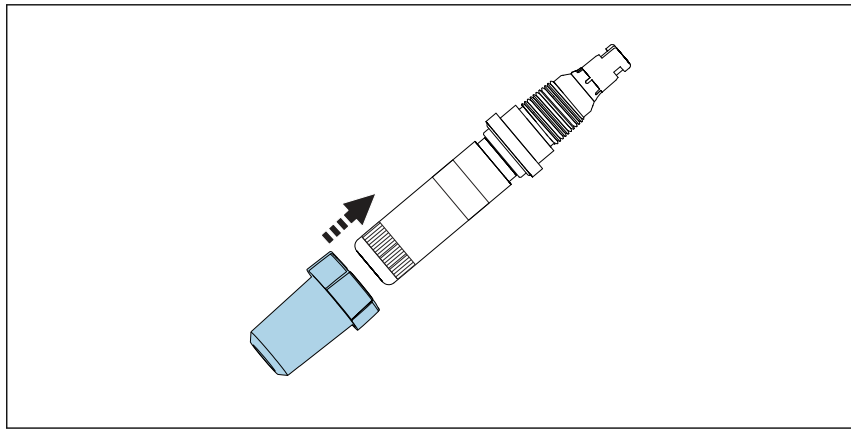

8 Carefully slide protection cap onto the membrane cap.

2. Top part of protection cap is in the open position.
   Carefully slide protection cap onto the membrane cap.
3. Secure protection cap by rotating the top part of the protection cap.

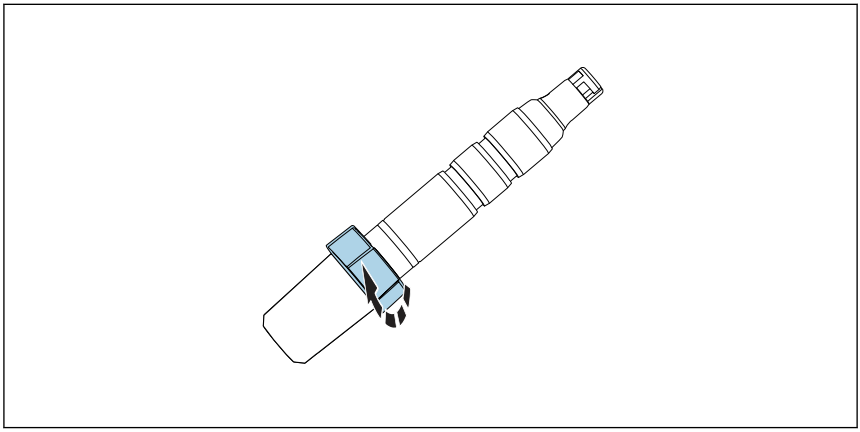

9 Securing protection cap by rotating the top part

9.2.5 Regenerating the sensor

During measurement, the electrolyte in the sensor is gradually exhausted due to chemical reactions. The gray-brown silver chloride layer that is applied to the anode at the factory continues to grow during sensor operation. However, this has no effect on the reaction taking place at the cathode.

A change in the color of the silver chloride layer indicates an effect on the reaction that is taking place. Carry out a visual inspection to ensure that the gray-brown color of the anode has not changed. If the color of the anode has changed, e.g. if it is spotted, white or silvery, the sensor must be regenerated.

► Send the sensor to the manufacturer for regeneration.

9.2.6 Reconditioning the sensor

Longterm operation of the sensor (> 3 months) in a chlorine-free medium, i.e. with very low sensor currents, may lead to deactivation of the sensor. This deactivation is a continuous process that results in a lower slope and longer response times. After long-term operation in a chlorine-free medium, the sensor can be reconditioned.

The following materials are required for reconditioning:
- Deminieralized water
- Polishing sheet (see "Accessories",)
- Beaker
- Pour approx. 100 ml (3.38 fl.oz) of chlorine bleach lye NaOCl, approx. 13 %, pharmaceutical quality (available at chemical stores or pharmacies)

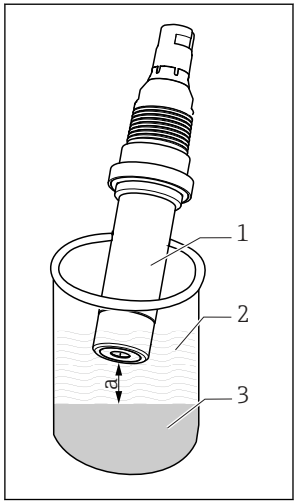

1 Sensor
2 Gaseous phase of chlorine bleach lye
3 Chlorine bleach lye
a Distance between sensor and liquid, 5 to 10 mm (0.2 to 0.4 in)

1. Close the medium inlet and outlet and make sure that no medium can escape from the assembly.
2. Remove sensor from assembly .
3. Unscrew measuring chamber and set aside.
4. Polish the sensor's gold cathode using the polishing sheet: Place a wetted strip of the sheet in your hand, polish the gold cathode on the strip using circular movements, and rinse the sensor with deionized water.
5. If necessary:
   Top up the electrolyte in the measuring chamber and screw the measuring chamber back onto the sensor shaft.
6. Fill the beaker to approx. 10 mm (0.4 in) with chlorine bleach lye and put in a safe place.
7. The sensor must not touch the liquid.
   Place the sensor in the gaseous phase approx. 5 to 10 mm (0.2 to 0.4 in) above the chlorine bleach lye.
   ↳ The sensor current will now increase. The absolute value and the speed of increase depend on the temperature of the chlorine bleach lye.
8. When the sensor current has reached a value of several hundred nA:
   Leave the sensor in this position for approx. 20 min..
9. If the value of several hundred nA is not reached:
   Cover the beaker to avoid a rapid exchange of air.
10. Once the 20 min. have elapsed, re-install the sensor in the assembly.
11. Open the medium inlet and outlet again.
    ↳ The sensor current will now normalize.

After allowing sufficient settling time (no noticeable drift), calibrate the measuring chain.

10 Repair

10.1 Spare parts

For more detailed information on spare parts kits, please refer to the "Spare Part Finding Tool" on the Internet:

www.endress.com/spareparts_consumables

10.2 Return

The product must be returned if repairs or a factory calibration are required, or if the wrong product was ordered or delivered. As an ISO-certified company and also due to legal regulations, Endress+Hauser is obliged to follow certain procedures when handling any returned products that have been in contact with medium.

To ensure the swift, safe and professional return of the device:

- Refer to the website www.endress.com/support/return-material for information on the procedure and conditions for returning devices.

10.3 Disposal

The device contains electronic components. and must therefore be disposed of in accordance with regulations on the disposal of electronic waste.

- Observe the local regulations.

11 Accessories

The following are the most important accessories available at the time this documentation was issued.

▶ For accessories not listed here, please contact your Service or Sales Center.

11.1 Device-specific accessories

Memosens data cable CYK10
- For digital sensors with Memosens technology
- Product Configurator on the product page: www.endress.com/cyk10

Technical Information TI00118C

Memosens data cable CYK11
- Extension cable for digital sensors with Memosens protocol
- Product Configurator on the product page: www.endress.com/cyk11

Technical Information TI00118C

Memosens laboratory cable CYK20
- For digital sensors with Memosens technology
- Product Configurator on the product page: www.endress.com/cyk20

Flowfit CCA250
- Flow assembly for chlorine and pH/ORP sensors
- Product Configurator on the product page: www.endress.com/cca250

Technical Information TI00062C

FlexdipCYA112
- Immersion assembly for water and wastewater
- Modular assembly system for sensors in open basins, channels and tanks
- Material: PVC or stainless steel
- Product Configurator on the product page: www.endress.com/cya112

Technical Information TI00432C

Photometer PF-3
- Compact hand-held photometer for determining free available chlorine
- Color-coded reagent bottles with clear dosing instructions
- Order No.: 71257946

COY8

Zero-point gel for oxygen and chlorine sensors
- Oxygen-free gel for the validation, calibration and adjustment of oxygen measuring cells
- Product Configurator on the product page: www.endress.com/coy8

Technical Information TI01244C

Service kit CCS14x
- For chlorine sensors CCS140 / CCS141 / CCS142D
- 2 replacement cartridges, electrolyte 50 ml (1.69 fl.oz), polishing sheets
- Order No. 71076921

12 Technical data

12.1 Input

12.1.1 Measured variables

Free chlorine:	hypochlorous acid (HOCl)

12.1.2 Measuring ranges

CCS142D-A	0.05 to 20 mg/l HOCl (at 20 °C (68 °F), pH 5.5)
CCS142D-G	0.01 to 5 mg/l HOCl (at 20 °C (68 °F), pH 5.5)

12.1.3 Signal current

CCS142D-A	Approx. 25 nA per mg/l HOCl (at 20 °C (68 °F), pH 5.5)
CCS142D-G	Approx. 80 nA per mg/l HOCl (at 20 °C (68 °F), pH 5.5)

12.2 Performance characteristics

12.2.1 Reference operating conditions

20 °C (68 °F)

pH 5.5

12.2.2 Response time

T_{90} < 2 min

in applications involving mainly active chlorination

12.2.3 Measured value resolution of sensor

CCS142D-A	Approx. 15 µg/l
CCS142D-G	Approx. 5 µg/l

12.2.4 Measured error [3)]

1% of reading

12.2.5 Repeatability

- Sensor: ± 1%
- Reference method: depending on version

Calibration standards do not have long-term stability.

12.2.6 Nominal slope

CCS142D-A	-25 nA per mg/l
CCS142D-G	-80 nA per mg/l

12.2.7 Long-term drift

< 1.5 % per month

12.2.8 Polarization time

	First commissioning	Recommissioning
CCS142D-A	60 min	30 min
CCS142D-G	90 min	45 min

3) Based on ISO 15839. The measured error includes all the uncertainties of the sensor and transmitter (measuring chain). It does not contain all the uncertainties caused by the reference material and adjustments that may have been performed.

12.2.9 Operating time of the electrolyte

At average medium concentrations of 1 mg/l HOCl

CCS142D-A	> 5 years
CCS142D-G	> 3 years

12.2.10 Chlorine intrinsic consumption

At average medium concentrations of 1 mg/l Cl_2 and under reference operating conditions

CCS142D-A	25 ng HOCl per hour
CCS142D-G	100 ng HOCl per hour

12.3 Environment

12.3.1 Ambient temperature

−5 to 55 °C (20 to 130 °F)

12.3.2 Storage temperature

With electrolyte:	5 to 50 °C (40 to 120 °F)
Without electrolyte:	−20 to 60 °C (−4 to 140 °F)

12.3.3 Degree of protection

IP 68 (up to mounting collar Ø 36 mm (1.42"))

12.4 Process

12.4.1 Process temperature

0 to 45 °C (32 to 110 °F), non-freezing

12.4.2 Process pressure

Max. 2 bar (29 psi) absolute, if installed in assembly CCA250

12.4.3 pH range

At average medium concentrations of 1 mg/l Cl_2 and under reference operating conditions

Calibration	
CCS142D-A	pH 4 to 8
CCS142D-G	pH 4 to 8.2
Measurement	pH 4 to 9

Chlorine measurement possible up to pH 9 with limited accuracy

12.4.4 Flow

min. 30 l/h (8 gal/h), in assembly CCA250

12.4.5 Minimum flow

min. 15 cm/s (0.5 ft/s)

12.5 Mechanical construction

12.5.1 Dimensions

→ 15

12.5.2 Weight

0.1 kg (0.2 lbs)

12.5.3 Materials

Sensor shaft:	PVC
Membrane:	PTFE
Membrane cap:	PBT (GF 30), PVDF
Cathode:	Gold
Anode:	Silver/silver chloride

12.5.4 Cable specification

max. 100 m (330 ft), incl. Cable extension

13 Installation and operation in hazardous environment Class I Div. 2

Non-sparking device for use in specified hazardous environment in accordance with:
- cCSAus Class I Div. 2
- Gas group A, B, C, D
- Temperature class T6, -5 °C (23 °F) < Ta < 55 °C (131 °F)
- Control drawing: 401204

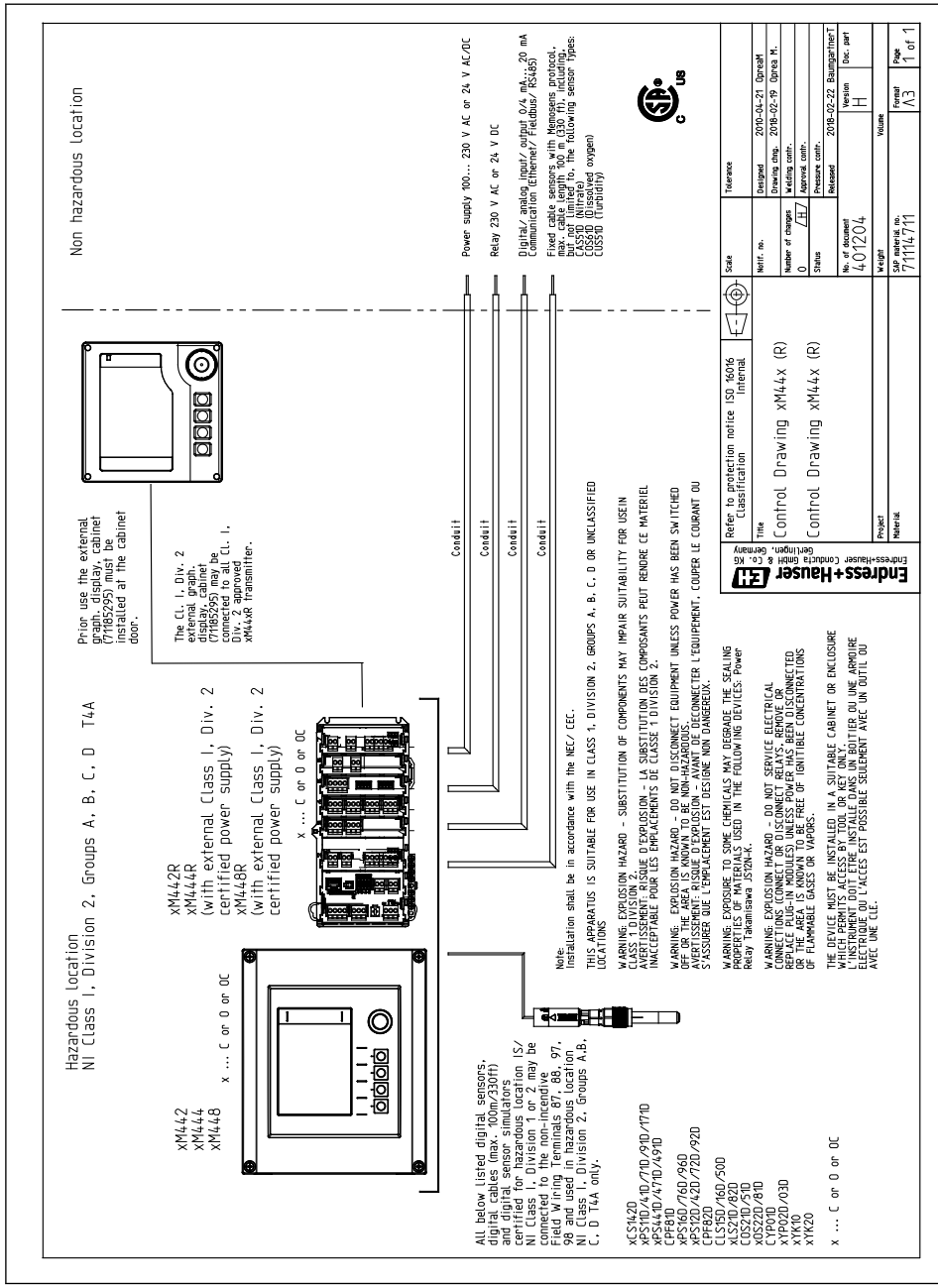
Hazardous location
NI Class I, Division 2, Groups A, B, C, D T4A
Non hazardous location
xM442
xM444
xM448
x ... C or O or OC
xM442R
xM444R
(with external Class I, Div. 2
certified power supply)
xM448R
(with external Class I, Div. 2
certified power supply)
x ... C or O or OC
Prior use the external graph. display, cabinet (71185295) must be installed at the cabinet door.
The Cl. I, Div. 2 external graph. display, cabinet (71185295) may be connected to all Cl. I, Div. 2 approved xM44xR transmitter.
Conduit
Conduit
Conduit
Conduit
Power supply 100... 230 V AC or 24 V AC/DC
Relay 230 V AC or 24 V DC
Digital/ analog input/ output 0/4 mA... 20 mA
Communication (Ethernet/ Fieldbus/ RS485)
Fixed cable sensors with Memosens protocol, max. cable length 100 m (330 ft), including, but not limited to, the following sensor types:
CAS51D (Nitrate)
COS61D (Dissolved oxygen)
CUS51D (Turbidity)
All below listed digital sensors, digital cables (max. 100m/330ft) and digital sensor simulators certified for hazardous location IS/ NI Class I, Division 1 or 2 may be connected to the non-incendive Field Wiring Terminals 87, 88, 97, 98 and used in hazardous location NI Class I, Division 2, Groups A,B, C, D T4A only.
xCS142D
xPS11D/41D/71D/91D/171D
xPS441D/471D/491D
CPF81D
xPS160/760/960
xPS12D/42D/72D/92D
CPF82D
CLS15D/16D/50D
xLS21D/82D
COS21D/51D
xOS22D/81D
CYP01D
xYP02D/03D
xYK10
xYK20
x ... C or O or OC
Note:
Installation shall be in accordance with the NEC/ CEC.
THIS APPARATUS IS SUITABLE FOR USE IN CLASS 1, DIVISION 2, GROUPS A, B, C, D OR UNCLASSIFIED LOCATIONS
WARNING: EXPLOSION HAZARD - SUBSTITUTION OF COMPONENTS MAY IMPAIR SUITABILITY FOR USEIN CLASS 1 DIVISION 2.
AVERTISSEMENT: RISQUE D'EXPLOSION - LA SUBSTITUTION DES COMPOSANTS PEUT RENDRE CE MATERIEL INACCEPTABLE POUR LES EMPLACEMENTS DE CLASSE 1 DIVISION 2.
WARNING: EXPLOSION HAZARD - DO NOT DISCONNECT EQUIPMENT UNLESS POWER HAS BEEN SWITCHED OFF OR THE AREA IS KNOWN TO BE NON-HAZARDOUS.
AVERTISSEMENT: RISQUE D'EXPLOSION - AVANT DE DECONNECTER L'EQUIPEMENT, COUPER LE COURANT OU S'ASSURER QUE L'EMPLACEMENT EST DESIGNE NON DANGEREUX.
WARNING: EXPOSURE TO SOME CHEMICALS MAY DEGRADE THE SEALING PROPERTIES OF MATERIALS USED IN THE FOLLOWING DEVICES: Power Relay Takamisawa JS12N-K.
WARNING: EXPLOSION HAZARD - DO NOT SERVICE ELECTRICAL CONNECTIONS (CONNECT OR DISCONNECT RELAYS, REMOVE OR REPLACE PLUG-IN MODULES) UNLESS POWER HAS BEEN DISCONNECTED OR THE AREA IS KNOWN TO BE FREE OF IGNITIBLE CONCENTRATIONS OF FLAMMABLE GASES OR VAPORS.
THE DEVICE MUST BE INSTALLED IN A SUITABLE CABINET OR ENCLOSURE WHICH PERMITS ACCESS BY TOOL OR KEY ONLY.
L'INSTRUMENT DOIT ETRE INSTALLE DANS UN BOITIER OU UNE ARMOIRE ELECTRIQUE OU L'ACCES EST POSSIBLE SEULEMENT AVEC UN OUTIL OU AVEC UNE CLE.
Refer to protection notice ISO 16016
Classification Internal
Title
Control Drawing xM44x (R)
Control Drawing xM44x (R)
Endress+Hauser
Endress+Hauser Conducta GmbH & Co. KG
Gerlingen, Germany
Scale
Tolerance
Notif. no.
Designed 2010-04-21 OpreaM
Drawing chng. 2018-02-19 Oprea M.
Number of changes 0
Welding contr.
Approval contr.
Status
Pressure contr.
Released 2018-02-22 BaumgartnerT
No. of document 401204
Version H
Doc. part
Project
Weight
Volume
Material
SAP material no. 71114711
Format A3
Page 1 of 1

Index

A
Accessories 32
Ambient temperature 35

C
Cable specification 36
Check
  Connection 19
  Function 21
  Installation 18
Chlorine intrinsic consumption 35
Cleaning 25
Connection
  Check 19
  Ensuring the degree of protection 19

D
Declaration of Conformity 13
Degree of protection
  Ensuring 19
  Technical data 35
Designated use 6
Device description 8
Diagnostics 23
Disposal 31

E
Effect on the measuring signal
  Flow 11
  pH value 9
  Temperature 11
Electrical connection 19
Electrolyte 26
Environment 35
Ex approvals 13

F
Flow 11, 36
Flow assembly 17, 18
Function 8
Function check 21

I
Immersion assembly 18
Incoming acceptance 12
Installation
  Check 18
  Flow assembly 17
  Immersion assembly 18
  Orientation 14
  Sensor 16

L
Long-term drift 34

M
Maintenance schedule 25
Maintenance tasks 25
Materials 36
Maximum measured error 34
Measured value resolution 34
Measured variables 33
Measuring principle 8
Measuring ranges 33
Measuring signal 9
Measuring system 16
Minimum flow 36
Mounting instructions 14

N
Nameplate 12
Nominal slope 34

O
Operating time of the electrolyte 35
Orientation 14

P
Performance characteristics 34
pH range 35
pH value 9
Polarization time 34
Post-installation check 21
Process 35
Process pressure 35
Process temperature 35

R
Reconditioning 28
Reference operating conditions 34
Regeneration 28

Repair 31
Repeatability 34
Replacing the membrane 26
Response time 34
Return 31

S

Safety instructions 6
Scope of delivery 13
Sensor
- Calibration 21
- Cleaning 25
- Connecting 19
- Mounting 16
- Polarization 21
- Reconditioning 28
- Refilling the electrolyte 26
- Regenerating 28
- Replacing the membrane 26
- storage 27

Spare parts 31
Storage 27
Storage temperature 35
Symbols 4

T

Technical data
- Environment 35
- Input 33
- Mechanical construction 36
- Performance characteristics 34
- Process 35

Temperature 11
Troubleshooting 23

U

Use 6

W

Warnings 4
Weight 36



www.addresses.endress.com

Endress+Hauser

People for Process Automation