Burckhardt Compression

Capital parts

Highest quality for lowest lifecycle costs



Engineering excellence

Compressors for a Lifetime

The expert solution for any compressor brand

Capital parts from a leading OEM

Your advantages
As the only compressor manufacturer mastering in all reciprocating compressor technologies, we embed our unmatched expertise into every capital part we produce or repair. The result is field-proven reliability and trouble-free operations.

Your partner for any compressor
Our true advantage lies in solving your toughest compressor challenges. Whether you are aiming to boost performance or need a part for a legacy machine, we specialize in upgrading component designs and we reverse engineer parts to ensure optimal compressor performance.

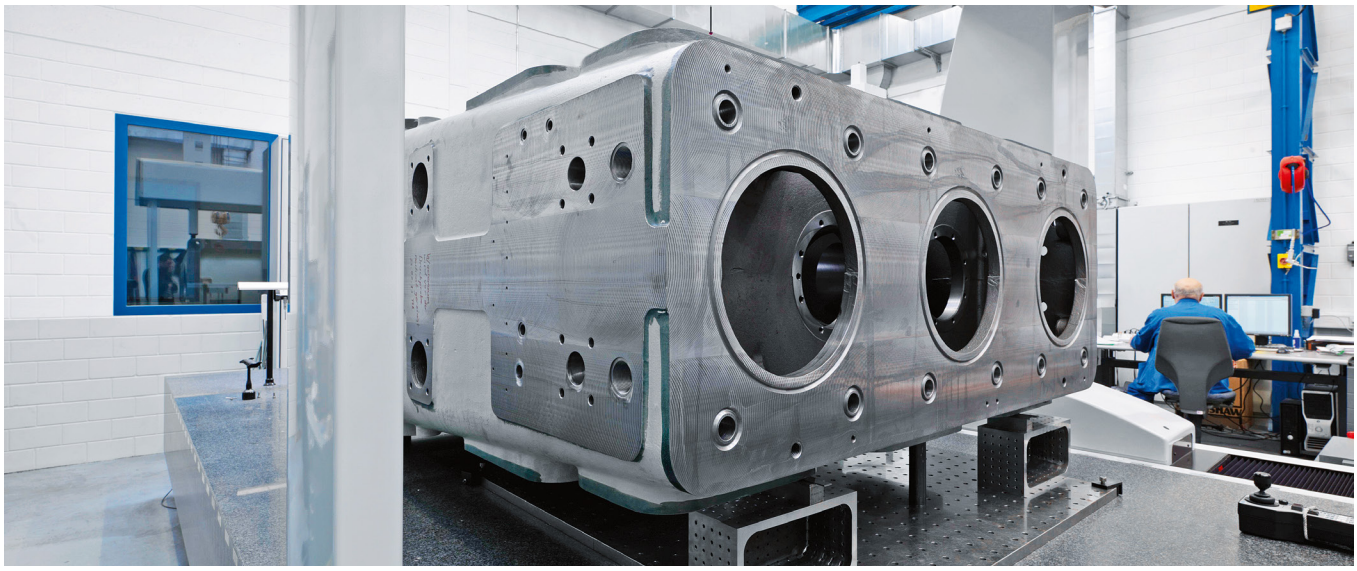

OEM expertise for every compressor brand

Your path to unmatched reliability

Uncovering the root cause: Our in-depth analyses identify the true source of failure, ensuring we solve the right problem from the start.

Engineering a better solution: We use advanced design and reverse engineering to create capital parts that are state-of-the-art and adhere to any industrial standards or environmental regulations.

Manufacturing with precision: Your custom components are produced to the highest standard for a trouble-free compressor operation.

Delivering certified results: From professional installation to final certification, we guarantee performance and your peace of mind.

Reliable solutions for highest availability

Engineered to the highest quality for every application

A compressor is an integrated system where every part interacts. That is why effective solutions require more than just a replacement part — they demand deep expertise. Our engineers look beyond the individual component, analyzing your entire operational environment to deliver an integrated solution, maximizing your equipment's reliability and uptime – for any model or brand.

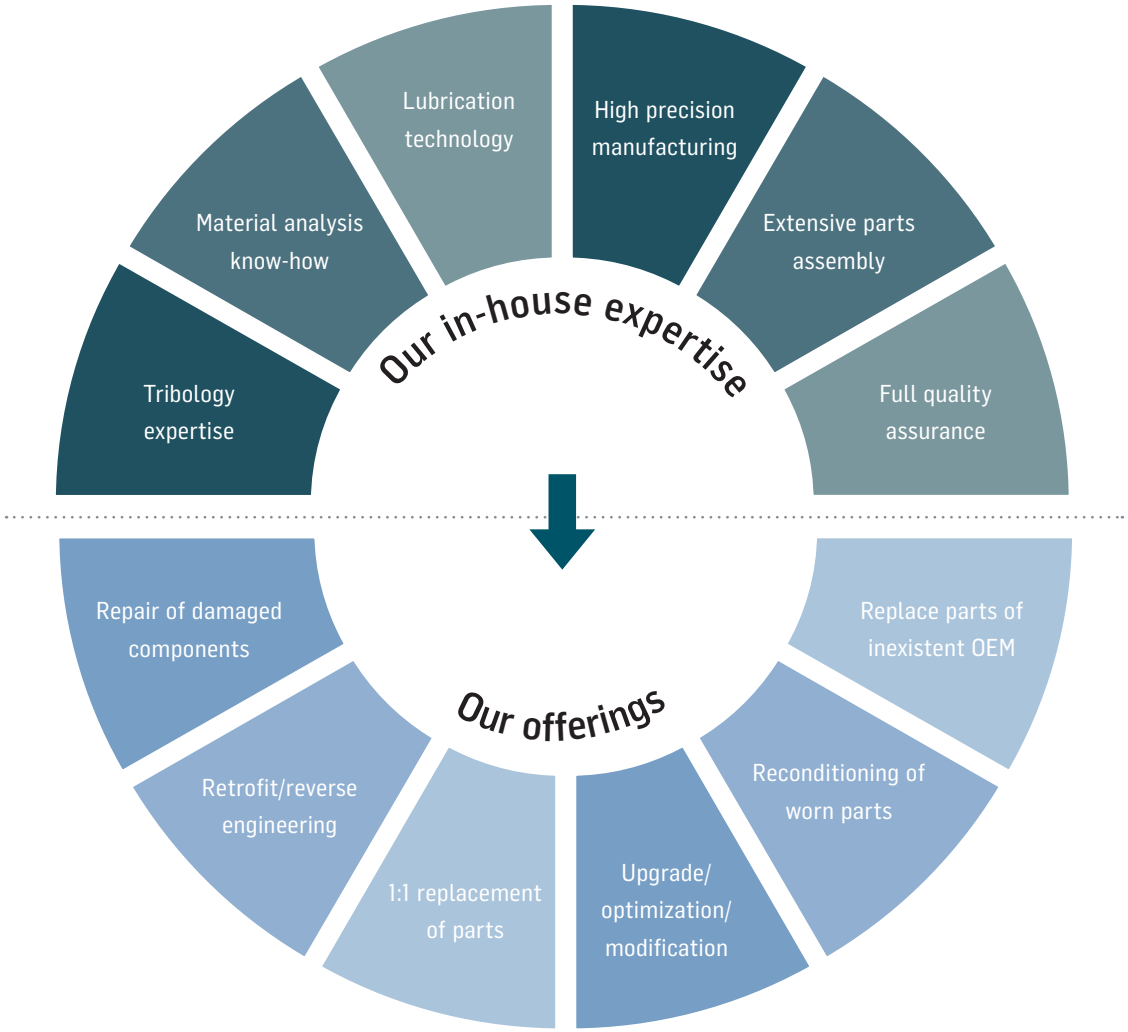

Capital parts overview

Profound technological know-how and experience

Process gas compressors API 618

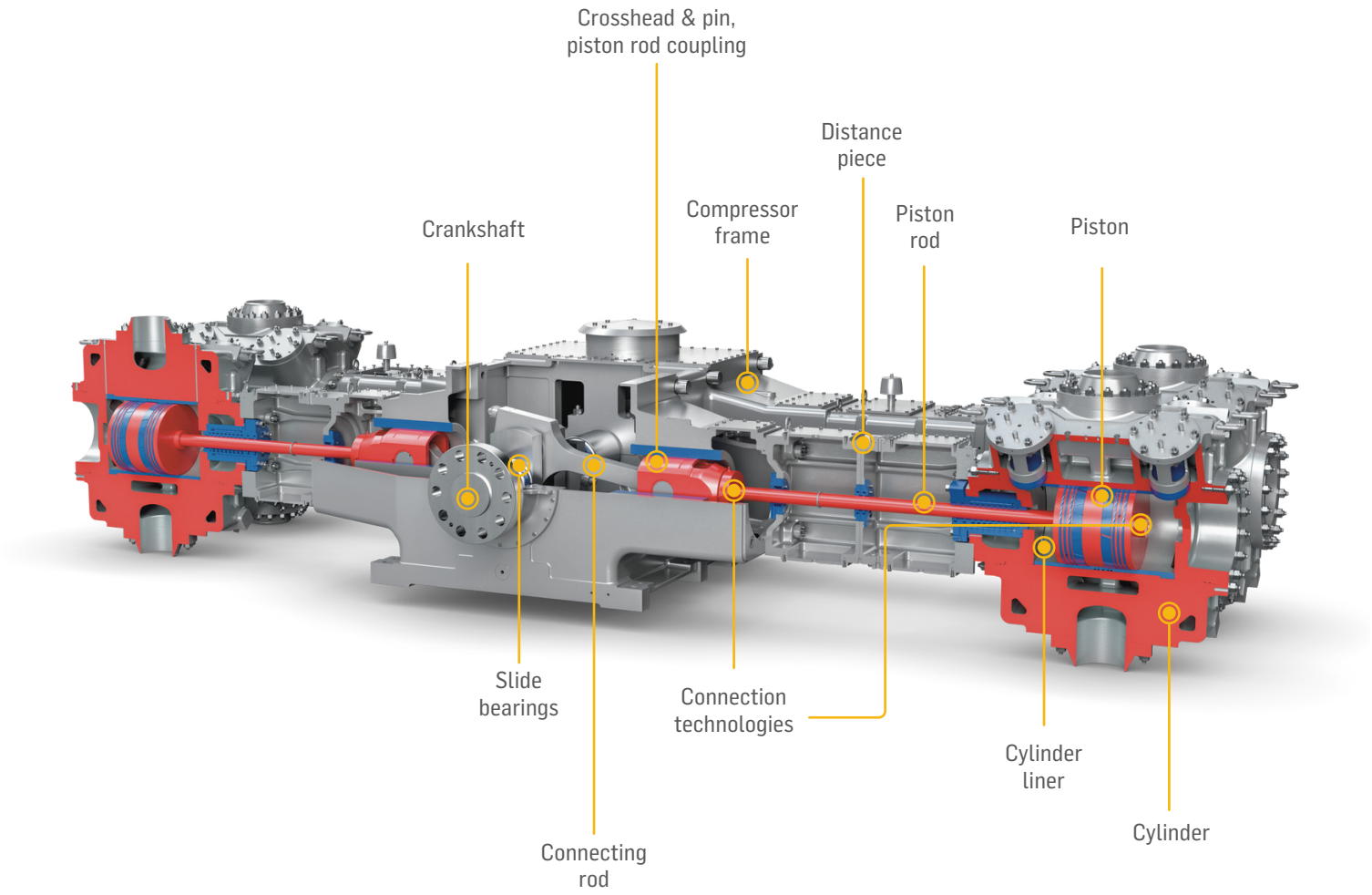

Profound technological know-how and experience

Labyrinth piston compressors

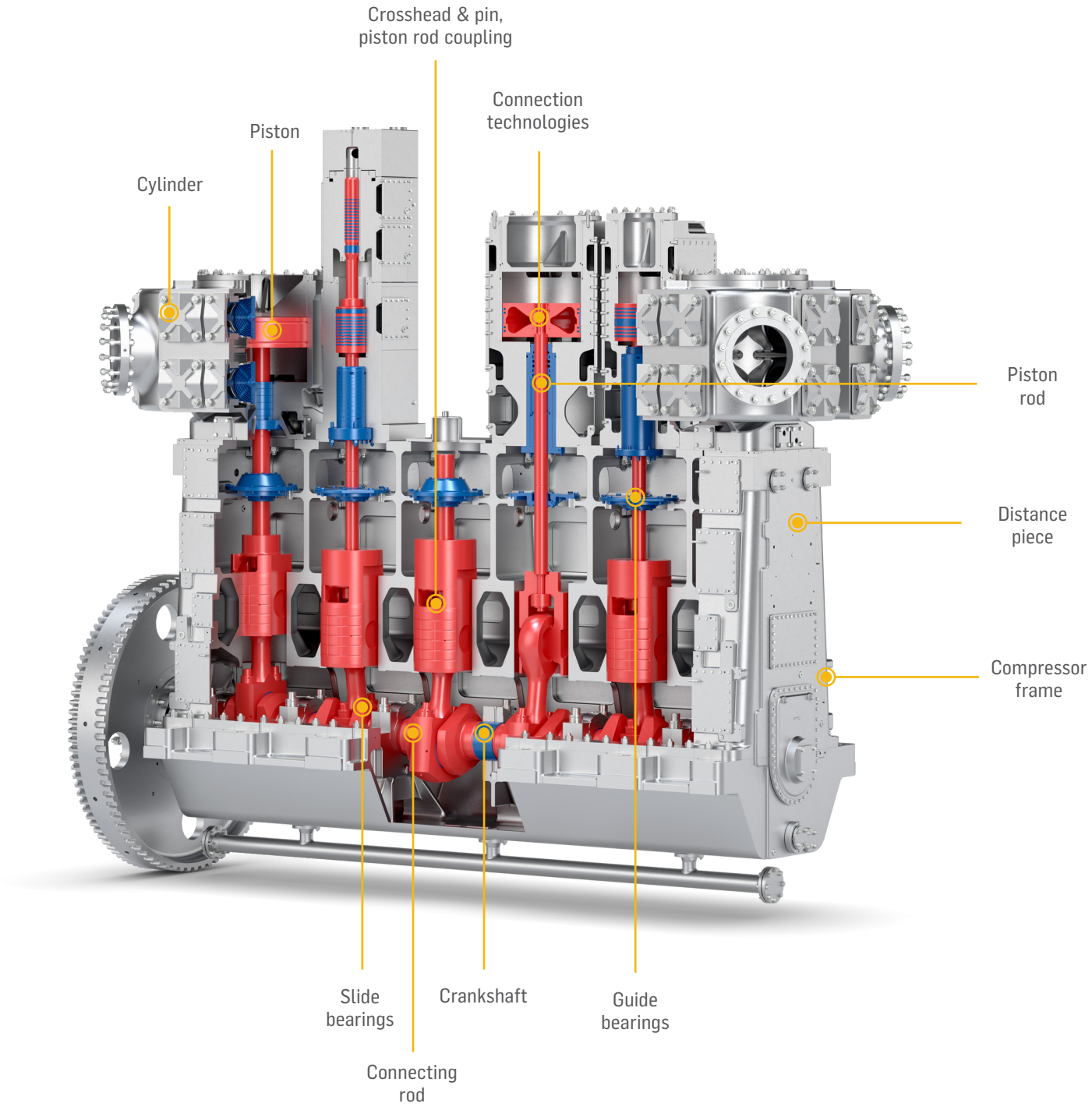

Burckhardt Compression

Burckhardt Compression AG
24/7 Emergency Hotline: +41 52 261 53 53
aftersales@burckhardtcompression.com
www.burckhardtcompression.com