Technical Information
Unifit CPA442

Process assembly
For safe installation of 12 mm sensors (Pg 13.5) in the food, beverage, pharmaceutical and chemical industry



Simple - Safe - Hygienic - Reliable

Application

- Process assembly for 12 mm sensors like pH glass sensors, pH ISFET sensors, oxygen sensors etc.
- Permanent installation in tanks and pipework
- Food
- Pharmaceuticals
- Chemicals
- Water treatment

Your benefits

- Robust assembly
- Complies with 3A standard 74-05
- Complies with the basic criteria of the European Hygienic Equipment Design Group (EHEDG):
  - In-place cleanability
  - In-line steam sterilizability
- Flush mounted, leak-tight electrode seal (molded seal)
- Electropolished surface R_a=0.38 µm or 0.76 µm (stainless steel 1.4435 (AISI 316 L) and Alloy C22)
- Hygienic process connections, flanges and further established process connections
- Protection cover for KCl and gel sensors

Endress+Hauser
People for Process Automation

Function and system design

Functionality

The process assembly CPA442 is used to install 12 mm sensors. You can install the assembly vertically or angularly in pipes or reactors.
The assembly seals the sensor against the process. It is suitable for:

- CIP (cleaning in place)
- SIP (sterilization in place)

The stainless steel version and the Alloy C22 version are autoclavable.

Measuring system

A complete measuring system comprises:
- Unifit CPA442 assembly
- 12 mm sensor, e.g. Orbisint CPS11D or Oxymax COS22D
- Transmitter, e.g. Liquiline CM44x
- Measuring cable

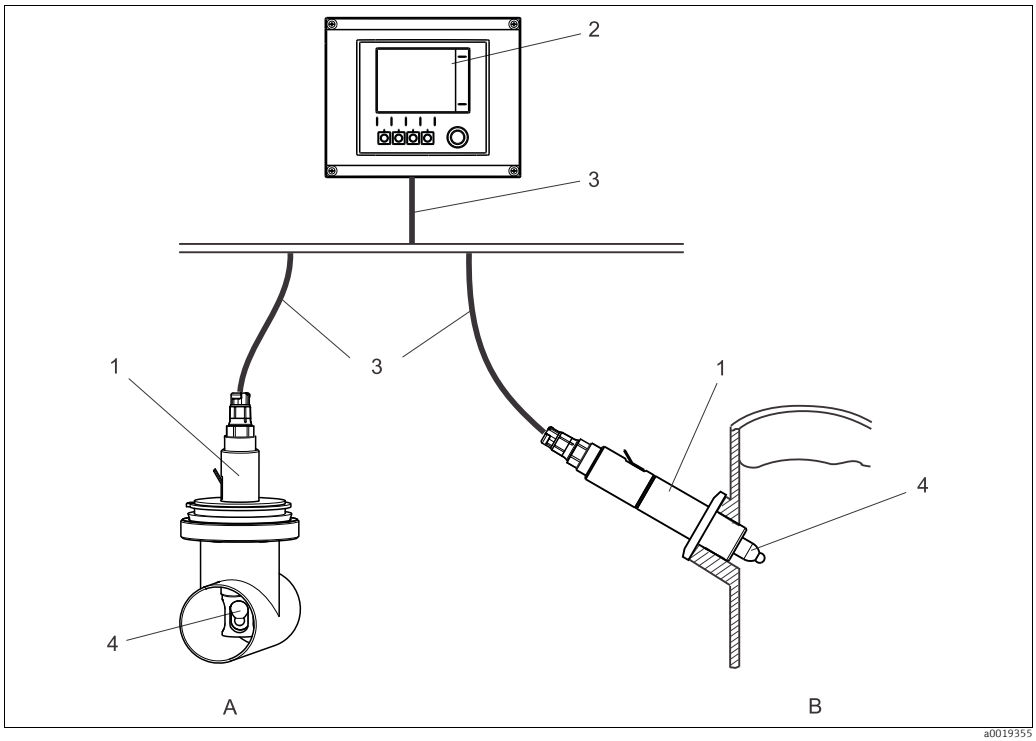

Example of a measuring system

1 Unifit CPA442
2 Liquiline CM44x
3 Measuring cable
4 Orbisint CPS11D
A Installation in pipe
B Installation in reactor

Reliability

- The asssemblies are manufactured according to the certified quality criteria of Endress+Hauser.
- The assemblies are made of high-quality materials like stainless steel 1.4435 (AISI 316 L), Alloy C22 or highly resistant plastics like PVDF or PEEK. Only these materials and the respective sealings are in contact with medium. The assemblies are manufactured from solid material (except the 15° versions S and T).
- The assemblies are inline cleanable and inline sterilizable according to the EHEDG criteria.
- Certified versions and certificates are available.

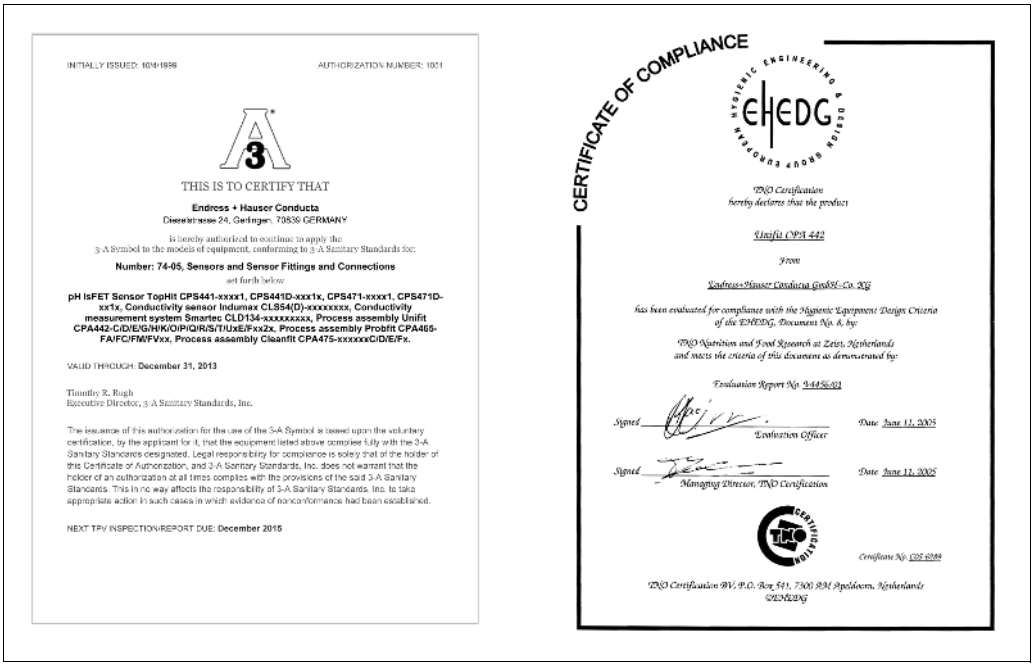

INITIALLY ISSUED: 10/4/1996 AUTHORIZATION NUMBER: 1001

THIS IS TO CERTIFY THAT

Endress + Hauser Conducta
Dieselstrasse 24, Gerlingen, 70839 GERMANY

is hereby authorized to continue to apply the 3-A Symbol to the models of equipment, conforming to 3-A Sanitary Standards for:

Number: 74-05, Sensors and Sensor Fittings and Connections

set forth below

pH IsFET Sensor TopHit CPS441-xxxx1, CPS441D-xxx1x, CPS471-xxxx1, CPS471D-xx1x, Conductivity sensor Indumax CLS54(D)-xxxxxxxx, Conductivity measurement system Smartec CLD134-xxxxxxxxx, Process assembly Unifit CPA442-C/D/E/G/H/K/O/P/Q/R/S/T/UxE/Fxx2x, Process assembly Probfit CPA465-FA/FC/FM/FVxx, Process assembly Cleanfit CPA475-xxxxxxC/D/E/Fx.

VALID THROUGH: **December 31, 2013**

Timothy R. Rugh
Executive Director, 3-A Sanitary Standards, Inc.

The issuance of this authorization for the use of the 3-A Symbol is based upon the voluntary certification, by the applicant for it, that the equipment listed above complies fully with the 3-A Sanitary Standards designated. Legal responsibility for compliance is solely that of the holder of this Certificate of Authorization, and 3-A Sanitary Standards, Inc. does not warrant that the holder of an authorization at all times complies with the provisions of the said 3-A Sanitary Standards. This in no way affects the responsibility of 3-A Sanitary Standards, Inc. to take appropriate action in such cases in which evidence of nonconformance had been established.

NEXT TPV INSPECTION/REPORT DUE: **December 2015**

CERTIFICATE OF COMPLIANCE

EHEDG

TNO Certification
hereby declares that the product

Unifit CPA 442

From

Endress+Hauser Conducta GmbH+Co. KG

has been evaluated for compliance with the Hygienic Equipment Design Criteria of the EHEDG, Document No. 8, by:

TNO Nutrition and Food Research at Zeist, Netherlands
and meets the criteria of this document as demonstrated by:

Evaluation Report No. 94456/01

Signed _____ Date June 12, 2005
Evaluation Officer

Signed _____ Date June 12, 2005
Managing Director, TNO Certification

Certificate No. CZE 6289

TNO Certification BV, P.O. Box 541, 7300 AM Apeldoorn, Netherlands
©EHEDG

a0019557

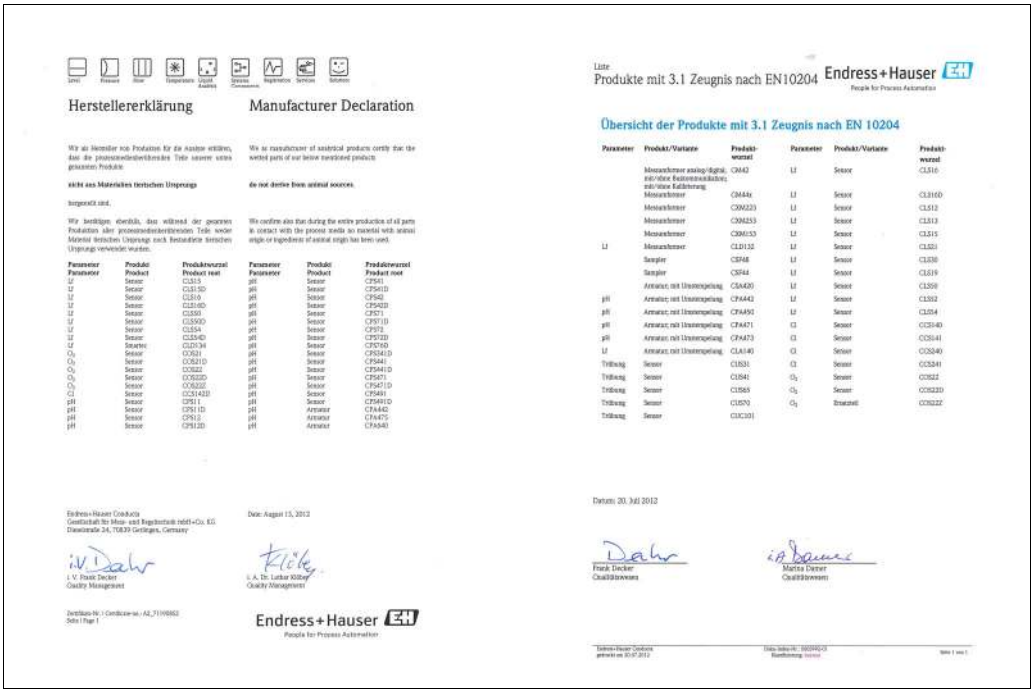

Herstellererklärung

Manufacturer Declaration

Endress+Hauser Conducta
Gesellschaft für Mess- und Regeltechnik mbH+Co. KG
Dieselstraße 24, 70839 Gerlingen, Germany

Date: August 15, 2012

i.V. Frank Decker
Quality Management

i. A. Dr. Lothar Kölbey
Quality Management

Endress+Hauser
People for Process Automation

Liste
Produkte mit 3.1 Zeugnis nach EN10204

Endress+Hauser
People for Process Automation

Übersicht der Produkte mit 3.1 Zeugnis nach EN 10204

Parameter	Produkt/Variante	Produktwurzel	Parameter	Produkt/Variante	Produktwurzel
	Messumformer analog/digital, mit/ohne Basisentwicklung, mit/ohne Kalibrierung	CM42	LI	Sensor	CLS16
	Messumformer	CM44x	LI	Sensor	CLS16D
	Messumformer	CXM223	LI	Sensor	CLS12
	Messumformer	CXM253	LI	Sensor	CLS13
	Messumformer	CXM153	LI	Sensor	CLS15
LI	Messumformer	CLD132	LI	Sensor	CLS21
	Sampler	CSF48	LI	Sensor	CLS30
	Sampler	CSF44	LI	Sensor	CLS19
	Armatur, mit Umstempelung	CLA420	LI	Sensor	CLS50
pH	Armatur, mit Umstempelung	CPA442	LI	Sensor	CLS52
pH	Armatur, mit Umstempelung	CPA450	LI	Sensor	CLS54
pH	Armatur, mit Umstempelung	CPA471	Cl	Sensor	CCS140
pH	Armatur, mit Umstempelung	CPA473	Cl	Sensor	CCS141
LI	Armatur, mit Umstempelung	CLA140	Cl	Sensor	CCS240
Trübung	Sensor	CLS31	Cl	Sensor	CCS241
Trübung	Sensor	CLS41	O_2	Sensor	CCS22
Trübung	Sensor	CLS65	O_2	Sensor	CCS22D
Trübung	Sensor	CLS70	O_2	Smartsel	CCS222
Trübung	Sensor	CLC101			

Datum: 20. Juli 2012

Frank Decker
Qualitätswesen

Martina Dürner
Qualitätswesen

a0019558

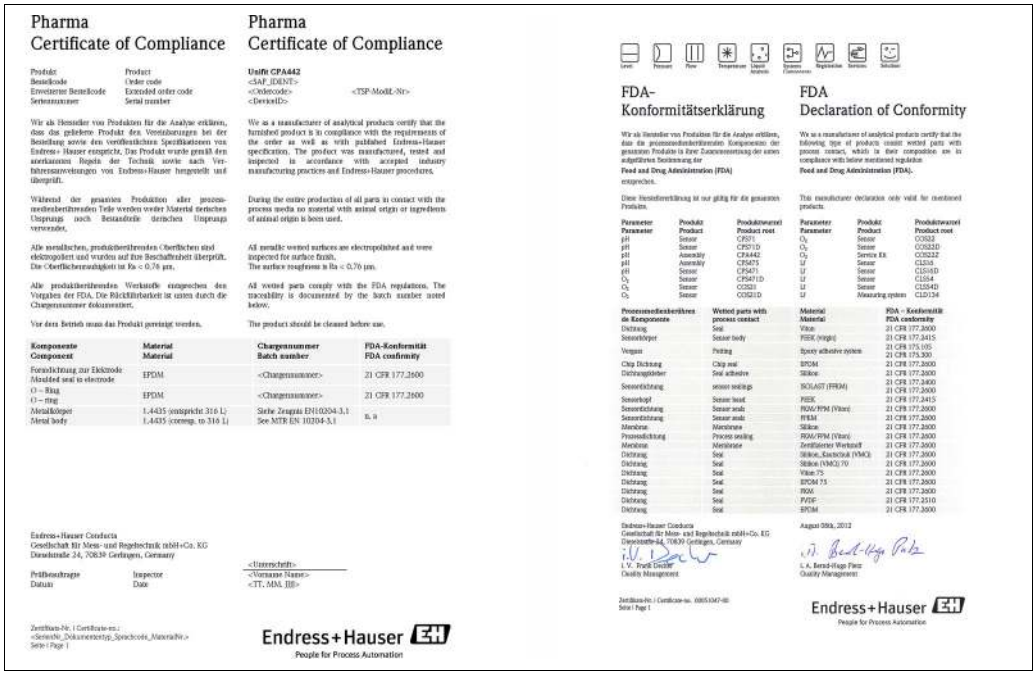

Pharma
Certificate of Compliance

Produkt / Product
Bestellcode / Order code
Erweiterter Bestellcode / Extended order code
Seriennummer / Serial number

Wir als Hersteller von Produkten für die Analyse erklären, dass das gelieferte Produkt den Vereinbarungen bei der Bestellung sowie den veröffentlichten Spezifikationen von Endress+Hauser entspricht. Das Produkt wurde gemäß den anerkannten Regeln der Technik sowie nach Verfahrensanweisungen von Endress+Hauser hergestellt und überprüft.

Während der gesamten Produktion aller prozessmedienberührenden Teile werden weder Material tierischen Ursprungs noch Bestandteile tierischen Ursprungs verwendet.

Alle metallischen, produktberührenden Oberflächen sind elektropoliert und wurden auf ihre Beschaffenheit überprüft. Die Oberflächenrauhigkeit ist Ra < 0,76 µm.

Alle produktberührenden Werkstoffe entsprechen den Vorgaben der FDA. Die Rückführbarkeit ist unten durch die Chargennummer dokumentiert.

Vor dem Betrieb muss das Produkt gereinigt werden.

Komponente / Component	Material / Material	Chargennummer / Batch number	FDA-Konformität / FDA confirmity
Formdichtung zur Elektrode / Moulded seal to electrode	EPDM	<Chargennummer>	21 CFR 177.2600
O – Ring / O – ring	EPDM	<Chargennummer>	21 CFR 177.2600
Metallkörper / Metal body	1.4435 (entspricht 316 L) / 1.4435 (corresp. to 316 L)	Siehe Zeugnis EN10204-3.1 / See MTR EN 10204-3.1	[illegible]

Endress+Hauser Conducta
Gesellschaft für Mess- und Regeltechnik mbH+Co. KG
Dieselstraße 24, 70839 Gerlingen, Germany

Prüfbescheinigung / Inspector
Datum / Date

<Unterschrift>
<Vorname Name>
<TT. MM. JJJJ>

Zertifikats-Nr. / Certificate-no.:
<SeriesNr_Dokumententyp_Sprachcode_MaterialNr.>
Seite / Page 1

Endress+Hauser
People for Process Automation

Pharma
Certificate of Compliance

Unifit CPA442
<SAP_IDENT>
<Ordercode> <TSP-ModIL/Nr>
<DeviceID>

We as a manufacturer of analytical products certify that the furnished product is in compliance with the requirements of the order as well as with published Endress+Hauser specification. The product was manufactured, tested and inspected in accordance with accepted industry manufacturing practices and Endress+Hauser procedures.

During the entire production of all parts in contact with the process media no material with animal origin or ingredients of animal origin is been used.

All metallic wetted surfaces are electropolished and were inspected for surface finish.
The surface roughness is Ra < 0,76 µm.

All wetted parts comply with the FDA regulations. The traceability is documented by the batch number noted below.

The product should be cleaned before use.

FDA-
Konformitätserklärung

Wir als Hersteller von Produkten für die Analyse erklären, dass die prozessmedienberührenden Komponenten der genannten Produkte in ihrer Zusammensetzung der unten aufgeführten Bestimmung der **Food and Drug Administration (FDA)** entsprechen.

Diese Herstellererklärung ist nur gültig für die genannten Produkte.

Parameter / Parameter	Produkt / Product	Produktwurzel / Product root
pH	Sensor	CPS71
pH	Sensor	CPS71D
pH	Assembly	CPA442
pH	Assembly	CPS471
pH	Sensor	CPS471
O_2	Sensor	CPS471D
O_2	Sensor	COS21
O_2	Sensor	COS21D

Parameter / Parameter	Produkt / Product	Produktwurzel / Product root
O_2	Sensor	COS22
O_2	Sensor	COS22D
O_2	Service Kit	COS22Z
LF	Sensor	CLS16
LF	Sensor	CLS16D
LF	Sensor	CLS54
LF	Sensor	CLS54D
LF	Measuring system	CLD134

Prozessmedienberührtes de Komponente / Wetted parts with process contact	Material / Material	FDA – Konformität / FDA conformity
Dichtung / Seal	Viton	21 CFR 177.2600
Sensorkörper / Sensor body	PEEK (virgin)	21 CFR 177.2415
		21 CFR 175.105
Verguss / Potting	Epoxy adhesive system	21 CFR 175.300
Chip Dichtung / Chip seal	EPDM	21 CFR 177.2600
Dichtungskleber / Seal adhesive	Silikon	21 CFR 177.2600
Sensorabdichtung / sensor sealings	SCALAST (FFKM)	21 CFR 177.2600
		21 CFR 177.2600
Sensorkopf / Sensor head	PEEK	21 CFR 177.2415
Sensorabdichtung / Sensor seals	FKM/FPM (Viton)	21 CFR 177.2600
Sensorabdichtung / Sensor seals	FFKM	21 CFR 177.2600
Membran / Membrane	Silikon	21 CFR 177.2600
Prozessabdichtung / Process sealing	FKM/FPM (Viton)	21 CFR 177.2600
Membran / Membrane	Zertifizierter Werkstoff	21 CFR 177.2600
Dichtung / Seal	Silikon_Elastichalt (VMQ)	21 CFR 177.2600
Dichtung / Seal	Silikon (VMQ) 70	21 CFR 177.2600
Dichtung / Seal	Viton 75	21 CFR 177.2600
Dichtung / Seal	EPDM 75	21 CFR 177.2600
Dichtung / Seal	FKM	21 CFR 177.2600
Dichtung / Seal	FVMF	21 CFR 177.2510
Dichtung / Seal	EPDM	21 CFR 177.2600

Endress+Hauser Conducta
Gesellschaft für Mess- und Regeltechnik mbH+Co. KG
Dieselstraße 24, 70839 Gerlingen, Germany

i. V. Frank Deuble
Quality Management

August 09th, 2012

i. A. Bernd-Hugo Patz
Quality Management

Zertifikats-Nr. / Certificate-no. 00053047-00
Seite / Page 1

Endress+Hauser
People for Process Automation

a0019559

The certificates are subjects to changes. The shown examples might not be the latest versions.

Installation

Installation angle

A	Glass sensor:	Installation angle of at least 15° from the horizontal
B	ISFET pH sensor:	No restrictions, recommended 0 ... 180°
C	Oxygen sensor:	Installation angle of at least 10° from the horizontal

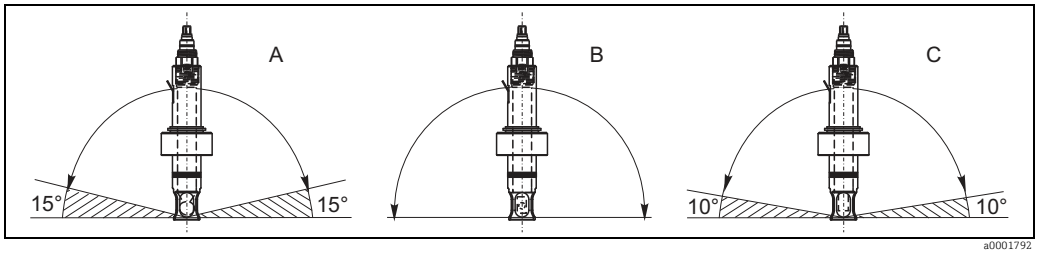

Fig. 1: Permitted installation angles depending on the sensor

Environment

Ambient temperature

-15 to 80 °C (+5 to 176 °F)

Storage temperature

-15 to 60 °C (+5 to 140 °F)

Process

Process temperature range

Stainless steel and Alloy C22	−15 to 140 °C (+5 to 284 °F)
PEEK	−10 to 140 °C (+14 to 284 °F)
PVDF	−10 to 120 °C (+14 to 248 °F)

Process pressure

Stainless steel and Alloy C22	12 bar (174 psi) up to 90 °C (194 °F) 6 bar (87 psi) up to 140 °C (284 °F) 5 bar (72.5 psi) at 150 °C (302 °F) max. 60 minutes
PEEK	10 bar (145 psi) up to 60 °C (140 °F) 2 bar (29 psi) up to 140 °C (284 °F)
PVDF	10 bar (145 psi) up to 40 °C (104 °F) 2 bar (29 psi) up to 120 °C (248 °F)

Pressure / temperature diagram

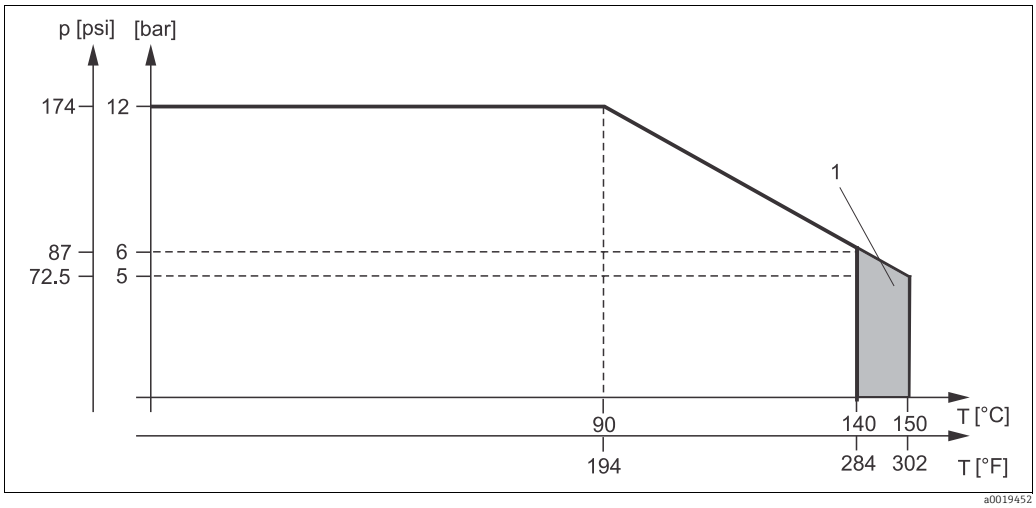

Pressure temperature diagram for stainless steel 1.4435 (AISI 316 L) and Alloy C22

1 Short term for sterilization (max. 60 minutes)

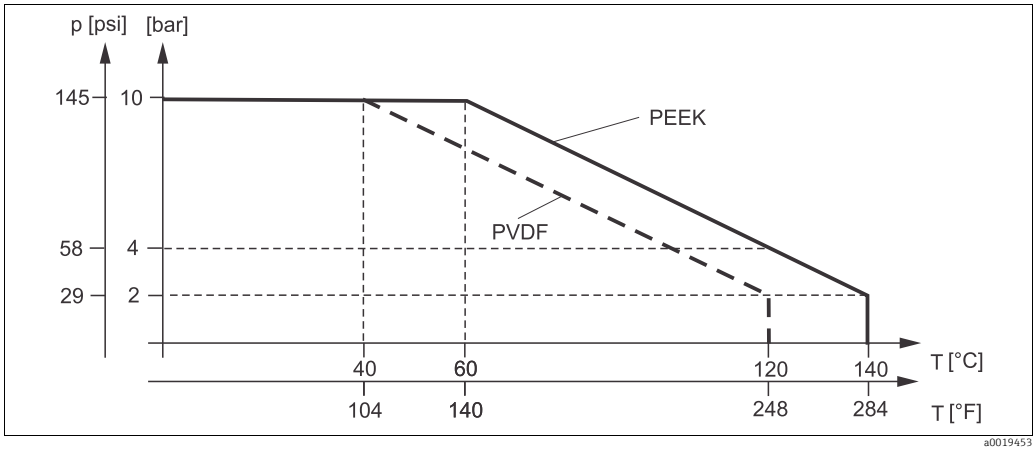

Pressure temperature diagram for PEEK and PVDF

Mechanical construction

Design

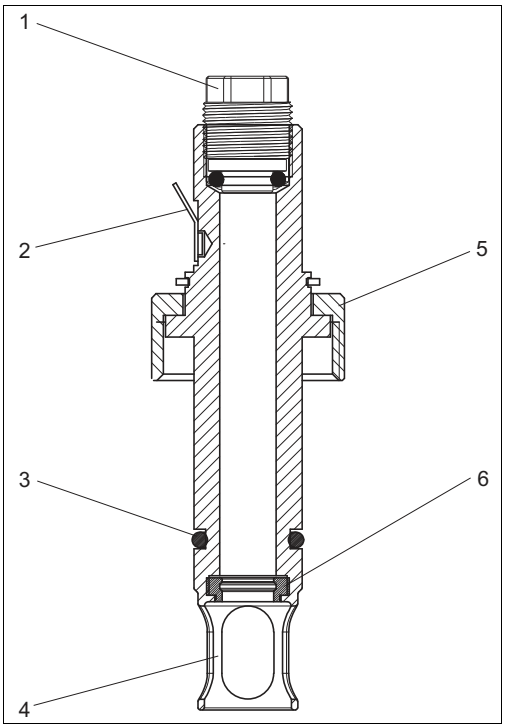

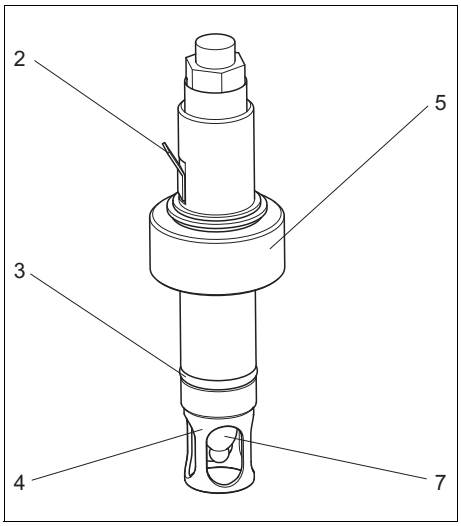

1 Dummy plug
2 PM pin (optional)
3 O-ring (versions A, B, M and N only)
4 Sensor protection guard (optional)
5 Process connection (here DN25 standard / 1.6")
6 Molded seal
7 Sensor (here glass sensor)

Dimensions

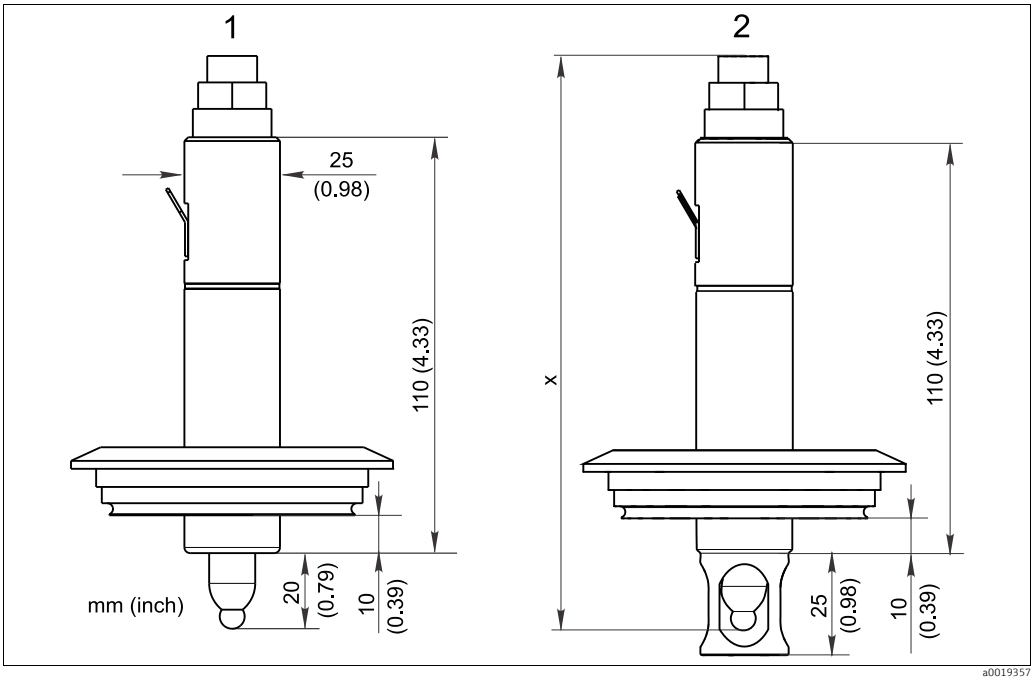

Dimensions (version G, Varivent)

1 Without sensor protection guard
2 With sensor protection guard
x Sensor length without cable

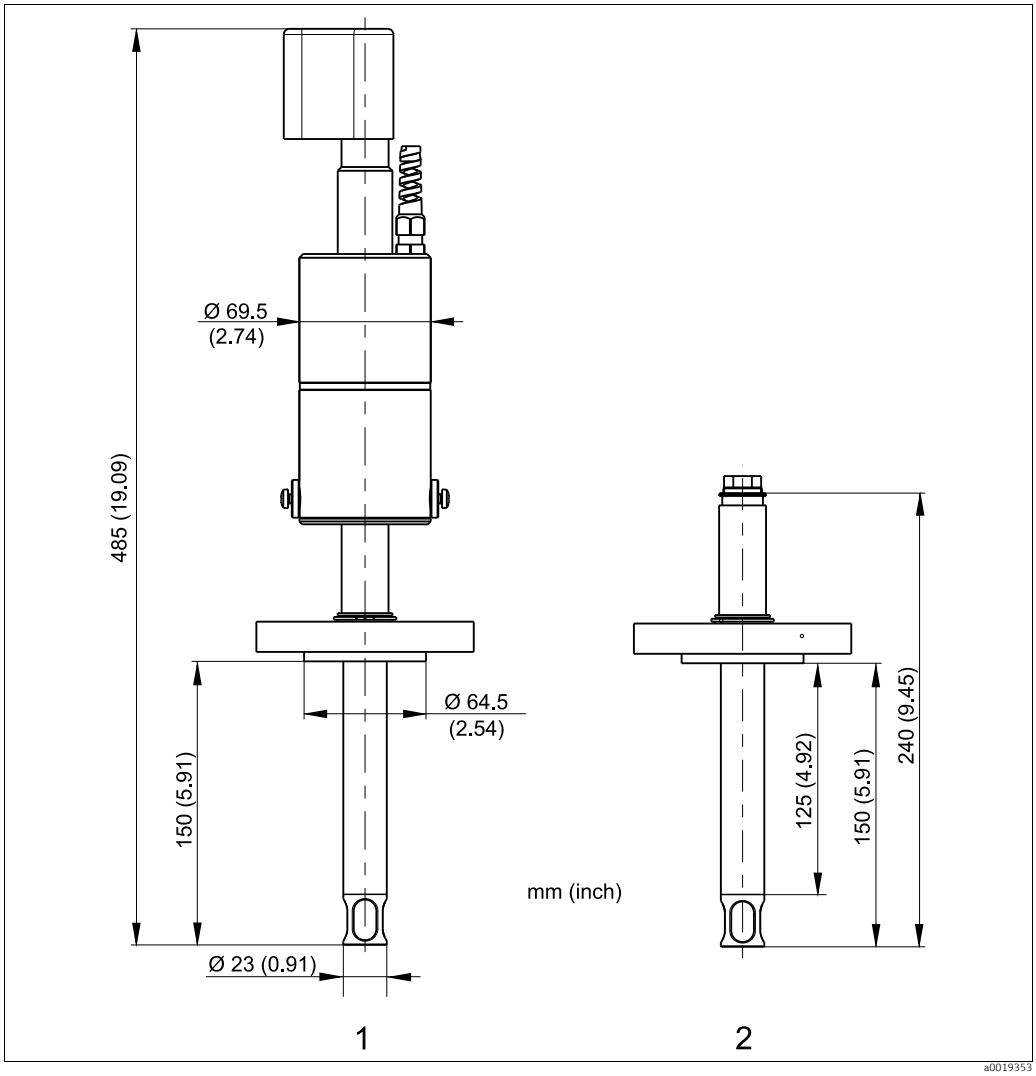

Dimensions (version V, flange)

1 With sensor protection cover
2 Without sensor protection cover

Weight

Assembly with process connections A to U	0.5 to 1.4 kg (1.1 to 3.1 lbs)
Assembly with process connections V and W	approx. 2.5 kg (5.5 lbs)
Protection cover	approx. 1.0 kg (2.2 lbs)

Materials

In contact with medium

Seals:	EPDM, FDA according to 21CFR 177.2600, USP Class VI FKM (Viton), FDA according to 21CFR 177.2600, USP Class VI Silicone, FDA according to 21CFR 177.2600, USP Class VI FFKM (Kalrez) on request
Assembly:	Stainless steel 1.4435 (AISI 316 L) Alloy C22 PVDF PEEK

Not in contact with medium

Union nut:	Stainless steel 1.4404 (AISI 316 L) optional nickel-plated brass
Protection cover:	POM black

Process connections

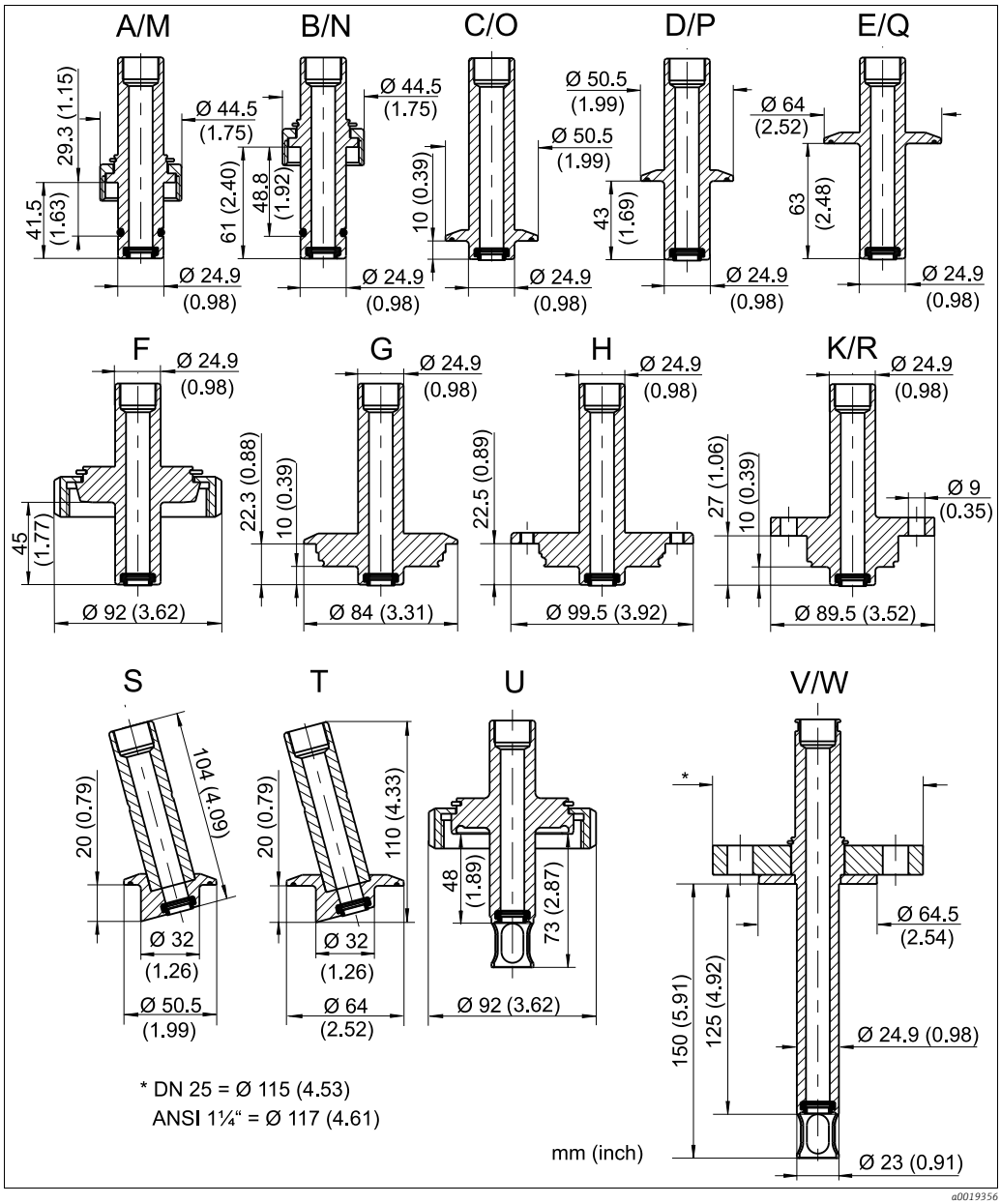

Process connections

- *A DN 25 standard / 41.5 mm (1.6") / with PM*
- *B DN 25 B.Braun port / 61 mm (2.4") / with PM*
- *C Clamp 1.5" / 10 mm (0.4") / with PM*
- *D Clamp 1.5" / 43 mm (1.7") / with PM*
- *E Clamp 2" / 63 mm (2.5") / with PM*
- *F Dairy fitting DN 50 DIN 11851 / 45 mm (1.8") / with PM*
- *G Varivent DN 40-125 / 10 mm (0.4") / with PM*
- *H APV DN 40-100 / 10 mm (0.4") / with PM*
- *K Neumo BioControl D 50 / 10 mm (0.4") / with PM*
- *M DN 25 standard / 41.5 mm (1.6") / without PM*
- *N DN 25 B.Braun port / 61 mm (2.4") / without PM*
- *O Clamp 1.5" / 10 mm (0.4") / without PM*
- *P Clamp 1.5" / 43 mm (1.7") / without PM*
- *Q Clamp 2" / 63 mm (2.5") / without PM*
- *R Neumo BioControl D 50 / 10 mm (0.4") / without PM*
- *S Clamp 1.5" angular 15° / 20 mm (0.8") / without PM*
- *T Clamp 2" angular 15° / 20 mm (0.8") / without PM*
- *U DIN 11864-1-A / aseptic DN 50 / without PM*
- *V Flange DN 25 / 150 mm (5.9") / without PM*
- *W Flange ANSI 150 lbs 1¼" / 150 mm (5.9") / without PM*

Fitted sensors

Versions A to U: sensors (gel and KCl) with 120 mm in length

Versions V and W: sensors (gel and KCl) with 225 mm in length

On request this assembly is available for longer sensors up to 425 mm.

Leakage monitoring (optional)

Leakage monitoring (a bore hole 10 mm (0.39") above the process connection) indicates any leaks in the molded seal. In the event of a leak, small amounts of fluid escape through the monitoring hole.
The molded seal must then be replaced.

Leakage monitoring is mandatory for 3-A certification (consider this when ordering).

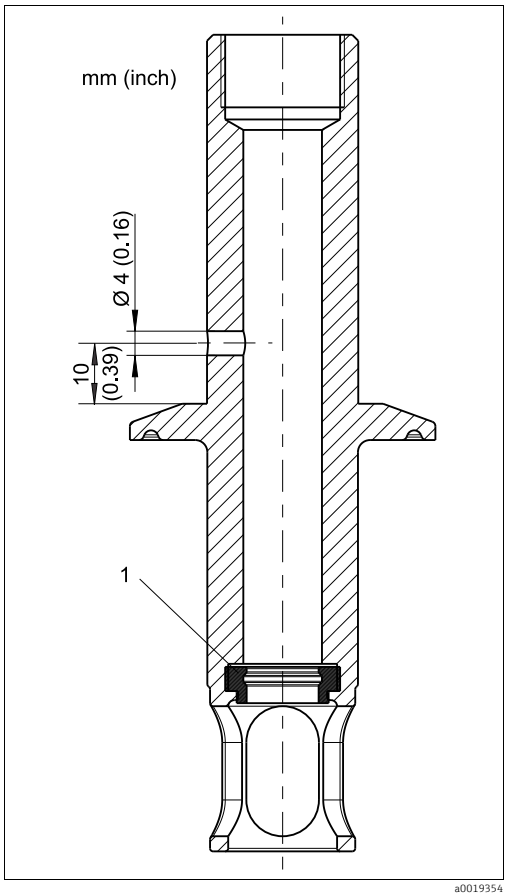

Leakage monitoring

1 Molded seal (seals to the process)

Ordering information

Scope of delivery

The scope of delivery comprises:
- Ordered assembly version
- Operating Instructions, English.

Order code

Enter the following address in your browser to access the product page:
www.products.endress.com/cpa442

1. You can choose from the following options on the product page located on the right:

Product page function
:: Add to product list
:: Price & order information
:: Compare this product
:: Configure this product

2. Click "Configure this product".
3. The configurator opens in a separate window. You can now configure your device and receive the complete order code that applies for the device.
4. Afterwards, export the order code as a PDF or Excel file. To do so, click the appropriate button at the top of the page.

Possible combinations

The following table shows you all possible combinations of the assembly:

	Process connection																			
	A	B	C	D	E	F	G	H	K	M	N	O	P	Q	R	S	T	U	V	W
Material 316 L R_a = 0.76	x	x	x	x	x	x	x	x	x	x	x	x	x	x	x	x	x	x	x	x
Material 316 L R_a = 0.38	x	x	x	x	x	x	x	x	x	x	x	x	x	x	x	x	x	x	x	x
Material Alloy R_a = 0.76										x			x							
Material Alloy R_a = 0.38										x			x							
Material PVDF										x	x		x							
Material PEEK										x	x		x							
EHEDG	x	x	x	x	x	x	x	x	x	x	x	x	x	x	x	x	x	x	x	x
EHEDG, EN 10204	x	x	x	x	x	x	x	x	x	x	x	x	x	x	x	x	x	x	x	x
EHEDG, EN 10204, Pharma	x	x	x	x	x	x	x	x	x	x	x	x	x	x	x	x	x	x		
3-A, EHEDG			x	x	x		x	x	x			x	x	x	x	x	x	x		
3-A, EHEDG, EN 10204			x	x	x		x	x	x			x	x	x	x	x	x	x		
Seal, EPDM	x	x	x	x	x	x	x	x	x	x	x	x	x	x	x	x	x	x	x	x
Seal, FKM	x	x	x	x	x	x	x	x	x	x	x	x	x	x	x	x	x	x	x	x
Seal, silicone	x	x	x	x	x	x	x	x	x	x	x	x	x	x	x	x	x	x	x	x
with protection guard	x	x	x	x	x	x	x	x	x	x	x	x	x	x	x			x	x	x
without protection guard	x	x	x	x	x	x	x	x	x	x	x	x	x	x	x	x	x	x		
without leakage detection	x	x	x	x	x	x	x	x	x	x	x	x	x	x	x	x	x	x	x	x
with leakage detection	x	x	x	x	x	x	x	x	x	x	x	x	x	x	x	x	x	x		
Protection cover										x	x			x					x	x
Brass union nut	x	x								x	x									

Other combinations on request

Product structure

The following product structure represents the status of printing. You can create a complete and valid order code on the Internet using the configurator tool.

Process connection, immersion depth, potential matching (PM)								
A	DN 25 standard / 41.5 mm (1.6'') installation depth without protection guard, with PM							
B	DN 25 B. Braun port / 61 mm (2.4'') installation depth without protection guard, with PM							
C	Clamp; 1.5'' / 10 mm (0.4'') installation depth without protection guard, with PM							
D	Clamp; 1.5'' / 43 mm (1.7'') installation depth without protection guard, with PM							
E	Clamp; 2'' / 63 mm (2.5'') installation depth without protection guard, with PM							
F	DN 50 dairy fitting / 45 mm (1.8'') installation depth without protection guard, with PM							
G	Varivent N = 68 mm DN 40-125 / 10 mm (0.4'') installation depth without protection guard, with PM							
H	APV DN 40-100 / 10 mm (0.4'') installation depth without protection guard, with PM							
K	Neumo BioControl D 50/ 10 mm (0.4'') installation depth without protection guard, with PM							
M	DN 25 standard / 42 mm (1.6'') installation depth without protection guard, without PM							
N	DN 25 B. Braun port / 61 mm (2.4'') installation depth without protection guard, without PM							
O	Clamp; 1.5'' / 10 mm (0.4'') installation depth without protection guard, without PM							
P	Clamp; 1.5'' / 43 mm (1.7'') installation depth without protection guard, without PM							
Q	Clamp; 2'' / 63 mm (2.5'') installation depth without protection guard, without PM							
R	Neumo BioControl D 50/ 10 mm (0.4'') installation depth without protection guard, without PM							
S	Clamp; 1.5'' oblique / 20 mm (0.8'') installation depth without protection guard, without PM							
T	Clamp; 2'' oblique / 20 mm (0.8'') installation depth without protection guard, without PM							
U	DIN 11864-1-A aseptic DN 50 / without PM							
V	Flange DN 25 / 150 mm (5.9") installation depth with protection guard, without PM							
W	Flange ANSI 150 lbs, 1¼" / 150 mm (5.9") installation depth with protection guard, without PM							
	Material, surface roughness							
	1	Stainless steel 1.4435 (AISI 316L), surface finish R_a = 0.76 µm						
	2	Stainless steel 1.4435 (AISI 316L), surface finish R_a = 0.38 µm /with inspection certificate EN 10204-3.1						
	3	Alloy C22, surface finish R_a = 0.76 µm /with inspection certificate EN 10204-3.1						
	4	Alloy C22, surface finish R_a = 0.38 µm /with inspection certificate EN 10204-3.1						
	7	PVDF (polyvinylidenefluoride)						
	8	PEEK (polyetheretherketone)						
		Approval, certificates						
		A	EHEDG cleanable and sterilizable					
		B	EHEDG cleanable and sterilizable + EN 10204-3.1					
		C	EHEDG cleanable and sterilizable + EN 10204-3.1 + Pharma CoC					
		E	3-A, EHEDG cleanable and sterilizable					
		F	3-A, EHEDG cleanable and sterilizable + EN 10204-3.1					
			Seal, wetted parts					
			1	EPDM molded seal (complying with FDA requirements, USP Class VI)				
			2	FKM (Viton®) molded seal (complying with FDA requirements, USP Class VI)				
			3	Silicone molded seal (complying with FDA requirements, USP Class VI)				
				Sensor protection guard				
				A	With integrated sensor protection guard (+ 25 mm installation depth)			
				B	Without sensor protection guard (+ 20 mm free installation depth required)			
					Version			
					1	Basic version		
					2	With leakage detection, 3-A		
						Additional option		
						1	Basic version	
						2	Protection cover 316 / POM, KCl sensor, chemical capable	
						3	Union nut G1¼, nickel plated brass	
CPA442-								complete order code

Process connection Clamp 1.5" with OD of 50.5 mm (1.99")
- complies with ASME-BPE 2009
- complies with DN 40 DIN 32676 2001
- complies with NW 38 ISO 2852

Process connection Clamp 2" with OD of 64 mm (2.52")
- complies with ASME-BPE 2009
- complies with DN 50 DIN 32676 2001
- complies with NWsd 51-40 ISO 2852

Certificates and approvals

Hygienic certificates

FDA
All materials in contact with medium are listed at FDA.

3-A
Certified according to 3-A Standard 74-05 ("3-A Sanitary Standards for Sensor and Sensor Fittings and Connections Number 74-05").
(for versions with leakage monitoring **and** process connections C, D, E, G, H, K, O, P, Q, R, S, T, U)

TSE/BSE
No material of animal origin is used. Origin, production and processing are free of TSE/BSE.
(deliverable via CoC certificate)

USP Class VI
Certificate (Certificate of Compliance) according to USP (United States Pharmacopeia) part <87> and part <88> class VI
The seals made of EPDM, FKM and silicone are approved.

EHEDG
Certified for cleanability and sterilizability according to EHEDG

Pharma CoC
Manufacturer's certificate according to published Endress+Hauser specification.

Material inspection certificate

3.1
Material inspection certificate according to EN 10204 - 3.1

Surface finish
Inspection certificate according to EN 10204 - 3.1

Pressure equipment directive

DGRL 97/23/EG
Certificate of compliance according to pressure equipment directive 97/23/EG

Accessories

Seals

- EPDM seal set for CPA442; order no. 51507170
- FKM (Viton®) seal set for CPA442; order no. 51507169
- Silicone seal set for CPA442; order no. 51507171

Welding sockets

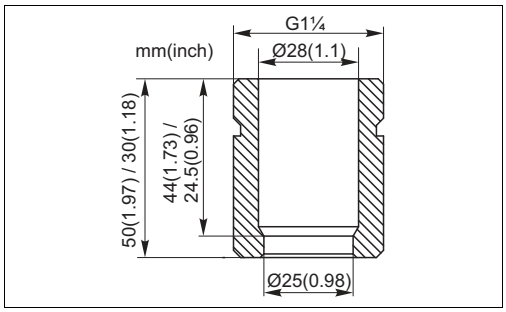

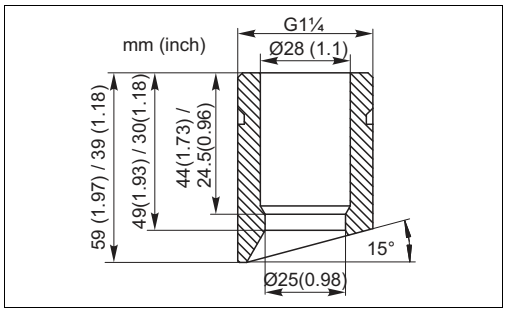

- DN25 safety welding socket, straight, stainless steel 1.4435, L=50; order no. 51508049
  only for CPA442-B******
  only for CPA442-N******
- DN25 safety welding socket, angled, stainless steel 1.4435, L=50/60; order no. 51508050
  only for CPA442-B******
  only for CPA442-N******
- DN25 safety welding socket, straight, stainless steel 1.4435, L=30; order no. 51508051
  only for CPA442-A******
  only for CPA442-M******
- DN25 safety welding socket, angled, stainless steel 1.4435, L=30/40; order no. 51508052
  only for CPA442-A******
  only for CPA442-M******

Already existing standard welding sockets (of CPA440 / CPA441 / CPA460) order no. 50005192 and 50028446 are also suitable for CPA442.

Dummy plug

Dummy plug for G1¼ process connection,
- Stainless steel 1.4435 (AISI 316L), FKM (Viton®) seal, G1¼ internal thread; order no. 51502800

Sensors

Orbisint CPS11/CPS11D
- pH sensor for process applications
- Optional SIL version for connection to SIL approved transmitters
- With dirt-repellent PTFE diaphragm
- Ordering per product structure (--> Online configurator, www.products.endress.com/cps11 or www.products.endress.com/cps11d)
- Technical Information TI028C/07/EN

Orbisint CPS12/CPS12D
- ORP electrode for process applications
- With dirt-repellent PTFE diaphragm
- Ordering per product structure (--> Online configurator, www.products.endress.com/cps12 or www.products.endress.com/cps12d)
- Technical Information TI367C/07/EN

Ceraliquid CPS41/CPS41D
- pH sensor
- With ceramics diaphragm and liquid KCl electrolyte
- Ordering per product structure (--> Online configurator, www.products.endress.com/cps41 or www.products.endress.com/cps41d)
- Technical Information TI079C/07/EN

Ceraliquid CPS42/CPS42D
- ORP electrode
- With ceramics diaphragm and liquid KCl electrolyte
- Ordering per product structure (--> Online configurator, www.products.endress.com/cps42 or www.products.endress.com/cps42d)
- Technical Information TI373C/07/EN

Ceragel CPS71/CPS71D
- pH sensor
- With double chamber reference system and integrated bridge electrolyte
- Ordering per product structure (--> Online configurator, www.products.endress.com/cps71 or www.products.endress.com/cps71d)
- Technical Information TI245C/07/EN

Ceragel CPS72/CPS72D
- ORP electrode
- With double chamber reference system and integrated bridge electrolyte
- Ordering per product structure (--> Online configurator, www.products.endress.com/cps72 or www.products.endress.com/cps72d)
- Technical Information TI374C/07/EN

Orbipore CPS91/CPS91D
- pH sensor
- With open aperture for media with high dirt load
- Ordering per product structure (--> Online configurator, www.products.endress.com/cps91 or www.products.endress.com/cps91d)
- Technical Information TI375C/07/EN

Orbipore CPS92/CPS92D
- ORP sensor
- With open aperture for media with high dirt load
- Ordering per product structure (--> Online configurator, www.products.endress.com/cps92 or www.products.endress.com/cps92d)
- Technical Information TI435C/07/EN

Tophit CPS471/CPS471D
- Sterilizable and autoclavable ISFET sensor for food and pharmaceuticals, process technology,
- water treatment and biotechnology;
- Ordering per product structure (--> Online configurator, www.products.endress.com/cps471 or www.products.endress.com/cps471d)
- Technical Information TI283C/07/EN

Tophit CPS441/CPS441D
- Sterilizable ISFET sensor for media with low conductivity, with liquid KCl electrolyte;
- Ordering per product structure (--> Online configurator, www.products.endress.com/cps441 or www.products.endress.com/cps441d)
- Technical Information TI352C/07/EN

Tophit CPS491/CPS491D
- ISFET sensor with open aperture for media with high dirt load;
- Ordering per product structure (--> Online configurator, www.products.endress.com/cps491 or www.products.endress.com/cps491d)
- Technical Information TI377C/07/EN

Oxymax COS22D
- Sterilizable sensor for dissolved oxygen
- Order as per product structure (--> Online configurator, www.products.endress.com/cos22d)
- Technical Information TI446C/07/EN



www.addresses.endress.com

Endress+Hauser

People for Process Automation