Fisher™ 4200 Electronic Position Transmitters (Discontinued Product)

Table of Contents

Introduction 1
Safety Instructions 2
Specifications 2
Inspection and Maintenance Schedules 2
Parts Ordering 3
Installation 3
Operation 5
Maintenance 5
Non-Fisher (OEM) Instruments, Switches, and Accessories 7
Latest Published Manual 9

Introduction

The product covered in this document is no longer available for purchase. This document, which includes the latest published version of the instruction manual, is made available to provide updates of newer safety procedures. Be sure to follow the safety procedures in this supplement as well as the specific instructions in the included instruction manual.

Part numbers in the included instruction manual should not be relied on to order replacement parts. For replacement parts, contact your Emerson sales office.

For more than 30 years, Fisher products have been manufactured with asbestos-free components. The included manual might mention asbestos containing parts. Since 1988, any gasket or packing which may have contained some asbestos, has been replaced by a suitable non-asbestos material. Replacement parts in other materials are available from your sales office.

Safety Instructions

Please read the safety warnings, cautions, and instructions carefully before using the product.

⚠ WARNING



These instructions cannot cover every installation and situation. Do not install, operate, or maintain this product without being fully trained and qualified in valve, actuator and accessory installation, operation and maintenance. To avoid personal injury or property damage it is important to carefully read, understand, and follow all of the contents of this manual, including all safety cautions and warnings. If you have any questions about these instructions, contact your Emerson sales office before proceeding.

Specifications

This product was intended for a specific range of service conditions--pressure, pressure drop, process and ambient temperature, temperature variations, process fluid, and possibly other specifications. Do not expose the product to service conditions or variables other than those for which the product was intended. If you are not sure what these conditions or variables are, contact your Emerson sales office for assistance. Provide the product serial number and all other pertinent information that you have available.

Inspection and Maintenance Schedules

All products must be inspected periodically and maintained as needed. The schedule for inspection can only be determined based on the severity of your service conditions. Your installation might also be subject to inspection schedules set by applicable governmental codes and regulations, industry standards, company standards, or plant standards.

In order to avoid increasing dust explosion risk, periodically clean dust deposits from all equipment.

When equipment is installed in a hazardous area location (potentially explosive atmosphere), prevent sparks by proper tool selection and avoiding other types of impact energy.

Parts Ordering

Whenever ordering parts for older products, always specify the serial number of the product and provide all other pertinent information that you can, such as product size, part material, age of the product, and general service conditions. If you have modified the product since it was originally purchased, include that information with your request.

NOTE

Recommended spare parts are typically available for 10 years after the last production on manufactured trim replacement parts and 5 years of best effort on die cast parts, elastomers, buyout components, and electronic components. After that time, service and parts for the discontinued products will be limited. Provide your Emerson sales office with existing process conditions to receive a quote for a suitable replacement product.

WARNING

Use only genuine Fisher replacement parts. Components that are not supplied by Emerson should not, under any circumstances, be used in any Fisher product. Use of components not supplied by Emerson may void your warranty, might adversely affect the performance of the product and could result in personal injury and property damage.

Installation

WARNING

Avoid personal injury or property damage from sudden release of process pressure or bursting of parts. Before mounting the product:

- **Do not install any system component where service conditions could exceed the limits given in this manual or the limits on the appropriate nameplates. Use pressure-relieving devices as required by government or accepted industry codes and good engineering practices.**
- **Always wear protective gloves, clothing, and eyewear when performing any installation operations.**
- **Do not remove the actuator from the valve while the valve is still pressurized.**
- **Disconnect any operating lines providing air pressure, electric power, or a control signal to the actuator. Be sure the actuator cannot suddenly open or close the valve.**
- **Use bypass valves or completely shut off the process to isolate the valve from process pressure. Relieve process pressure from both sides of the valve.**
- **Vent the pneumatic actuator loading pressure and relieve any actuator spring precompression so the actuator is not applying force to the valve stem; this will allow for the safe removal of the stem connector.**

- **Use lock-out procedures to be sure that the above measures stay in effect while you work on the equipment.**
- **The instrument is capable of supplying full supply pressure to connected equipment. To avoid personal injury and equipment damage, caused by sudden release of process pressure or bursting of parts, make sure the supply pressure never exceeds the maximum safe working pressure of any connected equipment.**
- **Severe personal injury or property damage may occur from an uncontrolled process if the instrument air supply is not clean, dry and oil-free, or noncorrosive gas. While use and regular maintenance of a filter that removes particles larger than 40 microns will suffice in most applications, check with an Emerson field office and Industry Instrument air quality standards for use with corrosive gas or if you are unsure about the proper amount or method of air filtration or filter maintenance.**
- **For corrosive media, make sure the tubing and instrument components that contact the corrosive media are of suitable corrosion-resistant material. The use of unsuitable materials might result in personal injury or property damage due to the uncontrolled release of the corrosive media.**
- **If natural gas or other flammable or hazardous gas is to be used as the supply pressure medium and preventive measures are not taken, personal injury and property damage could result from fire or explosion of accumulated gas or from contact with hazardous gas. Preventive measures may include, but are not limited to: Remote venting of the unit, re-evaluating the hazardous area classification, ensuring adequate ventilation, and the removal of any ignition sources.**
- **To avoid personal injury or property damage resulting from the sudden release of process pressure, use a high-pressure regulator system when operating the controller or transmitter from a high-pressure source.**

  The instrument or instrument/actuator assembly does not form a gas-tight seal, and when the assembly is in an enclosed area, a remote vent line, adequate ventilation, and necessary safety measures should be used. Vent line piping should comply with local and regional codes and should be as short as possible with adequate inside diameter and few bends to reduce case pressure buildup. However, a remote vent pipe alone cannot be relied upon to remove all hazardous gas, and leaks may still occur.
- **Personal injury or property damage can result from the discharge of static electricity when flammable or hazardous gases are present. Connect a 14 AWG / 2.08 mm^2 ground strap between the instrument and earth ground when flammable or hazardous gases are present. Refer to national and local codes and standards for grounding requirements.**
- **Personal injury or property damage caused by fire or explosion may occur if electrical connections are attempted in an area that contains a potentially explosive atmosphere or has been classified as hazardous. Confirm that area classification and atmosphere conditions permit the safe removal of covers before proceeding.**
- **Personal injury or property damage, caused by fire or explosion from the leakage of flammable or hazardous gas, can result if a suitable conduit seal is not installed. For explosion-proof applications, install the seal no more than 457 mm / 18 in. from the instrument when required by the nameplate. For ATEX applications use the proper cable gland certified to the required category. Equipment must be installed per local and national electric codes.**
- **Check with your process or safety engineer for any additional measures that must be taken to protect against process media.**
- **If installing into an existing application, also refer to the WARNING in the Maintenance section.**

Special Instructions for Safe Use and Installations in Hazardous Locations

Certain nameplates may carry more than one approval, and each approval may have unique installation requirements and/or conditions of safe use. Special instructions are listed by agency/approval. To get these instructions, contact Emerson sales office. Read and understand these special conditions of use before installing.

⚠ WARNING

Failure to follow conditions of safe use could result in personal injury or property damage from fire or explosion, or area re-classification.

Operation

With instruments, switches, and other accessories that are controlling valves or other final control elements, it is possible to lose control of the final control element when you adjust or calibrate the instrument. If it is necessary to take the instrument out of service for calibration or other adjustments, observe the following warning before proceeding.

⚠ WARNING

Avoid personal injury or equipment damage from uncontrolled process. Provide some temporary means of control for the process before taking the instrument out of service.

Maintenance

⚠ WARNING

Avoid personal injury or equipment damage from uncontrolled process. Provide some temporary means of control for the process before taking the instrument out of service.

- **Always wear protective gloves, clothing, and eyewear.**
- **Provide some temporary measure of control to the process before taking the instrument out of service.**
- **Provide a means of containing the process fluid before removing any measurement devices from the process.**

- **Disconnect any operating lines providing air pressure, electric power, or a control signal to the actuator. Be sure the actuator cannot suddenly open or close the valve.**
- **Use bypass valves or completely shut off the process to isolate the valve from process pressure. Relieve process pressure from both sides of the valve.**
- **Vent the pneumatic actuator loading pressure and relieve any actuator spring precompression so the actuator is not applying force to the valve stem; this will allow for the safe removal of the stem connector.**
- **Use lock-out procedures to be sure that the above measures stay in effect while you work on the equipment.**
- **Check with your process or safety engineer for any additional measures that must be taken to protect against process media.**

When using natural gas as the supply medium, or for explosion proof applications, the following warnings also apply:

- **Remove electrical power before removing any housing cover or cap. Personal injury or property damage from fire or explosion may result if power is not disconnected before removing the cover or cap.**
- **Remove electrical power before disconnecting any of the pneumatic connections.**
- **When disconnecting any of the pneumatic connections or any pressure retaining part, natural gas will seep from the unit and any connected equipment into the surrounding atmosphere. Personal injury or property damage may result from fire or explosion if natural gas is used as the supply medium and appropriate preventive measures are not taken. Preventive measures may include, but are not limited to, one or more of the following: ensuring adequate ventilation and the removal of any ignition sources.**
- **Ensure that all housing caps and covers are correctly installed before putting this unit back into service. Failure to do so could result in personal injury or property damage from fire or explosion.**

Instrument Mounted on Tank or Cage

⚠ WARNING

For instruments mounted on a tank or displacer cage, release trapped pressure from the tank and lower the liquid level to a point below the connection. This precaution is necessary to avoid personal injury from contact with the process fluid.

Instruments With a Hollow Displacer or Float

⚠ WARNING

For instruments with a hollow liquid level displacer, the displacer might retain process fluid or pressure. Personal injury and property might result from sudden release of this pressure or fluid. Contact with hazardous fluid, fire, or explosion can be caused by puncturing, heating, or repairing a displacer that is retaining process pressure or fluid. This danger may not be readily apparent when disassembling the sensor or removing the displacer. A displacer that has been penetrated by process pressure or fluid might contain:

- **pressure as a result of being in a pressurized vessel**
- **liquid that becomes pressurized due to a change in temperature**
- **liquid that is flammable, hazardous or corrosive.**

Handle the displacer with care. Consider the characteristics of the specific process liquid in use. Before removing the displacer, observe the appropriate warnings provided in the sensor instruction manual.

Non-Fisher (OEM) Instruments, Switches, and Accessories

Installation, Operation, and Maintenance

Refer to the original manufacturer's documentation for Installation, Operation and Maintenance safety information.

Fisher.com

Facebook.com/FisherValves

LinkedIn.com/groups/3941826

X.com/FisherValves

D200354X012 © 2026 Emerson. All rights reserved. The Emerson logo is a trademark and service mark of Emerson Electric Co. Fisher is a mark of an entity in the Emerson family of businesses. All other marks are the property of their respective owners.

Neither Emerson, nor any of its affiliated entities assume responsibility for the selection, use or maintenance of any product. Responsibility for proper selection, use, and maintenance of any product remains solely with the purchaser and end user.

The contents of this publication are presented for informational purposes only, and while every effort has been made to ensure their accuracy, they are not to be construed as warranties or guarantees, express or implied, regarding the products or services described herein or their use or applicability. All sales are governed by our terms and conditions, which are available upon request. We reserve the right to modify or improve the designs or specifications of such products at any time without notice.

Emerson
Marshalltown, Iowa 50158 USA
Sorocaba, 18087 Brazil
Cernay, 68700 France
Dubai, United Arab Emirates
Singapore 128461 Singapore

www.Fisher.com

FISHER™

EMERSON™

Fisher™ 4200 Electronic Position Transmitters

Contents

Introduction 2
Scope of Manual 2
Description 2
Specifications 5
Educational Services 5
Installation 6
Hazardous Area Classifications and Special Instructions for "Safe Use" and Installations in Hazardous Locations 6
Mechanical Connections 7
Sliding-Stem Actuator Mounting 7
Rotary-Shaft Actuator Mounting 8
Long-Stroke Sliding-Stem Actuator Mounting Fisher 585C and 470-16 8
Long-Stroke Sliding-Stem Actuator Mounting Fisher 585CLS and 490 9
Electrical Connections 10
Conduit 10
Field Wiring 10
Potentiometer Alignment 13
Direct or Reverse Action 14
Operating Information 15
Initial Considerations 15
Transmitter and Position Switch Conditions 15
Normal Operation 16
Calibration 17
Test Equipment Required 18
Test Connections to the Field Wiring Compartment 19
Transmitter Circuit Zero and Span Adjustment 20
High and Low Position Switch Adjustment 20
Setting the High Position Switch 21
Setting the High Position Switch Deadband 21
Setting the Low Position Switch 21
Setting the Low Position Switch Deadband 22
Position Switch Circuit Shutoff 22
Principle of Operation 22
Transmitter Circuit 23
Position Switch Circuit 24
Maintenance 25
Troubleshooting Procedures 26
Transmitter Circuit 26
Position Switch Circuit 26
Parts Ordering 31
Parts Kits 31
Parts List 32

Figure 1. Typical Fisher 4200 Position Transmitters


W4273-1

SLIDING-STEM ACTUATOR MOUNTING


W4274-1

ROTARY ACTUATOR MOUNTING

Introduction

Scope of Manual

This instruction manual provides installation, operating, calibration, maintenance, and parts ordering information for Fisher 4200 electronic position transmitters (figure 1). Refer to separate instruction manuals for information on the actuator and valve.

Do not install, operate, or maintain a 4200 electronic position transmitter without being fully trained and qualified in valve, actuator, and accessory installation, operation, and maintenance. **To avoid personal injury or property damage, it is important to carefully read, understand, and follow all of the contents of this manual, including all safety cautions and warnings.** If you have any questions regarding these instructions contact your Emerson sales office before proceeding.

Description

4200 electronic position transmitters combine Fisher field-proven electronic and mechanical expertise in a versatile, accurate instrument. They sense the position of a sliding-stem actuator, rotary actuator, vent, damper, or other device and send a standard (4-20 mA) output signal to an indicating device, a process control system or programmable logic controller. 4200 transmitters are available as a transmitter only, as a transmitter with integral high and low position switches, or with high and low position switches only. Refer to the nameplate to determine the type of transmitter. Use the Type number and table 2 to determine the output and travel ranges available from the transmitter.

When the instrument is mounted, the potentiometer shaft (figure 2) is mechanically connected to the device to sense mechanical motion. Except for the 4215 transmitter, all types of transmitters use a single potentiometer for position input. The 4215 transmitter uses dual potentiometers mounted on the same shaft. This permits using individual potentiometers for the transmitter and the position switch circuits, providing additional electrical isolation. For long-stroke applications, a multi-turn potentiometer attached to a travel transducer assembly senses linear motion of the actuator stem or other device.

Figure 2. Transmitter Dimensions

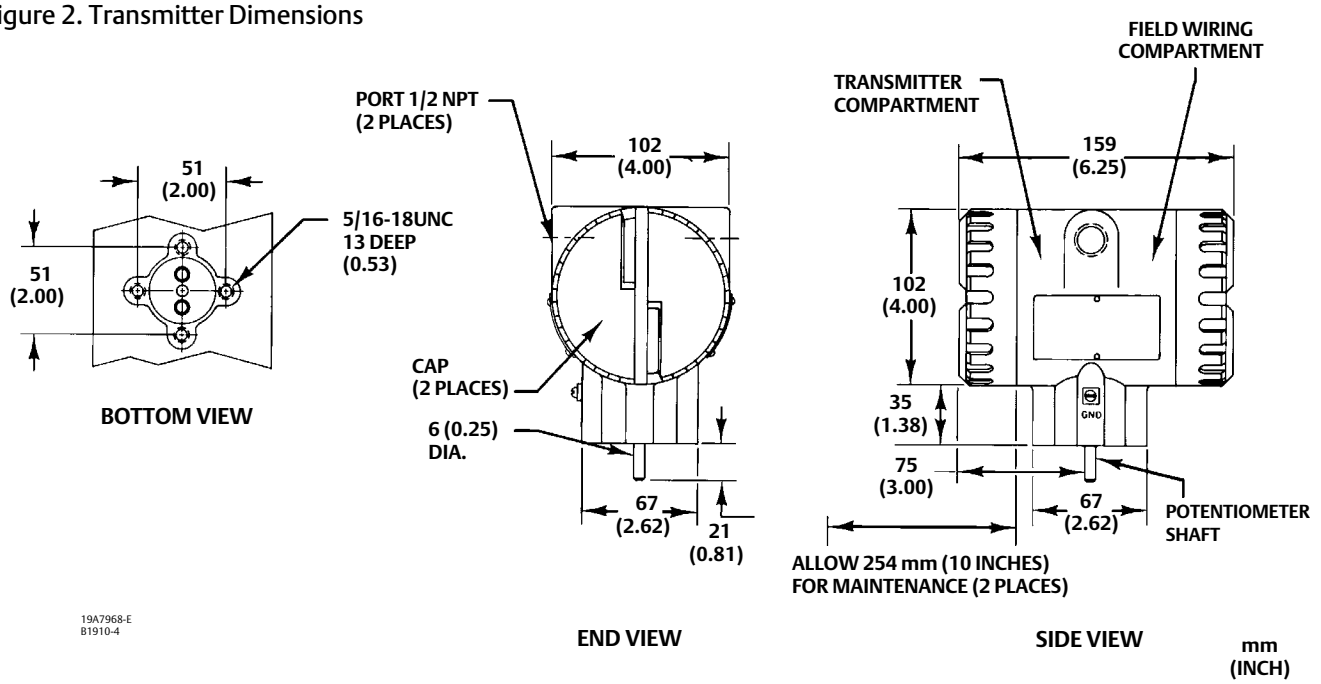

Table 1. Specifications

Available Configurations

See table 2

Input Signal

Source: Single potentiometer is standard or a dual potentiometer is available for the 4215 only. Refer to table 3 for zero and span limits

Output Signal

Range: 4 to 20 milliampere DC transmitter output (4210, 4211, 4215, 4220, and 4221 transmitters)
Load Impedance (transmitter only): See figure 3
Output Current Limit: 30 milliamperes DC maximum
Switches: ON/OFF condition of high and low position switch relay (SPDT)

Power Supply Requirements

	Transmitter Terminal Voltage (VDC)		Current[1] Required (mA)
	Min	Max	
Transmitter Only	11	30	20 max.
Position Switch with Transmitter	20	30	80 max.
Position Switch without Transmitter	20	30	50 max.

1. Values indicate minimum power supply capabilities.

Recommended Power Supply

24 volts DC nominal

Position Switch Relays

Type: Two single-pole, double-throw relays (SPDT)
Service Rating: The relay contact rating is 5 amperes at either 30 volts DC or 120 volts AC (resistive load)
Life Expectancy: 100,000 operations at rated load, or 50,000 operations at a typical inrush current of 10 amperes with 120 volts AC lamp or motor load

Reference Accuracy

±1% of output span. Includes combined effects of hysteresis, linearity, and deadband

Repeatability

±0.25% of span

Operating Influences

Ambient Temperature: For a 38°C (100°F) change in normal operating conditions, maximum zero shift is ±0.5%; maximum span shift is ±0.75% of span
Power Supply: Output signal changes less than ±0.1% when operating terminal voltage varies between 11 and 30 volts DC

Electromagnetic Compatibility for 4211 and 4221: Meets EN 61326-1:2013
Immunity—Industrial locations per Table 2 of the EN 61326-1 standard. Performance is shown in table 4 below.
Emissions—Class A
ISM equipment rating: Group 1, Class A

Operating Conditions

Condition	Normal and Operative Limits	Transportation and Storage Limits	Normal Reference
Ambient Temperature	-40 to 71°C (-40 to 160°F)	-50 to 80°C (-60 to 180°F)	25°C (77°F)
Ambient Relative Humidity	10 to 95%	10 to 95%	40%

Mounting

The instrument can be mounted on the actuator of sliding-stem or rotary valves or on other devices

Electrical Classification

CSA—Intrinsically Safe, Explosion-proof, Dust Ignition-proof
FM—Intrinsically Safe, Explosion-proof, Dust Ignition-proof, Non-Incendive
ATEX—Intrinsically Safe, Type n, Flameproof
IECEx—Intrinsically Safe, Type n, Flameproof

Other Classifications/Certifications

CUTR— Customs Union Technical Regulations (Russian, Kazakhstan, Belarus, and Armenia)
KTL—Korea Testing Laboratory (South Korea)
NEPSI—National Supervision and Inspection Centre for Explosion Protection and Safety of Instrumentation (China)
PESO—Petroleum and Explosives Safety Organization (India)
Contact your Emerson sales office for classification/certification specific information

Housing

NEMA 4X; CSA Enclosure 4X; IP66

Approximate Weight

Transmitter Without Mounting Bracket: 1.8 kg (4 pounds)

NOTE: Specialized instrument terms are defined in ANSI/ISA Standard 51.1 - Process Instrument Terminology.

Table 2. Available Fisher 4200 Series Configurations

TYPE NUMBER	TRANSMITTER	ELECTRICAL POSITION SWITCHES	TRAVEL		DUAL POTENTIOMETER
			Standard Stroke Up to 105 mm(1) (Up to 4.125 Inches)	Long-Stroke Up to 610 mm(1) (Up to 24 Inches)	
4210	X	X	X	---	---
4211	X	---	X	---	---
4212	---	X	X	---	---
4215	X	X	X	---	X
4220	X	X	---	X	---
4221	X	---	---	X	---
4222	---	X	---	X	---

1. See table 3 for zero and span limits.

Table 3. Zero and Span Limits(1)

TYPE NUMBER	DEGREES OF POTENTIOMETER ROTATION			CONNECTION(2)	SLIDING-STEM ACTUATOR TRAVEL					
					mm			INCHES		
	Zero Position	Span			Zero Position	Span		Zero Position	Span	
		Min.	Max.			Min.	Max.		Min.	Max.
4210 4211 4212 4215	0 to 90	15	90	1	0 to 51	8	51	0 to 2	0.315	2
				2	0 to 105	17	105	0 to 4.125	0.670	4.125
4220 4221 4222	0 to 884	150	884	12-Inch Transducer	0 to 305	105	305	0 to 12	4.125	12
				24-Inch Transducer	0 to 610	305	610	0 to 24	12	24

1. Zero position is the range of values over which the transmitter zero can be adjusted. Span is the range of shaft rotation or stem travel the transmitter span can be adjusted. For example, a zero position of 45 degrees and a span of 15 degrees means the transmitter output is 4 mA DC after 45 degrees of shaft rotation. The output then increases from 4 mA DC to 20 mA DC as the shaft rotates from 45 to 60 degrees.
2. Refer to figures 15, 22, and 23 for locations of connections.

Figure 3. Power Supply Requirements

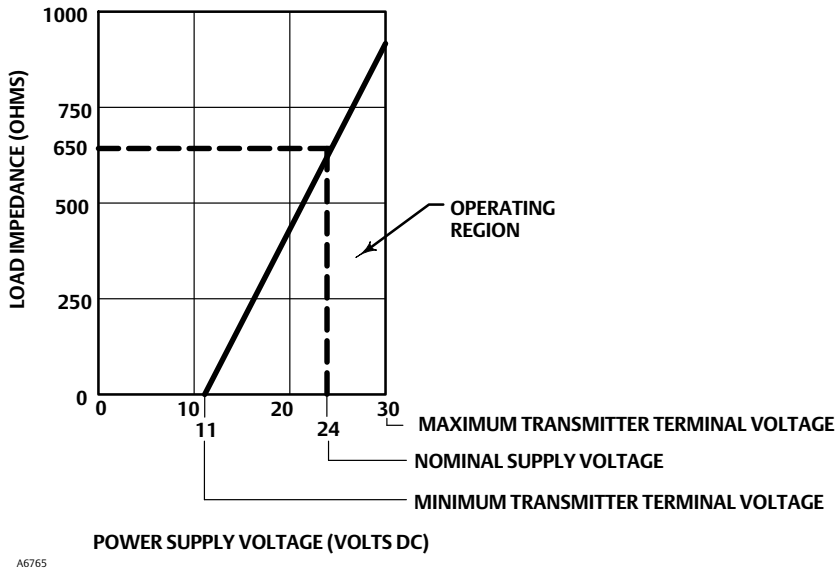

Table 4. Fisher 4211 and 4221 Position Transmitter EMC Summary Results—Immunity

Port	Phenomenon	Basic Standard	Test Level	Performance Criteria(1)
Enclosure	Electrostatic Discharge (ESD)	IEC 61000-4-2	4 kV contact 8 kV air	A
	Radiated EM field	IEC 61000-4-3	80 to 1000 MHz @ 10V/m with 1 kHz AM at 80% 1400 to 2000 MHz @ 3V/m with 1 kHz AM at 80% 2000 to 2700 MHz @ 1V/m with 1 kHz AM at 80%	A
	Rated power frequency magnetic field	IEC 61000-4-8	60 A/m at 50 Hz	A
I/O signal/control	Burst (fast transients)	IEC 61000-4-4	1 kV	A
	Surge	IEC 61000-4-5	1 kV (line to ground only, each)	B
	Conducted RF	IEC 61000-4-6	150 kHz to 80 MHz at 3 Vrms 1 kHz AM at 80%	A

Specification limit = ±1% of span
1. A = No degradation during testing. B = Temporary degradation during testing, but is self-recovering.

For instruments equipped with position switches, the high relay position switch can be set at any point of travel. The low relay position switch can be offset from the high relay position switch trip point by as little as 1/20 of the travel. In the event of a power loss both position switch relays de-energize, indicating loss of transmitter power.

Specifications

Specifications for the 4200 transmitters are listed in table 1.

⚠ WARNING

This product is intended for a specific current range, temperature range and other application specifications. Applying different current, temperature and other service conditions could result in malfunction of the product, property damage or personal injury.

Educational Services

Emerson Automation Solutions
Educational Services - Registration
Phone: +1-800-338-8158
E-mail: education@emerson.com
emerson.com/mytraining

Installation

⚠ WARNING

Always wear protective clothing and eyewear when performing any installation operations to avoid personal injury or property damage.

Check with your process or safety engineer for any additional measures that must be taken to protect against process media.

If installing into an existing application, also refer to the WARNING at the beginning of the Maintenance section in this instruction manual.

When a 4200 transmitter is ordered with an actuator, the factory mounts the transmitter and adjusts the zero and span for the travel specified on the order. Make field wiring connections as described in the electrical connections procedure and fine tune the transmitter to the application. Refer to the appropriate actuator and valve instruction manuals to install the attached assemblies.

If the transmitter has been ordered separately, or removed for maintenance, perform the appropriate portion of the Mechanical Connections, Electrical Connections, Potentiometer Alignment, and Calibration procedures.

The transmitter can be mounted in any of four positions. Mount the transmitter vertically or horizontally depending on the application requirements. Refer to figures 15 through 23 for examples of typical actuator mounting assemblies.

As an aid to installation, and to understand the transmitter design in general, refer to figure 2 to see the location of the transmitter compartment and the field wiring compartment. The transmitter compartment contains the transmitter and/or the position switch circuit on the printed wiring board, associated wiring assemblies, adjustment potentiometers, and the potentiometer that senses position. Remove the cover on the transmitter compartment to gain access to this compartment. Note that you will need to loosen the set screw (key 106) before removing the cover. The transmitter compartment is adjacent to the ⊣▷⊢ symbol on the housing.

Except for a 4211 or 4221 transmitter, the field wiring compartment contains a printed wiring board with the terminal blocks (figure 4) for connecting field wiring and associated cable assemblies. It also contains the position switch relays which are mounted on the printed wiring board. Remove the cap adjacent to the + and - symbols on the housing to access this compartment. Note that you will need to loosen the set screw (key 106) before removing the cover.

For a 4211 or 4221 transmitter without position switch circuits, the field wiring compartment contains a barrier strip for installation of the transmitter field wiring (figure 4).

Figure 2 shows the location of the ports into the field wiring compartment. Two ports are available for routing the transmitter and/or position switch wiring into the transmitter housing. After transmitter installation, install a plug in the unused port. When installing the transmitter, allow sufficient space for removing the covers to perform maintenance and to make the wiring connections. Figure 2 also shows the basic transmitter outline dimensions.

Hazardous Area Classifications and Special Instructions for “Safe Use” and Installations in Hazardous Locations

Refer to the following instruction manual supplements for approval information.

- CSA Hazardous Area Approvals - Fisher 4200 Electronic Position Transmitters (D104308X012)
- FM Hazardous Area Approvals - Fisher 4200 Electronic Position Transmitters (D104309X012)

- ATEX Hazardous Area Approvals - Fisher 4200 Electronic Position Transmitters (D104310X012)
- IECEx Hazardous Area Approvals - Fisher 4200 Electronic Position Transmitters (D104311X012)

All documents are available from your Emerson sales office or at www.Fisher.com. Contact your Emerson sales office for all other approval/certification information.

Mechanical Connections

Sliding-Stem Actuator Mounting; 4210, 4211, 4212, and 4215 Transmitters

Use the following general procedures and figures 15, 16, 17, and 18 to mount the transmitter on sliding-stem actuators, standard stroke up to 105 mm (4.125 inches) travel.

Refer to figure 15 for key number locations for this example.

1. Install the transmitter on the mounting plate (key 21) with two cap screws (key 32).
2. Bolt the stem mounting bracket and spacer (keys 34 and 39) to the stem connector on the actuator stem. Replace the stem connector cap screws with the two cap screws (key 35) furnished with the stem mounting bracket.
3. If necessary, refer to the appropriate procedures in the actuator instruction manual to reconnect the actuator stem to the valve stem.
4. Fasten the stem bracket (key 33) to the stem mounting bracket (key 34) with two cap screws (key 37) centered in the slots of the stem bracket. Tighten the cap screws slightly.
5. On the transmitter, install the pickup pin into the lever assembly (key 30) in the position to match the application. Refer to table 3 and figure 15.
6. Temporarily connect the 24 volt DC power supply to the instrument as indicated in figure 4.
7. Perform the potentiometer alignment procedures before mounting the transmitter on the actuator. To simulate mid-stroke position in step 4 of the procedure, move the lever assembly (key 30) until its center line is parallel with the center line of the operating arm (key 25). After completing step 9 of the potentiometer alignment procedure, remove the 24 volts DC, and continue the actuator mounting procedure as described in the following steps.
8. Stroke the actuator to the mid position of the valve travel.
9. Fit the pickup pin, located in the lever assembly (key 30), into the horizontal slot in the stem bracket (key 33). Bolt the mounting plate (key 21) to the actuator with cap screws, washers, and spacers (keys 23, 24, and 22) using the two tapped holes in the side of the actuator yoke.
10. Use the mounting plate slots, which allow the lever assembly (key 30) and the operating arm (key 25) to be nearly parallel, and position the long edge of the mounting plate parallel with the actuator stem. Tighten the bolts securely.
11. Loosen the two cap screws (key 37) connecting the stem bracket (key 33) to the stem mounting bracket (key 34). Manually move the lever assembly (key 30) until its center line is parallel with the center line of the operating arm (key 25).
12. Tighten the two cap screws (key 37) in the slotted holes.
13. Stroke the actuator to ensure that full travel is allowed.
14. Perform the electrical connection and direct and reverse action procedures.
15. Verify potentiometer alignment by performing the potentiometer alignment procedure.

Rotary-Shaft Actuator Mounting; 4210, 4211, 4212, and 4215 Transmitters

Use the following general procedures and figures 19, 20, and 21 to mount the transmitter on rotary-shaft actuators.

Refer to figure 19 for key number locations for this example.

1. Install the transmitter on the mounting plate (key 21) with two cap screws (key 32). The transmitter can be mounted in any of four positions on the bracket. Tighten the cap screws slightly.
2. On the actuator, attach the coupler plate assembly (key 57) and travel indicator to the actuator shaft. This is accomplished by removing two self-tapping screws and travel indicator and replacing them with the self-tapping screws and coupler plate assembly furnished with the transmitter for the mounting application.
3. Install the mounting plate (key 21) on the actuator using the four cap screws and washers (keys 23 and 24). The transmitter and bracket can be mounted in any of four positions by using the cap screws (key 23) on the face of the actuator hub.
4. Tighten the cap screws (key 23) slightly while aligning the potentiometer shaft on the transmitter with the coupler plate assembly pin (key 57). When aligned, tighten the four cap screws (key 23). Maintain this alignment while tightening the two cap screws (key 32) holding the transmitter to the mounting plate (key 21).
5. Slide the coupler (key 52) over the potentiometer shaft and into the hole in the mounting plate (key 21). Slide the coupling (key 54) onto the plate assembly pin and attach the coupling to the plate assembly pin using the set screw.
6. Slide the coupler (key 52) into the coupling (key 54). The coupling should not be deflected in any direction when installed. Do not tighten the coupling set screw (key 53) as it will be tightened during the potentiometer alignment procedure.
7. Perform the electrical connections and potentiometer alignment procedures.

Long-Stroke Sliding-Stem Fisher 585C and 470-16 Actuator Mounting; 4220, 4221, and 4222 Transmitters

Use the following general procedures and figure 22 to mount the transmitter on long-stroke sliding-stem 585C and 470-16 actuators with 105 to 206 mm (4.125 to 8.125 inches) travel.

NOTICE

To avoid damaging the potentiometer after the transmitter is mounted, do not stroke the actuator without first loosening the socket screw set (key 100F) that fastens the coupling (key 100E) to the potentiometer shaft (key 5).

1. Stroke the actuator to mid-stroke.
2. Bolt the cable bracket (key 60) to the stem connector on the actuator stem. To do this, first replace the existing stem connector cap screws with studs (key 78). Slide the cable bracket (key 60) over the studs (key 78) before installing the nuts (key 71). Tighten the nuts (key 71).
3. If necessary, refer to the appropriate actuator instruction manual for the procedure to reconnect the actuator stem to the valve stem.
4. Attach the cable transducer housing (key 100A) to the mounting plate (key 63) using cap screws (key 103) and hex nuts (key 104).
5. Attach the mounting plate (key 63) to the actuator using hex head cap screws (key 32). Note: Some actuators may require spacers (key 101) between the mounting plate (key 63) and the actuator.

NOTICE

Free release of the cable (key 100B) will damage the transducer. Whenever the cable (key 100B) is extended, take steps to ensure that free release does not happen.

6. Carefully pull the cable (key 100B) down to the cable bracket (key 60) and attach it with the socket head cap screw (key 102), the lock washer (key 83) and the nut (key 72).
7. Remove the four cap screws (key 100D) and the mounting plate (key 100C) from the cable transducer.
8. Mount the mounting plate (key 100C) to the transmitter using cap screws (key 105).
9. Verify that the actuator is still in the mid-stroke position. Loosen the socket cap screws (key 100F) and rotate the coupling until the socket cap screws (key 100F) can be accessed with a hex wrench through one of the openings in the cable transducer housing (key 100A). Lock the coupling in place by tightening the inboard socket cap screw (key 100F).
10. Turn the potentiometer shaft (key 5) to the midpoint of its range.
11. Carefully install the transmitter to the cable transducer housing (key 100A) making sure that the potentiometer shaft (key 5) slides freely into the coupling (key 100E) and remains in the midpoint position. Reinstall the four cap screws (key 100D).
12. Lock the coupling (key 100E) to the potentiometer shaft (key 5) by tightening the outer socket cap screw (key 100F).
13. Install the cable cover assembly (key 64) on to the mounting plate (key 63) with the two machine screws (key 81). Attach the lower end of the cable cover assembly (key 64) to the actuator yoke with the cap screw (key 82). Note: Some actuators may require additional pieces to fully cover the yoke.
14. Perform the electrical connections.

Long-Stroke Sliding-Stem Fisher 585CLS and 490 Actuator Mounting; 4220, 4221, and 4222 Transmitters

Use the following general procedures and figure 23 to mount the transmitter on long-stroke sliding-stem 585CLS and 491 actuators with 229 to 610 mm (9 to 24 inches) travel.

NOTICE

To avoid damaging the potentiometer after the transmitter is mounted, do not stroke the actuator without first loosening the socket screw set (key 100F) that fastens the coupling (key 100E) to the potentiometer shaft (key 5).

1. Stroke the actuator to mid-stroke.
2. Bolt the cable clip (key 61) to the stem connector on the actuator stem. To do this, first replace the existing stem connector cap screws with a stud (key 35). Slide the cable clip (key 61) over the stud (key 35) before installing the nuts (key 73). Tighten the nuts.
3. If necessary, refer to the appropriate actuator instruction manual for the procedure to reconnect the actuator stem to the valve stem.
4. Attach the cable transducer housing (key 100A) to the mounting plate (key 63) using cap screws (key 103) and hex nuts (key 104).
5. Attach the mounting plate to the actuator using hex head cap screws (key 75). Note: Some actuators may require spacers (key 101) between the mounting plate (key 63) and the actuator.

NOTICE

Free release of the cable (key 100B) will damage the transducer. Whenever the cable (key 100B) is extended, take steps to ensure that free release does not happen.

6. Carefully pull the cable (key 100B) down to the cable clip (key 61) and attach it with the socket head cap screw (key 102), the lock washer (key 83) and the nut (key 72).
7. Remove the four cap screws (key 100D) and the mounting plate (key 100C) from the cable transducer.
8. Mount the mounting plate (key 100C) to the transmitter using cap screws (key 105).
9. Verify that the actuator is still in the mid-stroke position. Loosen the socket cap screws (key 100F) and rotate the coupling until the socket cap screws (key 100F) can be accessed with a hex wrench through one of the openings in the cable transducer housing (key 100A). Lock the coupling in place by tightening the inboard socket cap screw (key 100F).
10. Turn the potentiometer shaft (key 5) to the midpoint of its range.
11. Carefully install the transmitter to the cable transducer housing (key 100A) making sure that the potentiometer shaft (key 5) slides freely into the coupling (key 100E) and remains in the midpoint position. Reinstall the four cap screws (key 100D).
12. Lock the coupling (key 100E) to the potentiometer shaft (key 5) by tightening the outer socket cap screw (key 100F).
13. Install the lower yoke cover (key 69) on to actuator yoke with pan head machine screws (key 77) and washers (key 86).
14. Perform the electrical connections.

Electrical Connections

⚠ WARNING

Select wiring and/or cable glands that are rated for the environment of use (such as hazardous area, ingress protection and temperature). Failure to use properly rated wiring and/or cable glands can result in personal injury or property damage from fire or explosion.

Wiring connections must be in accordance with local, regional, and national codes for any given hazardous area approval. Failure to follow the local, regional, and national codes could result in personal injury or property damage from fire or explosion.

Note

For North American intrinsically safe installations, refer to the loop schematics included in the appropriate Hazardous Area Approval Supplement (CSA, D104308X012 or FM, D104309X012) or to instructions supplied by the barrier manufacturer for proper wiring and installation. For all other applications install the product per local, regional, or national code, rules, and regulations.

Conduit

Install conduit using local and national electrical codes which apply to the application.

Field Wiring

Figure 4 shows typical field wiring connections into the field wiring compartment. The transmitter is powered by 24 volts DC. Refer to table 1 to determine the power supply requirements. For units without position switches, the 24 volts DC can be provided by the receiving device or an external supply.

Figure 4. Wiring Connections

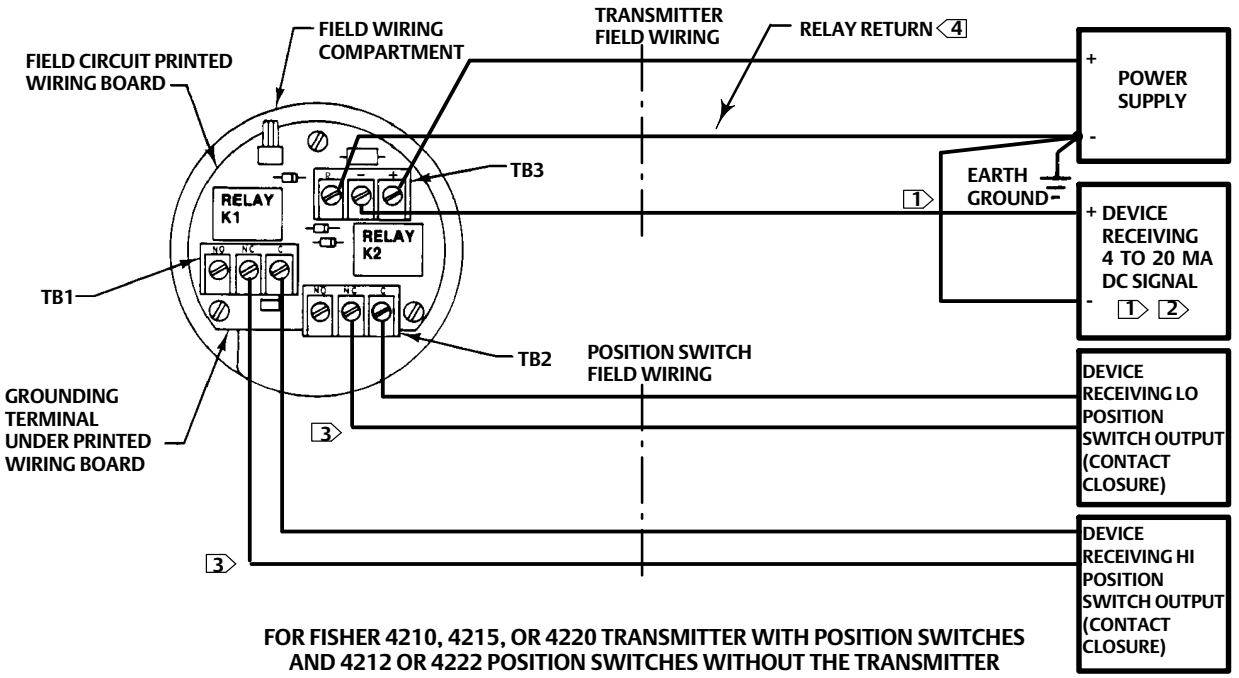

FOR FISHER 4210, 4215, OR 4220 TRANSMITTER WITH POSITION SWITCHES AND 4212 OR 4222 POSITION SWITCHES WITHOUT THE TRANSMITTER

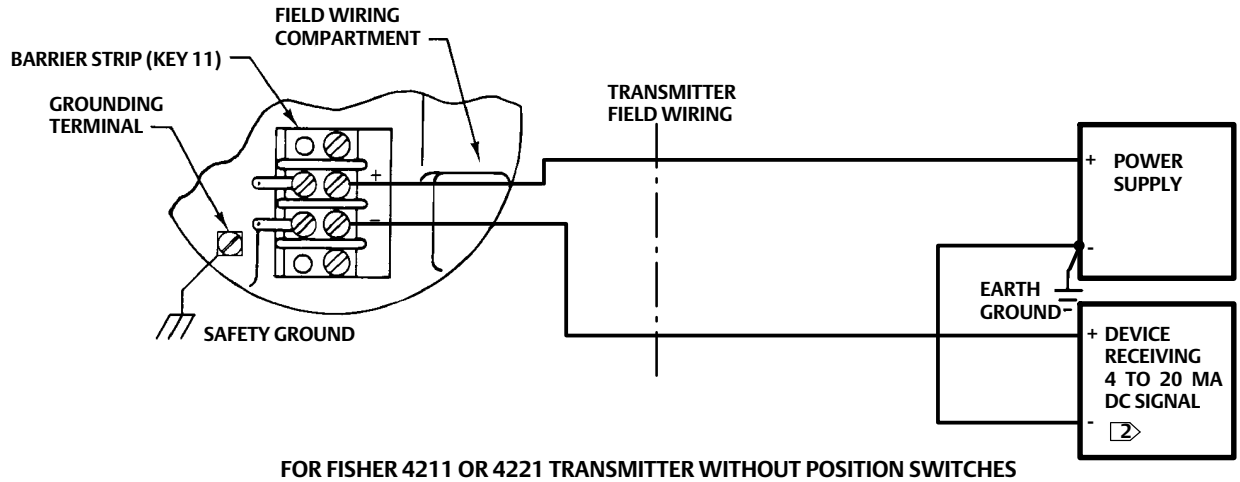

FOR FISHER 4211 OR 4221 TRANSMITTER WITHOUT POSITION SWITCHES

NOTES:

1 4212 AND 4222 POSITION SWITCHES WITHOUT THE TRANSMITTER CIRCUIT DO NOT REQUIRE A RECEIVING DEVICE OR THE ASSOCIATED WIRING.
2 RECEIVING DEVICE MAY BE ANALOG CURRENT INPUT TO DISTRIBUTED CONTROL SYSTEM, PROGRAMMABLE LOGIC CONTROLLER OR INDICATING DEVICE. INDICATING DEVICE CAN BE A VOLTMETER ACROSS A 250 OHM RESISTOR OR A CURRENT METER.
3 DURING NORMAL CONDITIONS, RELAYS K1 AND K2 ARE ENERGIZED, WHICH CONNECTS THE COMMON (C) TERMINAL TO THE NORMALLY OPEN (NO) TERMINAL. A TRIPPED (OR ALARM) CONDITION IS WITH THE RELAY(S) DE-ENERGIZED, WHICH CONNECTS THE COMMON (C) TERMINAL TO THE NORMALLY CLOSED (NC) TERMINAL.
4 SEPARATE RETURN REQUIRED FOR RELAYS. RETURN WIRE MUST BE CONNECTED EVEN IF RELAY OUTPUTS ARE NOT USED.

C0601-4

For units with position switches, the power supply provides 24 volt DC power to the position switch circuit in units without the transmitter, or to both the position switch circuits and transmitter in units with the transmitter. A 24 volt

DC power supply independent of the receiving device is recommended. A separate return is required for the relays. This prevents relay return currents from flowing in the transmitter 4 to 20 milliamperes DC current loop.

For the position switch relay wiring, during normal operating conditions relays K1 and K2 are energized, which connects the common (C) terminal to the normally open (NO) terminal (TB1 and TB2, figure 4). During a tripped (or alarm) condition the relay is de-energized, which connects the C terminal to the normally closed (NC) terminal. If power is removed or lost from the power supply both relays are de-energized which connects the common (C) terminals to the normally closed terminals (NC).

NOTICE

Connect the transmitter grounding terminal (key 58) to an earth ground. Improper grounding of the position transmitter can cause erratic operation.

Before making transmitter or position switch connections, ensure that the power supply is turned off. Refer to figure 4 for location of connections.

1. Remove the cover from the field wiring compartment. Note that you will need to loosen the set screw (key 106) before removing the cover.
2. Bring the transmitter field wiring and/or position switch wiring into the housing through one or both of the ports.
3. Field wiring connections:

Note

On transmitters with position switches, always make the connection between the power supply negative (-) terminal and the (R) terminal on TB3, even if the position switch outputs are not used.

   a. For a 4210, 4215, or 4220 transmitter with position switches, connect a wire from the (-) terminal of the power supply to the (R) terminal on TB3. Also connect a wire from the (-) terminal on the power supply to the negative (-) terminal of the receiving device. Connect a wire from the receiving device positive (+) terminal to the (-) terminal on TB3. Connect a wire from the (+) terminal on the power supply to the (+) terminal on TB3. Provide wiring for the position switch indicating device to match the application.

   b. For 4212 and 4222 position switches without a transmitter, connect a wire from the (+) terminal of the power supply to the (+) terminal on TB3. Connect a wire from the (-) terminal of the power supply to the (R) terminal on TB3. Provide wiring for the position switch indicating device to match the application.

   c. For a 4211 or 4221 transmitter without position switches. Connect a wire from the (+) terminal of the power supply to the (+) terminal on the barrier strip (key 11). Connect a wire from the (-) terminal of the power supply to the negative (-) terminal of the receiving device. Connect a wire from the receiving device positive (+) terminal to the (-) terminal on the barrier strip.

4. Connect the grounding terminal (key 58) to an earth ground.
5. For a 4210, 4212, 4215, 4220, or 4222 instrument with position switches, perform the following steps to connect the position switch wiring:

   a. Connect the high position switch field wiring from the high indicating device to TB1 on the field circuit printed wiring board.

   b. Connect the low position switch field wiring from the low indicating device to TB2 on the field circuit printed wiring board.

6. If only one output port is used, screw the pipe plug (supplied with the transmitter) into the unused port.
7. Perform the potentiometer alignment and direct/reverse action procedures for all applications.

Potentiometer Alignment

NOTICE

The following procedure must be performed prior to calibrating the transmitter or position switches. Failure to perform this procedure may result in erratic performance or unit failure.

This procedure adjusts the potentiometer to the center of its electrical travel when the control valve actuator or other device is at the center of its mechanical travel.

Refer to the Calibration section for the test equipment required in this section.

⚠ WARNING

Do not remove the covers on explosion-proof instruments when an explosive atmosphere is present. Personal injury or property damage may result from fire or explosion if covers are removed in an explosive atmosphere.

⚠ WARNING

When monitoring current during operation of an intrinsically safe instrument in an intrinsically safe area, a meter approved for hazardous areas must be used. Personal injury or property damage may result from fire or explosion if an approved meter is not used in a hazardous area.

Refer to figure 5 for component locations.

1. Remove power from the instrument.
2. Connect the digital voltmeter (DVM) leads as follows:
   a. For all transmitters (except a 4212 or 4222) connect between TP3 (+) and TP4 (-) on the printed wiring board.
   b. For a 4212 or 4222 transmitter, connect the DVM between TP5 (+) and TP6 (-).
3. Loosen the appropriate set screw connecting the potentiometer shaft to the linkage:
   a. For sliding-stem applications, loosen the set screw (key 26, figure 15) in the operating arm (key 30) on the potentiometer shaft.
   b. For rotary actuator applications, loosen the set screw in the coupling (key 50, figure 19) on the potentiometer shaft.
   c. For long-stroke applications, leave the coupler (key 100E) rigidly attached to the potentiometer shaft. Loosen only the coupling screw (key 100F, figures 22 and 23) in the coupler (key 100E) on the transducer shaft.
4. Stroke the actuator or other device to the mid-stroke position.

Note
On units with position switches, the (R) terminal on TB3 must be connected to the power supply negative (-) terminal as shown in figure 9 to attain correct potentiometer alignment.

Figure 5. Transmitter Printed Wiring Board Assembly

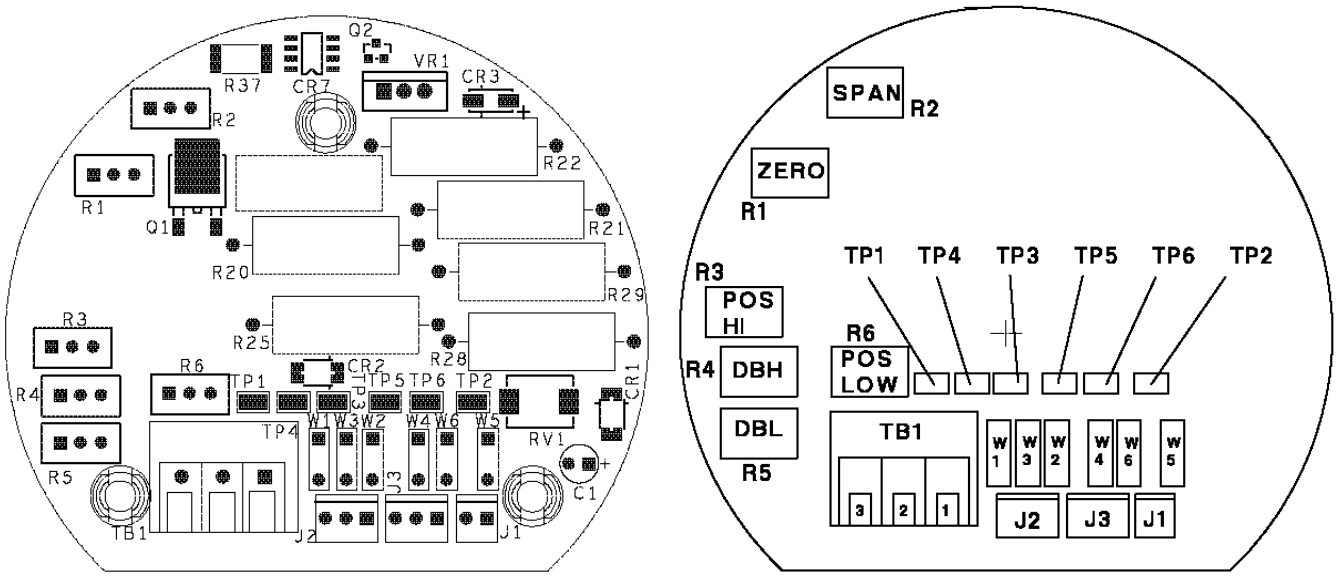

TOP COMPONENT SIDE (VIEWED FROM TOP SIDE) **IDENTIFICATION LABEL**

5. Apply power to the instrument.
6. While the device is in mid-stroke position, insert a screwdriver blade into the slot in the end of the potentiometer shaft (see figure 15), or turn the coupler (key 52, figure 19 or key 100E, figures 22 and 23) to turn the potentiometer shaft until the DVM reads 1.25 ±0.05 volts DC. This establishes the electrical center of the potentiometer.
7. Tighten the appropriate set screw. Check that the DVM reading has remained at 1.25 ±0.05 volts DC.

Note

For sliding-stem applications, tighten the set screw (key 26, figure 15) in the operating arm (key 30) to a torque of 3.39 to 3.95 N•m (30 to 35 lbf•in).

8. Remove the power from the transmitter power supply.
9. Remove the DVM leads from TP3 and TP4 (transmitter signal) or TP5 and TP6 (position switch signal).
10. Refer to the direct or reverse action procedures.

Direct or Reverse Action

Direct action means, when looking at the slotted end of the potentiometer shaft, a clockwise rotation of the shaft produces an increasing output signal from the transmitter.

Reverse action means, when looking at the slotted end of the potentiometer shaft, a clockwise rotation of the shaft produces a decreasing output signal from the transmitter.

The transmitter produces a direct or reverse action output signal depending on the location of the potentiometer wires inserted in terminal block number 1 (TB1) mounted on the transmitter printed wiring board. Refer to figure 6 for the location of the wires and the wire color sequence for direct action.

For reverse action, exchange the positions of the brown and red wires.

Arrange wires on the terminal block (TB1) for either direct or reverse action to match the application requirements; then repeat the potentiometer alignment procedures.

Refer to the Calibration section to adjust the zero and span of the transmitter and/or position switch circuits.

Operating Information

Initial Considerations

If the transmitter is ordered with an actuator, the transmitter is factory calibrated to the length of travel specified on the order. If the transmitter is ordered separately, adjust the zero and span as described in the Calibration section so that the transmitter operates properly in your specific application.

If the transmitter is calibrated for a specific control valve actuator travel, perform the procedures in the Calibration section to fine tune the zero and span adjustments to the specific application.

Transmitter and Position Switch Conditions

- A 4210 or 4220 transmitter (with position switches) obtains stem position from the input potentiometer and circuit electronics to provide a 4 to 20 milliampere output. The transmitter output connects to a terminal block mounted in the field wiring compartment. The high position switch circuit output controls relay K1 mounted on the field circuit printed wiring board, and the relay contacts connect to TB1. The low position switch circuit output controls relay K2, and the relay contacts connect to TB2. The relationship between the transmitter output, relay position switch outputs, and deadband is shown in figure 7. Deadband is the difference between trip and reset points of a relay.

- A 4211 or 4221 transmitter (without position switches) obtains input information from the potentiometer and provides a 4 to 20 milliampere output. The transmitter output connects to the barrier strip (key 11, figure 4) mounted in the field wiring compartment.

- A 4212 or 4222 position switch (without the transmitter) obtains stem position from the input potentiometer and provides position switch outputs from relays K1 and K2 (figures 4 and 9). The high position switch circuit output controls relay K1 mounted on the field circuit printed wiring board and, the relay contacts connect to TB1. The low position switch circuit output controls relay K2 and, the relay contacts connect to TB2. Deadband is the difference between trip and reset points of a relay.

- A 4215 transmitter obtains position information from a dual potentiometer on the same shaft, which allows for individual potentiometers for the transmitter circuit and the position switch circuits. The transmitter input is from one of the potentiometers and its output connects to TB3 (figure 6) mounted on the field circuit printed wiring board. The position switch input is obtained from the other potentiometer.

The high position switch circuit output controls relay K1 mounted on the field circuit printed wiring board and the relay contacts connect to TB1. The low position switch circuit output controls relay K2 and the relay contacts connect to TB2. The relationship between the transmitter output, relay position switch outputs, and deadband is shown in figure 7. Deadband is the difference between the trip and reset points of a relay.

Figure 6. Instrument Assembly Details

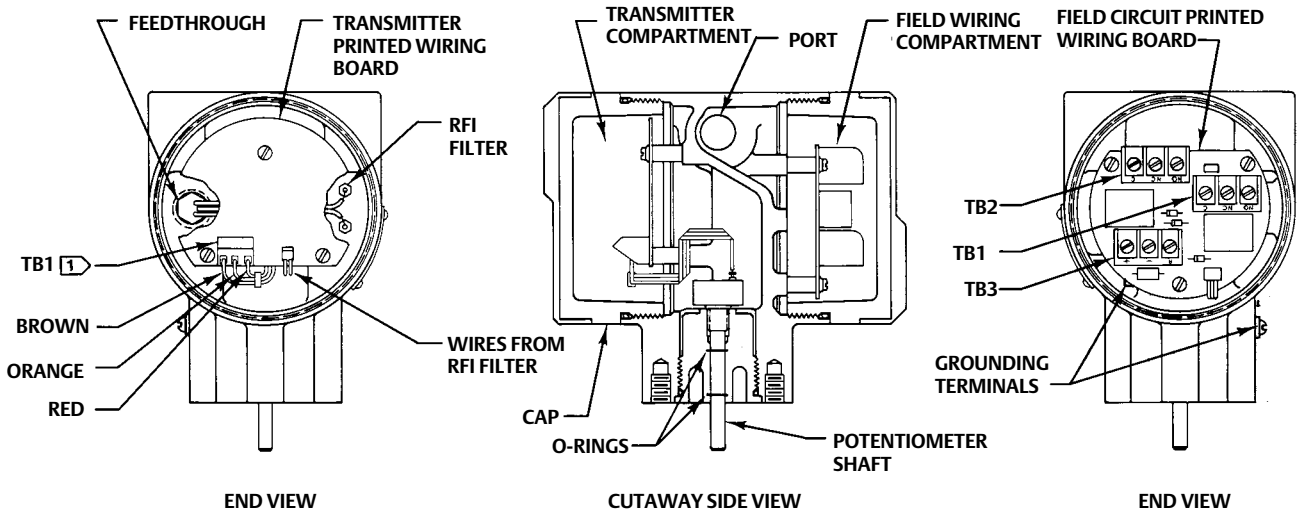

NOTE:
1 WIRES CONNECTED TO TB1 ARE SHOWN IN THE COLOR SEQUENCE FOR DIRECT ACTION.
FOR REVERSE ACTION, THE COLOR SEQUENCE IS RED, ORANGE, AND BROWN (FROM LEFT TO RIGHT).

C0602-4

Normal Operation

⚠ WARNING

Do not remove the covers on explosion-proof instruments when an explosive atmosphere is present. Personal injury or property damage may result from fire or explosion if covers are removed in an explosive atmosphere.

Once the instrument has been calibrated and placed in operation, further adjustments should not be necessary. The 4 to 20 milliampere output can be monitored during operation (in a non-hazardous environment) by removing the cover and connecting a milliammeter between TP1 (+) and TP2 (-) on the printed wiring board (figure 5) on 4210,

4211, 4215, 4220, or 4221 transmitter. On 4212 or 4222 connect a voltmeter between TP5 (+) and TP6 (-) to measure potentiometer position.

Note

You will need to loosen the set screw (key 106) before removing the cover.

For position switch circuits, the switching condition can be monitored by observing the indicating device or using an ohmmeter connected to the terminal blocks (TB1 and TB2) in the field wiring compartment. Refer to the Calibration section for the test setup.

Calibration

Note

The potentiometer alignment procedures, in the Installation section, must be completed before performing instrument calibration. Also, be sure the direct or reverse action is correct for the application.

Calibration of the instrument consists of adjusting the zero and span of the transmitter and/or adjusting the high and low position switches for a specific travel. The high and low position switches also have deadband adjustments that are made during the calibration procedures. Refer to figure 7 for transmitter and position switch conditions.

For a 4212 or 4222 instrument with position switch circuits only, refer to the high and low position switch adjustment procedures in this section. For a transmitter with or without position switch circuits, refer to the transmitter circuit zero and span adjustment procedures in this section.

If satisfactory results cannot be obtained during calibration, refer to the appropriate procedures in the Maintenance section.

Figure 7. Transmitter and Position Switch Conditions (also see table 5)

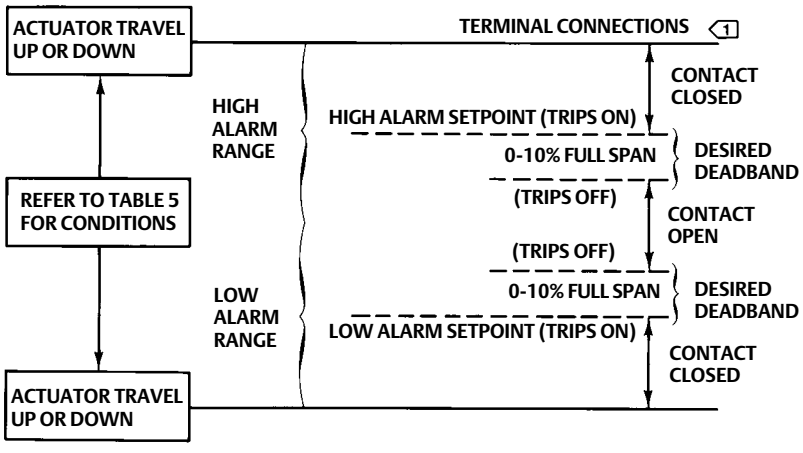

NOTE:
1 WHEN USING THE COMMON (C) AND THE NORMALLY CLOSED (NC) TERMINAL CONNECTIONS, THE CONTACTS WILL BE CLOSED WHEN THE RELAY COIL IS DE-ENERGIZED.

A3787

Table 5. Transmitter and Position Switch Conditions (also see figure 7)

FOR ROTARY ACTUATORS						
Type	**Transmitter Action**	**Actuator Style**	**Actuator Stem Travel**	**Input Potentiometer Rotation(1)**	**Transmitter Current Output, Milliampere**	**Set Position Switch**
4210	Direct	A,D	Down	CW	20	Hi
			Up	CCW	4	Lo
		B,C	Up	CW	20	Hi
			Down	CCW	4	Lo
	Reverse	A,D	Up	CCW	20	Hi
			Down	CW	4	Lo
		B,C	Down	CCW	20	Hi
			Up	CW	4	Lo
4212	Direct	A,D	Down	CW	N/A	Hi
			Up	CCW		Lo
		B,C	Up	CW		Hi
			Down	CCW		Lo
	Reverse	Not available for position switches without transmitter				
4215	Direct	A,D	Down	CW	20	Hi
			Up	CCW	4	Lo
		B,C	Up	CW	20	Hi
			Down	CCW	4	Lo
	Reverse	A,D	Down	CW	4	Hi
			Up	CCW	20	Lo
		B,C	Up	CW	4	Hi
			Down	CCW	20	Lo
4211	Not required for transmitter without position switches					
FOR SLIDING-STEM ACTUATORS						
4210 4220	Direct	---	Down	CW	20	Hi
			Up	CCW	4	Lo
	Reverse	---	Up	CCW	20	Hi
			Down	CW	4	Lo
4212 4222	Direct	---	Down	CW	N/A	Hi
			Up	CCW	N/A	Lo
	Reverse	Not available for position switches without transmitter				
4215	Direct	---	Down	CW	20	Hi
			Up	CCW	4	Lo
	Reverse	---	Down	CW	20	Hi
			Up	CCW	4	Lo
4211,4221	Not required for transmitter without position switches					

1. Viewed from the potentiometer shaft end.

Test Equipment Required

The following test equipment is used in the calibration and maintenance of the instrument:

- Digital voltmeter (DVM) that measures voltages in the range of 0 to 30 volts DC with an accuracy of ±0.25 percent.
- Power supply capable of supplying 20 to 30 volts DC at 100 mA.
- Resistor, 250 ohms, 0.1%, 0.5 watt or greater.

Test Connections to the Field Wiring Compartment

During calibration set up the transmitter as shown in figure 8. Except for 4211 and 4221 transmitters, the field circuit printed wiring board is used. A 4211 or 4221 transmitter uses a barrier strip (key 11, figure 4) mounted in the field wiring compartment for field wiring connections. For calibration and bench check of the 4211 or 4221 transmitter, make connections to the barrier strip (key 11).

For a 4210, 4215, or 4220 transmitter with position switches, the transmitter can be calibrated with or without the position switch outputs being connected.

Note

On units with position switches, the (R) terminal on TB3 must be connected to the power supply negative (-) terminal for proper instrument operation, even if the position switch outputs are not used.

For a 4211 or 4221 transmitter without position switches, use a two wire system with the indicating device installed as shown in figure 8.

Figure 8. Calibration and Bench Check Test Setup

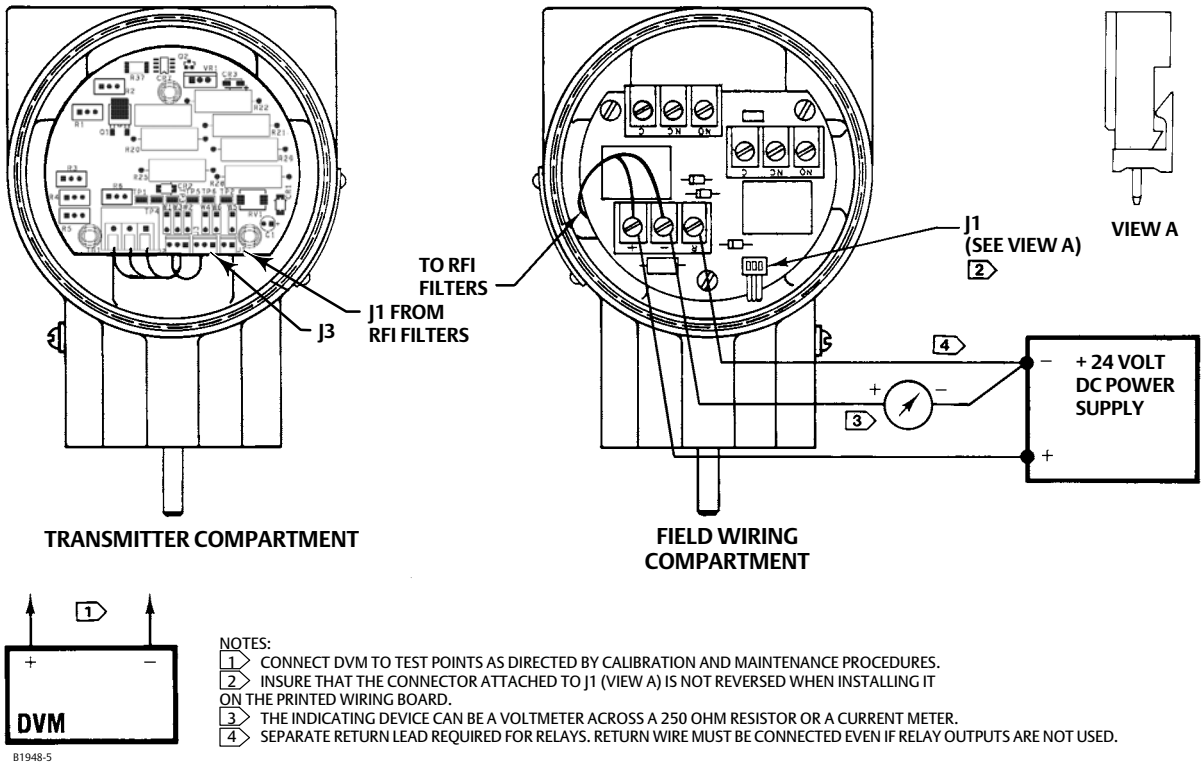

NOTES:
1 CONNECT DVM TO TEST POINTS AS DIRECTED BY CALIBRATION AND MAINTENANCE PROCEDURES.
2 INSURE THAT THE CONNECTOR ATTACHED TO J1 (VIEW A) IS NOT REVERSED WHEN INSTALLING IT ON THE PRINTED WIRING BOARD.
3 THE INDICATING DEVICE CAN BE A VOLTMETER ACROSS A 250 OHM RESISTOR OR A CURRENT METER.
4 SEPARATE RETURN LEAD REQUIRED FOR RELAYS. RETURN WIRE MUST BE CONNECTED EVEN IF RELAY OUTPUTS ARE NOT USED.

Transmitter Circuit Zero and Span Adjustment

⚠ WARNING

On an intrinsically safe instrument, the current monitoring across TP1 and TP2 during operation must be with an approved meter. Personal injury or property damage may result from fire or explosion if an approved meter is not used in a hazardous area.

Calibration of the transmitter consists of adjusting the zero and span for a 1 to 5 volt DC output across a 250 ohm resistor, or a 4 to 20 mA output current for a specific travel. If necessary refer to the type number on the nameplate to determine the configuration of the transmitter.

1. Remove power from the instrument.
2. Connect the transmitter as shown in figure 8.
3. Remove the transmitter covers. Note that you will need to loosen the set screws (key 106) before removing the covers.
4. Stroke the valve or device to the mid-stroke position
5. Check the potentiometer alignment by connecting a digital voltmeter (DVM) as follows:
   a. For all transmitters (except a 4212 or 4222) connect between TP3 (+) and TP4 (-) on the printed wiring board.
   b. For a 4212 or 4222 transmitter, connect the DVM between TP5 (+) and TP6 (-).
6. Apply power to the instrument.
7. The DVM should read 1.25 ±0.05 volts DC. If not, perform the potentiometer alignment procedures in the Installation section.
8. Stroke the valve or device to the point of travel where the transmitter output is to be 4 milliamperes DC.
9. Adjust the zero potentiometer (R1, figure 5) until the output is 4 milliamperes DC (1.00 volt across 250 ohms).
10. Stroke the valve or device to the point of travel where the transmitter output is to be 20 milliamperes DC.
11. Adjust the span potentiometer (R2, figure 5) until the output is 20 milliamperes DC (5.00 volts across 250 ohms).
12. Some small interaction between the two adjustments may occur. Repeat steps 8 through 11 until the error is within the application requirements.
13. For a 4211 or 4221 transmitter without position switches, calibration is complete. Refer to the installation and/or operating information to place the transmitter in service.
14. If calibration is complete, replace the transmitter covers. Be sure to tighten the set screws (key 106) securely after installing the covers. For transmitters with position switches, refer to the high and low position switch adjustment procedure below.

High and Low Position Switch Adjustment

Note

The “high” and “low” designations refer to the voltage output of the position potentiometer. See figure 7 for relationship to valve or actuator travel.

The high position switch must be adjusted before the low position switch. If the deadband of either the high or low position switches exceeds the difference between the set points of the high and low position switches, both position switches may be on at the same time.

The following procedure sets the high and low position switches, and the deadband for each of them. The high position switch must be adjusted before the low position switch. Use an ohmmeter connected between the normally closed (NC) and common (C) connections on terminal block TB1 (high switch) or TB2 (low switch) to observe relay switching action as directed by the procedures.

The potentiometer alignment procedures must be performed before calibrating the position switch circuits. For transmitter and position switch switch conditions, refer to figure 7 while performing the following calibration:

1. If necessary, perform the potentiometer alignment procedure.
2. Remove power from the instrument.
3. Remove the transmitter covers. Note that you will need to loosen the set screws (key 106) before removing the covers.
4. To provide an indication of switch conditions, remove power from the instrument. Disconnect the position switch field wiring from TB1 and TB2, and connect an ohmmeter to TB1 between the (NC) and (C) terminals (figure 4).

Turn both the high and low deadband potentiometers (DBH, R4, and DBL, R5) fully counterclockwise to set the deadbands to minimum and set the low position switch potentiometer (LOW, R6) fully counterclockwise.

Note

The potentiometers are 25 turn trimpots with a slip clutch. To set these potentiometers at their maximum counterclockwise position, turn them 25 or more turns in the counterclockwise direction.

Setting the High Position Switch

For 4210, 4220, 4212, 4222, and 4215 direct acting transmitters, refer to figure 5 for location of adjustments.

1. Turn the high position switch potentiometer (HIGH, R3) fully clockwise.
2. Stroke the valve or device to the point of travel where the high position switch is to operate (see figure 7).
3. Apply power to the instrument.
4. Turn the high position switch potentiometer (R3) slowly counterclockwise until the high position switch trips, the ohmmeter changes from a high resistance to a low resistance reading.
5. The high position switch is now set.

Setting the High Position Switch Deadband

1. Slowly stroke the actuator or device between the tripped and reset point of the high position switch. Observe this by the changing readings of the ohmmeter. Note the differences in travel between the trip point and reset points. This is the deadband of the switch.
2. If necessary, increase the deadband by turning the potentiometer (DBH, R4), clockwise.
3. Repeat steps 1 and 2 until the desired deadband setting is obtained.

Setting the Low Position Switch

Note

Perform the high position switch adjustment procedures before adjusting the low position switch.

1. To provide an indication of switch condition, remove power from the instrument. Connect an ohmmeter to TB2 between the (NC) and (C) terminals (figure 4).
2. Stroke the device to the point of travel where the low position switch is to operate (See figure 7).
3. Apply power to the instrument.
4. Ensure that the low position switch potentiometer (LOW, R6, figure 5) is fully counterclockwise as previously instructed.
5. Turn the low position switch potentiometer (R6) slowly clockwise until the low position switch trips, the ohmmeter changes from a high to a low resistance reading.
6. The low position switch is now set.

Setting the Low Position Switch Deadband

1. Slowly stroke the actuator or device between the tripped and reset point of the low position switch. Observe this by the changing readings on the ohmmeter. Note the differences in travel between the trip point and reset points. This is the deadband of the low position switch.
2. If necessary, increase the deadband, by turning potentiometer (DBL, R5, figure 5) clockwise.
3. Repeat steps 1 and 2 until the desired deadband setting is obtained.
4. If adjustments are complete, remove power from the instrument and disconnect the ohmmeter.
5. Perform the installation and/or operating procedures to place the transmitter in service and replace the transmitter covers. Be sure to tighten the set screws (key 106) securely after installing the covers.

Position Switch Circuit Shutoff

Refer to figure 5 for location of adjustments.

Certain conditions may require the position switch circuit capabilities to be shut off. To shut off the position switches, turn the high position switch potentiometer (HIGH, R3) fully clockwise, and turn the low position switch potentiometer (LOW, R6) fully counterclockwise. To restore the position switch circuits to operation, follow the high and low position switch adjustment procedures described in this section.

Note

Both position switch relays are energized in this condition. The trip points cannot be adjusted to prevent the relays from energizing.

Principle of Operation

The basic concept of the electronic position transmitter can be understood by visualizing the entire transmitter as a variable resistor in series with a load and connected to a power supply as shown in figure 9. A linkage or travel transducer assembly transmits linear motion of the device into rotary motion of the potentiometer. The potentiometer is connected to the input of the transmitter circuit. The voltage present at the wiper of the potentiometer supplies input voltage to the electronic circuitry in the transmitter to produce a current output.

Figure 9. Transmitter Operation

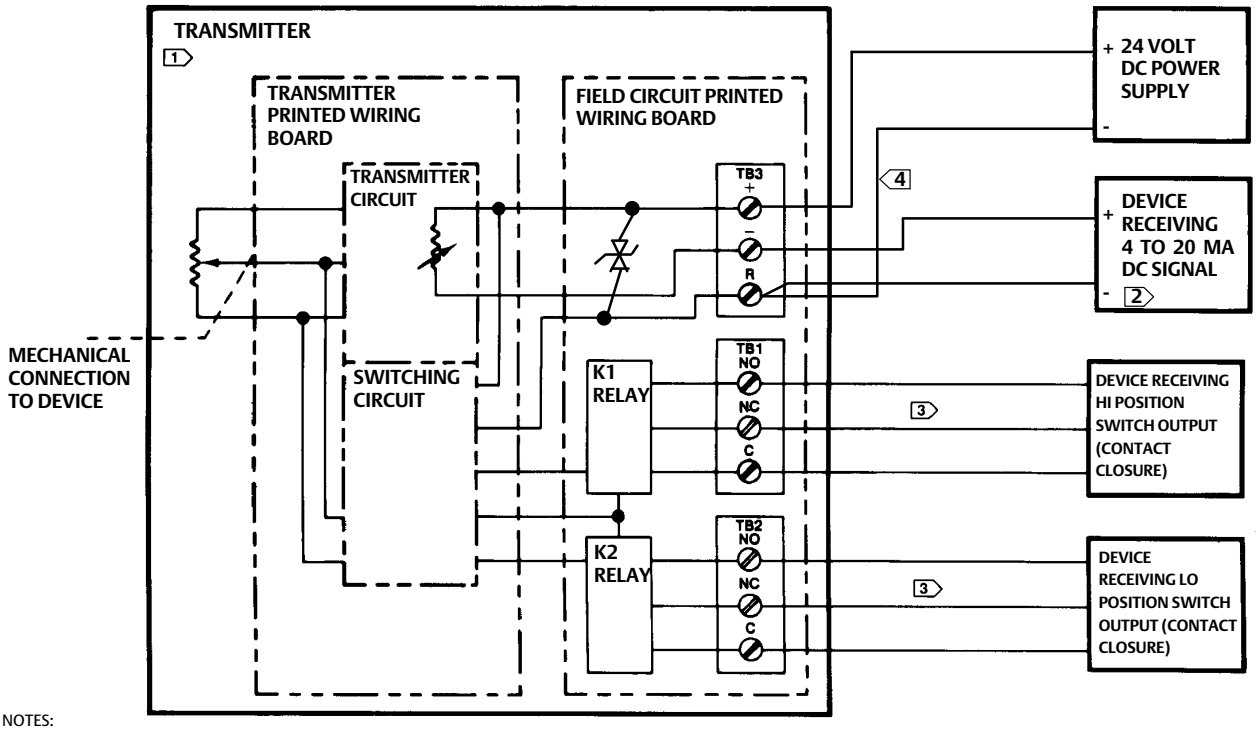

NOTES:
1 THIS EQUIVALENT CIRCUIT IS TYPICAL FOR ALL TYPES OF TRANSMITTERS. GENERALLY, IF A PORTION OF THE CIRCUIT IS NOT USED, IT IS OMITTED.
2 RECEIVING DEVICE MAY BE ANALOG CURRENT INPUT TO DISTRIBUTED CONTROL SYSTEM, PROGRAMMABLE LOGIC CONTROLLER OR INDICATING DEVICE. INDICATING DEVICE CAN BE A VOLTMETER ACROSS 250 OHM RESISTOR OR A CURRENT METER.
3 FIELD WIRING FOR POSITION SWITCHING CIRCUITS CAN BE A TWO OR THREE WIRE SYSTEM DEPENDING ON THE APPLICATION REQUIREMENTS.
4 SEPARATE RETURN REQUIRED FOR RELAYS. RETURN WIRE MUST BE CONNECTED EVEN IF RELAY OUTPUTS ARE NOT USED.

B1946-4

The position switch circuit is driven by the same input system as the transmitter (except for the 4215 transmitter). The position switch circuit acts as an electronic switch that controls two relays. The voltage present at the wiper of the potentiometer is compared to the settings of the high and low position switch set points and provides an on or off condition for the relays. Instruments that use a single element potentiometer use the same element for both the transmitter input and the input to the position switch circuits. A 4215 transmitter with dual element potentiometers uses one element of the potentiometer for the transmitter input and the other element for the position switch circuit input. On an instrument with position switches only, the single element potentiometer is used for the position switch circuit input. Each of the position switch circuit outputs is connected to a relay on the field circuit printed wiring board, and depending on the potentiometer position, the relays are energized or de-energized.

Transmitter Circuit

At all times, the current flow into the transmitter equals the current flow out of the transmitter. The current flowing into the transmitter divides between a regulator circuit and transistor Q1.The regulator circuit establishes two voltages one of which is (VREF). This voltage is applied across the input potentiometer. The other voltage, (VREG) powers the Op Amps.

On units with position switches, the transmitter voltage regulator, 4 to 20 mA signal, and relay coil currents flow in the wire between the power supply (+) terminal and the (+) terminal on TB3. The transmitter voltage regulator, switching, and relay coil currents are returned to the power supply common from the (R) terminal on TB3. The 4 to 20 mA output signal flows between the (-) terminal on TB3 and the power supply common. This prevents the relay coil switching currents from appearing on the 4 to 20 mA output.

Position Switch Circuit

A regulated voltage is setup to power the position switch circuit. The position switch circuit senses the position of the potentiometer and triggers the appropriate position switch relay (K1 or K2, figure 10) when travel reaches the trip points established by the adjustments. The 4215 transmitter uses dual potentiometers which allows individual potentiometers for the transmitter circuit and the position switch circuit.

Figure 10. Schematic Diagram for the Field Printed Wiring Board

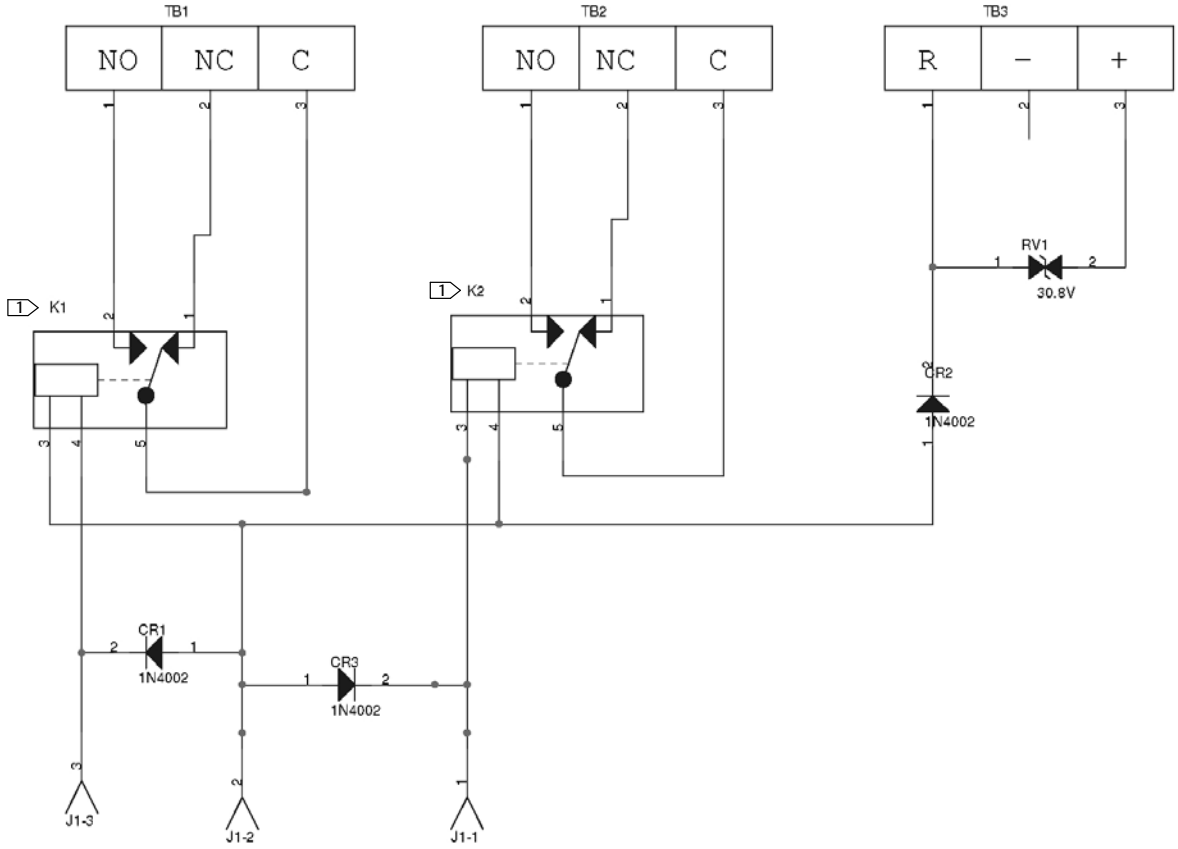

NOTE:
1 RELAYS K1 AND K2 ARE SHOWN IN THE DE-ENERGIZED POSITION (TRIPPED POSITION).
29A6206-D

Maintenance

⚠ WARNING

To avoid personal injury or property damage from the sudden release of pressure:

- **Always wear protective clothing and eyewear when performing any maintenance operations.**
- **Do not remove the actuator from the valve while the valve is still pressurized.**
- **Disconnect any operating lines providing air pressure, electric power, or a control signal to the actuator. Be sure the actuator cannot suddenly open or close the valve.**
- **Use bypass valves or completely shut off the process to isolate the valve from process pressure. Relieve process pressure on both sides of the valve.**
- **Use lock-out procedures to be sure that the above measures stay in effect while you work on the equipment.**
- **Check with your process or safety engineer for any additional measures that must be taken to protect against process media.**

⚠ WARNING

Do not remove the covers on explosion-proof instruments when an explosive atmosphere is present. Personal injury or property damage may result from fire or explosion if covers are removed in an explosive atmosphere.

Test equipment for the following procedure is listed in the Calibration section. Voltage references in this procedure may vary depending on the temperature of the instrument. The voltages below are taken at approximately 22°C (72°F) ambient temperature.

NOTICE

Electrostatic voltages present in the environment may be transferred to the transmitter printed wiring board which may cause failure or degraded performance. Use appropriate antistatic procedures when working with the printed wiring board to protect the electronic circuits.

The following procedures consider the instrument assembled with all components installed according to the type number description. The following procedures can be used in the field or for a bench check. Connect the instrument as shown in figure 8 for bench check.

Troubleshooting Procedures

Transmitter Circuit

Note

On transmitters with position switches, the (R) terminal on the field circuit printed wiring board must be connected to the power supply negative (-) terminal for proper transmitter operation, even though the position switch outputs are not used.

1. Verify that the instrument is receiving power, and verify that the receiving device(s) are operating correctly.
2. If the transmitter is the problem, maintenance can be performed by either sending the entire instrument to the factory for repair, by replacing the printed wiring board(s), or by replacing the pot/bushing assembly (key 3, figures 11 and 14) depending on which is defective.
3. Troubleshoot the transmitter circuit by measuring the voltages.
4. Location of test voltage designated by V1 (table 6) is shown on the printed wiring board assembly (figure 12).

Table 6. Test Procedure (also refer to figure 12)

STEP	CONNECT DVM TO		DVM READS
	(+) Lead	(-) Lead	
1	V1	TP4	2.46 to 2.54 VDC (VREF)
2	V2	TP6	14.1 to 16.1 VDC (+15)
3	V3	TP6	2.46 to 2.54 VDC (VREF2)

5. Check the voltage at V1 as described in table 6.
6. If the voltage is not present, field repair of the instrument is not recommended. Either replace the printed wiring board or return the instrument to the factory for repair.
7. If this voltage is present, the potentiometer may be the source of trouble.
8. Check the voltage between TP3 (+) and TP4 (-) as the position of the potentiometer is varied. For 4212 and 4222 transmitters, check the voltage between TP5 and TP6 as the position of the potentiometer is varied.

   a. If the voltage does not vary with position, perform the potentiometer alignment. If the problem remains, replace the pot/bushing assembly (key 3, figure 11 or 14).

   b. If the potentiometer wiper voltage checks good, but the transmitter output is constant or non-linear, the problem may be due to improper potentiometer alignment. Perform the potentiometer alignment procedures; then repeat step 8 above.

   c. If the potentiometer voltage is present but the transmitter output current does not change linearly as the position of the potentiometer changes, replace the transmitter printed wiring board, or return the transmitter to the factory for repair.

Position Switch Circuit

1. Ensure that the position switch circuit is connected correctly, and that the terminal marked (R) on the field circuit printed wiring board is returned to the negative terminal of the supply. Refer to figure 4 for wiring connections.
2. Ensure that the power supply voltage is between 20 and 30 volts DC.

3. Check voltages V2 and V3 as described in table 6:

   a. If either or both of the voltages are not present, field repair of the instrument is not recommended. Return the instrument to the factory for repair.

   b. If V2 and V3 are correct, continue with the following steps:

4. Perform the high and low position switch calibration procedures in the Calibration section.
5. If the position switches cannot be set, replace the field circuit printed wiring board (figure 11) or return the instrument to the factory for repair.

Printed Wiring Board Removal and Replacement

⚠ WARNING

Refer to the Maintenance WARNING at the beginning of this section.

NOTICE

Electrostatic voltages present in the environment may be transferred to the transmitter printed wiring board which may cause failure or degraded performance. Use appropriate antistatic procedures when working with the printed wiring board to protect the electronic circuits.

Figure 11. Housing Assembly for Fisher 4210, 4215, or 4220 Transmitter with Position Switches and 4212 or 4222 Position Switches without Transmitter

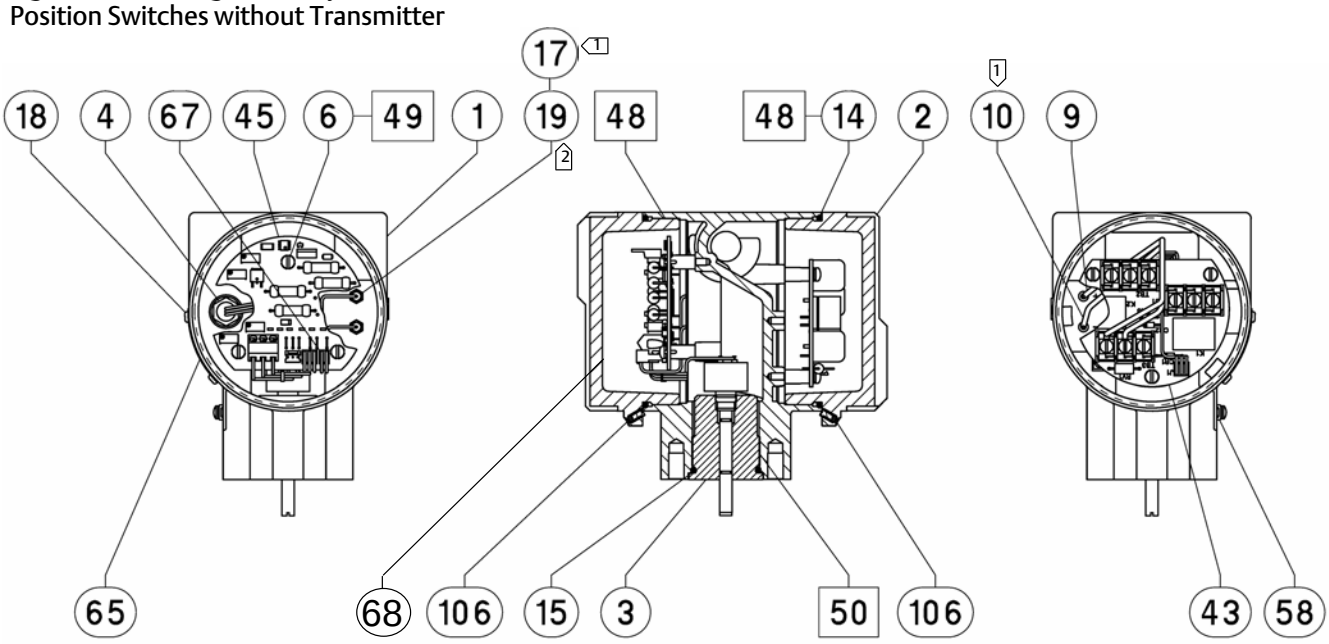

□ APPLY LUBRICANT OR SEALANT
NOTES:
1 KEY 17 IS LOCATED BETWEEN THE TERMINAL POST BASE AND THE DEVICE HOUSING.
2 ON 4212, 4222, USE KEY 35 INSTEAD OF KEY 17/19 AT THE "-"FEEDTHROUGH POSITION, OMIT KEY 10.

49A7893 P

Transmitter Printed Wiring Board

Refer to figure 12 for component locations.

Figure 12. Transmitter Printed Wiring Board

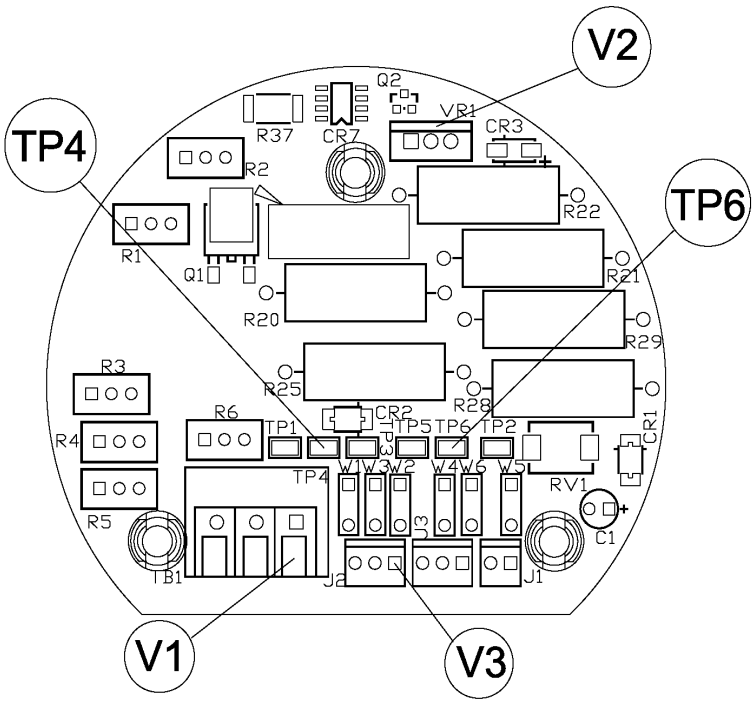

Removal:

1. Remove power from the transmitter.
2. With the transmitter compartment covers removed, disconnect the connectors from J1, J2, and J3 if they are used. Note that you will need to loosen the set screws (key 106) before removing the covers.
3. Note the locations of the wires, then disconnect the wires from TB1.
4. Remove the three screws that hold the board in place.
5. Grasp one of the components that protrudes from the board, and gently lift the board from the transmitter compartment.
6. Place the board on an anti-static surface for repair or replacement.

Replacement:

Note

When replacing connectors J1, J2, and J3 do not reverse the connector. The connector can be forced on in the opposite direction. Reversing any connector can cause incorrect operation of the transmitter. Refer to figure 8, view A, for proper insertion of the connectors.

1. Check the printed wiring board for correct jumper configuration. Refer to table 7.

Table 7. Jumper Configuration

Type	Circuit	PWB Assembly	Jumpers Installed
4211/4221	Transmitter Only	GE15866X012	W4, W5 (C1 Removed)
4210/4220	Transmitter with Alarms	GE15866X022	W1, W2, W4, W5, W6
4212/4222	Alarm Switches Only	GE15866X032	W3, W6
4215	Transmitter w/Alarms - Dual Pot	GE15866X042	W3, W4, W5, W6

* See figure 5 for jumper locations on the printed wiring board.
NOTES:
1. The three wire cable assembly connected to J3 provides the position switch circuit output to relays K1 and K2 on the field circuit printed wiring board.
2. Terminal block number 1 (TB1) provides the connections for the three wire cable assembly from the potentiometer. On a dual potentiometer system, it provides the transmitter input only.
3. Connector J2 is only used with a dual potentiometer or for position switches without transmitter circuit. It provides the position switch circuit input to the printed wiring board.
4. The two wire cable assembly connected to J1 is used for the transmitter output signal, (4 to 20 milliamperes), and is connected to the RFI filter.

2. When the replacement board is ready, lower the board into the transmitter compartment.
3. Insert and tighten the three screws.
4. Install the plug connections that were removed.
5. Connect the red and black wires to the printed wiring board according to the transmitter type.
6. Perform the potentiometer alignment and calibration procedures.

Field Circuit Printed Wiring Board

Refer to figure 13 for component locations.

Figure 13. Field Circuit Printed Wiring Board

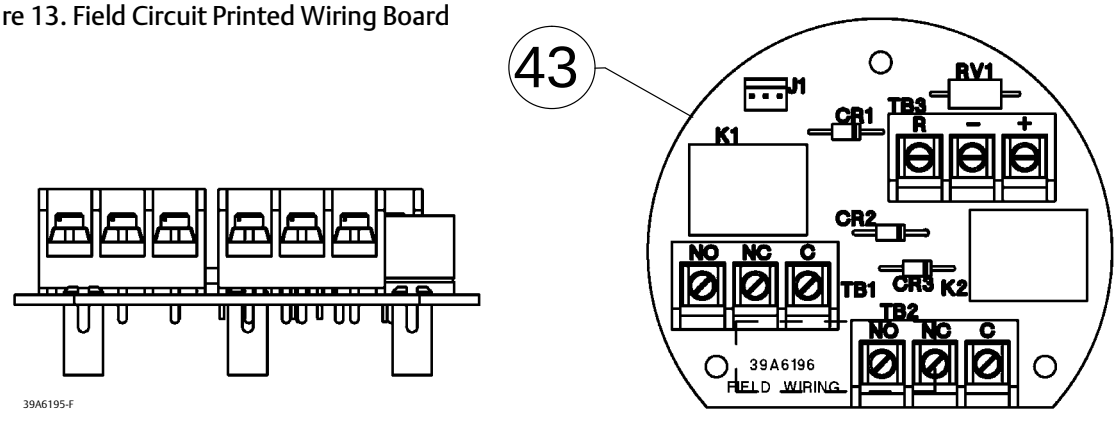

Removal:

1. Note the locations of the field wires then disconnect the wires from TB1, TB2, and TB3 (if they are all used).

2. Remove the three screws that hold the board in place.
3. Grasp one of the components that protrudes from the board and gently lift the board from the field wiring compartment.
4. Place the board on an anti-static surface for repair or replacement.

Replacement:

1. When the replacement board is ready, lower the board into the transmitter compartment.
2. Insert and tighten the three screws and, install the wiring connections that were removed.
3. The red and black power wires must be connected to TB3 according to the transmitter type.

Pot/Bushing Assembly Replacement

NOTICE

Remove the wiring assembly or assemblies connected between the potentiometer and the transmitter printed wiring board before removing the pot/bushing assembly (key 3) from the transmitter housing (key 1). Failure to disconnect the wiring assembly(ies) may result in damage to the wiring.

1. Remove power from the instrument.
2. Remove the covers (key 2, figure 11 or 14) from the transmitter housing. Note that you will need to loosen the set screws (key 106) before removing the covers.
3. Note the location of the field wiring, and disconnect the wiring from the field circuit printed wiring board, or from the barrier strip (key 11, figure 14), mounted in the field wiring compartment.
4. Remove the transmitter from its mounting.
5. Perform the transmitter printed wiring board removal procedure.
6. Remove the pot/bushing assembly (key 3) from the housing (key 1).
7. When installing the pot/bushing assembly (key 3) in the transmitter housing, apply lubricant (key 50) to the bushing threads.
8. Install the pot/bushing assembly in the transmitter housing and tighten. Ensure free rotation of the potentiometer shaft.
9. Perform the printed wiring board replacement procedure.
10. Perform the installation, potentiometer alignment, and calibration procedures to return the transmitter to service.

Parts Ordering

When corresponding with your Emerson sales office about this equipment, always mention the transmitter serial number.

⚠ WARNING

Use only genuine Fisher replacement parts. Components that are not supplied by Emerson should not, under any circumstances, be used in any Fisher instrument. Use of components not supplied by Emerson may void your warranty, might adversely affect the performance of the instrument, and could cause personal injury or property damage.

Parts Kits

Description	Part Number
4200 Field Wiring Assembly with Alarms Repair Kit	
Includes keys 6 and 43	R4200X00012
Control PWB Repair Kit	
Includes keys 6 and 45	
4210/4220	R4210CBX012
4211/4221	R4211CBX012
4212/4222	R4212CBX012
4215	R4215CBX012
Pot/Bushing Repair Kit	
Includes keys 3 and 15	
4210/4211	R4210PSX012
4220/422	R4220PSX012

Figure 14. Housing Assembly for Fisher 4211 or 4221 Transmitter without Position Switches

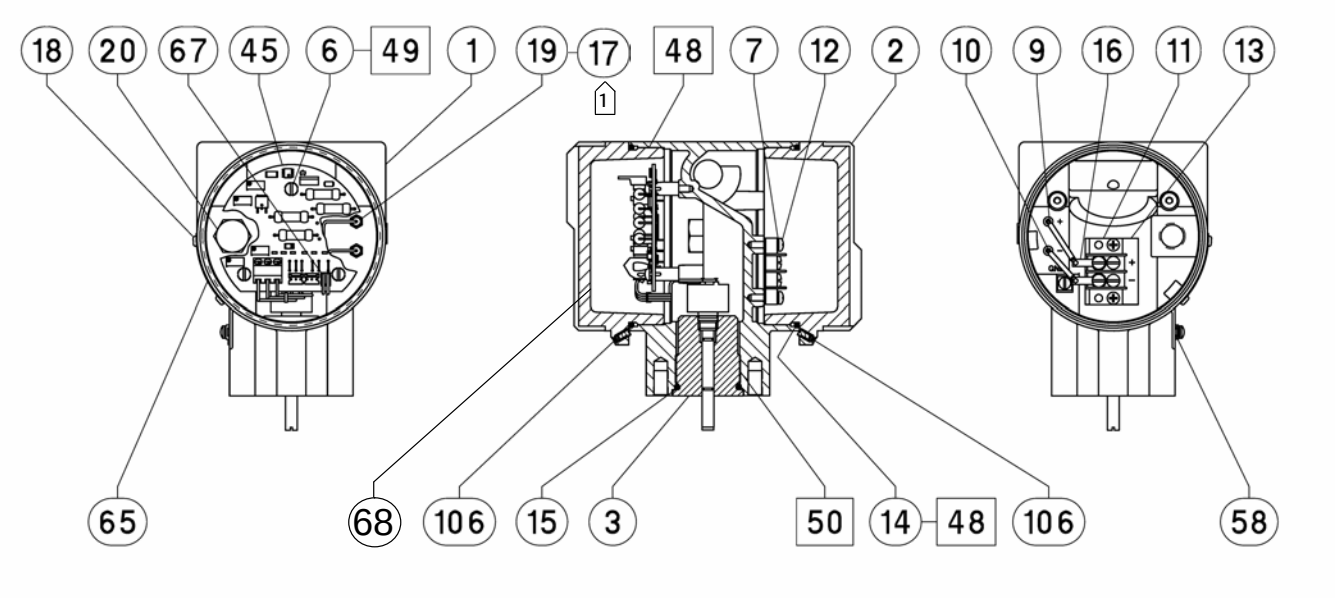

☐ APPLY LUBRICANT OR SEALANT
NOTE:
1 KEY 17 IS LOCATED BETWEEN THE TERMINAL POST BASE AND THE DEVICE HOUSING.
49A7891-M

Parts List

Note
Contact your Emerson sales office for Part Ordering information.

Transmitter Common Parts (Figures 11 and 14)

Key	Description
1	Housing
2	Cap (2 req'd)
3*	Pot/bushing Assembly
4	Wire Assembly (not used on 4211, 4221)
6	Machine Screw 4211, 4221 (3 req'd) 4210, 4212, 4215, 4220, 4222 (6 req'd)
7	Split Washer (4211, 4221 only) (2 req'd)
9	Wire (red)
10	Wire (black) (Not used on 4212, 4222)
11	Barrier Strip (4211, 4221 only)
12	Machine Screw (4211, 4221 only) (2 req'd)
13	Barrier Marker Strip (4211, 4221 only)
14*	O-Ring (2 req'd)
15*	O-Ring Bushing
16	Solder Lug (4211, 4221 only) (2 req'd)
17	Washer, Insulating 4212, 4222 (1 req'd) 4210, 4211, 4215, 4220, 4221 (2 req'd)
18	Self Tapping Screw (2 req'd)
19	RFI Filter 4212, 4222 (1 req'd) 4210, 4211, 4215, 4220, 4221 (2 req'd)
20	Pipe Plug (4211, 4221 only)
35	Machine Screw (4212, 4222 only)
43*	Field Circuit Printed Wiring Board Assembly
45	Transmitter Printed Wiring Board Assembly
48	Lithium grease (not furnished with transmitter)
49	Thread Locking Adhesive (medium strength) (not furnished with transmitter)
50	Anti-seize lubricant (not furnished with transmitter)
58	Wire Retainer (2 req'd)
65	Nameplate
67	2-Wire Connector
68	Identification label (see figure 5)
106	Set screws, hex socket (2 req'd)

*Recommended spare parts

Mounting Parts for Sliding-Stem Actuators

Parts for Mounting the Transmitter on 585C size 60 thru 130 (470 and 471) Actuator (figure 15)

Key	Description
21	Mounting plate
22	Yoke Spacer (2 req'd) Size 30, 45 only
23	Cap Screw (2 req'd)
24	Washer (2 req'd)
25	Operating Arm
26	Cap Screw
27	Square Nut
29	Torsional Spring
30	Lever Assembly
31	Shoulder Screw
32	Cap Screw (2 req'd)
33	Stem Bracket
34	Stem Mounting Bracket
35	Cap Screw (2 req'd)
36	Sleeve
37	Cap Screw (2 req'd)
38	Stem Washer (2 req'd)
39	Stem Spacer (2 req'd)
48	Lithium grease (not furnished with transmitter)
49	Thread Locking Adhesive (medium strength) (not furnished with transmitter)
51	Thread Locking Adhesive (mild strength) (not furnished with transmitter)

Parts for Mounting the Transmitter on 585C, size 60 thru 130 (470-7 and 471-7) Actuator (figure 15)

Key	Description
21	Mounting plate
23	Cap Screw (2 req'd)
24	Washer (2 req'd)
25	Operating Arm
26	Cap Screw
27	Square Nut
29	Torsional Spring
30	Lever Assembly
31	Shoulder Screw
32	Cap Screw (2 req'd)
33	Stem Bracket
34	Stem Mounting Bracket
35	Cap Screw (2 req'd)
36	Sleeve
37	Cap Screw (2 req'd)
38	Stem Washer (2 req'd)
39	Stem Spacer (2 req'd)
48	Lithium grease (not furnished with transmitter)
49	Thread Locking Adhesive (medium strength) (not furnished with transmitter)
51	Thread Locking Adhesive (mild strength) (not furnished with transmitter)

Parts for Mounting the Transmitter on Fisher 657 or 667 Actuator (figure 15)

Key	Description
21	Mounting plate
22	Yoke Spacer (2 req'd)
23	Cap Screw (2 req'd)
24	Washer (2 req'd)
25	Operating Arm
26	Cap Screw
27	Square Nut
29	Torsional Spring
30	Lever Assembly
31	Shoulder Screw
32	Cap Screw (2 req'd)
33	Stem Bracket
34	Stem Mounting Bracket
35	Cap Screw (2 req'd) 657 or 667
36	Sleeve
37	Cap Screw (2 req'd)
38	Stem Washer (2 req'd)
39	Stem Spacer (2 req'd)
48	Lithium grease (not furnished with transmitter)
49	Thread Locking Adhesive (medium strength) (not furnished with transmitter)
51	Thread Locking Adhesive (mild strength) (not furnished with transmitter)

Figure 15. Typical Transmitter Mounting on Fisher 585C Size 60 Thru 130 (470, 471, 470-7, 471-7), 657, or 667 Actuator

TRAVEL, mm (Inch)	PICK-UP PIN CONNECTION NUMBER
Up to 54 (2.125) max	1
Up to 105 (4.125) max	2

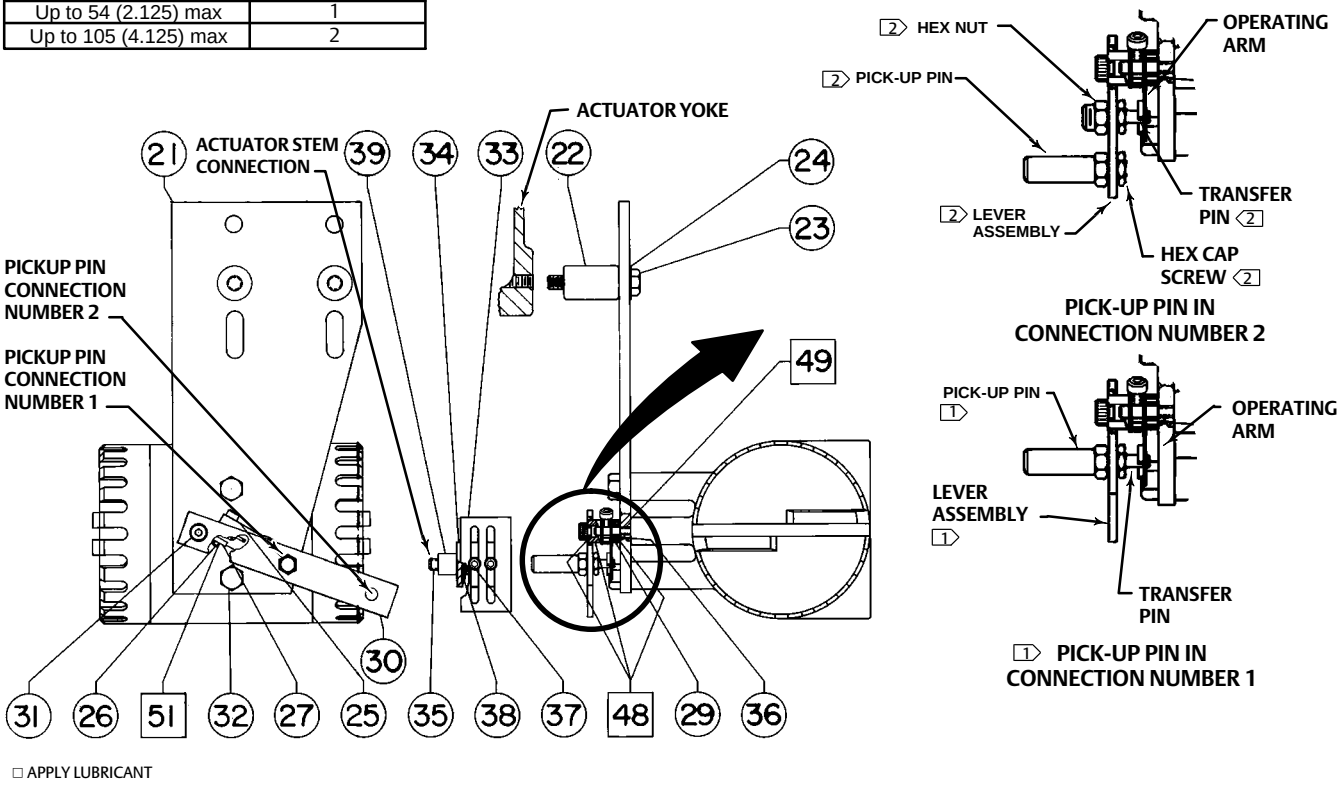

NOTES:

1 PICK-UP PIN AND TRANSFER PIN ARE PART OF LEVER ASSEMBLY FOR SIZE 30 THRU 130, UP TO 54 mm MAX TRAVEL, KEY 30

2 PICK-UP PIN, TRANSFER PIN, HEX NUT, AND HEX CAP SCREW ARE PART OF LEVER ASSEMBLY FOR SIZE 80 THRU 130 UP TO 105 mm MAX TRAVEL, KEY 30

39A7768-B

Figure 16. Typical Transmitter Mounting on Fisher 585 or 585R Actuator

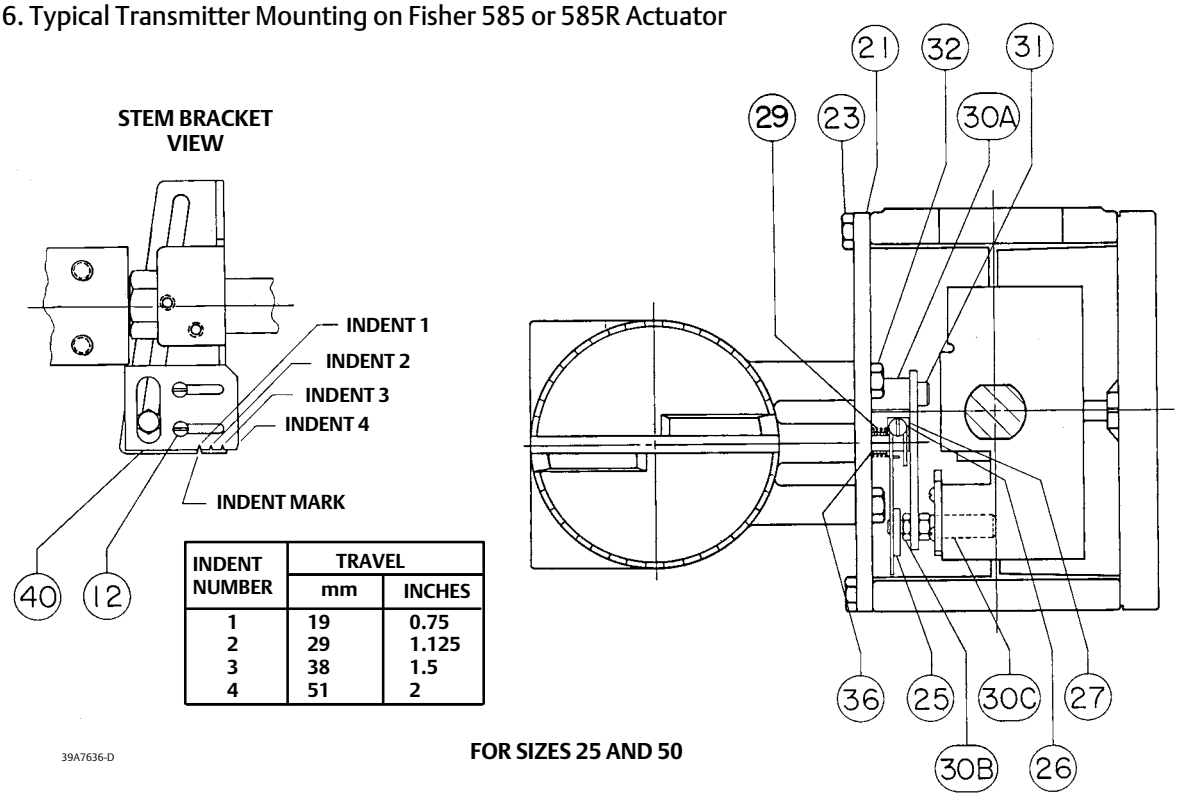

INDENT NUMBER	TRAVEL	
	mm	INCHES
1	19	0.75
2	29	1.125
3	38	1.5
4	51	2

FOR SIZES 25 AND 50

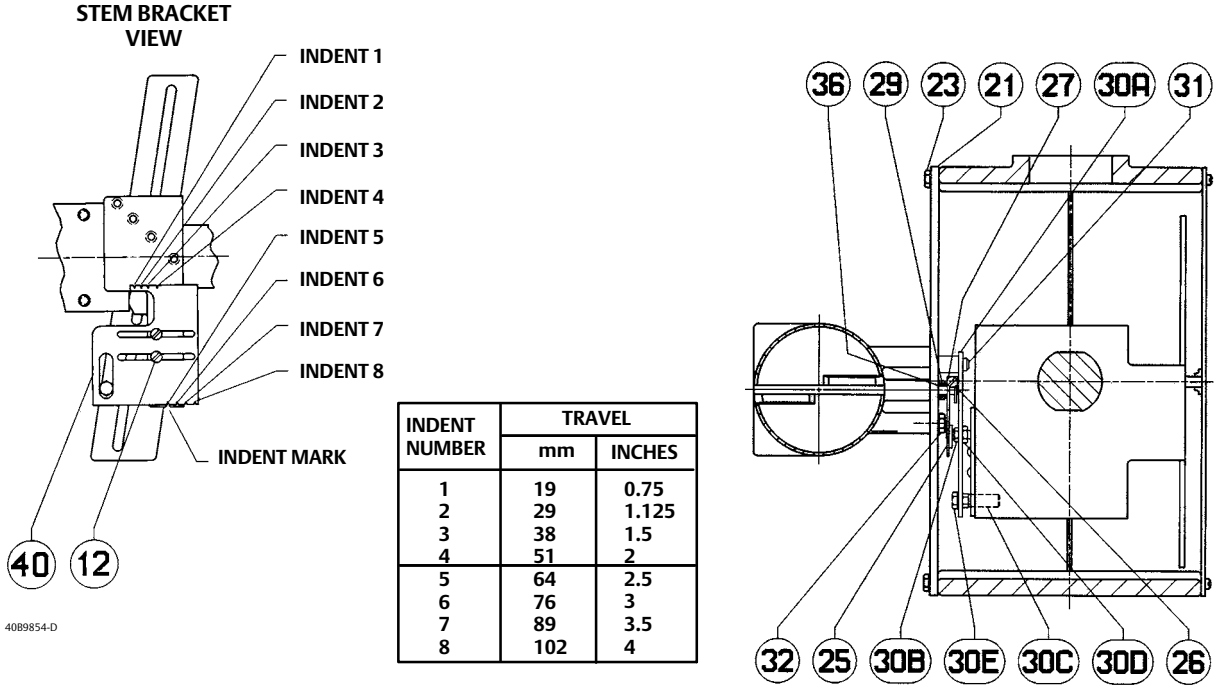

INDENT NUMBER	TRAVEL	
	mm	INCHES
1	19	0.75
2	29	1.125
3	38	1.5
4	51	2
5	64	2.5
6	76	3
7	89	3.5
8	102	4

FOR SIZES 100

Figure 17. Typical Transmitter Mounting on Fisher 585C or 585CR Actuator

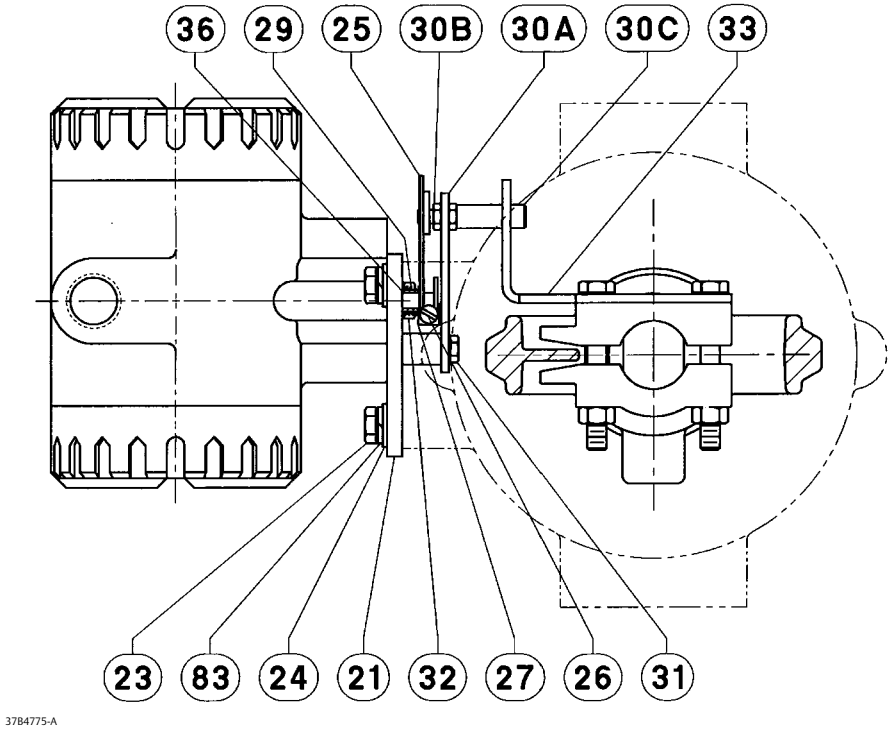

Parts for Mounting the Transmitter on 585 or 585C Actuators (figures 16 and 17)

Key	Description
12	Machine Screw (2 req'd) 585 & 585R only
21	Mounting Plate
23	Cap Screw 585 and 585R (4 req'd) 585C and 585CR (2 req'd)
24	Washer (2 req'd) 585C and 585CR only
25	Operating Arm
26	Cap Screw
27	Square Nut
29	Torsional Spring
30	Lever Assembly

Key	Description

Note
The lever assembly, key 30, is not used with size 25 and 50 actuators. Individual parts below (key 30A through 30C) are needed.

Key	Description
30A	Lever/Bearing Assembly
30B	Transfer Pin
30C	Pickup Pin
31	Shoulder Screw
32	Hex Cap Screw (2 req'd)
33	Stem Bracket 585C and 585CR only
36	Sleeve
40	Positioner Bracket 585 and 585R only
83	Lockwasher (2 req'd) 585C and 585CR only

Figure 18. Typical Transmitter Mounting on Fisher 1250 or 1250R Actuator

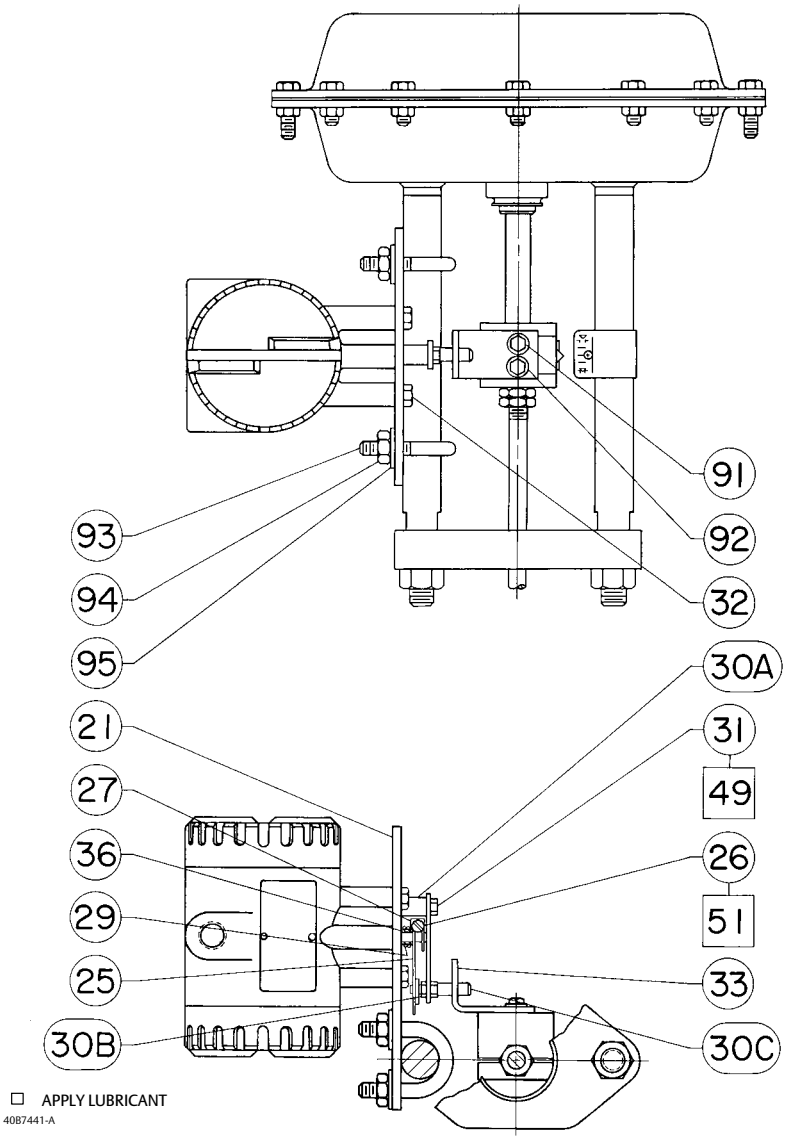

Parts for Mounting the Transmitter on 1250 or 1250R Actuator (figure 18)

Key	Description
21	Mounting Plate
25	Operating Arm
26	Cap Screw
27	Square Nut
29	Torsional Spring
30A	Lever/Bearing Assembly
30B	Transfer Pin
30C	Pickup Pin
31	Shoulder Screw
32	Hex Cap Screw (2 req'd)
33	Stem Bracket
36	Sleeve
49	Thread Locking Adhesive (medium strength) (not furnished with transmitter)
51	Thread Locking Adhesive (mild strength) (not furnished with transmitter)
91	Cap Screw (2 req'd)
92	Washer (2 req'd)
93	U-Bolt (2 req'd)
94	Hex Nut (4 req'd)
95	Washer (4 req'd)

Figure 19. Typical Transmitter Mounting on Fisher 1051, 1052, or 1061 Actuator

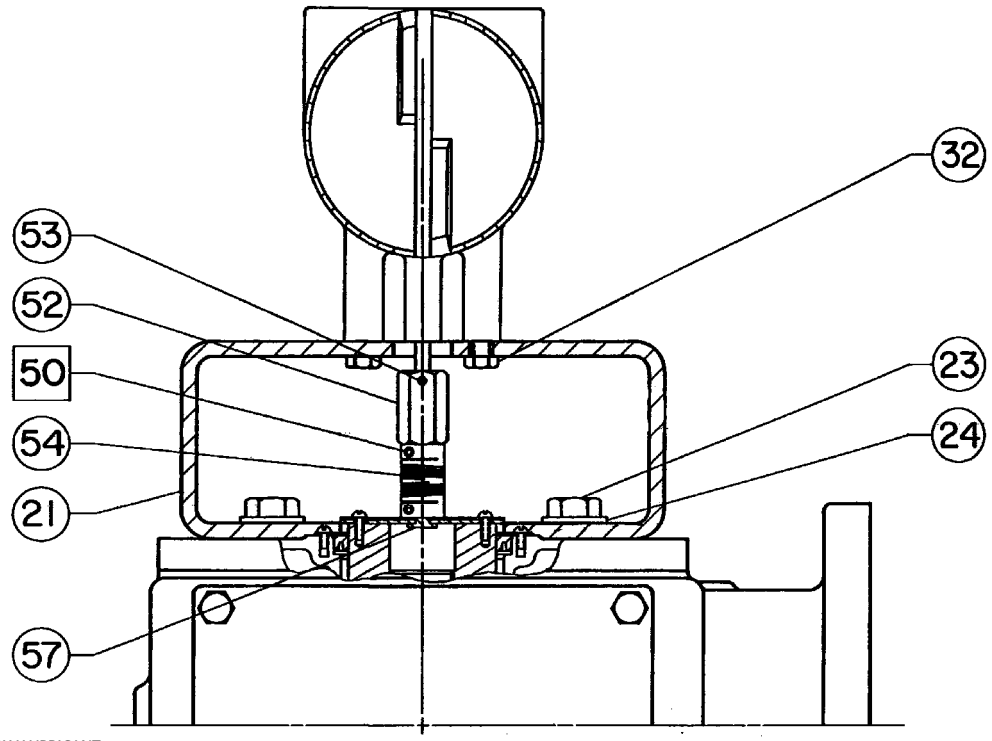

Mounting Parts for Rotary Actuators

Parts for Mounting the Transmitter on 1051, 1052, or 1061 Actuator (figure 19)

Key	Description
21	Mounting Plate w/o tandem linkage w/tandem linkage
32	Cap Screw (2 req'd)
50	Anti-seize lubricant (not furnished with transmitter)
52	Coupler
53	Socket Set Screw
54	Coupling
57	Coupling Plate Assembly

Figure 20. Typical Transmitter Mounting on Fisher 1052, Size 20 Actuator

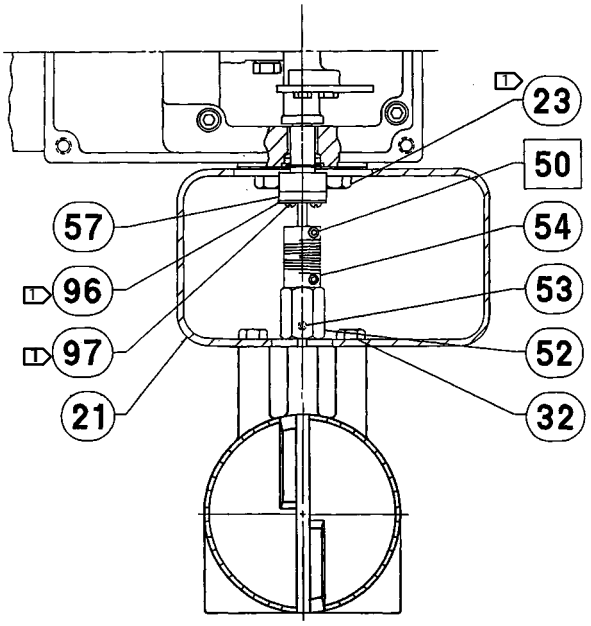

NOTE:
1 FIELD MOUNTING PARTS
☐ APPLY LUBRICANT

34A8843-B

Figure 21. Typical Transmitter Mounting on Fisher 1063, 1064, 1065, 1066, or 1066SR Actuator

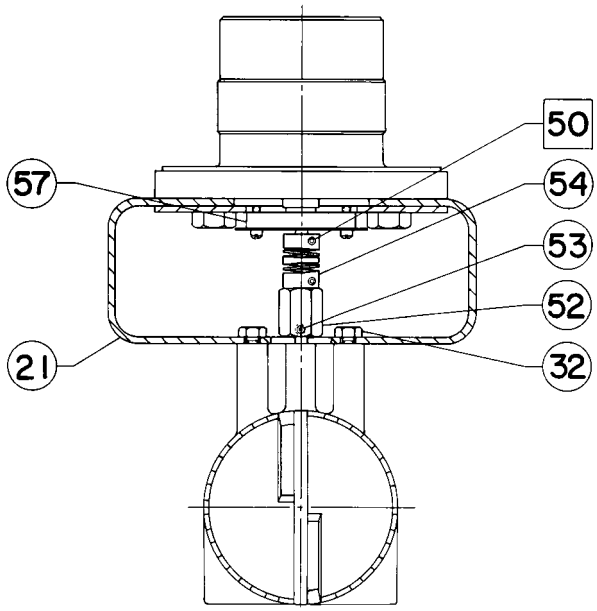

☐ APPLY LUBRICANT

34A8841-A

Parts for Mounting the Transmitter on 1052, Size 20 Actuator (figure 20)

Key	Description
21	Mounting Plate
32	Cap Screw (2 req'd)
50	Anti-seize lubricant (not furnished with transmitter)
52	Coupler
53	Socket Set Screw
54	Coupling
57	Coupling Plate Assembly

Parts for Mounting the Transmitter on 1063, 1064, 1065, 1066, or 1066R Actuator without Tandem Linkage (figure 21)

Key	Description
21	Mounting Plate
32	Cap Screw (2 req'd)
50	Anti-seize lubricant (not furnished with transmitter)
52	Coupler
53	Socket Set Screw
54	Coupling
57	Coupling Plate Assembly

Figure 22. Typical Transmitter Mounting on a Fisher 585C with Travel Greater than 4 inches (470-16 Actuator)

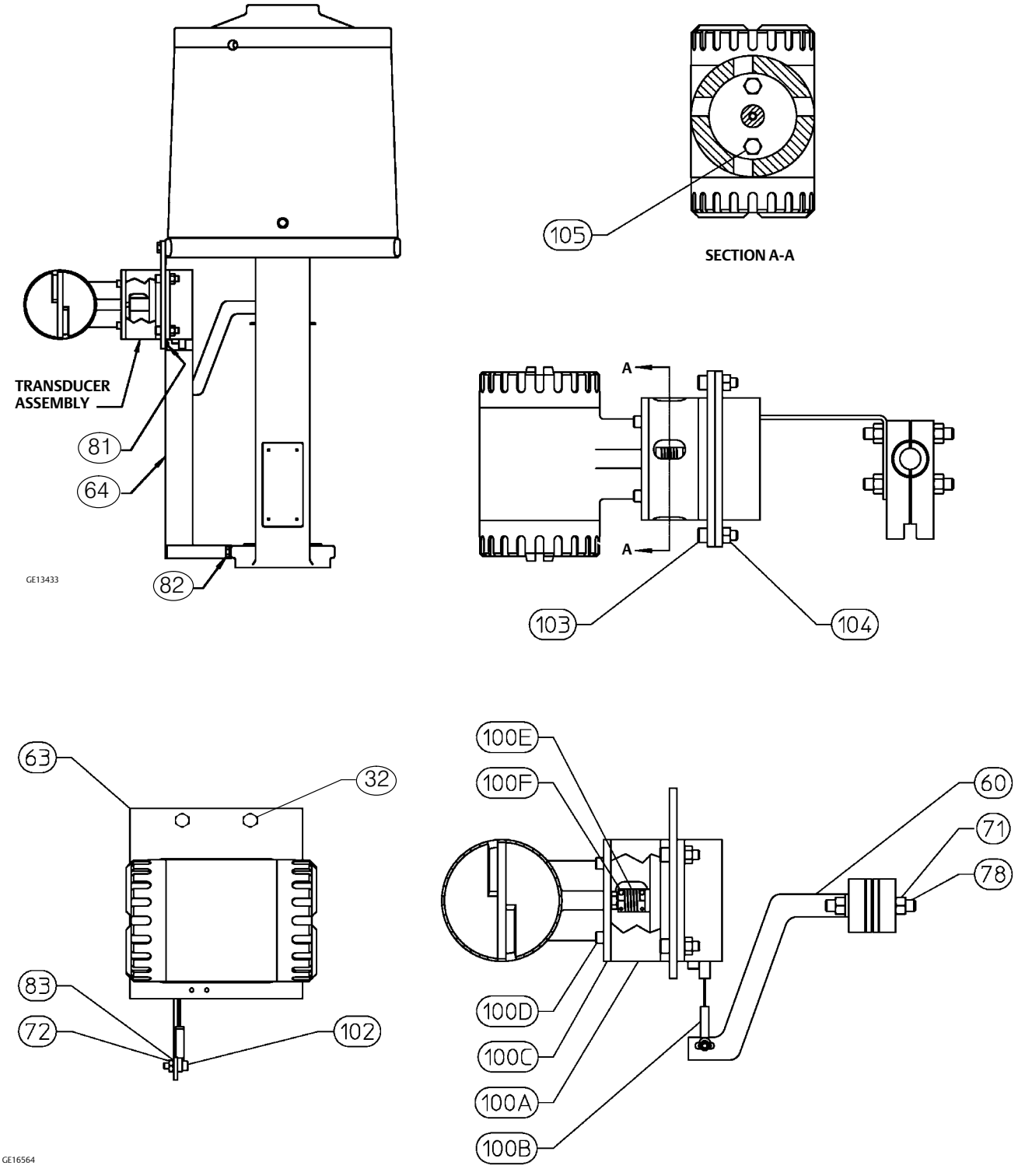

Mounting Parts for Long-Stroke Sliding-Stem Actuators

Parts for Mounting the Transmitter on 585C with travel greater than 4 inches (470-16 Actuator) (figure 22)

Key	Description
32	Hex Cap Screw (2 req'd)
60	Cable Bracket
63	Mounting Plate
64	Cable Cover Assembly
71	Hex Nut (4 req'd)
72	Hex Nut
78	Stud (2 req'd)
81	Machine Screw (2 req'd)
82	Cap Screw
83	Lockwasher
100	Transducer Assy
102	Cap Screw
103	Cap Screw (4 req'd)
104	Hex Nut (4 req'd)
105	Cap Screw (2 req'd)

Parts for Mounting the Transmitter on a 585CLS (490) Actuator (figure 23)

Key	Description
35	Stud
61	Cable Clip
63	Mounting Plate
69	Lower Yoke Cover
72	Hex Nut
73	Hex Nut (2 req'd)
75	Cap Screw (4 req'd)
77	Machine Screw (6 req'd)
83	Lockwasher
86	Washer (6 req'd)
100	Transducer Assy
101	Spacer (4 req'd)
102	Cap Screw
103	Cap Screw (4 req'd)
104	Hex Nut (4 req'd)
105	Cap Screw (2 req'd)

Figure 23. Typical Transmitter Mounting on a Fisher 585CLS (490) Actuator

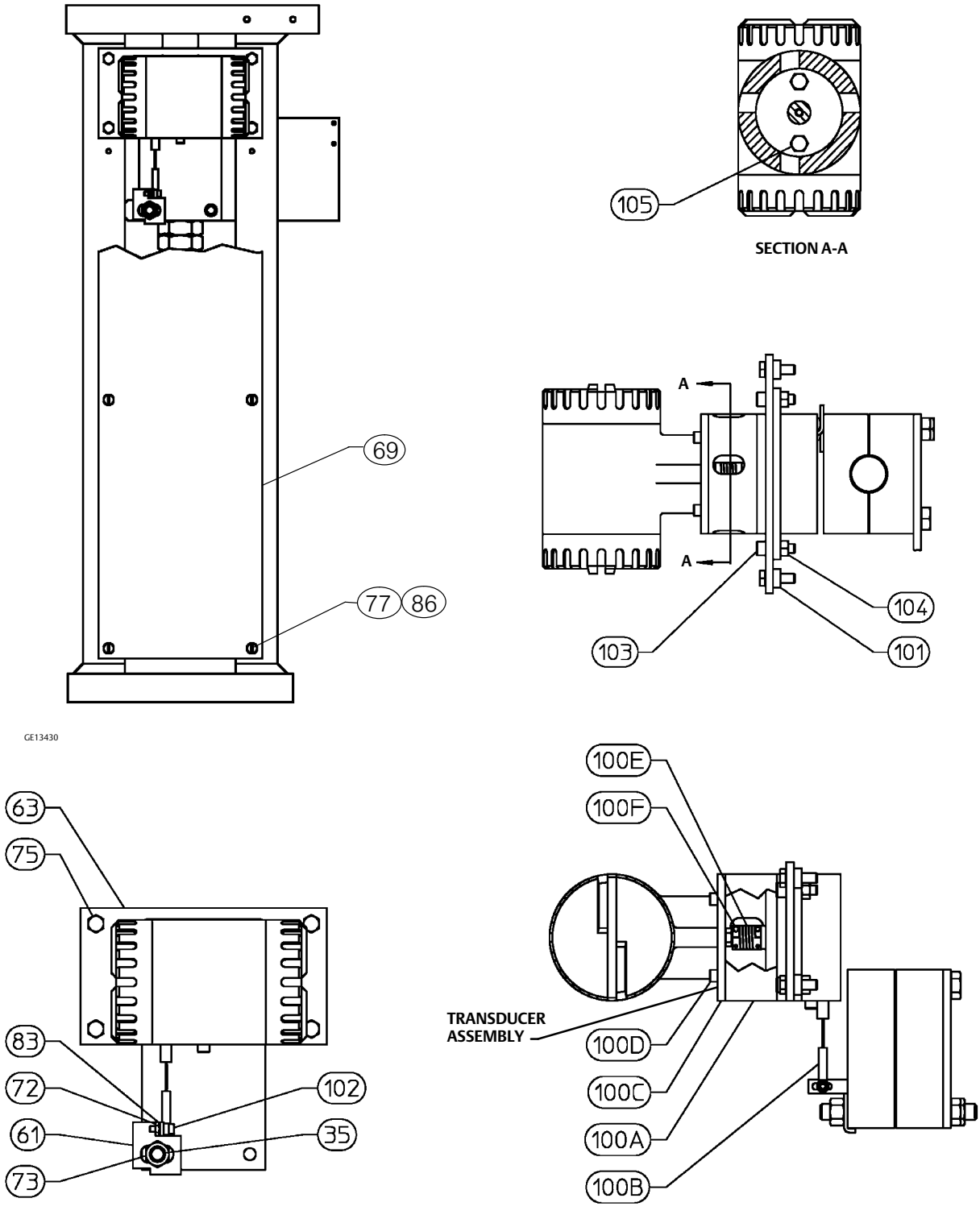

Neither Emerson, Emerson Automation Solutions, nor any of their affiliated entities assumes responsibility for the selection, use or maintenance of any product. Responsibility for proper selection, use, and maintenance of any product remains solely with the purchaser and end user.

Fisher is a mark owned by one of the companies in the Emerson Automation Solutions business unit of Emerson Electric Co. Emerson Automation Solutions, Emerson, and the Emerson logo are trademarks and service marks of Emerson Electric Co. All other marks are the property of their respective owners.

The contents of this publication are presented for informational purposes only, and while every effort has been made to ensure their accuracy, they are not to be construed as warranties or guarantees, express or implied, regarding the products or services described herein or their use or applicability. All sales are governed by our terms and conditions, which are available upon request. We reserve the right to modify or improve the designs or specifications of such products at any time without notice.

Emerson Automation Solutions
Marshalltown, Iowa 50158 USA
Sorocaba, 18087 Brazil
Cernay, 68700 France
Dubai, United Arab Emirates
Singapore 128461 Singapore

www.Fisher.com

© 1985, 2022 Fisher Controls International LLC. All rights reserved.