Technical Information
LPGmass

Coriolis flowmeter



The refueling application flowmeter with seamless system integration

Application

- Measuring principle operates independently of physical fluid properties such as viscosity or density
- Accurate measurement of liquefied petroleum gas in refueling and distribution applications

Device properties

- Flow rates up to 180 000 kg/h (6 600 lb/min)
- Volume flow calculation as per API Table 53
- Robust, compact transmitter housing
- Modbus RS485
- Designed to meet application needs

Your benefits

- Excellent operational safety – reliable under extreme ambient conditions
- Fewer process measuring points – multivariable measurement (flow, density, temperature)
- Space-saving installation – no in/outlet run needs
- Space-saving transmitter – full functionality on smallest footprint
- Fast commissioning – pre-configured devices
- Automatic recovery of data for servicing

Endress+Hauser
People for Process Automation

Table of contents

Document information 3
Symbols used 3

Function and system design 4
Measuring principle 4
Measuring system 4
Equipment architecture 5
Safety 5

Input 5
Measured variable 5
Measuring range 6
Operable flow range 6

Output 6
Output signal 6
Signal on alarm 6
Ex connection data 7
Low flow cut off 7
Galvanic isolation 7
Protocol-specific data 7

Power supply 8
Terminal assignment 8
Supply voltage 10
Power consumption 10
Current consumption 10
Power supply failure 11
Electrical connection 11
Potential equalization 12
Terminals 12
Cable entries 12
Cable specification 12

Performance characteristics 13
reference operating conditions 13
Maximum measured error 13
Repeatability 14
Response time 14
Influence of medium temperature 14
Influence of medium pressure 14
Design fundamentals 15

Installation 15
Mounting location 16
Orientation 16
Inlet and outlet runs 17
Special mounting instructions 17
Mounting Safety Barrier Promass 100 17

Environment 17
Ambient temperature range 17
Storage temperature 19
Climate class 19
Degree of protection 19
Vibration resistance 19
Shock resistance 19
Shock resistance 19
Electromagnetic compatibility (EMC) 19

Process 19
Medium temperature range 19
Density 19
Pressure-temperature ratings 19
Flow limit 20
Pressure loss 21
Vibrations 21

Mechanical construction 22
Dimensions in SI units 22
Dimensions in US units 25
Weight 28
Materials 28
Process connections 29
Surface roughness 29

Operability 29
Operating concept 29
Service interface 30

Certificates and approvals 30
CE mark 30
C-Tick symbol 30
Ex approval 30
Modbus RS485 certification 31
Measuring instrument approval 31

Ordering information 31

Accessories 31
Service-specific accessories 31

Supplementary documentation 32
Standard documentation 32
Supplementary device-dependent documentation 32

Registered trademarks 33

Document information

Symbols used

Electrical symbols

Symbol	Meaning
⎓	Direct current
~	Alternating current
⎓~	Direct current and alternating current
⏚	**Ground connection** A grounded terminal which, as far as the operator is concerned, is grounded via a grounding system.
⊜	**Protective ground connection** A terminal which must be connected to ground prior to establishing any other connections.
⏚	**Equipotential connection** A connection that has to be connected to the plant grounding system: This may be a potential equalization line or a star grounding system depending on national or company codes of practice.

Symbols for certain types of information

Symbol	Meaning
✓	**Permitted** Procedures, processes or actions that are permitted.
✓✓	**Preferred** Procedures, processes or actions that are preferred.
✗	**Forbidden** Procedures, processes or actions that are forbidden.
ℹ	**Tip** Indicates additional information.
📖	Reference to documentation
📄	Reference to page
🖼	Reference to graphic
👁	Visual inspection

Symbols in graphics

Symbol	Meaning
1, 2, 3,...	Item numbers
1., 2., 3....	Series of steps
A, B, C, ...	Views
A-A, B-B, C-C, ...	Sections
EX	Hazardous area
EX	Safe area (non-hazardous area)
≈➡	Flow direction

Function and system design

Measuring principle

The measuring principle is based on the controlled generation of Coriolis forces. These forces are always present in a system when both translational and rotational movements are superimposed.

$F_c = 2 \cdot \Delta m\ (v \cdot \omega)$

F_c = Coriolis force

Δm = moving mass

ω = rotational velocity

v = radial velocity in rotating or oscillating system

The amplitude of the Coriolis force depends on the moving mass Δm, its velocity v in the system and thus on the mass flow. Instead of a constant rotational velocity ω, the sensor uses oscillation.

Density measurement
The measuring tube is continuously excited at its resonance frequency. A change in the mass and thus the density of the oscillating system (comprising measuring tube and fluid) results in a corresponding, automatic adjustment in the oscillation frequency. Resonance frequency is thus a function of medium density. The microprocessor utilizes this relationship to obtain a density signal.

Temperature measurement
The temperature of the measuring tube is determined in order to calculate the compensation factor due to temperature effects. This signal corresponds to the process temperature and is also available as an output signal.

Measuring system

The device consists of a transmitter and a sensor. If a device with Modbus RS485 intrinsically safe is ordered, the Safety Barrier Promass 100 is part of the scope of supply and must be implemented to operate the device.

The device is available as a compact version:
The transmitter and sensor form a mechanical unit.

Transmitter

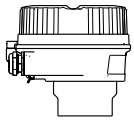 A0016693	Device versions and materials: Compact, aluminum coated: Aluminum, AlSi10Mg, coated Configuration: Via operating tools (e.g. FieldCare, DeviceCare)

Sensor

LPGmass 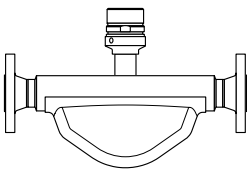 A0029466	▪ Simultaneous measurement of flow, density and temperature (multivariable) ▪ Nominal diameter range: DN 8 to 50 (⅜ to 2") ▪ Materials: – Sensor: stainless steel, 1.4301 (304) – Measuring tubes: stainless steel, 1.4539 (904L) – Process connections: stainless steel, 1.4404 (316/316L) ▪ Limiting medium pressure range: max. 100 bar (1 450 psi)

Safety Barrier Promass 100

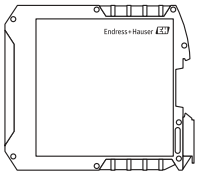

- Dual-channel safety barrier for installation in non-hazardous locations or zone 2/div. 2:
  - Channel 1: DC 24 V power supply
  - Channel 2: Modbus RS485
- In addition to current, voltage and power limitation, it offers galvanic isolation of circuits for explosion protection.
- Easy top-hat rail mounting (DIN 35 mm) for installation in control cabinets

Equipment architecture

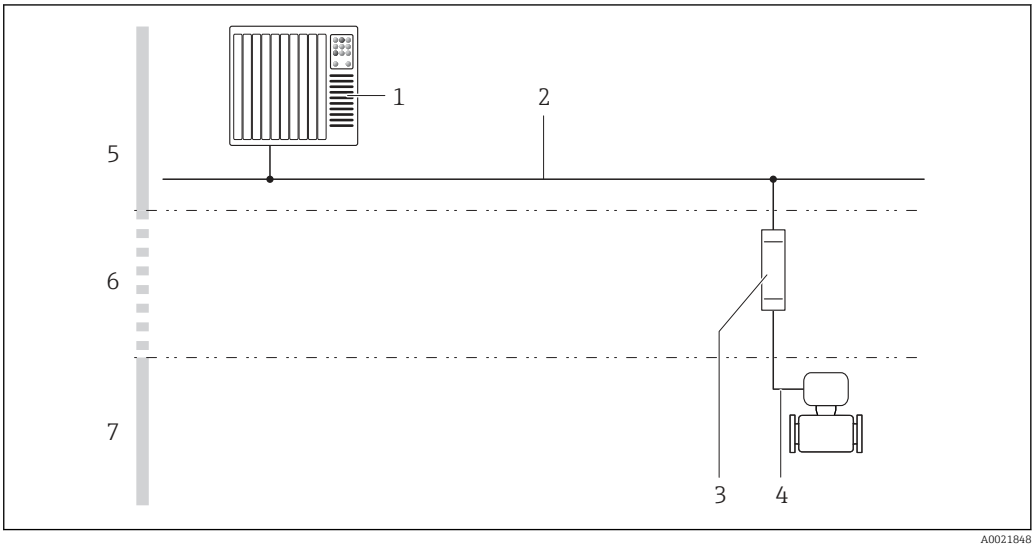

1 Possibilities for integrating measuring devices into a system

1 Control system (e.g. PLC)
2 Modbus RS485
3 Safety Barrier Promass 100
4 Modbus RS485 intrinsically safe
5 Non-hazardous area
6 Non-hazardous area and Zone 2/Div. 2
7 Hazardous area and Zone 1/Div. 1

Safety

IT security

We only provide a warranty if the device is installed and used as described in the Operating Instructions. The device is equipped with security mechanisms to protect it against any inadvertent changes to the device settings.

IT security measures in line with operators' security standards and designed to provide additional protection for the device and device data transfer must be implemented by the operators themselves.

Input

Measured variable

Direct measured variables

- Mass flow
- Density
- Temperature

Calculated measured variables

- Volume flow
- Corrected volume flow
- Corrected volume

Measuring range

Measuring ranges (not custody transfer mode)

DN		Measuring range full scale values $\dot{m}_{min(F)}$ to $\dot{m}_{max(F)}$	
[mm]	[in]	[kg/h]	[lb/min]
8	⅜	0 to 2 000	0 to 73.5
15	½	0 to 6 500	0 to 238
25	1	0 to 18 000	0 to 660
40	1½	0 to 45 000	0 to 1 650
50	2	0 to 70 000	0 to 2 570

The values of the corresponding custody transfer certificate apply in custody transfer mode.

Recommended measuring range

"Flow limit" section → 20

Operable flow range

Over 1000 : 1.

Flow rates above the preset full scale value do not override the electronics unit, with the result that the totalizer values are registered correctly.

Output

Output signal

Modbus RS485

Physical interface	In accordance with EIA/TIA-485-A standard
Terminating resistor	For device version used in intrinsically safe areas: integrated and can be activated via DIP switches on the Safety Barrier Promass 100

Signal on alarm

Depending on the interface, failure information is displayed as follows:

Modbus RS485

Failure mode	Choose from: ▪ NaN value instead of current value ▪ Last valid value

Interface/protocol

- Via digital communication:
  Modbus RS485
- Via service interface

Plain text display	With information on cause and remedial measures

Light emitting diodes (LED)

Status information	Status indicated by various light emitting diodes The following information is displayed depending on the device version: ▪ Supply voltage active ▪ Data transmission active ▪ Device alarm/error has occurred

Ex connection data

These values only apply for the following device version:
Order code for "Output", option M "Modbus RS485", for use in intrinsically safe areas

Safety Barrier Promass 100

Safety-related values

Terminal numbers			
Supply voltage		Signal transmission	
2 (L-)	1 (L+)	26 (A)	27 (B)
U_{nom} = DC 24 V U_{max} = AC 260 V		U_{nom} = DC 5 V U_{max} = AC 260 V	

Intrinsically safe values

Terminal numbers			
Supply voltage		Signal transmission	
20 (L-)	10 (L+)	62 (A)	72 (B)
U_o = 16.24 V I_o = 623 mA P_o = 2.45 W With IIC [1]: L_o = 92.8 µH, C_o = 0.433 µF, L_o/R_o = 14.6 µH/Ω			
For an overview and for information on the interdependencies between the gas group - sensor - nominal diameter, see the "Safety Instructions" (XA) document for the measuring device			

1) The gas group depends on the sensor and nominal diameter.

Transmitter

Intrinsically safe values

Order code for "Approval"	Terminal numbers			
	Supply voltage		Signal transmission	
	20 (L-)	10 (L+)	62 (A)	72 (B)
▪ Option **BM**: ATEX II2G + IECEx Z1 Ex ia, II2D Ex tb ▪ Option **BU**: ATEX II2G + IECEx Z1 Ex ia ▪ Option **C2**: CSA C/US IS Cl. I, II, III Div. 1 ▪ Option **MM**: INMETRO Ex ia Zone 1 ▪ Option **NG**: NEPSI Ex ia Zone 1 ▪ Option **85**: ATEX II2G + IECEx Z1 Ex ia + CSA C/US IS Cl. I, II, III Div. 1	U_i = 16.24 V I_i = 623 mA P_i = 2.45 W L_i = 0 µH C_i = 6 nF			
For an overview and for information on the interdependencies between the gas group - sensor - nominal diameter, see the "Safety Instructions" (XA) document for the measuring device				

Low flow cut off

The switch points for low flow cut off are user-selectable.

Galvanic isolation

The following connections are galvanically isolated from each other:
- Outputs
- Power supply

Protocol-specific data

Modbus RS485

Protocol	Modbus Applications Protocol Specification V1.1
Device type	Slave
Slave address range	1 to 247
Broadcast address range	0

Function codes	▪ 03: Read holding register ▪ 04: Read input register ▪ 06: Write single registers ▪ 08: Diagnostics ▪ 16: Write multiple registers ▪ 23: Read/write multiple registers
Broadcast messages	Supported by the following function codes: ▪ 06: Write single registers ▪ 16: Write multiple registers ▪ 23: Read/write multiple registers
Supported baud rate	▪ 1200 BAUD ▪ 2400 BAUD ▪ 4800 BAUD ▪ 9600 BAUD ▪ 19200 BAUD ▪ 38400 BAUD ▪ 57600 BAUD ▪ 115200 BAUD
Data transfer mode	▪ ASCII ▪ RTU
Data access	Each device parameter can be accessed via Modbus RS485. For Modbus register information, see "Description of device parameters" documentation → 32

Power supply

Terminal assignment

Overview: housing version and connection versions

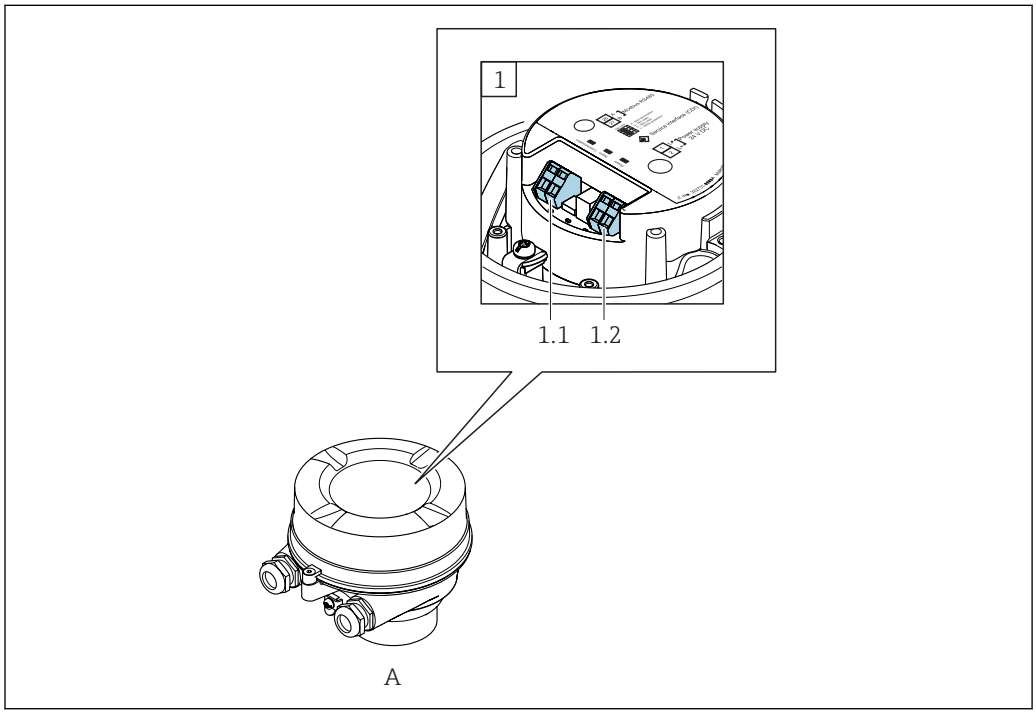

A Housing version: compact, aluminum coated
1 Connection version: Modbus RS485
1.1 Signal transmission
1.2 Supply voltage

Transmitter

Modbus RS485 connection version

For use in the intrinsically safe area. Connection via Safety Barrier Promass 100.

Order code for "Output", option **M**

Order code for "Housing"	Connection methods available		Possible options for order code "Electrical connection"
	Output	Power supply	
Options **A**	terminals	terminals	▪ Option **B**: thread M20x1 ▪ Option **C**: thread G ½" ▪ Option **D**: thread NPT ½"
Order code for "Housing": Option **A**: compact, coated aluminum			

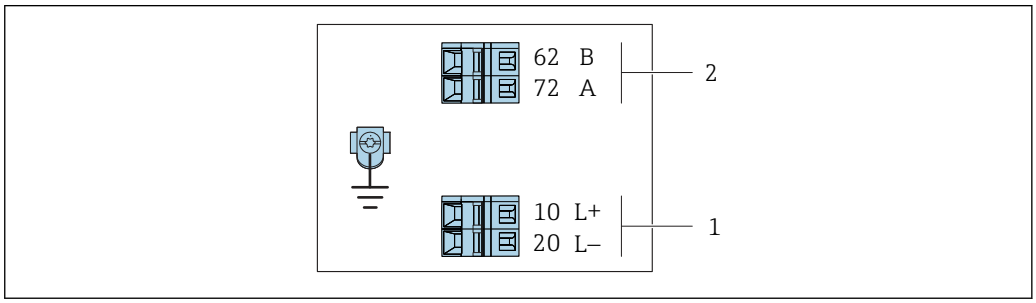

2 *Modbus RS485 terminal assignment, connection version for use in intrinsically safe areas (connection via Safety Barrier Promass 100)*

1 *Intrinsically safe power supply*
2 *Modbus RS485*

Order code for "Output"	20 (L-)	10 (L+)	72 (B)	62 (A)
Option **M**	Intrinsically safe supply voltage		Modbus RS485 intrinsically safe	
Order code for "Output": Option **M**: Modbus RS485, for use in intrinsically safe areas (connection via Safety Barrier Promass 100)				

Safety Barrier Promass 100

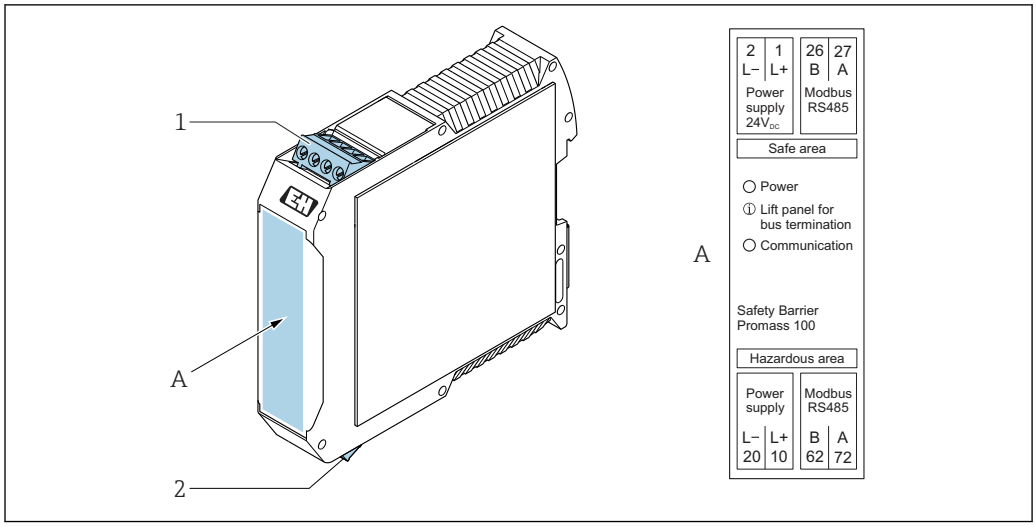

3 Safety Barrier Promass 100 with terminals

1 Non-hazardous area and Zone 2/Div. 2
2 Intrinsically safe area

Supply voltage

The power unit must be tested to ensure it meets safety requirements (e.g. PELV, SELV).

Transmitter

For device version with communication type:
Modbus RS485, device version:
For use in the intrinsically safe area: power supply via Safety Barrier Promass 100

Safety Barrier Promass 100

DC 20 to 30 V

Power consumption

Transmitter

Order code for "Output"	Maximum Power consumption
Option **M**: Modbus RS485, for use in intrinsically safe areas	2.45 W

Safety Barrier Promass 100

Order code for "Output"	Maximum Power consumption
Option **M**: Modbus RS485, for use in intrinsically safe areas	4.8 W

Current consumption

Transmitter

Order code for "Output"	Maximum Current consumption	Maximum switch-on current
Option **M**: Modbus RS485, for use in intrinsically safe areas	145 mA	16 A (< 0.4 ms)

Safety Barrier Promass 100

Order code for "Output"	Maximum Current consumption	Maximum switch-on current
Option **M**: Modbus RS485, for use in intrinsically safe areas	230 mA	10 A (< 0.8 ms)

Power supply failure

- Totalizers stop at the last value measured.
- Configuration is retained in the device memory.
- Error messages (incl. total operated hours) are stored.

Electrical connection

Connecting the transmitter

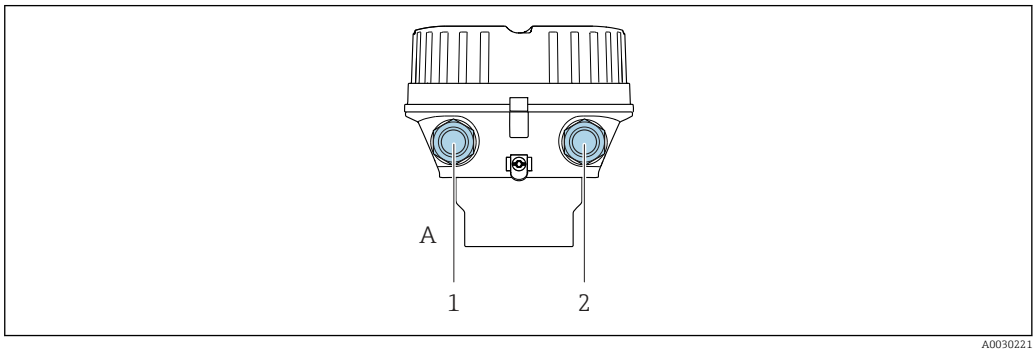

A0030221

A Housing version: compact, aluminum coated
1 Cable entry for signal transmission
2 Cable entry for supply voltage

Terminal assignment→ 8

Connection examples

Modbus RS485

Modbus RS485 intrinsically safe

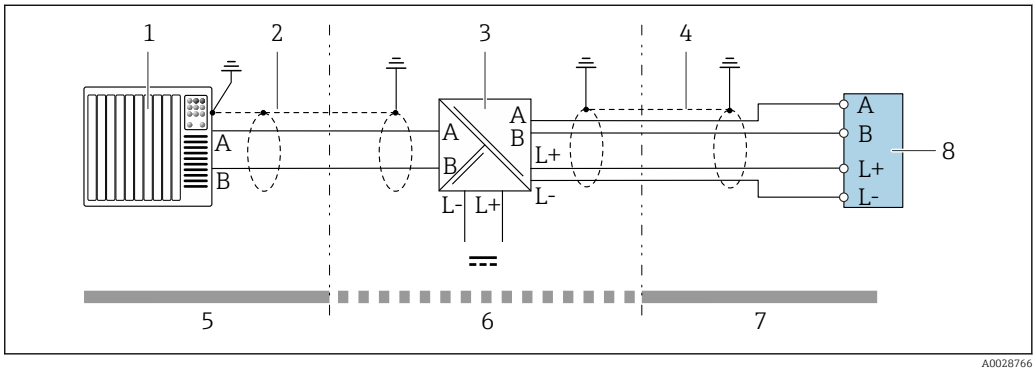

A0028766

4 *Connection example for Modbus RS485 intrinsically safe*

1 Control system (e.g. PLC)
2 Cable shield, observe cable specifications
3 Safety Barrier Promass 100
4 Observe cable specifications
5 Non-hazardous area
6 Non-hazardous area and Zone 2/Div. 2
7 Intrinsically safe area
8 Transmitter

Potential equalization

Requirements

No special measures for potential equalization are required.

For devices intended for use in hazardous locations, please observe the guidelines in the Ex documentation (XA).

Terminals

Transmitter
Spring terminals for wire cross-sections0.5 to 2.5 mm² (20 to 14 AWG)

Safety Barrier Promass 100
Plug-in screw terminals for wire cross-sections0.5 to 2.5 mm² (20 to 14 AWG)

Cable entries

- Cable gland: M20 × 1.5 with cable ⌀6 to 12 mm (0.24 to 0.47 in)
- Thread for cable entry:
  - NPT ½"
  - G ½"
  - M20

Cable specification

Permitted temperature range

- −40 °C (−40 °F) to +80 °C (+176 °F)
- Minimum requirement: cable temperature range ≥ ambient temperature +20 K

Power supply cable

Standard installation cable is sufficient.

Signal cable

Modbus RS485

The EIA/TIA-485 standard specifies two types of cable (A and B) for the bus line which can be used for every transmission rate. Cable type A is recommended.

Cable type	A
Characteristic impedance	135 to 165 Ω at a measuring frequency of 3 to 20 MHz
Cable capacitance	<30 pF/m
Wire cross-section	>0.34 mm² (22 AWG)
Cable type	Twisted pairs
Loop resistance	≤110 Ω/km
Signal damping	Max. 9 dB over the entire length of the cable cross-section
Shield	Copper braided shielding or braided shielding with foil shield. When grounding the cable shield, observe the grounding concept of the plant.

Connecting cable between Safety Barrier Promass 100 and measuring device

Cable type	Shielded twisted-pair cable with 2x2 wires. When grounding the cable shield, observe the grounding concept of the plant.
Maximum cable resistance	2.5 Ω, one side

Comply with the maximum cable resistance specifications to ensure the operational reliability of the measuring device.

The maximum cable length for individual wire cross-sections is specified in the table below. Observe the maximum capacitance and inductance per unit length of the cable and connection values for hazardous areas .

Wire cross-section		Maximum cable length	
[mm²]	[AWG]	[m]	[ft]
0.5	20	70	230
0.75	18	100	328
1.0	17	100	328
1.5	16	200	656
2.5	14	300	984

Performance characteristics

reference operating conditions

- Error limits based on ISO 11631
- Water with +15 to +45 °C (+59 to +113 °F) at2 to 6 bar (29 to 87 psi)
- Specifications as per calibration protocol
- Accuracy based on accredited calibration rigs that are traced to ISO 17025.

To obtain measured errors, use the *Applicator* sizing tool → 31

Maximum measured error

Base accuracy

Design fundamentals → 15

Mass flow

±0.2 % o.r.

Volume flow

±0.3 % o.r.

Density

±20 kg/m³ (±0.02 SGU)

Temperature

±0.5 °C ± 0.005 · T °C (±0.9 °F ± 0.003 · (T − 32) °F)

Zero point stability

DN		Zero point stability	
[mm]	[in]	[kg/h]	[lb/min]
8	⅜	0.20	0.007
15	½	0.65	0.024
25	1	1.80	0.066
40	1½	4.50	0.165
50	2	7.0	0.257

Flow values

Flow values as turndown parameter depending on nominal diameter.

SI units

DN [mm]	1:1 [kg/h]	1:10 [kg/h]	1:20 [kg/h]	1:50 [kg/h]	1:100 [kg/h]	1:500 [kg/h]
8	2000	200	100	40	20	4
15	6500	650	325	130	65	13
25	18000	1800	900	360	180	36
40	45000	4500	2250	900	450	90
50	70000	7000	3500	1400	700	140

US units

DN [inch]	1:1 [lb/min]	1:10 [lb/min]	1:20 [lb/min]	1:50 [lb/min]	1:100 [lb/min]	1:500 [lb/min]
⅜	73.50	7.350	3.675	1.470	0.735	0.147
½	238.9	23.89	11.95	4.778	2.389	0.478
1	661.5	66.15	33.08	13.23	6.615	1.323
1½	1654	165.4	82.70	33.08	16.54	3.308
2	2573	257.3	128.7	51.46	25.73	5.146

Accuracy of outputs

The output accuracy must be factored into the measured error if analog outputs are used, but can be ignored for fieldbus outputs (e.g. Modbus RS485, EtherNet/IP).

The outputs have the following base accuracy specifications.

Repeatability

o.r. = of reading; 1 g/cm³ = 1 kg/l; T = medium temperature

Base repeatability

Mass flow
±0.10 % % o.r.

Volume flow
±0.15 % % o.r.

Design fundamentals → 🖹 15

Density
±10 kg/m³ (±0.01 SGU)

Temperature
±0.25 °C ± 0.0025 · T °C (±0.45 °F ± 0.0015 · (T−32) °F)

Response time

- The response time depends on the configuration (damping).
- Response time in the event of erratic changes in the measured variable (mass flow only): After 100 ms → 95 % of full scale value

Influence of medium temperature

Mass flow
When there is a difference between the temperature for zero point adjustment and the process temperature, the typical measured error of the sensor is ±0.0003 % of the full scale value/°C (±0.00015 % of the full scale value/°F).

Influence of medium pressure

The table below shows the effect on accuracy of mass flow due to a difference between calibration pressure and process pressure.

o.r. = of reading

DN		[% o.r./bar]	[% o.r./psi]
[mm]	[in]		
8	⅜	no influence	
15	½	no influence	
25	1	no influence	
40	1½	no influence	
50	2	−0.009	−0.0006

Design fundamentals

o.r. = of reading, o.f.s. = of full scale value

BaseAccu = base accuracy in % o.r., BaseRepeat = base repeatability in % o.r.

MeasValue = measured value; ZeroPoint = zero point stability

Calculation of the maximum measured error as a function of the flow rate

Flow rate	Maximum measured error in % o.r.
$\geq \frac{\text{ZeroPoint}}{\text{BaseAccu}} \cdot 100$ A0021332	$\pm$ BaseAccu A0021339
$< \frac{\text{ZeroPoint}}{\text{BaseAccu}} \cdot 100$ A0021333	$\pm \frac{\text{ZeroPoint}}{\text{MeasValue}} \cdot 100$ A0021334

Calculation of the maximum repeatability as a function of the flow rate

Flow rate	Maximum repeatability in % o.r.
$\geq \frac{½ \cdot \text{ZeroPoint}}{\text{BaseRepeat}} \cdot 100$ A0021335	$\pm$ BaseRepeat A0021340
$< \frac{½ \cdot \text{ZeroPoint}}{\text{BaseRepeat}} \cdot 100$ A0021336	$\pm ½ \cdot \frac{\text{ZeroPoint}}{\text{MeasValue}} \cdot 100$ A0021337

Example for max. measured error

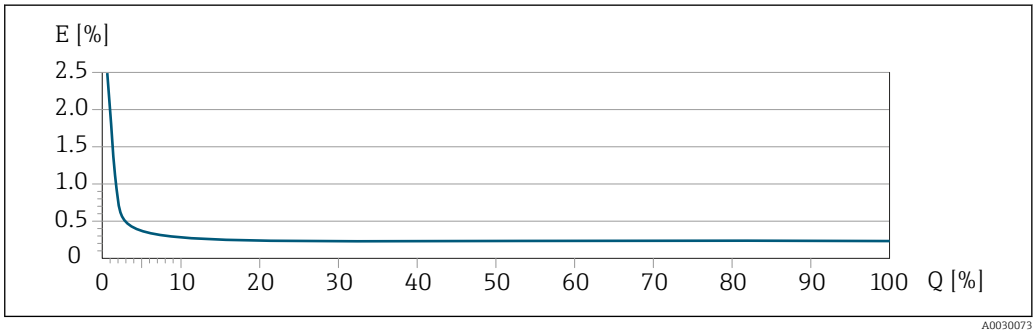

A0030073

E Error: maximum measured error in % o.r.
Q Flow rate as %

Installation

No special measures such as supports etc. are necessary. External forces are absorbed by the construction of the device.

Mounting location

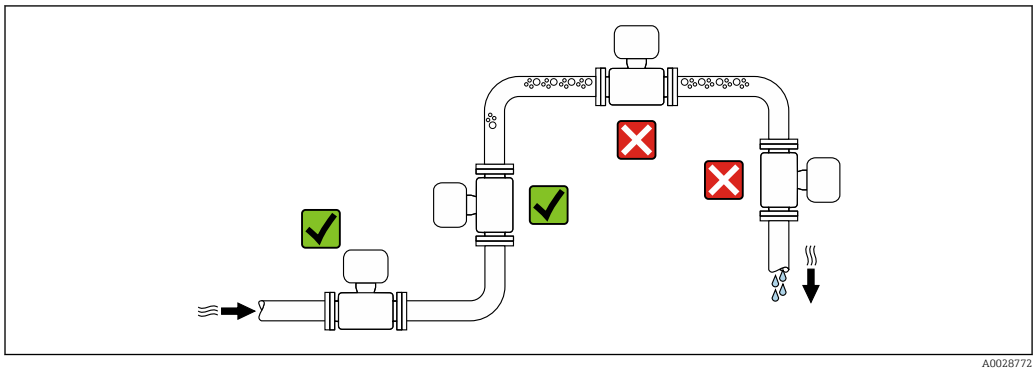

To prevent measuring errors arising from accumulation of gas bubbles in the measuring tube, avoid the following mounting locations in the pipe:
- Highest point of a pipeline.
- Directly upstream of a free pipe outlet in a down pipe.

Orientation

The direction of the arrow on the sensor nameplate helps you to install the sensor according to the flow direction (direction of medium flow through the piping).

Orientation			Recommendation
A	Vertical orientation	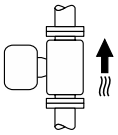 A0015591	✓✓
B	Horizontal orientation, transmitter head up	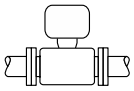 A0015589	✓✓ [1] Exceptions: → 5, 17
C	Horizontal orientation, transmitter head down	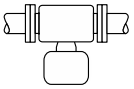 A0015590	✓✓ [2] Exceptions: → 5, 17
D	Horizontal orientation, transmitter head at side	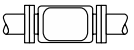 A0015592	✗

1) Applications with low process temperatures may decrease the ambient temperature. To maintain the minimum ambient temperature for the transmitter, this orientation is recommended.
2) Applications with high process temperatures may increase the ambient temperature. To maintain the maximum ambient temperature for the transmitter, this orientation is recommended.

If a sensor is installed horizontally with a curved measuring tube, match the position of the sensor to the fluid properties.

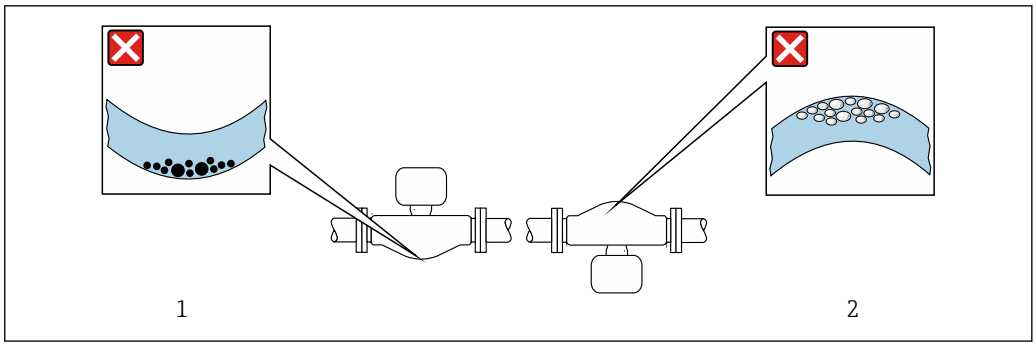

5 *Orientation of sensor with curved measuring tube*

1 Avoid this orientation for fluids with entrained solids: Risk of solids accumulating.
2 Avoid this orientation for outgassing fluids: Risk of gas accumulating.

Inlet and outlet runs

No special precautions need to be taken for fittings which create turbulence, such as valves, elbows or T-pieces, as long as no cavitation occurs .

Special mounting instructions

Zero point adjustment

All measuring devices are calibrated in accordance with state-of-the-art technology. Calibration takes place under reference conditions → 13. Therefore, a zero point adjustment in the field is generally not required.

Experience shows that zero point adjustment is advisable only in special cases:
- To achieve maximum measuring accuracy even with low flow rates
- Under extreme process or operating conditions (e.g. very high process temperatures or very high-viscosity fluids).

Mounting Safety Barrier Promass 100

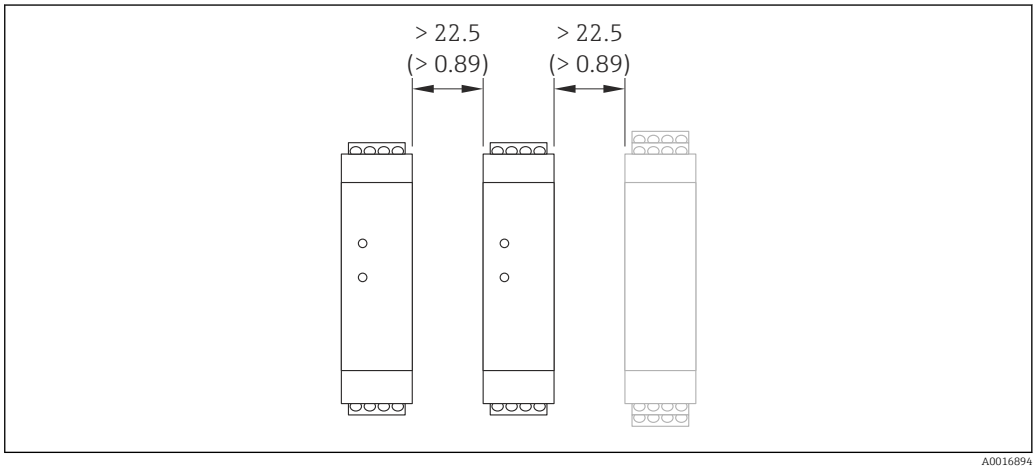

6 *Minimum distance between additional Safety Barrier Promass 100 or other modules.Engineering unit mm (in)*

Environment

Ambient temperature range

Measuring device	–40 to +60 °C (–40 to +140 °F)
Safety Barrier Promass 100	–40 to +60 °C (–40 to +140 °F)

▶ If operating outdoors:
Avoid direct sunlight, particularly in warm climatic regions.

Temperature tables

In the following tables, the following interdependencies between the maximum medium temperature T_m for T6 to T1 and the maximum ambient temperature T_a apply when operating the device in hazardous areas.

Ex ia, $_{C}CSA_{US}$ IS

SI units

Order code for "Housing"	T_a [°C]	T6 [85 °C]	T5 [100 °C]	T4 [135 °C]	T3 [200 °C]	T2 [300 °C]	T1 [450 °C]
Option A "Compact coated alu"	35	50	85	120	150	150	150
	50	–	85	120	150	150	150
	60	–	–	120	150	150	150

US units

Order code for "Housing"	T_a [°F]	T6 [185 °F]	T5 [212 °F]	T4 [275 °F]	T3 [392 °F]	T2 [572 °F]	T1 [842 °F]
Option A "Compact coated alu"	95	122	185	248	302	302	302
	122	–	185	248	302	302	302
	140	–	–	248	302	302	302

Explosion hazards arising from gas and dust

Determining the temperature class and surface temperature with the temperature table

- In the case of gas: Determine the temperature class as a function of the ambient temperature T_a and the medium temperature T_m.
- In the case of dust: Determine the maximum surface temperature as a function of the maximum ambient temperature T_a and the maximum medium temperature T_m.

Example

- Measured maximum ambient temperature: T_{ma} = 47 °C
- Measured maximum medium temperature: T_{mm} = 108 °C

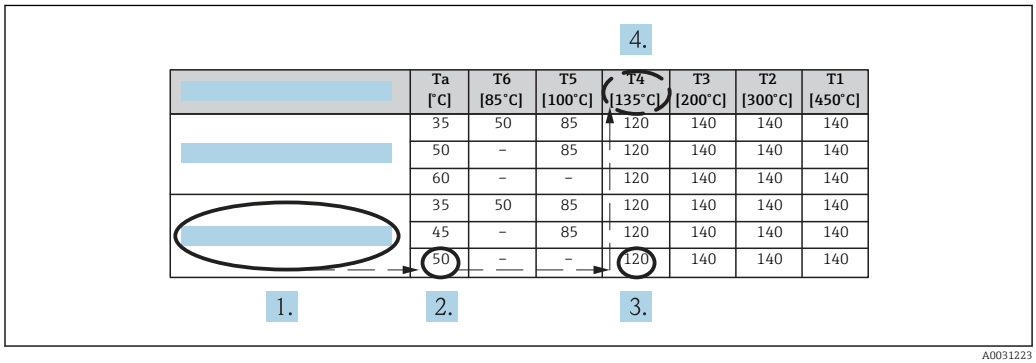

7 *Procedure for determining the maximum surface temperature*

1. Select device (optional).
2. In the column for the maximum ambient temperature T_a select the temperature that is immediately greater than or equal to the measured maximum ambient temperature T_{ma} that is present.
   ↳ T_a = 50 °C.
   The row showing the maximum medium temperature is determined.
3. Select the maximum medium temperature T_m of this row, which is larger or equal to the measured maximum medium temperature T_{mm}.
   ↳ The column with the temperature class for gas is determined: 108 °C ≤ 120°C → T4.

4. The maximum temperature of the temperature class determined corresponds to the maximum surface temperature for dust: T4 = 135 °C

Storage temperature	−40 to +60 °C (−40 to +140 °F)
Climate class	DIN EN 60068-2-38 (test Z/AD)
Degree of protection	**Transmitter and sensor** ▪ As standard: IP66/67, type 4X enclosure ▪ When housing is open: IP20, type 1 enclosure ▪ Display module: IP20, type 1 enclosure **Safety Barrier Promass 100** IP20
Vibration resistance	▪ Vibration, sinusoidal according to IEC 60068-2-6 – 2 to 8.4 Hz, 3.5 mm peak – 8.4 to 2 000 Hz, 1 g peak ▪ Vibration broad-band random, according to IEC 60068-2-64 – 10 to 200 Hz, 0.003 g^2/Hz – 200 to 2 000 Hz, 0.001 g^2/Hz – Total: 1.54 g rms
Shock resistance	Shock, half-sine according to IEC 60068-2-27 6 ms 30 g
Shock resistance	Rough handling shocks according to IEC 60068-2-31
Electromagnetic compatibility (EMC)	▪ Depends on the communication protocol: – HART, PROFIBUS DP, Modbus RS485, EtherNet/IP: As per IEC/EN 61326 and NAMUR Recommendation 21 (NE 21) – PROFINET: as per IEC/EN 61326 ▪ Complies with emission limits for industry as per EN 55011 (Class A) For details, refer to the Declaration of Conformity.

Process

Medium temperature range	**Sensor** −50 to +125 °C (−58 to +257 °F) **Seals** No internal seals
Density	0 to 5 000 kg/m³ (0 to 312 lb/cf)
Pressure-temperature ratings	The following pressure/temperature diagrams apply to all pressure-bearing parts of the device and not just the process connection.

Flange according to EN 1092-1 (DIN 2501)

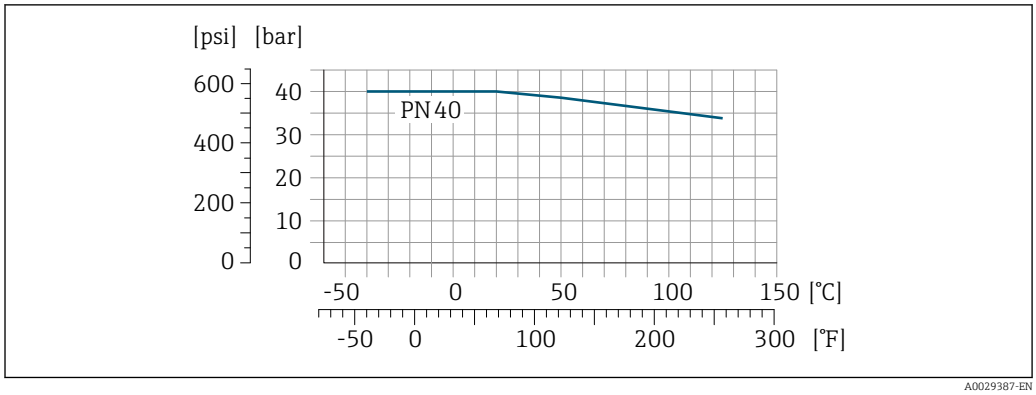

8 With flange material 1.4404 (F316/F316L)

Flange according to ASME B16.5

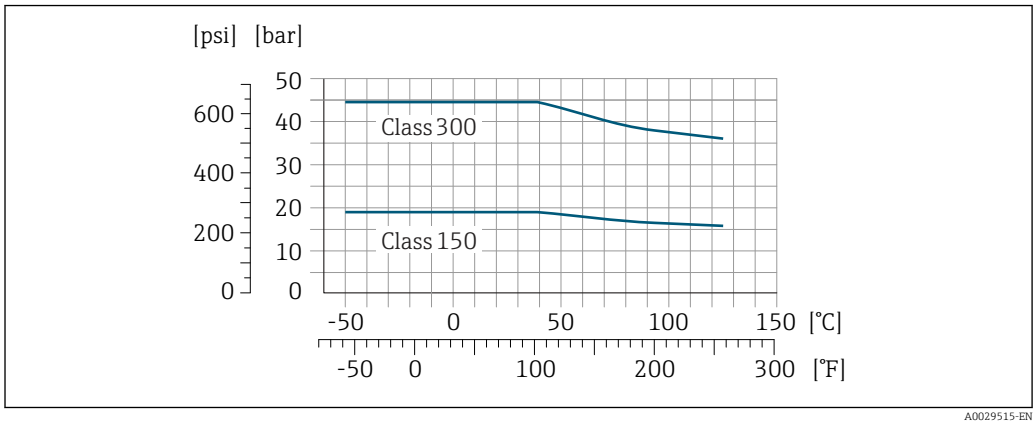

9 With flange material 1.4404 (F316/F316L)

Internal thread BSPP (G) according to ISO 228-1

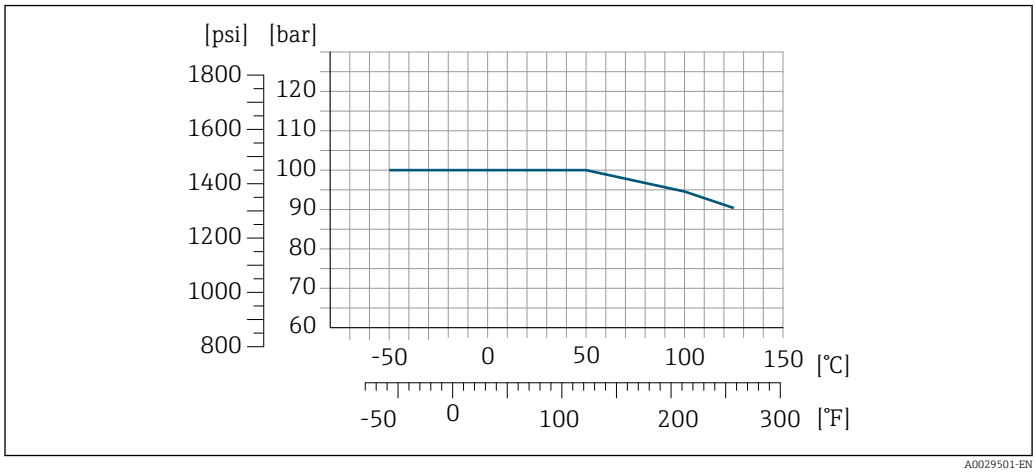

10 Process connection material: 1.4404 (316/316L)

Flow limit

Select the nominal diameter by optimizing between the required flow range and permissible pressure loss.

For an overview of the full scale values for the measuring range, see the "Measuring range" section → 6

- The minimum recommended full scale value is approx. 1/20 of the maximum full scale value
- In most applications, 20 to 50 % of the maximum full scale value can be considered ideal
- A low full scale value must be selected for abrasive media (such as liquids with entrained solids): flow velocity < 1 m/s (< 3 ft/s).

Pressure loss

To calculate the pressure loss, use the *Applicator* sizing tool → 31

Vibrations

The high oscillation frequency of the measuring tubes ensures that the correct operation of the measuring system is not influenced by plant vibrations.

Mechanical construction

Dimensions in SI units

Compact version

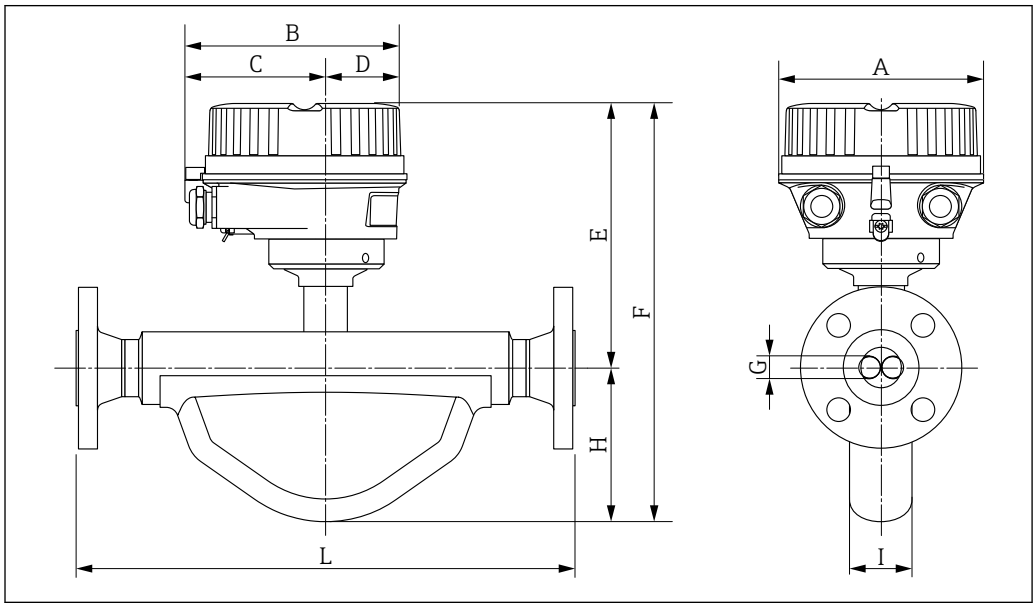

A0029467

Order code for "Housing", option A "Compact coated aluminum"

DN [mm]	A [mm]	B [mm]	C [mm]	D [mm]	E [mm]	F [mm]	G [mm]	H [mm]	I [mm]	L [mm]
8	136	147.5	93.5	54	177	266	3.87	89	40	1)
15	136	147.5	93.5	54	177	277	6.23	100	38	1)
25	136	147.5	93.5	54	174	276	8.80	102	48	1)
40	136	147.5	93.5	54	180	301	17.6	121	65	1)
50	136	147.5	93.5	54	195	371	26	176	96	1)

1) Dependent on the specific process connection

Flange connections

Fixed flange EN 1092-1, ASME B16.5, JIS B2220

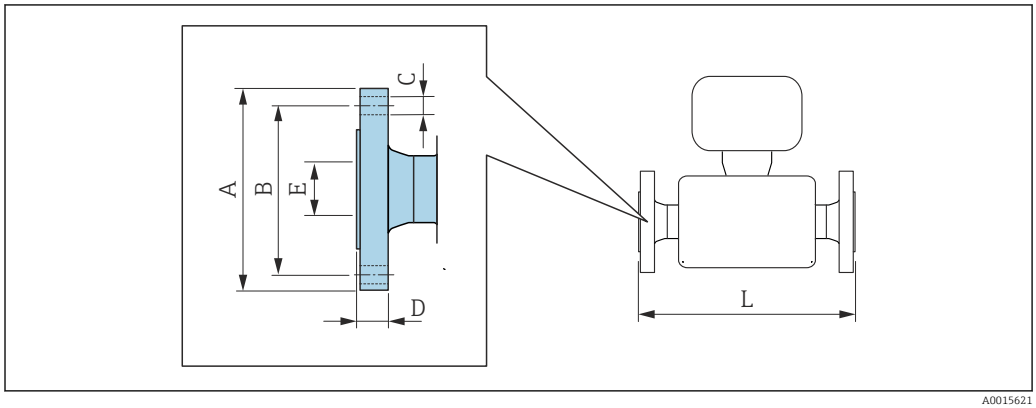

A0015621

11 Engineering unit mm (in)

Length tolerance for dimension L in mm:

Flange according to EN 1092-1 (DIN 2501): PN 40:
1.4404 (316/316L): *Order code for "Process connection", option* **D2S**

DN [mm]	A [mm]	B [mm]	C [mm]	D [mm]	E [mm]	L [mm]
8 [1]	95	65	4 × Ø14	16	17.3	232
15	95	65	4 × Ø14	16	17.3	279
25	115	85	4 × Ø14	18	28.5	329
40	150	110	4 × Ø18	18	43.1	445
50	165	125	4 × Ø18	20	54.5	556
Surface roughness (flange): EN 1092-1 Form B1 (DIN 2526 Form C), Ra 3.2 to 12.5 µm						

1) DN 8 with DN 15 flanges as standard

Flange according to ASME B16.5: Class 150
1.4404 (F316/F316L): *order code for "Process connection", option* **AAS**

DN [mm]	A [mm]	B [mm]	C [mm]	D [mm]	E [mm]	L [mm]
8 [1]	90	60.3	4 × Ø15.7	11.2	15.7	232
15	90	60.3	4 × Ø15.7	11.2	15.7	279
25	110	79.4	4 × Ø15.7	14.2	26.7	329
40	125	98.4	4 × Ø15.7	17.5	40.9	445
50	150	120.7	4 × Ø19.1	19.1	52.6	556
Surface roughness (flange): Ra 3.2 to 6.3 µm						

1) DN 8 with DN 15 flanges as standard

Flange according to ASME B16.5: Class 300
1.4404 (F316/F316L): *order code for "Process connection", option* **ABS**

DN [mm]	A [mm]	B [mm]	C [mm]	D [mm]	E [mm]	L [mm]
8 [1]	95	66.7	4 × Ø15.7	14.2	15.7	232
15	95	66.7	4 × Ø15.7	14.2	15.7	279
25	125	88.9	4 × Ø19.1	17.5	26.7	329
40	155	114.3	4 × Ø22.3	20.6	40.9	445
50	165	127	8 × Ø19.1	22.3	52.6	556
Surface roughness (flange): Ra 3.2 to 6.3 µm						

1) DN 8 with DN 15 flanges as standard

Cable glands

Internal thread according to ISO 228-1

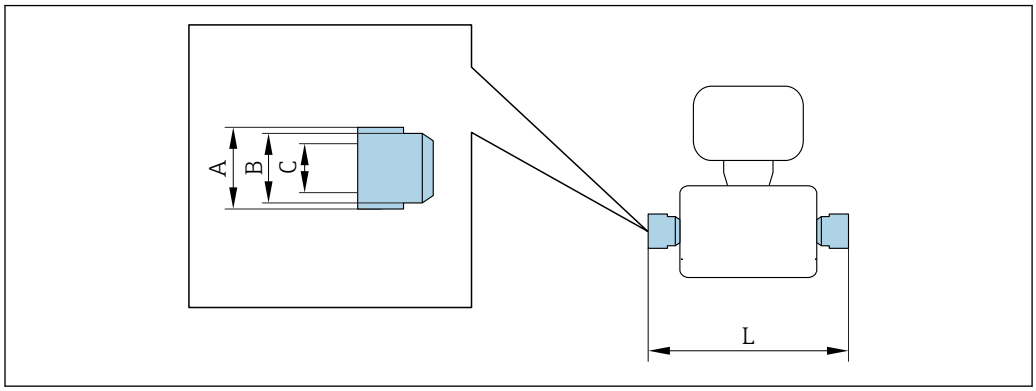

12 *Engineering unit mm (in)*

Length tolerance for dimension L in mm:

Cylindrical internal thread BSPP (G) in accordance with ISO 228-1 with sealing surfaces in accordance with DIN 3852-2/ISO 1179-1 **1.4404 (316/316L)** **G1/2"** *Order code for "Process connection", option* **G15** **G3/4"** *Order code for "Process connection", option* **G20** **G1/"** *Order code for "Process connection", option* **G25**				
DN [mm]	**A [mm]**	**B [mm]**	**C [in]**	**L [mm]**
8	32	AF 27	G ½	214
15	36	AF 32	G ¾	267
25	50	AF 44	G 1	316

Safety Barrier Promass 100

Top-hat rail EN 60715:
- TH 35 x 7.5
- TH 35 x 15

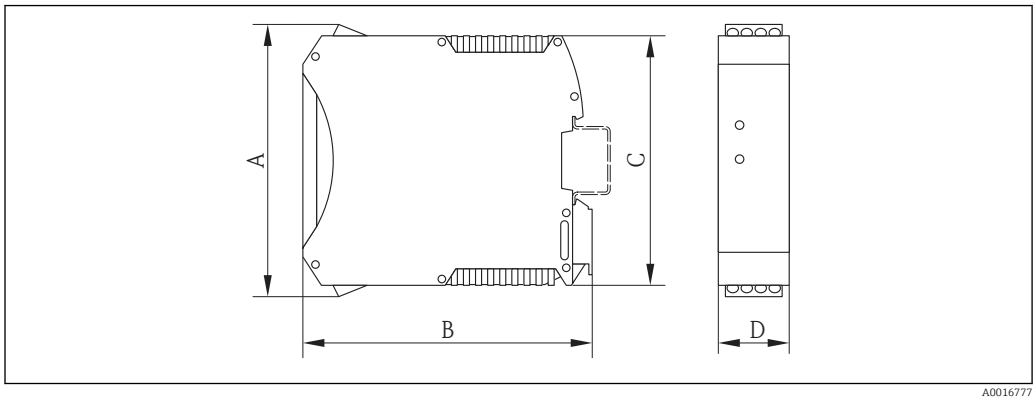

A	B	C	D
[mm]	**[mm]**	**[mm]**	**[mm]**
108	114.5	99	22.5

Dimensions in US units

Compact version

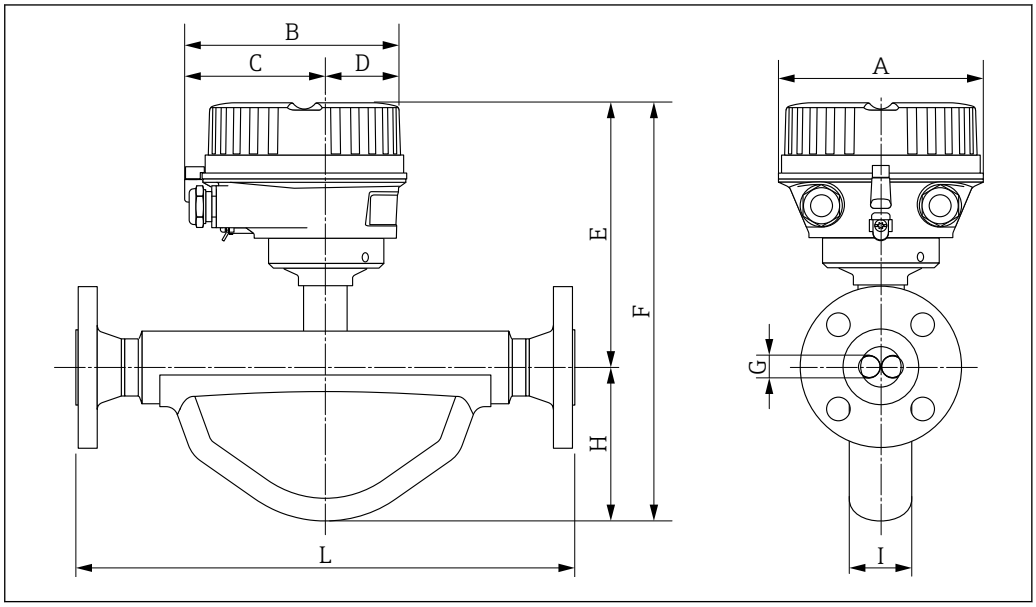

A0029467

Order code for "Housing", option A "Compact coated aluminum"

DN [in]	A [in]	B [in]	C [in]	D [in]	E [in]	F [in]	G [in]	H [in]	I [in]	L [in]
⅜	5.35	5.81	3.68	2.13	6.97	10.47	0.152	3.5	1.57	1)
½	5.35	5.81	3.68	2.13	6.97	10.91	0.245	3.94	1.5	1)
1	5.35	5.81	3.68	2.13	6.85	10.87	0.35	4.02	1.89	1)
1½	5.35	5.81	3.68	2.13	7.09	11.85	0.69	4.76	2.56	1)
2	5.35	5.81	3.68	2.13	7.68	14.61	1.02	6.93	3.78	1)

1) Dependent on the specific process connection

Flange connections

Fixed flange EN 1092-1, ASME B16.5, JIS B2220

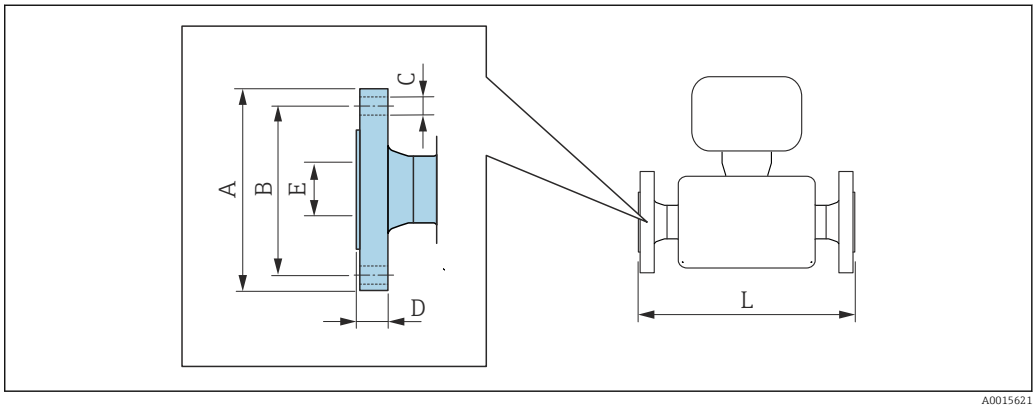

A0015621

13 *Engineering unit mm (in)*

Length tolerance for dimension L in inch:
+0.06 / −0.08

Flange according to ASME B16.5: Class 150 **1.4404 (F316/F316L):** *order code for "Process connection", option* **AAS**						
DN [in]	**A [in]**	**B [in]**	**C [in]**	**D [in]**	**E [in]**	**L [in]**
⅜ 1)	3.54	2.37	4 × Ø 0.62	0.44	0.62	9.13
½	3.54	2.37	4 × Ø0.62	0.44	0.62	10.98
1	4.33	3.13	4 × Ø0.62	0.56	1.05	12.95
1½	4.92	3.87	4 × Ø0.62	0.69	1.61	17.52
2	5.91	4.75	4 × Ø0.75	0.75	2.07	21.89
Surface roughness (flange): Ra 125 to 250 µin						

1) DN ⅜" with DN ½" flanges as standard

Flange according to ASME B16.5: Class 300 **1.4404 (F316/F316L):** *order code for "Process connection", option* **ABS**						
DN [in]	**A [in]**	**B [in]**	**C [in]**	**D [in]**	**E [in]**	**L [in]**
⅜ 1)	3.74	2.63	4 × Ø0.62	0.56	0.62	9.13
½	3.74	2.63	4 × Ø0.62	0.56	0.62	10.98
1	4.92	3.50	4 × Ø0.75	0.69	1.05	12.95
1½	6.10	4.50	4 × Ø0.88	0.81	1.61	17.52
2	6.50	5.00	8 × Ø0.75	0.88	2.07	21.89
Surface roughness (flange): Ra 125 to 250 µin						

1) DN ⅜" with DN ½" flanges as standard

Cable glands

Internal thread according to ISO 228-1

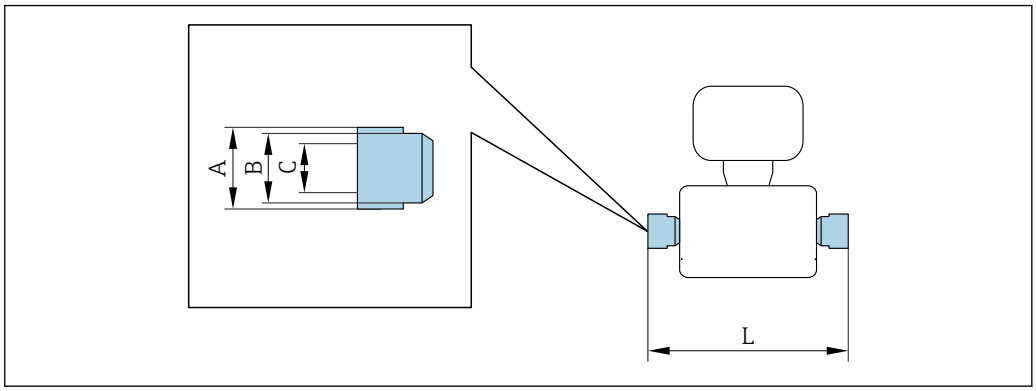

14 *Engineering unit mm (in)*

Length tolerance for dimension L in inch:
+0.06 / −0.08

Cylindrical internal thread BSPP (G) in accordance with ISO 228-1 with sealing surfaces in accordance with DIN 3852-2/ISO 1179-1 **1.4404 (316/316L)** **G1/2"** *Order code for "Process connection", option* **G15** **G3/4"** *Order code for "Process connection", option* **G20** **G1/"** *Order code for "Process connection", option* **G25**				
DN [in]	**A [in]**	**B [mm]**	**C [in]**	**L [in]**
⅜	1.26	AF 27	G ½	8.43
½	1.42	AF 32	G ¾	10.51
1	1.97	AF 44	G 1	12.44

Safety Barrier Promass 100

Top-hat rail EN 60715:
- TH 35 x 7.5
- TH 35 x 15

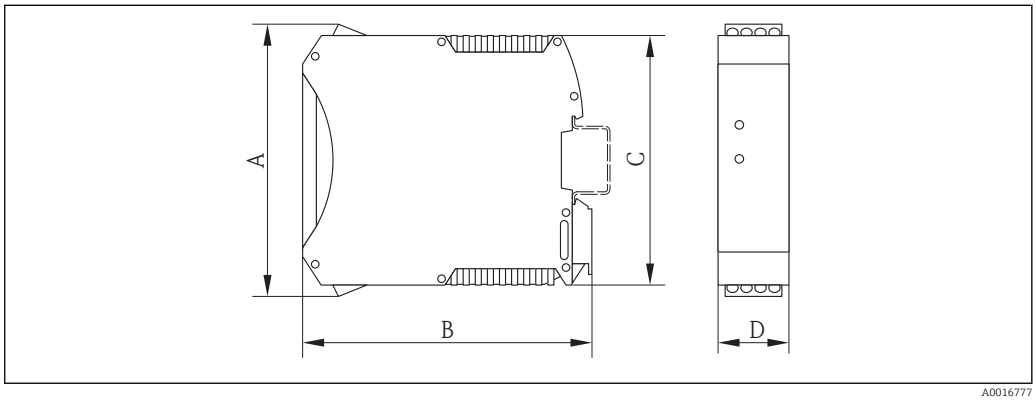

A		B		C		D	
[mm]	**[in]**	**[mm]**	**[in]**	**[mm]**	**[in]**	**[mm]**	**[in]**
108	4.25	114.5	4.51	99	3.9	22.5	0.89

Weight

All values (weight) refer to devices with EN/DIN PN 40 flanges.

Weight in SI units

DN [mm]	Weight [kg]
8	4.5
15	4.8
25	6.4
40	10.4
50	15.5

Weight in US units

DN [in]	Weight [lbs]
⅜	10
½	11
1	14
1 ½	23
2	34

Safety Barrier Promass 100

49 g (1.73 ounce)

Materials

Transmitter housing

Order code for "Housing", option **A** "Compact, aluminum coated":
Aluminum, AlSi10Mg, coated

Cable entries/cable glands

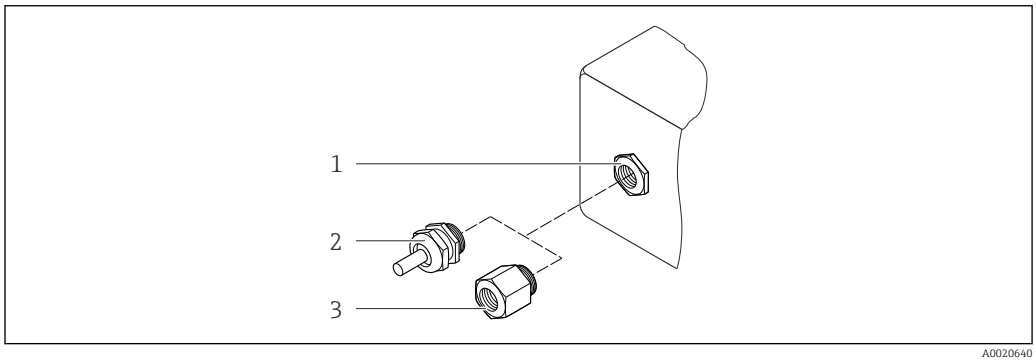

15 Possible cable entries/cable glands

1 Cable entry with M20 × 1.5 internal thread
2 Cable gland M20 × 1.5
3 Adapter for cable entry with internal thread G ½" or NPT ½"

Order code for "Housing", option A "Compact, coated aluminum"

The various cable entries are suitable for hazardous and non-hazardous areas.

Cable entry/cable gland	Material
Cable gland M20 × 1.5	Nickel-plated brass
Adapter for cable entry with internal thread G ½"	
Adapter for cable entry with internal thread NPT ½"	

Sensor housing

- Acid and alkali-resistant outer surface
- Stainless steel 1.4301 (304)

Measuring tubes

Stainless steel, 1.4539 (904L); manifold: stainless steel, 1.4404 (316/316L)

Process connections

For all process connections:
Stainless steel, 1.4404 (316/316L)

List of all available process connections → 29

Seals

Welded process connections without internal seals

Safety Barrier Promass 100

Housing: Polyamide

Process connections

- Fixed flange connections:
  - EN 1092-1 (DIN 2501) flange
  - EN 1092-1 (DIN 2512N) flange
  - ASME B16.5 flange
- Internal thread
  Cylindrical internal thread BSPP (G) in accordance with ISO 228-1 with sealing surfaces in accordance with DIN 3852-2/ISO 1179-1

For information on the different materials used in the process connections → 29

Surface roughness

All data relate to parts in contact with fluid.
- Not polished
- Ra_{max} = 0.8 µm (32 µin)

Operability

Operating concept

Operator-oriented menu structure for user-specific tasks
- Commissioning
- Operation
- Diagnostics
- Expert level

Quick and safe commissioning
- Individual menus for applications
- Menu guidance with brief explanations of the individual parameter functions

Reliable operation
Operation in the following languages:
Via "FieldCare", "DeviceCare" operating tool:
English, German

Efficient diagnostics increase measurement availability
- Troubleshooting measures can be called up via the operating tools
- Diverse simulation options
- Status indicated by several light emitting diodes (LEDs) on the electronic module in the housing compartment

Service interface

Via service interface (CDI)

This communication interface is present in the following device version:
Order code for "Output", option **M**: Modbus RS485

Modbus RS485

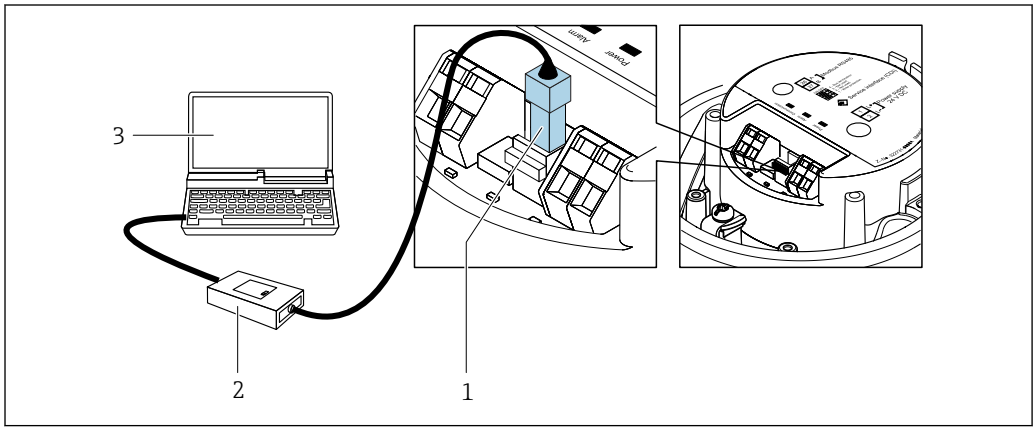

1 Service interface (CDI) of measuring device
2 Commubox FXA291
3 Computer with "FieldCare" operating tool with COM DTM "CDI Communication FXA291"

Certificates and approvals

CE mark

The measuring system is in conformity with the statutory requirements of the applicable EU Directives. These are listed in the corresponding EU Declaration of Conformity along with the standards applied.

Endress+Hauser confirms successful testing of the device by affixing to it the CE mark.

C-Tick symbol

The measuring system meets the EMC requirements of the "Australian Communications and Media Authority (ACMA)".

Ex approval

The measuring device is certified for use in hazardous areas and the relevant safety instructions are provided in the separate "Safety Instructions" (XA) document. Reference is made to this document on the nameplate.

The separate Ex documentation (XA) containing all the relevant explosion protection data is available from your Endress+Hauser sales center.

ATEX/IECEx

Currently, the following versions for use in hazardous areas are available:

Ex ia

Category (ATEX)	Type of protection
II2G	Ex ia IIC T6...T1 Gb
II1/2G, II2D	Ex ia IIC T6...T1 Ga/Gb Ex tb IIIC Txx °C Db
II2G, II2D	Ex ia IIC T6...T1 Gb Ex tb IIIC Txx °C Db

$_{C}CSA_{US}$

Currently, the following versions for use in hazardous areas are available:

IS (Ex i)
- Class I Division 1 Groups ABCD
- Class II Division 1 Groups EFG and Class III

Modbus RS485 certification

The measuring device meets all the requirements of the MODBUS/TCP conformity test and has the "MODBUS/TCP Conformance Test Policy, Version 2.0". The measuring device has successfully passed all the test procedures carried out.

Measuring instrument approval

The measuring device is (optionally) approved as a gas meter (MI-002) or component in measuring systems (MI-005) in service subject to legal metrological control in accordance with the European Measuring Instruments Directive 2014/32/EU (MID).

The measuring device is qualified to OIML R117 and has an OIML Certificate of Conformity (optional).

Ordering information

Detailed ordering information is available from the following sources:
- In the Product Configurator on the Endress+Hauser website: www.endress.com -> Click "Corporate" -> Select your country -> Click "Products" -> Select the product using the filters and search field -> Open product page -> The "Configure" button to the right of the product image opens the Product Configurator.
- From your Endress+Hauser Sales Center: www.addresses.endress.com

Product Configurator - the tool for individual product configuration
- Up-to-the-minute configuration data
- Depending on the device: Direct input of measuring point-specific information such as measuring range or operating language
- Automatic verification of exclusion criteria
- Automatic creation of the order code and its breakdown in PDF or Excel output format
- Ability to order directly in the Endress+Hauser Online Shop

Accessories

Various accessories, which can be ordered with the device or subsequently from Endress+Hauser, are available for the device. Detailed information on the order code in question is available from your local Endress+Hauser sales center or on the product page of the Endress+Hauser website: www.endress.com.

Service-specific accessories

Accessories	Description
Applicator	Software for selecting and sizing Endress+Hauser measuring devices: ▪ Choice of measuring devices for industrial requirements ▪ Calculation of all the necessary data for identifying the optimum flowmeter: e.g. nominal diameter, pressure loss, flow velocity and accuracy. ▪ Graphic illustration of the calculation results ▪ Determination of the partial order code, administration, documentation and access to all project-related data and parameters over the entire life cycle of a project. Applicator is available: ▪ Via the Internet: https://wapps.endress.com/applicator ▪ As a downloadable DVD for local PC installation.

W@M	W@M Life Cycle Management Improved productivity with information at your fingertips. Data relevant to a plant and its components is generated from the first stages of planning and during the asset's complete life cycle. W@M Life Cycle Management is an open and flexible information platform with online and on-site tools. Instant access for your staff to current, in-depth data shortens your plant's engineering time, speeds up procurement processes and increases plant uptime. Combined with the right services, W@M Life Cycle Management boosts productivity in every phase. For more information, visit www.endress.com/lifecyclemanagement
FieldCare	FDT-based plant asset management tool from Endress+Hauser. It can configure all smart field units in your system and helps you manage them. By using the status information, it is also a simple but effective way of checking their status and condition. For details, see Operating Instructions BA00027S and BA00059S
DeviceCare	Tool for connecting and configuring Endress+Hauser field devices. For details, see Innovation brochure IN01047S
Commubox FXA291	Connects Endress+Hauser field devices with a CDI interface (= Endress+Hauser Common Data Interface) and the USB port of a computer or laptop. For details, see "Technical Information" TI00405C

Supplementary documentation

For an overview of the scope of the associated Technical Documentation, refer to the following:
- The *W@M Device Viewer* : Enter the serial number from the nameplate (www.endress.com/deviceviewer)
- The *Endress+Hauser Operations App*: Enter the serial number from the nameplate or scan the 2-D matrix code (QR code) on the nameplate.

Standard documentation

Brief Operating Instructions

Measuring device	Documentation code
LPGmass	KA01242

Operating Instructions

Measuring device	Documentation code
LPGmass	BA01316D

Description of device parameters

Measuring device	Documentation code
LPGmass	GP01093D

Supplementary device-dependent documentation

Safety Instructions

Contents	Documentation code
ATEX/IECEx Ex i	XA01323
cCSAus IS	XA01411

Special documentation

Contents	Documentation code
Information on Custody Transfer Measurement	SD01758D

Installation Instructions

Contents	Documentation code
Installation Instructions for spare part sets	Specified for each individual accessory

Registered trademarks

Modbus®
Registered trademark of SCHNEIDER AUTOMATION, INC.

Microsoft®
Registered trademark of the Microsoft Corporation, Redmond, Washington, USA

www.addresses.endress.com

Endress+Hauser

People for Process Automation