FLOWSIC500

High performance flow measurement for a digital gas distribution network

Custody transfer measurement in natural gas distribution

- Ability to digitize the gas network
- Unique remote gas network monitoring based on i-diagnostics™
- Ultimate measurement certainty and safety of continuous gas supply
- Simple installation, compatible with conventional technologies (turbine and rotary meters)
- All-in-one solution: gas flow meter + volume correction + data registration + data communication
- Autarkic operation or failsafe network operation with battery backup
- Reduced maintenance effort thanks to remote maintenance
- Simplified recalibration through straightforward "cartridge exchange"



Endress+Hauser

People for Process Automation

Into the digital age with ultrasound

The world is becoming ever more networked and digitalization offers new opportunities, including in the energy sector. Managing the challenging energy revolution is a global concern in this area. A large number of possibilities for modernizing company-internal processes exist, however.

The digital transformation is driving technological developments thereby providing new measurement techniques and services even for more efficient and intelligent processes. Our gas flow meters make a digital transformation of the gas network possible. After releasing the FLOWSIC500, the world's first ultrasonic gas flow meter for natural gas distribution, we have taken the next innovative step with our second generation device, which is setting new standards in connectivity and transparency.





MORE VALUE

The advantages that characterized the previous version continue to be available: FLOWSIC500 is a gas flow meter and volume corrector in one – and it is virtually wear and tear and maintenance-free thanks to the absence of mechanically moving components.

Six powerful features support you on your path to the digital future of flow measurement.



Reduced costs thanks to absence of mechanically-moving components

FLOWSIC500 measures the gas flow using ultrasound, which makes the device virtually wear and tear and maintenance-free in use.

Low operating costs due to high measurement certainty and accuracy

Besides its low wear and tear characteristics, the lack of susceptibility of the FLOWSIC500 to interference ensures long-term stable measurement certainty and therefore low operating costs.



Time and cost savings thanks to remote control

Digital interfaces and wireless communication enable the FLOWSIC500 to be integrated perfectly into high-level control systems.

Full transparency through digital transformation of the gas network

FLOWSIC500 takes the gas distribution network into the digital age. Its i-diagnostics™ function provides real-time monitoring of the gas quality, which makes it possible to increase the system performance through optimization of the network balance.

Compact design saves space

FLOWSIC500 operates without straight inlet and outlet piping requirements. Equipped with an integrated volume corrector, it requires considerably less space than conventional solutions.

Perfect fit

The construction of the FLOWSIC500 enables it to be effortlessly mounted anywhere where a conventional gas flow meter was previously installed.

Digital remote control and fleet monitoring in real time

With its extensive and state-of-the-art communication options, FLOWSIC500 is optimally equipped for the digital age. The modern digital interfaces and the option of wireless communication via the 4G / 5G mobile telecommunication standard make it easy to integrate into higher-level control systems. The remote control feature offers significant time and cost advantages.

It enables all deployed devices to be monitored remotely from a control station using a real-time fleet control system.

Continuous monitoring provides a transparent picture of the current device status thereby allowing condition-based maintenance. This eliminates any unnecessary on-site maintenance checks.



Gas Quality Indicator (GQI)

The modern gas market is characterized by the presence of a large number of different gas suppliers. With the FLOWSIC500, plant and network operators are prepared for this challenge because the Gas Quality Indicator allows the hydrogen content in the natural gas to be monitored. If the configured limit value is exceeded due to fluctuations in the gas qualities, the FLOWSIC500 reports this automatically to a control center. This enables changes in the hydrogen content and therefore also the heating value to be detected in real time and substantial savings in time and costs to be achieved.

The Gas Quality Indicator, which is based on the i-diagnostic™ technology, assists in optimizing the network balance. It thereby makes a significant contribution to guaranteeing the contractually agreed gas qualities when measuring the gas quality using a gas chromatograph or measuring the hydrogen content is not possible.

H_2READY

Measuring capability up to 30% hydrogen in the natural gas

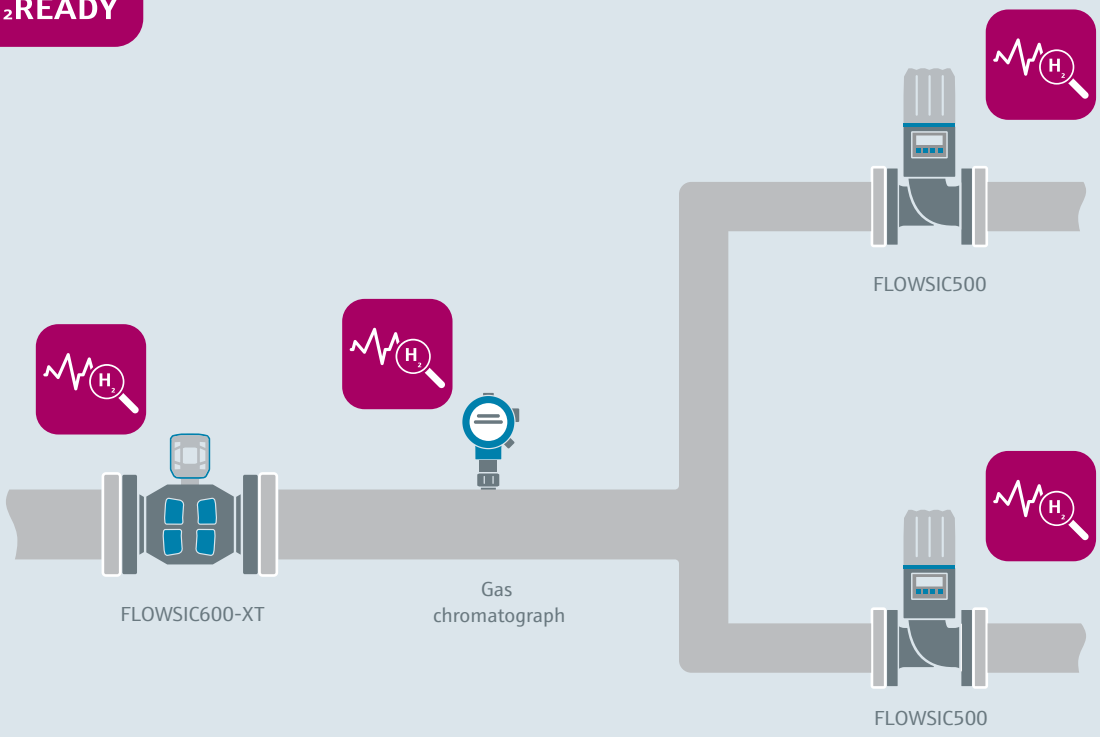

Four nominal diameters – and all easy to operate

- We offer the FLOWSIC500 in four nominal diameters, all fitting the common flange-to-flange dimensions used in natural gas distribution: DN50 (2"), DN80 (3"), DN100 (4") and DN150 (6").
- The electrical connections for the transfer of measurement data and voltage supply are easily accessible and installed in just a few steps. The measuring components are installed in a “cartridge” that can be removed in just a few steps.
- The gas flow meter can be installed either horizontally or vertically, and the display rotated to make meter reading easier.
- The most important functions of the measurement device can be accessed directly from the display using the key pad. The user-friendly FLOWgate™ software supports FLOWSIC500 via an optical interface.



Meter size: DN50 / 2"



Meter size: DN80 / 3"



Meter size: DN100 / 4"



Meter size: DN150 / 6 "

Principle of operation

- Thanks to the use of ultrasound technology and the absence of mechanical components, the FLOWSIC500 offers clear cost advantages over conventional turbine and rotary displacement meters.
- The gas flow meter works without any loss of performance during operation. No part of the measurement device interferes with the gas flow. The FLOWSIC500 can therefore also be used in applications where a continuous gas supply is vital, for example in hospitals.
- In the event of a fault, e.g., a change in the performance of the electronic components or in case of contamination, the device issues an alarm via its self-monitoring feature. This eliminates the need for regular maintenance.
- Furthermore, being insensitive to excessive loads, the gas flow meter offers a broad measurement range and also processes dynamic load changes with no loss in accuracy. The FLOWSIC500 is therefore ideal for custody gas flow measurements.

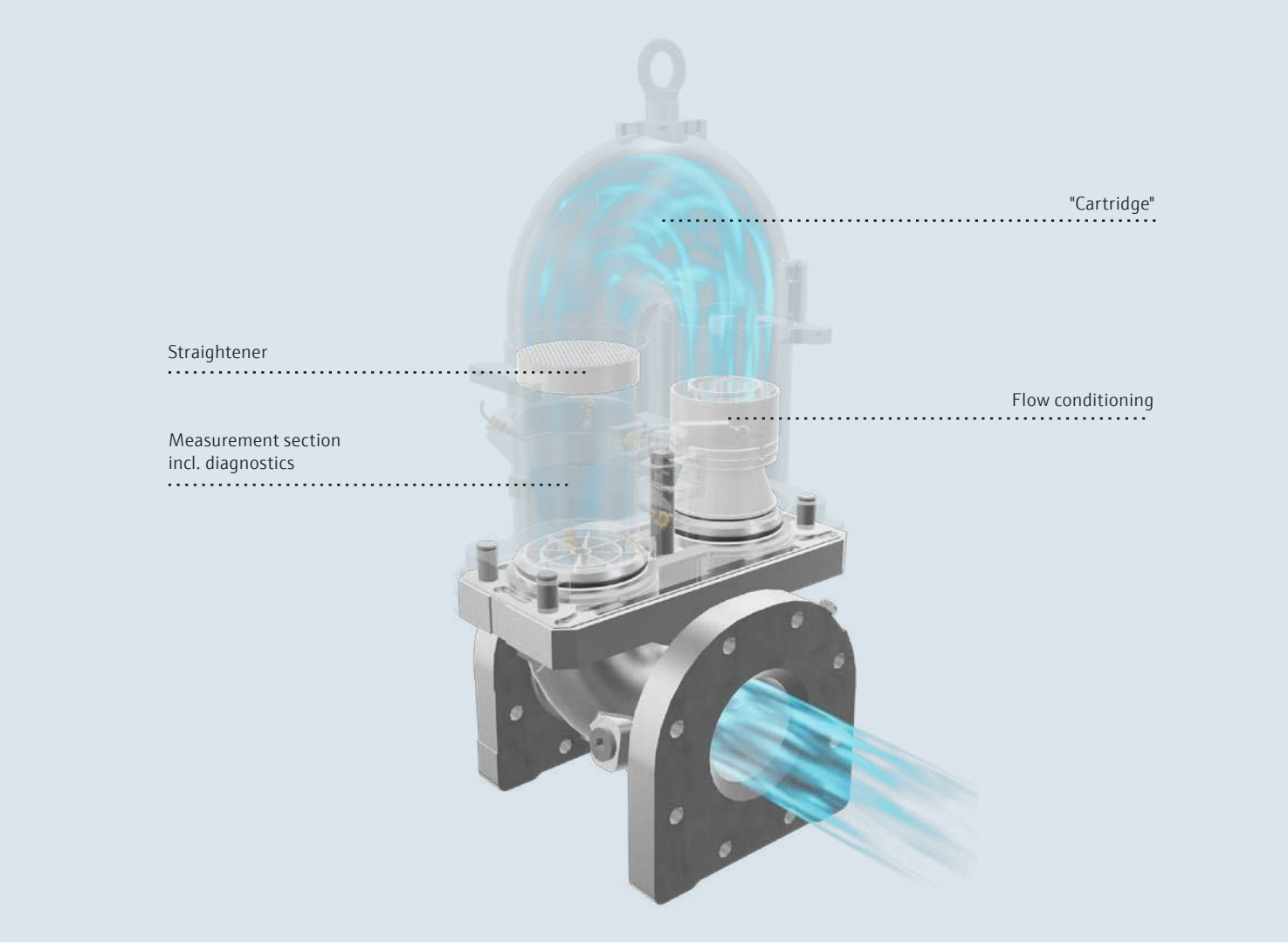

Gas flow meter, volume corrector, and load recording – all in one

- Gas flow measurement and volume correction have the same goal: providing a precise measurement of the quantity of gas supplied. The FLOWSIC500 combines all functions into one device thereby helping to save on installation costs and reducing the number of interfaces. Everything is conveniently available from a single source, with the same end result: precise and reliable measurement of the gas quantity in line with recognized, approved processes.
- The integratable volume corrector supports all typical correction algorithms, such as SGERG88, AGA 8, and AGA NX-19.
- There is the option of TZ or pTZ correction. The pTZ variant approved in accordance with MID. The meter always comes with suitable temperature and pressure sensors. A wide-range pressure sensor covers the range from 0.8... 20 bar(a) (12 ... 290 psi(a)).
- FLOWSIC500 now incorporates not only a volume corrector function but also load recording and indicating device for the maximum load. The technology of the innovative ultrasonic gas meter makes this possible. Install once, operate once – complete solution. Any kind of modem can be connected to implement the digital data transmission.

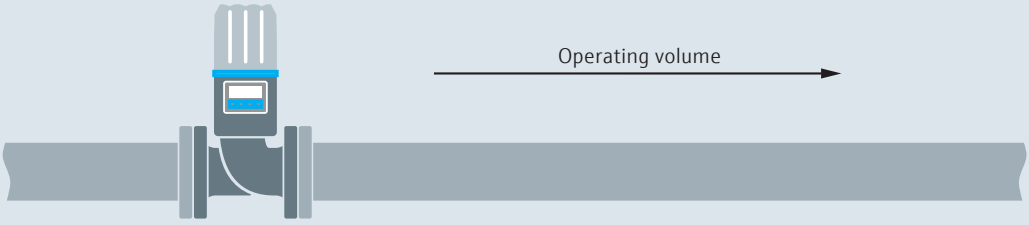

Simply an outstanding gas flow meter



Gas flow meter with volume corrector and external p/T sensor



Gas flow meter with volume corrector and internal p/T sensor

FLOWgate™ operating software

- The FLOWgate™ user software offers a user-friendly and results-oriented solution for all life cycle management tasks of the FLOWSIC500.
- FLOWgate™, with its wizards for calibration, commissioning and device diagnostics, supports the almost maintenance-free operation of the gas flow meter and can also be used to remotely monitor the gas flow meter.
- The Device Manager shows all registered devices, and offers device grouping and a convenient data backup function. Thanks to the integrated database you can access the stored data anytime offline or online.
- The intuitive operation and multi-language support of FLOWgate™ makes the FLOWSIC500 gas flow meter easy to use.

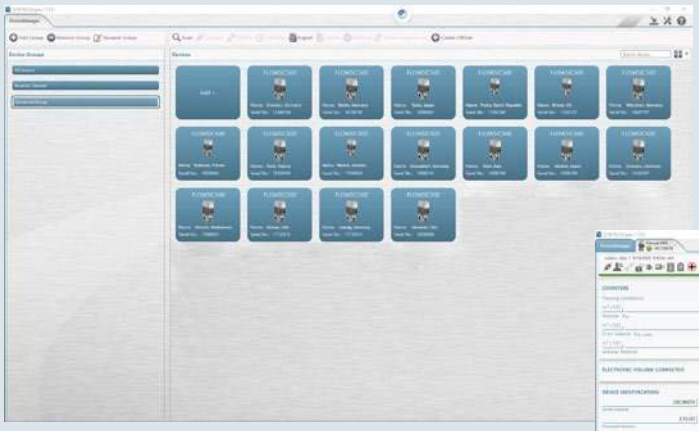

Device Manager

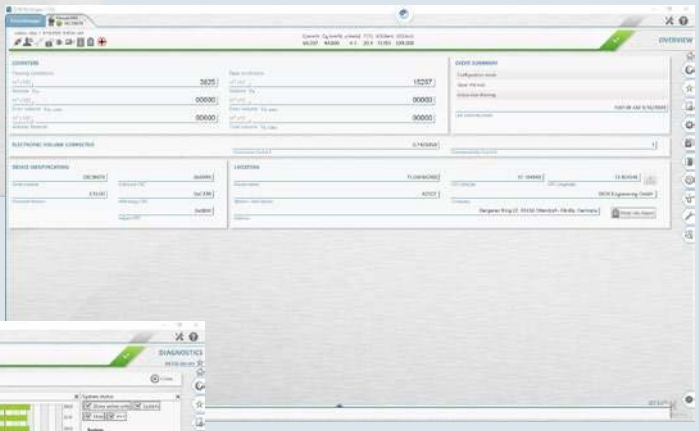

Overview



Meter values

FLOWSIC500: custody transfer measurement in natural gas distribution



Product Description

The cutting-edge technology for the ultimate in measurement accuracy: The FLOWSIC500 ultrasonic compact gas meter ensures highly accurate metering in natural gas distribution. In absence of mechanical moving parts, the FLOWSIC500 is a rugged, reliable, and low-maintenance device – allowing for a significant reduction in operating costs. It is overload-proof, accurate and is monitored by an intelligent diagnostics system.

The modern interfaces and the option of wireless communication make it easy to integrate into remote data management systems. Continuous monitoring provides a transparent picture of the current device status as well as changes in the gas quality. When used in transfer stations and measuring stations, the FLOWSIC500 provides the security of a continuous and blockage-free gas supply.

At a glance

- Rugged and time-proven technology: ultrasound technology
- Diagnostics and continuous operational checks
- Measuring capability up to 30% H_2 in the natural gas
- Gas Quality Indicator for quantifying the H_2 content
- Integrated volume conversion and load recording
- No straight inlet/outlet piping required
- Large measuring span, no moving parts
- Extended interfaces and protocols
- Remote communication (DATCOM)

Your benefits

- Ability to digitize the gas network
- Unique remote gas network monitoring based on i-diagnostics™
- Ultimate measurement certainty and safety of continuous gas supply
- Simple installation, compatible with conventional technologies (turbine and rotary meters)
- All-in-one solution: gas flow meter + volume correction + data registration + data communication (DATCOM)
- Autarkic operation or fail-safe network operation with battery backup
- Reduced maintenance effort thanks to remote maintenance
- Simplified recalibration through straightforward “cartridge exchange”

Fields of application

- Natural gas distribution
- Metering stations in industrial and commercial applications
- Building and area metering for municipal and regional gas suppliers
- Critical applications where a continuous gas supply must be ensured, e.g., in hospitals
- Natural gas measurement; complies with all applicable directives and guidelines

More Information online

For more information, enter the link or scan the QR code to get direct access to technical data, operating instructions, software, application examples, and much more.
www.endress.com/flowsic500

Technical data

The precise device specifications and product performance data may vary and are dependent on the respective application and customer specifications.

FLOWSIC500

Measured values	Volume a.c., volume flow a.c., gas velocity In addition, for integrated volume correction: volume s.c., volume flow s.c.
Measurement principle	Ultrasonic transit time difference measurement
Measuring medium	Natural gas (dry, odorized), natural gas containing up to 30% hydrogen
Measuring ranges	
Volume flow, a. c., DN 50 (2")	1.0 ... 160 m^3/h (35 ft^3/h ... 5,650 ft^3/h)
Volume flow, a. c., DN 80 (3")	2.5 ... 400 m^3/h (88 ft^3/h ... 14,125 ft^3/h)
Volume flow, a. c., DN 100 (4")	4.0 ... 650 m^3/h (141 ft^3/h ... 22,954 ft^3/h)
Volume flow, a. c., DN 150 (6")	4.0 ... 1,000 m^3/h (141 ft^3/h ... 35,314 ft^3/h)
Repeatability	≤ 0.1%
Accuracy	Accuracy class 1; typical error limits
Q_{min} up to 0.1 Q_{max}	≤ ± 1%
0.1 Q_{max} up to Q_{max}	≤ ± 0.5%
	Accuracy class 1; maximum allowed error limits
Q_{min} up to 0.1 Q_{max}	≤ ± 2%
0.1 Q_{max} up to Q_{max}	≤ ± 1%
	After high pressure flow calibration: ± 0.2% at test pressure, otherwise ± 0.5%
Diagnostic functions	Permanent monitoring of measured values, Gas Quality Indicator
Gas temperature	–25 °C ... +60 °C (–13 °F ... +140 °F) –40 °C ... +70 °C (–40 °F ... +158 °F) (optional)
Operating pressure	PN16 (EN 1092-1): 0 bar(g) ... 16 bar(g) (0 psi(g) ... 232 psi(g)) Class 150 (ASME B16.5): 0 bar(g) ... 20 bar(g) (0 psi(g) ... 290 psi(g))
Ambient temperature	–25 °C ... +60 °C (–13 °F ... +140 °F) –40 °C ... +70 °C (–40 °F ... +158 °F) (optional)
Storage temperature	–40 °C ... +80 °C (–40 °F ... +176 °F)
Conformities	MID: 2014/32 / EU OIML R 137-1&2:2012 EN 12405: 2010 (for integrated volume correction) PTB-A-50.7 (load profile memory)
Ex approvals	
IECEx	Ex ia [ia] IIC T4 Gb, Ex op is IIC T4 Gb
ATEX	II 2G Ex ia [ia] IIC T4 Gb, II 2G Ex op is IIC T4 Gb
NEC/CEC (US/CA)	I.S. for Class I Division 1 Groups C and D T4; Ex/AEx ia IIB T4 Ga Class I, Division 2, Groups A, B, C, and/or D, T4
Enclosure rating	IP66
Digital outputs	Configurations: malfunction, electrically isolated LF pulse + (f_{max} = 100 Hz) malfunction, electrically isolated HF pulse + (f_{max} = 2 kHz) Encoder + LF pulse, electrically isolated (f_{max} = 100 Hz) Encoder + HF pulse, electrically isolated (f_{max} = 2 kHz) 2x LF pulse, electrically isolated (f_{max} = 2 kHz / 100 Hz) LF pulse + RS485 (externally powered) HF pulse + RS485 (externally powered)

RS485 protocol	Modbus RTU, Modbus Enron, ISO-17089.1 (DSfG)
Optical interface	According to EN 62056-21, Section 4.3
Dimensions (W x H x D)	See dimensional drawings
Material in contact with media	Aluminum AC-42100-S-T6
Mounting	Horizontal or vertical mounting with 0 D straight inlet/outlet piping
Electrical connection	
Voltage	Intrinsically safe supply: 4.5 ... 16 V DC, includes 3-month backup battery
Options	Autarkic meter configuration (5-year battery life)

Volume correction

Accuracy	Accuracy class 0.5
Conversion factor C	Maximum permitted error limits of ≤ ± 0.5% (at reference conditions)
Correction method	PTZ or TZ
Compressibility	SGERG88 AGA 8 Gross method 1 AGA 8 Gross method 2 AGA 8 DC92 AGA NX-19 AGA NX-19 mod. GERG91 Fixed value
Data archives	Measurement period archive (5867 entries) Daily archive (600 entries) Monthly archive (25 entries)
Log books	Event log book (1,000 entries) Parameter log book (250 entries) Metrology log book (100 entries) Gas parameters log book (150 entries)

Pressure sensor

Measuring ranges	
Absolute pressure	0.8 ... 5.2 bar(a) / 2.0 ... 10 bar(a) / 4.0 ... 20 bar(a) / 0.8... 20 bar(a) (11.6 ... 75.4 psi(a) / 29 ... 145 psi(a) / 58 ... 290 psi(a) / 11.6 ... 290 psi(a))
Gauge pressure	0 ... 4 bar(g) / 0 ... 10 bar(g) / 0 ... 20 bar(g) (0 ... 58 psi(a) / 0 ... 145 psi(a) / 0 ... 290 psi(a))

Temperature sensor

Measuring ranges	
Temperature	–25 ... +60 °C (–13 °F ... +140 °F) –40 ... +70 °C (–40 °F ... +158 °F)
Sensor type	Platinum resistance sensor, Pt1000 in stainless steel protective pipe
Ambient temperature	–40 ... +85 °C (–40 °F ... +185 °F)

Custody transfer measuring ranges

Metric dimensions

Nominal size	Meter size	Measuring range [m³/h]		Measuring span
		Min.	Max.	
DN 50 (2")	G 40	1.3	65	1 : 50
	G 65	2.0	100	1 : 50
	G 100	3.2	160	1 : 50
	G 100	1.6	160	1 : 100
	G 100	1.0	160	1 : 160
DN 80 (3")	G 100	3.2	160	1 : 50
	G 160	5.0	250	1 : 50
	G 160	2.5	250	1 : 100
	G 250	8.0	400	1 : 50
	G 250	4.0	400	1 : 100
	G 250	2.5	400	1 : 160
DN 100 (4")	G 160	5.0	250	1 : 50
	G 250	8.0	400	1 : 50
	G 250	4.0	400	1 : 100
	G 400	13	650	1 : 50
	G 400	6.5	650	1 : 100
	G 400	4.0	650	1 : 160
DN 150 (6")	G 250	8.0	400	1 : 50
	G 250	4.0	400	1 : 100
	G 400	13	650	1 : 50
	G 400	6.5	650	1 : 100
	G 400	4.0	650	1 : 160
	G 650	20	1,000	1 : 50
	G 650	10	1,000	1 : 100
	G 650	6.2	1,000	1 : 160
	G 650	5.0	1,000	1 : 200
	G 650	4.0	1,000	1 : 250

Imperial dimensions

Nominal size	Meter size	Measuring range [ft³/h]		Measuring span
		Min.	Max.	
2"	G 40	46	2295	1 : 50
	G 65	71	3,532	1 : 50
	G 100	113	5,650	1 : 50
	G 100	57	5,650	1 : 100
	G 100	35	5,650	1 : 160
3"	G 100	113	5,650	1 : 50
	G 160	177	8,829	1 : 50
	G 160	88	8,829	1 : 100
	G 250	283	14,126	1 : 50
	G 250	141	14,126	1 : 100
	G 250	88	14,126	1 : 160
4"	G 160	177	8,829	1 : 50
	G 250	283	14,126	1 : 50
	G 250	141	14,126	1 : 100
	G 400	459	22,955	1 : 50
	G 400	230	22,955	1 : 100
	G 400	141	22,955	1 : 160
6"	G 250	283	14,126	1 : 50
	G 250	141	14,126	1 : 100
	G 400	459	22,955	1 : 50
	G 400	230	22,955	1 : 100
	G 400	141	22,955	1 : 160
	G 650	706	35,315	1 : 50
	G 650	353	35,315	1 : 100
	G 650	2,190	35,315	1 : 160
	G 650	177	35,315	1 : 200
	G 650	141	35,315	1 : 250

Sizing tables

Corrected capacity at metering pressure in MSCFH at various operating pressures (psig)

Meter size		2"	3"	4"	6"
Model		5.5M	14M	23M	35M
Rating (ACFH)		5600	14,000	23,000	35,000
Operating pressure (psig)	1	5.85	14.64	24.05	36.59
	3	6.62	16.54	27.17	41.34
	5	7.38	18.44	30.29	46.10
	10	9.28	23.19	38.10	57.98
	15	11.18	27.94	45.91	69.86
	20	13.08	32.70	53.71	81.74
	25	14.98	37.45	61.52	93.62
	30	16.88	42.20	69.33	105.50
	40	20.68	51.70	84.94	129.26
	50	24.48	61.21	100.56	153.02
	60	28.29	70.71	116.17	176.78
	70	32.09	80.22	131.79	200.54
	80	35.89	89.72	147.40	224.30
	90	39.69	99.23	163.01	248.07
	100	43.49	108.73	178.63	271.83
	110	47.29	118.23	194.24	295.59
	120	51.10	127.74	209.86	319.35
	130	54.90	137.24	225.47	343.11
	140	58.70	146.75	241.09	366.87
	150	62.50	156.25	256.70	390.63
	175	72.01	180.01	295.74	450.03
	200	81.51	203.77	334.77	509.44
	225	91.01	227.54	373.81	568.84
	250	100.52	251.30	412.84	628.24
	275	110.02	275.06	451.88	687.64
	285	113.82	284.56	467.49	711.41

Corrected capacity at metering pressure in MSCMH at various operating pressures (kPag)

Model			G100	G250	G400	G650
Rating	kPa	Bar	0.16 160	0.4 400	0.65 650	1 1000
Operating pressure (kPag) 1	6.9	0.1	0.17	0.42	0.68	1.05
3	20.7	0.2	0.19	0.47	0.77	1.18
5	34.5	0.3	0.21	0.53	0.86	1.32
10	69.0	0.7	0.27	0.66	1.08	1.66
15	103.4	1.0	0.32	0.80	1.30	2.00
20	137.9	1.4	0.37	0.93	1.52	2.34
25	172.4	1.7	0.43	1.07	1.74	2.67
30	206.9	2.0	0.48	1.21	1.96	3.01
40	275.8	2.7	0.59	1.48	2.40	3.69
50	344.8	3.4	0.70	1.75	2.84	4.37
60	413.7	4.1	0.81	2.02	3.28	5.05
70	482.7	4.8	0.92	2.29	3.72	5.73
80	551.6	5.5	1.03	2.56	4.17	6.41
90	620.6	6.2	1.13	2.84	4.61	7.09
100	689.5	6.9	1.24	3.11	5.05	7.77
110	758.5	7.6	1.35	3.38	5.49	8.45
120	827.4	8.3	1.46	3.65	5.93	9.12
130	896.4	9.0	1.57	3.92	6.37	9.80
140	965.3	9.6	1.68	4.19	6.81	10.48
150	1034.3	10.3	1.79	4.46	7.25	11.16
175	1206.6	12.1	2.06	5.14	8.36	12.86
200	1379.0	13.8	2.33	5.82	9.46	14.56
225	1551.4	15.5	2.60	6.50	10.56	16.25
	1723.8	17.2	2.87	7.18	11.67	17.95
275	1896.1	18.9	3.14	7.86	12.77	19.65
285	1965.1	19.6	3.25	8.13	13.21	20.33

Order information

Our regional sales organization will be glad to advise you on which device configuration is best for you.

Dimensional drawings

FLOWSIC500, nominal size DN 50 / 2" (dimensions in mm (inch))

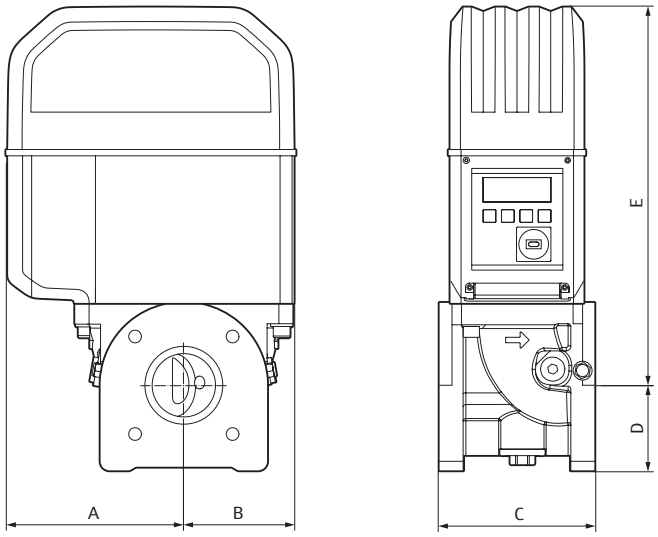

Nominal size	Weight	Dimensions				
		A	B	C	D	E
DN 50 (2")	10.6 (23.4)	153 (6.02)	78 (3.07)	150 (5.90)	71 (2.79)	272 (10.70)
	11.4 (25.1)			171 (6.73)		

All dimensions in mm (inch). All weights in kg (lbs).

FLOWSIC500, nominal size DN 80 / 3" (dimensions in mm (inch))

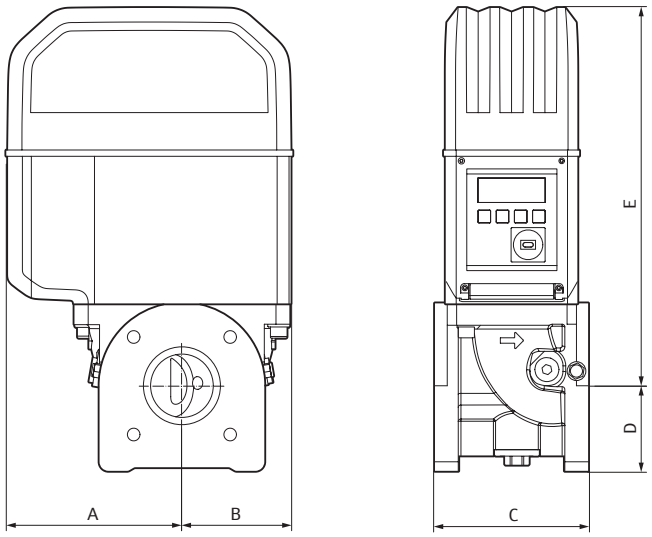

Nominal size	Weight	Dimensions				
		A	B	C	D	E
DN 80 (3")	18.3 (40.3)	194 (7.63)	121 (4.76)	171 (6.73)	94 (3.70)	417 (16.42)
	20.5 (45.2)			241 (9.49)		

All dimensions in mm (inch). All weights in kg (lbs).

FLOWSIC500, nominal size DN 100 / 4" (dimensions in mm (inch))

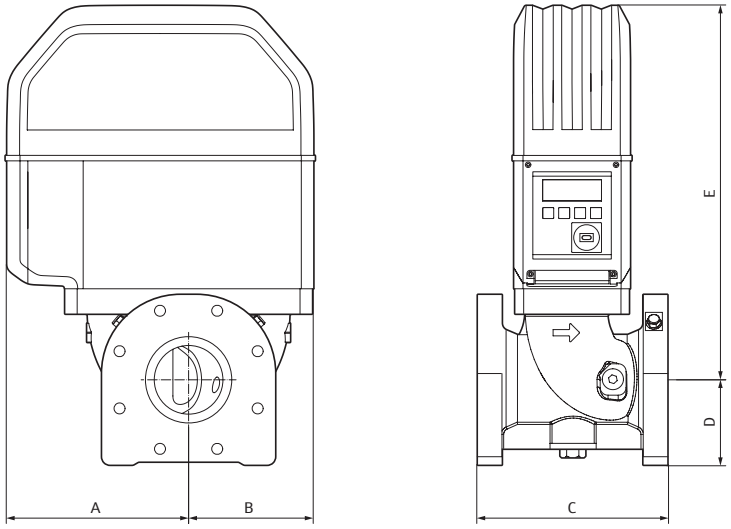

Nominal size	Weight	Dimensions				
		A	B	C	D	E
DN 100 (4")	27,2 (60)	231 (9.09)	159 (6.26)	241 (9.49)	108 (4.25)	476 (18.74)
	29,4 (64.8)			300 (11.81)		

All dimensions in mm (inch). All weights in kg (lbs).

FLOWSIC500, nominal size DN 150 / 6 " (dimensions in mm (inch))

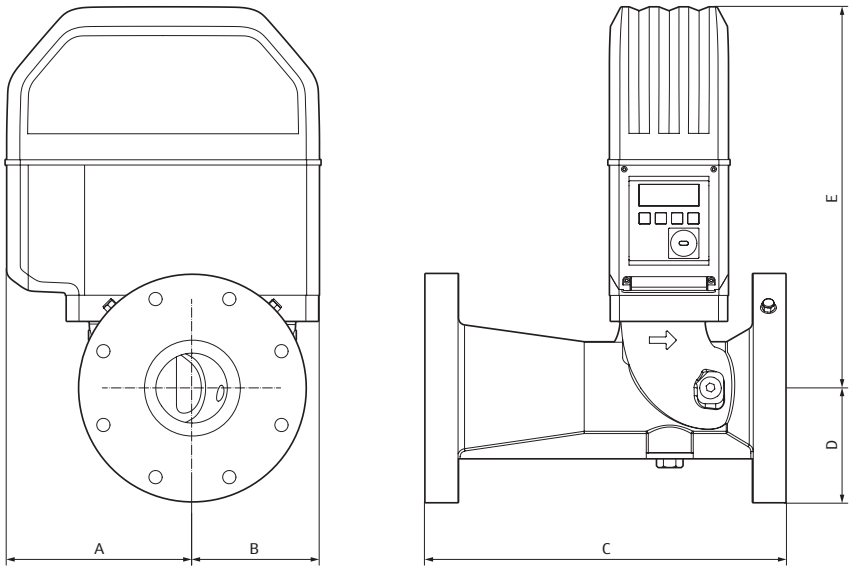

Nominal size	Weight	Dimensions				
		A	B	C	D	E
DN 150 (6")	35.0 (77)	232 (9.13)	158 (6.22)	450 (17.71)	143 (5.63)	476 (18.74)

All dimensions in mm (inch). All weights in kg (lbs).

Pressure sensor (dimensions in mm (inch))

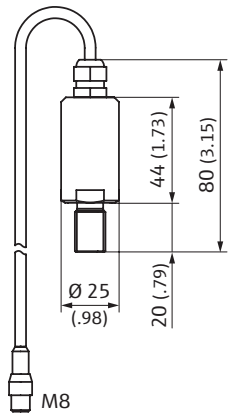

Temperature sensor (dimensions in mm (inch))

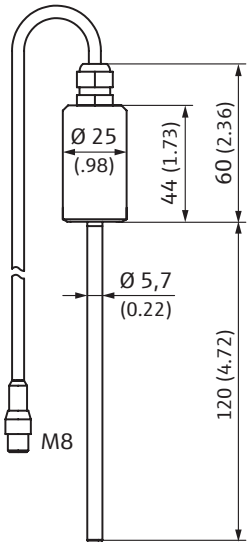

Application areas

Pressure loss

FLOWSIC500 causes a typical pressure loss of:

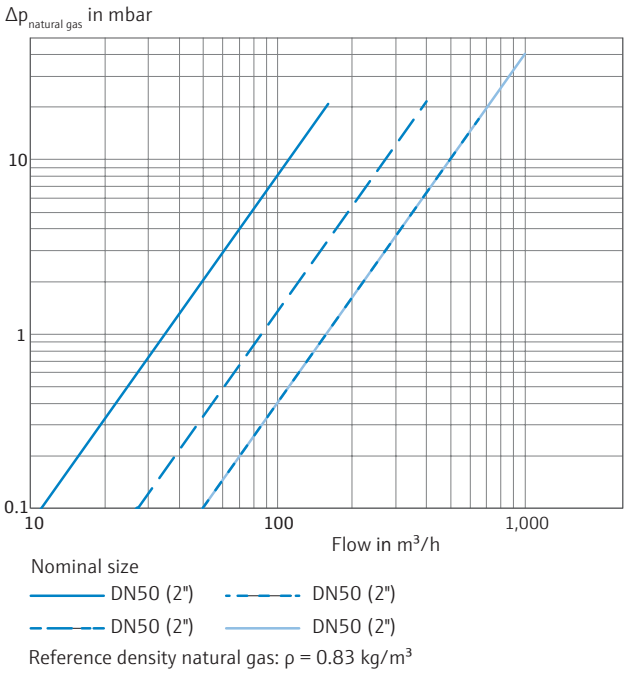

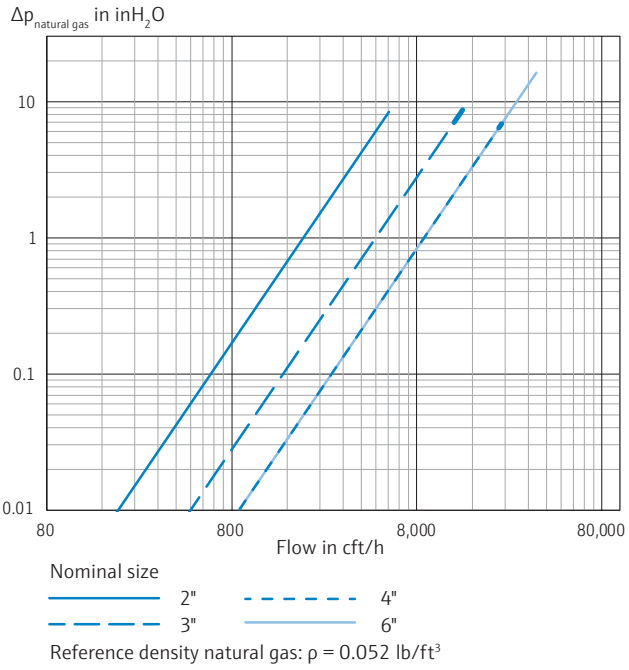

Speed of sound

The speed of sound in the measured gas must be within the range of 300 m/s to 600 m/s. (984.2 ft/s to 1,968 ft/s)

Methane concentration (CH_4) in natural gas

For very high methane concentrations, the FLOWSIC500 requires a minimum operating pressure for meter sizes of DN 80 (3") to DN 150 (6"). Methane has a damping effect on the signal transmission.

Meter size DN 50 (2")

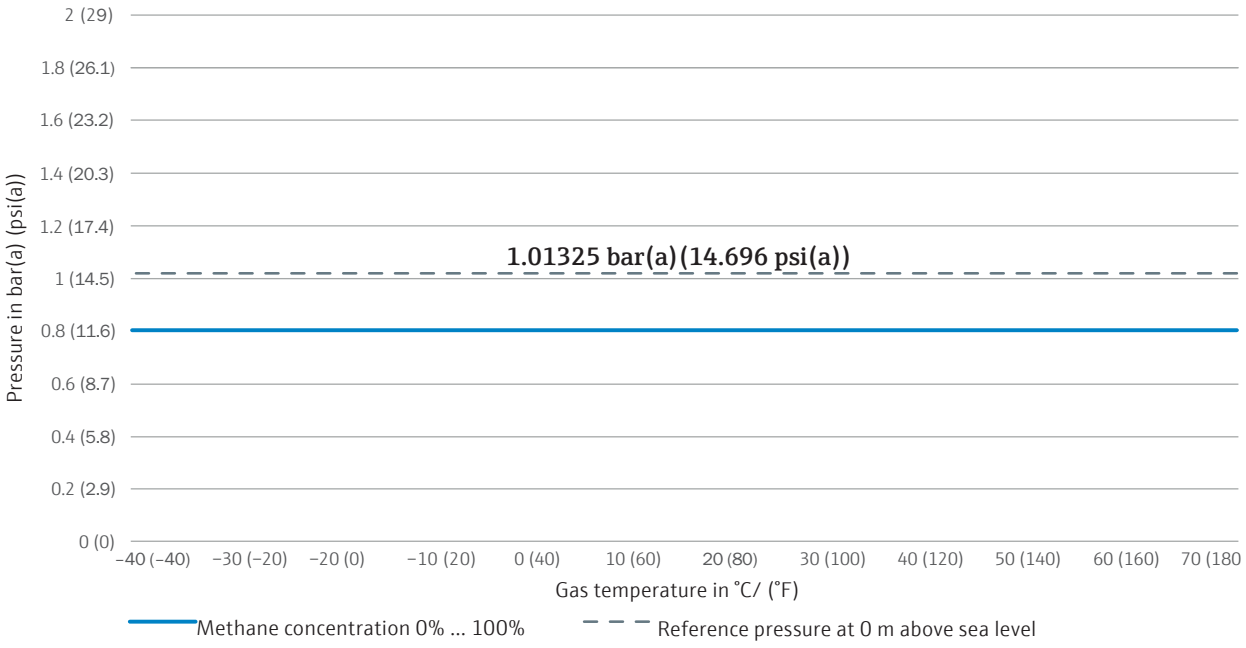

Meter size DN 80 / DN 100 / DN 150 (3" / 4" / 6")

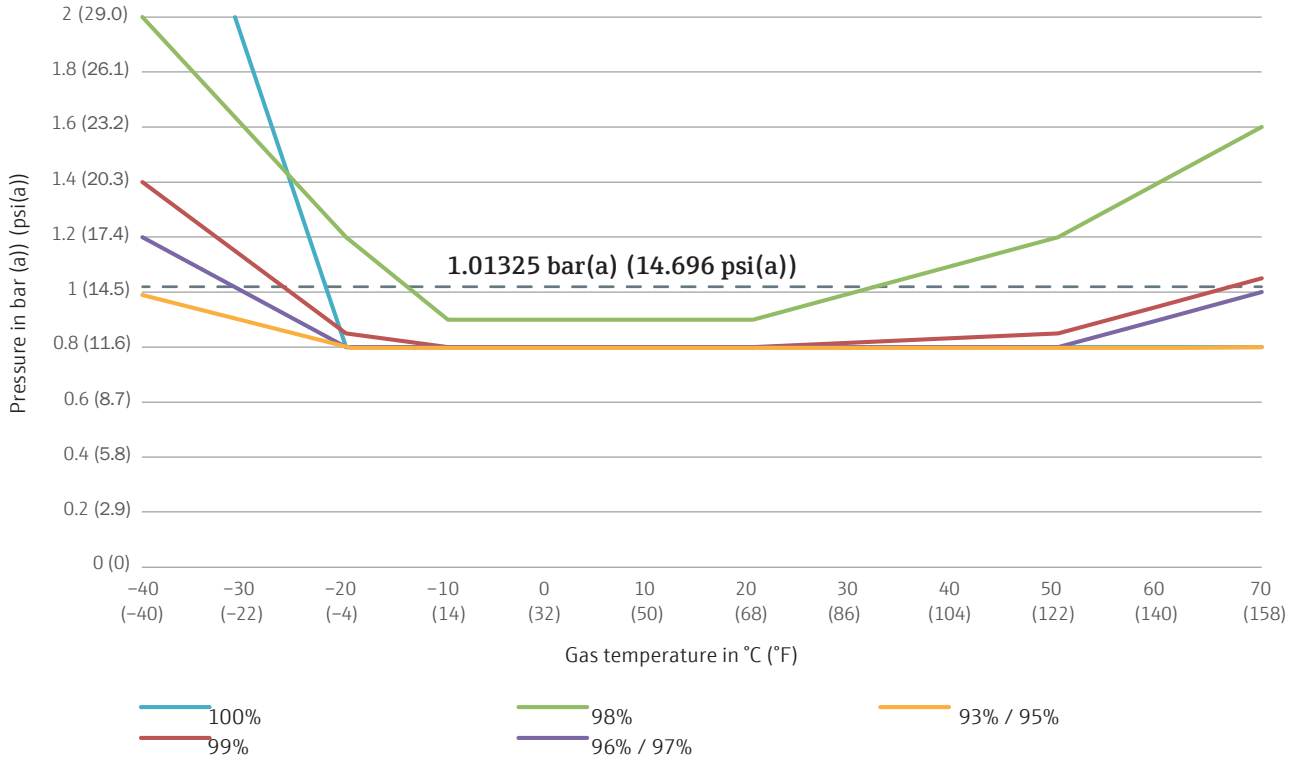

Carbon dioxide concentration (CO_2) in natural gas

The measuring capability of the FLOWSIC500 is limited by a maximum carbon dioxide concentration.

Meter size DN 50 (2")

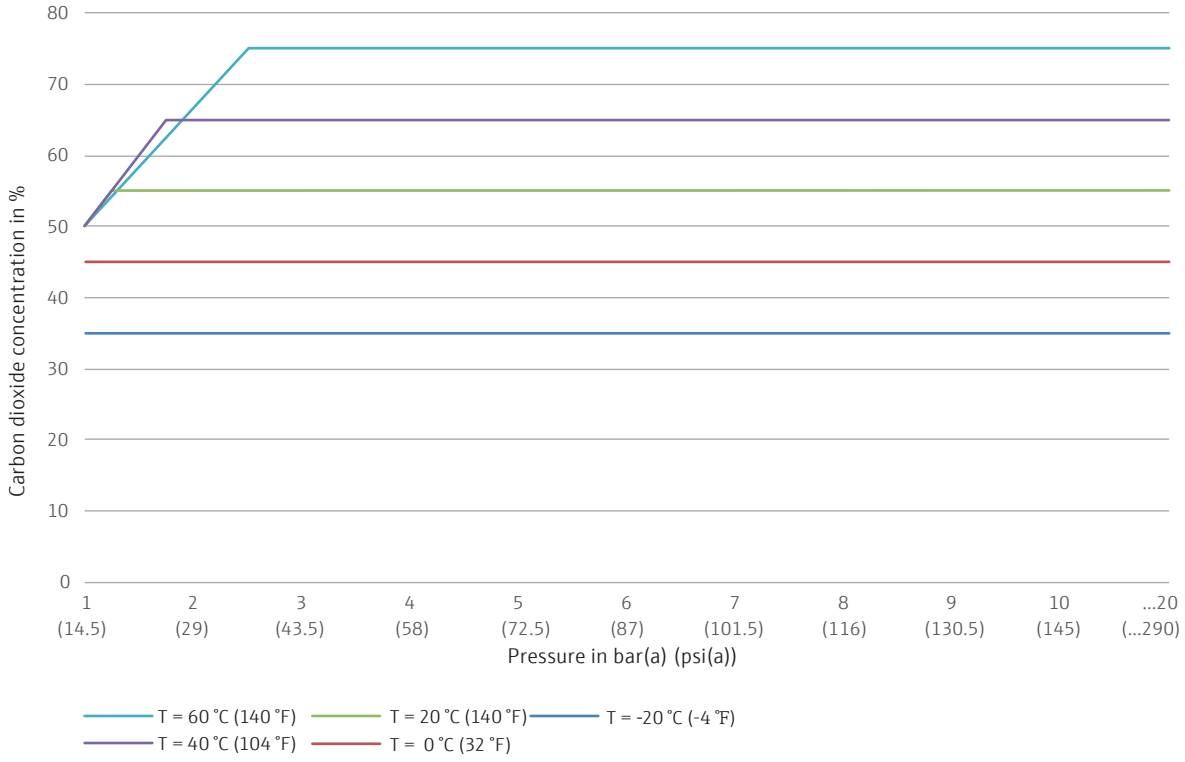

Meter size DN 80 / DN 100 / DN 150 (3" / 4" / 6")

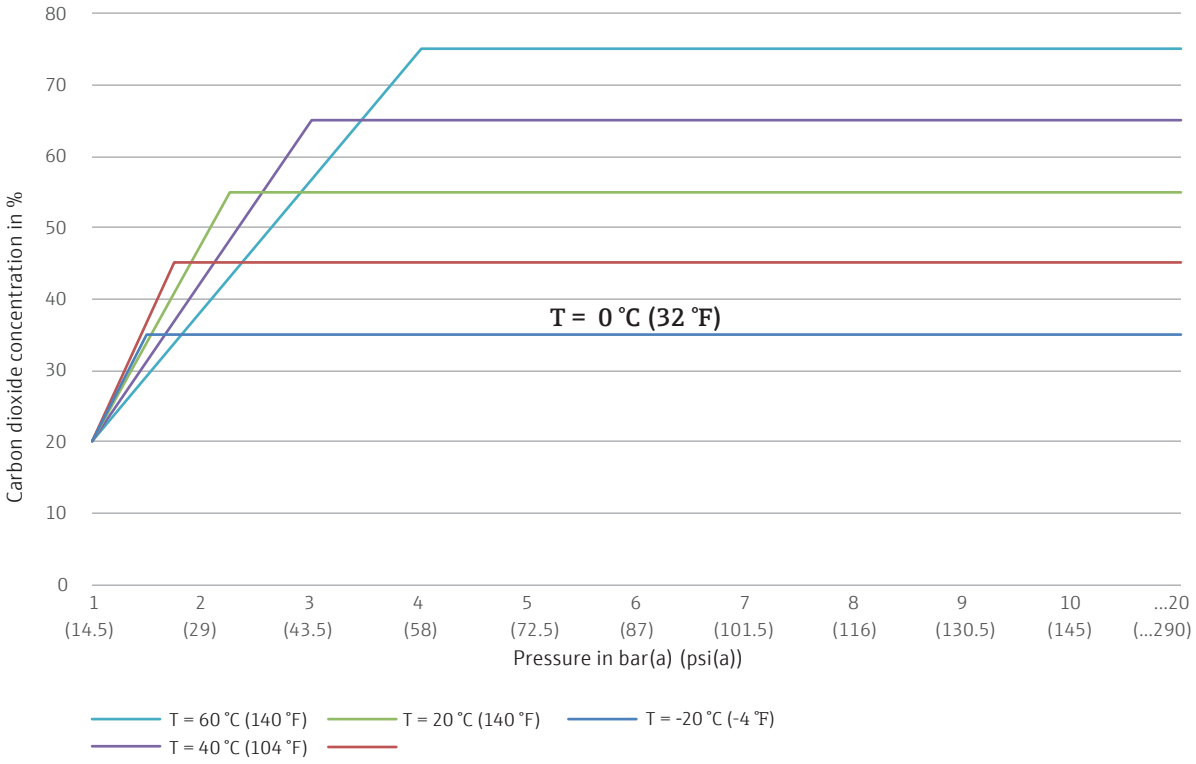

www.addresses.endress.com

Eco-friendly produced and printed on paper
from sustainable forestry.

IN013840/90/EN/02.25-00
8030089 / EN / V1-1

Endress+Hauser

People for Process Automation