TI01058T/09/EN/08.25-00
71721392
2025-07-22

Technical Information
iTHERM ModuLine TM401

Metric, direct-contact RTD basic thermometer for hygienic applications



Metric version with basic technology for all standard applications, permanent insert

Applications

- Specially designed for use in hygienic and aseptic applications in the Food & Beverages and Life Sciences industries
- Measuring range: −50 to +200 °C (−58 to +392 °F)
- Pressure range up to 50 bar (725 psi)
- Protection class: up to IP69K
- Can be used in non-hazardous areas

Head transmitters

All Endress+Hauser iTEMP transmitters are available with enhanced measurement accuracy and reliability compared to directly wired sensors. Outputs and communication protocol:

- Analog output 4 to 20 mA, HART, HART SIL, optional
- PROFINET over Ethernet-APL
- IO-Link

Your benefits

- Best price-performance ratio and fast delivery time
- User-friendly and reliable from product selection to maintenance
- International certification: hygiene standards as per 3-A, EHEDG, ASME BPE, FDA, TSE Certificate of Suitability
- Wide range of process connections

Endress+Hauser
People for Process Automation

Table of contents

Function and system design 3
Notes on selecting the right device 3
Measuring principle 4
Measuring system 5

Input 6
Measured variable 6
Measuring range 6

Output 6
Output signal 6
Family of temperature transmitters 6

Power supply 7
Wiring diagram for RTD 7
Cable entries 14
Device plugs 14
Overvoltage protection 14

Performance characteristics 15
Reference operating conditions 15
Maximum measurement error 15
Influence of ambient temperature 16
Self-heating 16
Response time 16
Calibration 16
Insulation resistance 17

Installation 17
Orientation 17
Installation instructions 17

Environment 20
Ambient temperature range 20
Storage temperature 20
Relative humidity 20
Climate class 20
Degree of protection 20
Shock and vibration resistance 21
Electromagnetic compatibility (EMC) 21

Process 21
Process temperature range 21
Thermal shock 21
Process pressure range 21
Medium - state of aggregation 22

Mechanical construction 23
Design, dimensions 23
Weight 23
Materials 23
Surface roughness 24
Terminal heads 24
Process connections 26

Certificates and approvals 32
Materials in contact with food/product (FCM) 32
CRN approval 32
Surface purity 32
Material resistance 32

Ordering information 33

Accessories 33
Device-specific accessories 34
Service-specific accessories 36
Communication-specific accessories 37
Online tools 37
System components 37

Documentation 38
Brief Operating Instructions (KA) 38
Operating Instructions (BA) 38
Safety Instructions (XA) 38
Functional Safety Manual (FY) 38

Function and system design

Notes on selecting the right device

iTHERM ModuLine, hygienic

This device is part of the product line of modular thermometers for hygienic and aseptic applications.

Differentiating factors when selecting a suitable thermometer

iTHERM ModuLine TM4x**1**	iTHERM ModuLine TM4x**2**
Metric version	Imperial version
↓	↓

TM4**1**x characterizes the device that uses cutting-edge technology, with features such as a replaceable insert, quick-fastening extension neck (iTHERM QuickNeck), vibration-resistant and fast-response sensor technology iTHERM StrongSens and QuickSens) and approval for use in hazardous areas

iTHERM ModuLine TM411

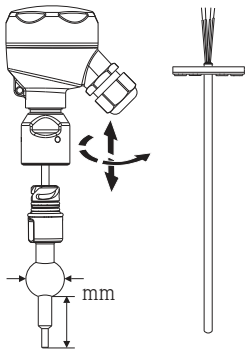

iTHERM ModuLine TM412

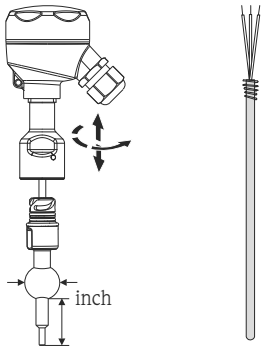

↓ ↓

TM4**0**x characterizes the device that uses basic technology, with features such as a fixed, non-replaceable insert, application in non-hazardous areas, standard extension neck, low-cost unit

iTHERM ModuLine TM401

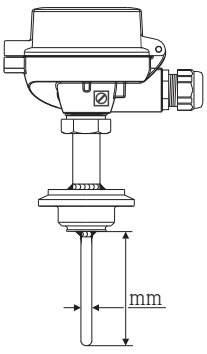

iTHERM ModuLine TM402

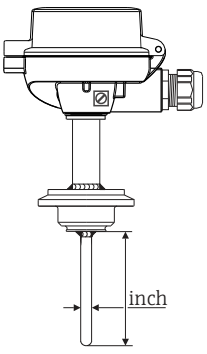

Measuring principle

Resistance thermometers (RTD)

These resistance thermometers use a Pt100 element as the temperature sensor according to IEC 60751. The temperature sensor is a temperature-sensitive platinum resistor with a resistance of 100 Ω at 0 °C (32 °F) and a temperature coefficient α = 0.003851 $°C^{-1}$.

There are two different versions of platinum resistance thermometers:

- **Wire-wound (WW):WW** In these thermometers, a double coil of fine, high-purity platinum wire is accommodated in a ceramic support. This carrier is then sealed top and bottom with a ceramic protective layer. These resistance thermometers not only facilitate very reproducible measurements but also offer good long-term stability of the resistance/temperature characteristic within temperature ranges up to 600 °C (1 112 °F). This type of sensor is relatively large in size and is comparatively sensitive to vibrations.
- **Thin-film platinum resistance thermometers(TF):** A very thin, ultrapure platinum layer, approx. 1 µm thick, is vaporized in a vacuum on a ceramic substrate and then structured photolithographically. The platinum conductor paths formed in this way create the measuring resistance. Additional covering and passivation layers are applied and reliably protect the thin platinum layer from contamination and oxidation, even at high temperatures.

The primary advantages of thin-film temperature sensors over wire-wound versions are their smaller sizes and better vibration resistance. It should be noted that, due to the operating principle of TF sensors, they frequently exhibit a relatively slight deviation in their resistance/temperature characteristic from the standard characteristic defined in IEC 60751 at higher temperatures. As a result, the tight limit values of tolerance class A as per IEC 60751 can only be observed with TF sensors at temperatures up to approx. 300 °C (572 °F).

Thermocouples (TC)

Thermocouples are comparatively simple, robust temperature sensors which use the Seebeck effect for temperature measurement: if two electrical conductors made of different materials are connected at a point, a weak electrical voltage can be measured between the two open conductor ends if the conductors are subjected to a thermal gradient. This voltage is called thermoelectric voltage or electromotive force (emf). Its magnitude depends on the type of conducting materials and the temperature difference between the "measuring point" (the junction of the two conductors) and the "cold junction" (the open conductor ends). Accordingly, thermocouples primarily only measure differences in temperature. The absolute temperature at the measuring point can be determined from these if the associated temperature at the cold junction is known or is measured separately and compensated for. The material combinations and associated thermoelectric voltage/temperature characteristics of the most common types of thermocouple are standardized in the IEC 60584 and ASTM E230/ANSI MC96.1 standards.

Measuring system

Endress+Hauser offers a complete portfolio of optimized components for the temperature measuring point – everything you need for the seamless integration of the measuring point into the overall facility. This includes:

- Power supply unit/barrier
- Display units
- Overvoltage protection

For more information, see the brochure "System Components - Solutions for a Complete Measuring Point" (FA00016K)

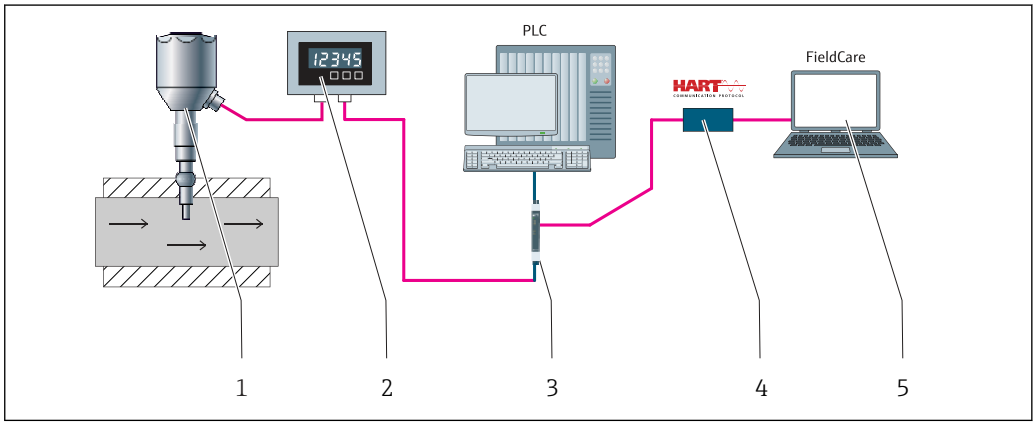

1 Example of application, measuring point layout with additional Endress+Hauser components

1 *Installed iTHERM compact thermometer with HART communication protocol*
2 *Process indicator from the RIA product range: The process indicator is looped into the current loop and displays the measuring signal or the HART process variables in digital form. The process indicator does not require an external power supply. It is powered directly from the current loop.*
3 *RN series active barrier - The active barrier (17.5 V_{DC}, 20 mA) has a galvanically isolated output for supplying voltage to 2-wire transmitters. The universal power supply works with an input supply voltage of 24 to 230 V AC/DC, 0/50/60 Hz, which means that it can be used in all international power grids.*
4 *Communication examples: HART Communicator (handheld device), FieldXpert, Commubox FXA195 for intrinsically safe HART communication with FieldCare via a USB port.*
5 *FieldCare is an FDT-based plant asset management tool from Endress+Hauser; for more details, see 'Accessories' section.*

Input

Measured variable

Temperature (temperature-linear transmission behavior)

Measuring range

Sensor type	Measuring range
Pt100 thin-film	−50 to +200 °C (−58 to +392 °F)

Output

Output signal

Generally, the measured value can be transmitted in one of two ways:

- Directly-wired sensors - sensor measured values forwarded without transmitter.
- Via all common protocols by selecting an appropriate Endress+Hauser iTEMP temperature transmitter. All the transmitters listed below are mounted directly in the terminal head and wired with the sensory mechanism.

Family of temperature transmitters

Thermometers fitted with iTEMP transmitters are an installation-ready complete solution to improve temperature measurement by significantly increasing measurement accuracy and reliability, when compared to direct wired sensors, as well as reducing both wiring and maintenance costs.

4-20 mA head transmitter
They offer a high degree of flexibility, thereby supporting universal application with low inventory storage. The iTEMP transmitters can be configured quickly and easily at a PC. Endress+Hauser offers free configuration software which can be downloaded from the Endress+Hauser website.

HART head transmitter
The iTEMP transmitter is a 2-wire device with one or two measuring inputs and one analog output. The device not only transfers converted signals from resistance thermometers and thermocouples, it also transfers resistance and voltage signals using HART communication. Swift and easy operation, visualization and maintenance using universal configuration software like FieldCare, DeviceCare or FieldCommunicator 375/475. Integrated Bluetooth® interface for the wireless display of measured values and configuration via Endress +Hauser SmartBlue app, optional.

PROFIBUS PA head transmitter
Universally programmable iTEMP head transmitter with PROFIBUS PA communication. Conversion of various input signals into digital output signals. High measurement accuracy over the complete operating temperature range. PROFIBUS PA functions and device-specific parameters are configured via fieldbus communication.

FOUNDATION Fieldbus™ head transmitters
Universally programmable iTEMP head transmitter with FOUNDATION Fieldbus™ communication. Conversion of various input signals into digital output signals. High measurement accuracy over the complete operating temperature range. All iTEMP transmitters are approved for use in all the main process control systems. The integration tests are performed in Endress+Hauser's 'System World'.

Head transmitter with PROFINET and Ethernet-APL™
The iTEMP transmitter is a 2-wire device with two measuring inputs. The device not only transfers converted signals from resistance thermometers and thermocouples, it also transfers resistance and voltage signals using the PROFINET protocol. Power is supplied via the 2-wire Ethernet connection according to IEEE 802.3cg 10Base-T1. The iTEMP transmitter can be installed as an intrinsically safe electrical apparatus in Zone 1 hazardous areas. The device can be used for instrumentation purposes in the terminal head form B (flat face) according to DIN EN 50446.

Head transmitter with IO-Link
The iTEMP transmitter is an IO-Link device with a measurement input and an IO-Link interface. It offers a configurable, simple and cost-effective solution thanks to digital communication via IO-Link. The device is mounted in a terminal head form B (flat face) as per DIN EN 5044.

Advantages of the iTEMP transmitters:
- Dual or single sensor input (optionally for certain transmitters)
- Attachable display (optionally for certain transmitters)
- Unsurpassed reliability, accuracy and long-term stability in critical processes

- Mathematical functions
- Monitoring of the thermometer drift, sensor backup functionality, sensor diagnostic functions
- Sensor-transmitter-matching based on the Callendar van Dusen coefficients (CvD).

Power supply

- According to the 3-A Sanitary Standard and EHEDG, electrical connecting cables must be smooth, corrosion-resistant and easy to clean.
- Grounding or shield connections are possible via special ground terminals on the terminal head.

Wiring diagram for RTD

Type of sensor connection

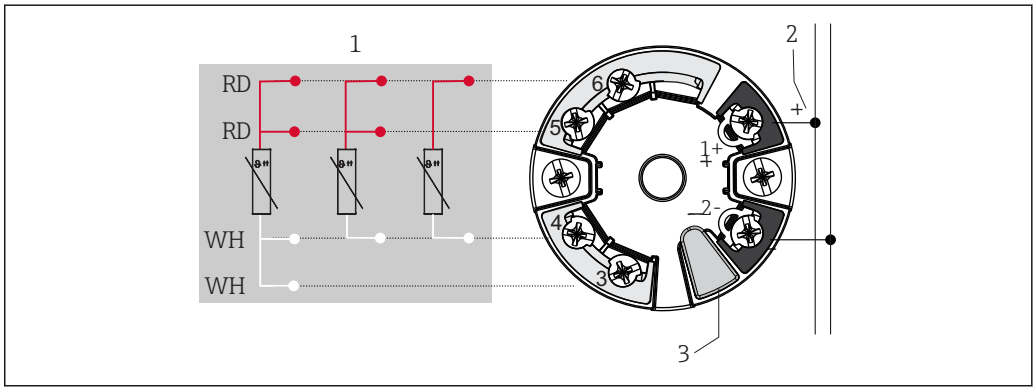

2 *Head-mounted iTEMP TMT7x transmitter or TMT31 (single sensor input)*

1 *Sensor input, RTD and Ω: 4-, 3- and 2-wire*
2 *Power supply or fieldbus connection*
3 *Display connection/CDI interface*

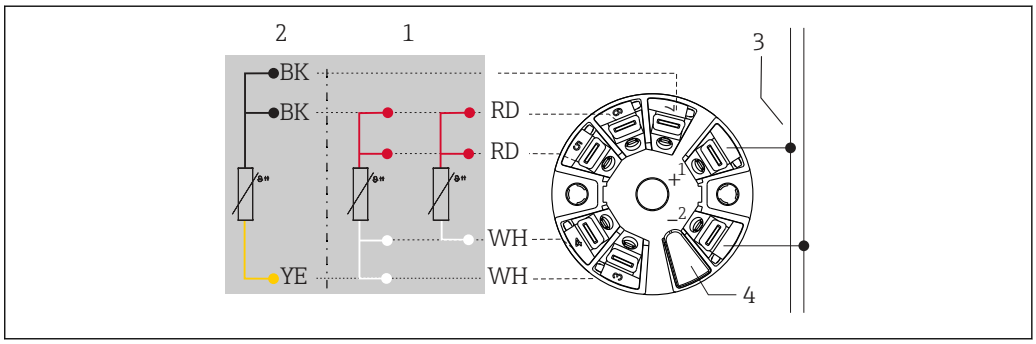

3 *Head-mounted iTEMP TMT8x transmitter (dual sensor input)*

1 *Sensor input 1, RTD: 4- and 3-wire*
2 *Sensor input 2, RTD: 3-wire*
3 *Power supply or fieldbus connection*
4 *Display connection*

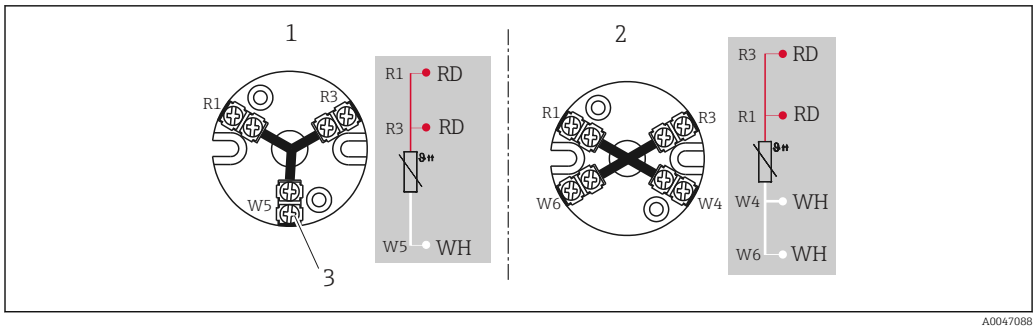

4 *Terminal block mounted*

1 3-wire single
2 4-wire single
3 Outside screw

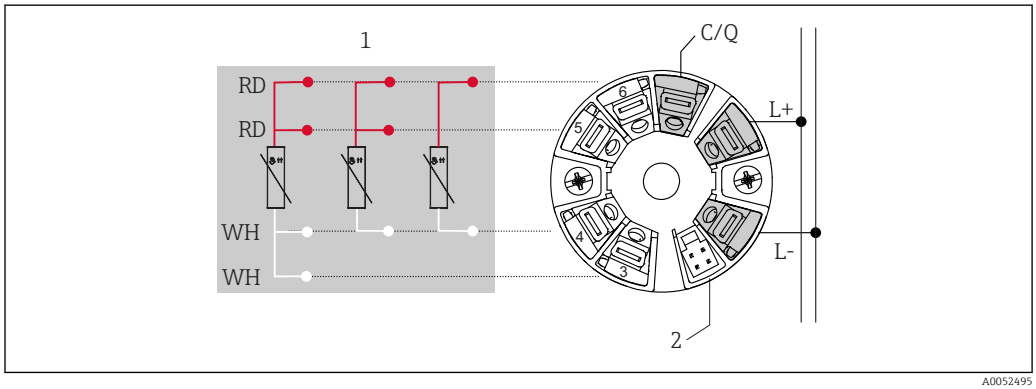

5 *Head-mounted iTEMP TMT36 transmitter (single sensor input)*

1 RTD sensor input: 4-, 3- and 2-wire
2 Display connection
L+ 18 to 30 V_{DC} power supply
L- 0 V_{DC} power supply
C/Q IO-Link or switch output

Terminals

iTEMP head transmitters fitted with push-in terminals unless screw terminals are explicitly selected or a double sensor is installed.

Cable entries

The cable entries must be selected during configuration of the device. Different terminal heads offer different options in terms of the thread and number of available cable entries.

Device plugs

The manufacturer offers a wide variety of device plugs for the simple and fast integration of the thermometer into a process control system. The following tables show the PIN assignments of the various plug connector combinations.

The manufacturer advises against connecting thermocouples directly to connectors. The direct connection to the pins of the plug might generate a new "thermocouple" which influences the accuracy of the measurement. The thermocouples are connected in combination with a iTEMP transmitter.

Abbreviations

#1	Order: first transmitter/insert	#2	Order: second transmitter/insert
i	Insulated. Wires marked 'i' are not connected and are insulated with heat shrink tubes.	YE	Yellow

GND	Grounded. Wires marked 'GND' are connected to the internal grounding screw in the terminal head.	RD	Red
BN	Brown	WH	White
GNYE	Green-yellow	PK	Pink
BU	Blue	GN	Green
GY	Gray	BK	Black

Terminal head with a cable entry [1)]

Plug	**1x PROFIBUS PA**								**1x FOUNDATION™ Fieldbus (FF)**				**1x PROFINET and Ethernet-APL™**			
Plug thread	M12				7/8"				7/8"				M12			
PIN number	1	2	3	4	1	2	3	4	1	2	3	4	1	2	3	4
Electrical connection (terminal head)																
Flying leads and TC	Not connected (not insulated)															
3-wire terminal block (1x Pt100)	RD	RD	WH		RD	RD	WH		RD	RD	WH		Cannot be combined		Cannot be combined	
4-wire terminal block (1x Pt100)			WH	WH			WH	WH			WH	WH				
6-wire terminal block (2x Pt100)	RD (#1) [2)]	RD (#1)	WH (#1)		RD (#1)	RD (#1)	WH (#1)		RD (#1)	RD (#1)	WH (#1)					
1x TMT 4 to 20 mA or HART®	+	i	-	i	+	i	-	i	+	i	-	i	Cannot be combined			
2x TMT 4 to 20 mA or HART® in the terminal head with a high cover	+(#1)	+(#2)	-(#1)	-(#2)	+(#1)	+(#2)	-(#1)	-(#2)	+(#1)	+(#2)	-(#1)	-(#2)				
1x TMT PROFIBUS® PA	+	i	-	GND [3)]	+	i	-	GND [3)]	Cannot be combined							
2x TMT PROFIBUS® PA	+(#1)		-(#1)		+		-									
1x TMT FF	Cannot be combined				Cannot be combined				-	+	GND	i	Cannot be combined			
2x TMT FF									-(#1)	+(#1)						
1x TMT PROFINET®									Cannot be combined				Ethernet-APL signal -	Ethernet-APL signal +	GND	-
2x TMT PROFINET®													Ethernet-APL signal - (#1)	Ethernet-APL signal + (#1)		
PIN position and color code	 1 BN 2 GNYE 3 BU 4 GY A0018929				 1 BN 2 GNYE 3 BU 4 GY A0018930				 1 BU 2 BN 3 GY 4 GNYE A0018931				 1 RD 2 GN A0052119			

1) Options depend on product and configuration
2) Second Pt100 is not connected
3) If a head is used without grounding screw, e.g. plastic housing TA30S or TA30P, insulated 'i' instead of grounded GND

Terminal head with a cable entry [1)]

Plug	4-pin/8-pin							
Plug thread	M12							
PIN number	1	2	3	4	5	6	7	8
Electrical connection (terminal head)								
Flying leads and TC	Not connected (not insulated)							
3-wire terminal block (1x Pt100)	RD	RD	WH		i			
4-wire terminal block (1x Pt100)			WH	WH				
6-wire terminal block (2x Pt100)			WH		BK	BK	YE	
1x TMT 4 to 20 mA or HART®	+(#1)	i	-(#1)	i	i			
2x TMT 4 to 20 mA or HART® in the terminal head with a high cover					+(#2)	i	-(#2)	i
1x TMT PROFIBUS® PA	Cannot be combined							
2x TMT PROFIBUS® PA								
1x TMT FF	Cannot be combined							
2x TMT FF								
1x TMT PROFINET®	Cannot be combined							
2x TMT PROFINET®	Cannot be combined							
PIN position and color code	 1 BN 2 GNYE 3 BU 4 GY A0018929				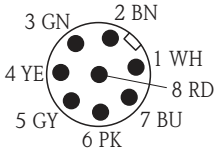 A0018927			

1) Options depend on product and configuration

Terminal head with one cable entry

Plug	1x IO-Link, 4-pin			
Plug thread	M12			
PIN number	1	2	3	4
Electrical connection (terminal head)				
Flying leads	Not connected (not insulated)			
3-wire terminal block (1x Pt100)	RD	i	RD	WH
4-wire terminal block (1x Pt100)	Cannot be combined			
6-wire terminal block (2x Pt100)				
1x TMT 4 to 20 mA or HART	Cannot be combined			
2x TMT 4 to 20 mA or HART in the terminal head with a high cover				
1x TMT PROFIBUS PA	Cannot be combined			
2x TMT PROFIBUS PA				
1x TMT FF	Cannot be combined			
2x TMT FF				
1x TMT PROFINET	Cannot be combined			
2x TMT PROFINET				
1x TMT IO-Link	L+	-	L-	C/Q

Plug	1x IO-Link, 4-pin			
2x TMT IO-Link	L+ (#1)	-	L- (#1)	C/Q
PIN position and color code	 1 BN 3 BU 4 BK A0055383			

Terminal head with two cable entries [1)]

Plug	2x PROFIBUS PA								2x FOUNDATION™ Fieldbus (FF)				2x PROFINET and Ethernet-APL™			
Plug thread  A0021706	M12(#1) / M12(#2)				7/8"(#1)/7/8"(#2)				7/8"(#1)/7/8"(#2)				M12 (#1)/M12 (#2)			
PIN number	1	2	3	4	1	2	3	4	1	2	3	4	1	2	3	4
Electrical connection (terminal head)																
Flying leads and TC	Not connected (not insulated)															
3-wire terminal block (1x Pt100)	RD/i	RD/i	WH/i		RD/i	RD/i	WH/i		RD/i	RD/i	WH/i		Cannot be combined		WH/i	
4-wire terminal block (1x Pt100)			WH/i	WH/i			WH/i	WH/i			WH/i	WH/i				
6-wire terminal block (2x Pt100)	RD/BK	RD/BK	WH/YE		RD/BK	RD/BK	WH/YE		RD/BK	RD/BK	WH/YE					
1x TMT 4 to 20 mA or HART®	+/i	i/i	-/i	i/i	+/i	i/i	-/i	i/i	+/i	i/i	-/i	i/i	+/i	i/i	-/i	i/i
2x TMT 4 to 20 mA or HART® in the terminal head with a high cover	+ (#1)/ + (#2)		- (#1)/ -(#2)		+ (#1)/ + (#2)		- (#1)/ -(#2)		+ (#1)/ + (#2)		- (#1)/ -(#2)		+ (#1)/ +(#2)		- (#1)/ -(#2)	
1x TMT PROFIBUS® PA	+/i		-/i	GND/ GND	+/i		-/i	GND/ GND	Cannot be combined							
2x TMT PROFIBUS® PA	+ (#1)/ + (#2)		- (#1)/ -(#2)		+ (#1)/ + (#2)		- (#1)/ -(#2)									
1x TMT FF	Cannot be combined				Cannot be combined				-/i	+/i	i/i	GND/ GND	Cannot be combined			
2x TMT FF									- (#1)/ -(#2)	+ (#1)/ + (#2)						
1x TMT PROFINET®	Cannot be combined				Cannot be combined				Cannot be combined				Ethernet-APL signal -	Ethernet-APL signal +	GND	i

Plug	2x PROFIBUS PA		2x FOUNDATION™ Fieldbus (FF)	2x PROFINET and Ethernet-APL™			
2x TMT PROFINET®	Cannot be combined	Cannot be combined	Cannot be combined	Ethernet-APL signal - (#1) and (#2)	Ethernet-APL signal + (#1) and (#2)		
PIN position and color code	 1 BN 2 GNYE 3 BU 4 GY A0018929	 1 BN 2 GNYE 3 BU 4 GY A0018930	 1 BU 2 BN 3 GY 4 GNYE A0018931	 1 RD 2 GN A0052119			

1) Options depend on product and configuration

Terminal head with two cable entries [1)]

Plug	4-pin/8-pin							
Plug thread  A0021706	M12 (#1)/M12 (#2)							
PIN number	1	2	3	4	5	6	7	8

Electrical connection (terminal head)					
Flying leads and TC	Not connected (not insulated)				
3-wire terminal block (1x Pt100)	RD/i	RD/i	WH/i		i/i
4-wire terminal block (1x Pt100)			WH/i	WH/i	
6-wire terminal block (2x Pt100)	RD/BK	RD/BK	WH/YE		
1x TMT 4 to 20 mA or HART®	+/i	i/i	-/i	i/i	
2x TMT 4 to 20 mA or HART® in the terminal head with a high cover	+(#1)/ +(#2)		-(#1)/-(#2)		
1x TMT PROFIBUS® PA	Cannot be combined				
2x TMT PROFIBUS® PA					
1x TMT FF	Cannot be combined				
2x TMT FF					
1x TMT PROFINET®	Cannot be combined				
2x TMT PROFINET®	Cannot be combined				
PIN position and color code	 1 BN 2 GNYE 3 BU 4 GY A0018929				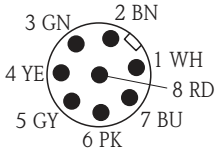 A0018927

1) Options depend on product and configuration

Terminal head with two cable entries

Plug	2x IO-Link, 4-pin			
Plug thread	M12(#1)/M12 (#2)			
PIN number	1	2	3	4
Electrical connection (terminal head)				
Flying leads	Not connected (not insulated)			
3-wire terminal block (1x Pt100)	RD	i	RD	WH
4-wire terminal block (1x Pt100)	Cannot be combined			
6-wire terminal block (2x Pt100)	RD/BK	i	RD/BK	WH/YE
1x TMT 4 to 20 mA or HART	Cannot be combined			
2x TMT 4 to 20 mA or HART in the terminal head with a high cover				
1x TMT PROFIBUS PA	Cannot be combined			
2x TMT PROFIBUS PA				
1x TMT FF	Cannot be combined			
2x TMT FF				
1x TMT PROFINET	Cannot be combined			
2x TMT PROFINET				
1x TMT IO-Link	L+	-	L-	C/Q
2x TMT IO-Link	L+ (#1) and (#2)	-	L- (#1) and (#2)	C/Q
PIN position and color code	 1 BN 3 BU 4 BK A0055383			

Connection combination: insert - transmitter [1)]

Insert	Transmitter connection [2)]			
	iTEMP TMT31/iTEMP TMT7x		iTEMP TMT8x	
	1x 1-channel	2x 1-channel	1x 2-channel	2x 2-channel
1x sensor (Pt100 or TC), flying leads	Sensor (#1) : transmitter (#1)	Sensor (#1) : transmitter (#1) (Transmitter (#2) not connected)	Sensor (#1) : transmitter (#1)	Sensor (#1) : transmitter (#1) Transmitter (#2) not connected
2x sensor (2x Pt100 or 2x TC), flying leads	Sensor (#1) : transmitter (#1) Sensor (#2) insulated	Sensor (#1) : transmitter (#1) Sensor (#2): transmitter (#2)	Sensor (#1) : transmitter (#1) Sensor (#2): transmitter (#1)	Sensor (#1) : transmitter (#1) Sensor (#2): transmitter (#1) (Transmitter (#2) not connected)
1x sensor (Pt100 or TC),with terminal block [3)]	Sensor (#1) : transmitter in cover	Cannot be combined	Sensor (#1) : transmitter in cover	Cannot be combined

Insert	Transmitter connection [2]			
	iTEMP TMT31/iTEMP TMT7x		iTEMP TMT8x	
	1x 1-channel	2x 1-channel	1x 2-channel	2x 2-channel
2x sensor (2x Pt100 or 2x TC) with terminal block	Sensor (#1) : transmitter in cover Sensor (#2) not connected		Sensor (#1) : transmitter in cover Sensor (#2): transmitter in cover	
2x sensors (2x Pt100 or 2x TC) in conjunction with feature 600, option MG [4]	Cannot be combined	Sensor (#1) : transmitter (#1) Sensor (#2): transmitter (#2)	Cannot be combined	Sensor (#1): transmitter (#1) - channel 1 Sensor (#2): transmitter (#2) - channel 1

1) Options depend on product and configuration
2) If 2 transmitters are selected in a terminal head, transmitter (#1) is installed directly on the insert. Transmitter (#2) is installed in the high cover. A TAG cannot be ordered for the second transmitter as standard. The bus address is set to the default value and, if necessary, must be changed manually before commissioning.
3) Only in the terminal head with a high cover, only 1 transmitter possible. A ceramic terminal block is automatically fitted on the insert.
4) Individual sensors each connected to channel 1 of a transmitter

Cable entries

See "Terminal heads" section

Device plugs

PIN assignment of the M12 plugs, connection combinations

Plug	M12 plug, 4-pin			
PIN number	1	2	3	4
Electrical connection (terminal head)				
Flying leads	Not connected (not insulated)			
3-wire terminal block (1x Pt100)	RD	RD	WH	
4-wire terminal block (1x Pt100)			WH	WH
1x TMT 4 to 20 mA or HART	+	i	-	i
PIN position and color code	 1 BN 2 GNYE 3 BU 4 GY A0018929			

Abbreviations

i	RD	WH	BN	GNYE	BU	GY
Insulated [1]	Red	White	Brown	Green-yellow	Blue	Gray

1) Wires marked 'i' are not connected and are insulated with heat shrink tubes.

Overvoltage protection

To protect against overvoltage in the power supply and signal/communication cables for the thermometer electronics, Endress+Hauser offers the HAW562 surge arrester for DIN rail mounting and the HAW569 for field housing installation.

For more information, see the Technical Information 'HAW562 Surge arrester' TI01012K and 'HAW569 Surge arrester' TI01013K.

Performance characteristics

Reference operating conditions

This data is relevant for determining the measurement accuracy of the iTEMP transmitters used. See technical documentation of the specific iTEMP transmitter.

Maximum measurement error

RTD resistance thermometer according to IEC 60751

Class	Max. tolerances (°C)	Characteristics
RTD maximum sensor error		
Cl. A	± (0.15 + 0.002 · |t| [1])	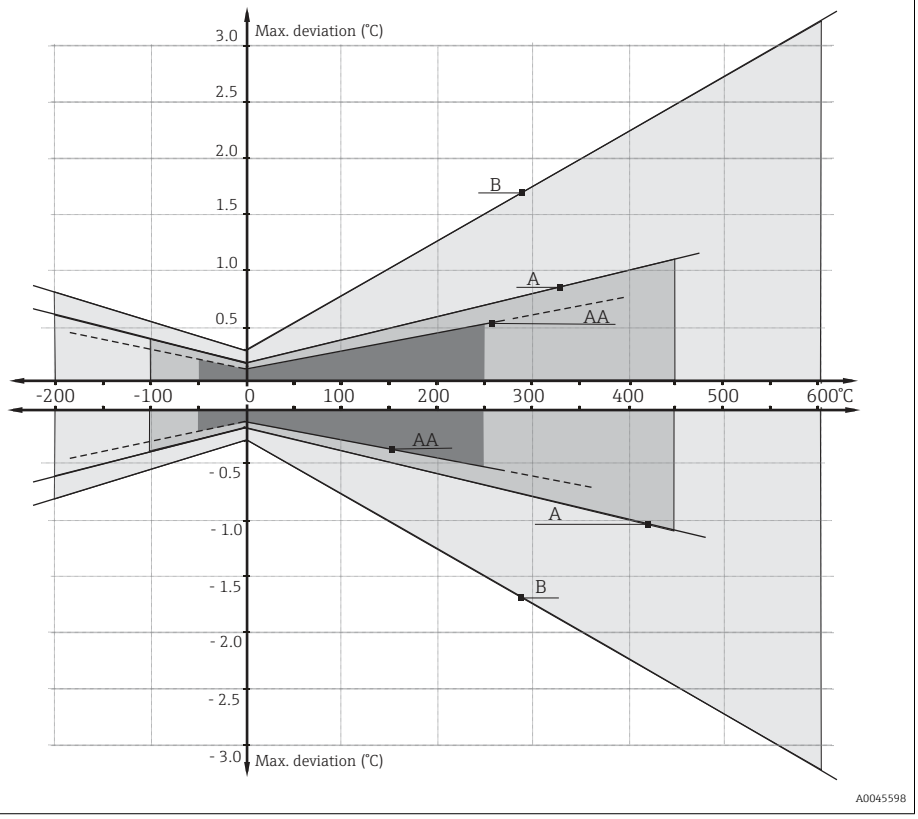
Cl. AA, previously 1/3 Cl. B	± (0.1 + 0.0017 · |t|) [1]	
Cl. B	± (0.3 + 0.005 · |t| [1])	

1) |t| = Temperature absolute value in °C

To obtain the maximum tolerances in °F, multiply the results in °C by a factor of 1.8.

Temperature ranges

Sensor type [1]	Operating temperature range	Class B	Class A	Class AA
Pt100 (WW)	−200 to +600 °C (−328 to +1 112 °F)	−200 to +600 °C (−328 to +1 112 °F)	−100 to +450 °C (−148 to +842 °F)	−50 to +250 °C (−58 to +482 °F)
Pt100 (TF) Basic	−50 to +200 °C (−58 to +392 °F)	−50 to +200 °C (−58 to +392 °F)	−30 to +200 °C (−22 to +392 °F)	-
Pt100 (TF) Standard	−50 to +400 °C (−58 to +752 °F)	−50 to +400 °C (−58 to +752 °F)	−30 to +250 °C (−22 to +482 °F)	0 to +150 °C (+32 to +302 °F)
Pt100 (TF) iTHERM QuickSens	−50 to +200 °C (−58 to +392 °F)	−50 to +200 °C (−58 to +392 °F)	−30 to +200 °C (−22 to +392 °F)	0 to +150 °C (+32 to +302 °F)
Pt100 (TF) iTHERM StrongSens	−50 to +500 °C (−58 to +932 °F)	−50 to +500 °C (−58 to +932 °F)	−30 to +300 °C (−22 to +572 °F)	0 to +150 °C (+32 to +302 °F)

1) Options depend on product and configuration

Influence of ambient temperature

Depends on the head transmitter used. For details, see the Technical Information.

Self-heating

RTD elements are passive resistors that are measured using an external current. This measurement current causes a self-heating effect in the RTD element itself which in turn creates an additional measurement error. In addition to the measurement current, the size of the measurement error is also affected by the temperature conductivity and flow velocity of the process. This self-heating error is negligible if an Endress+Hauser iTEMP temperature transmitter (very small measurement current) is connected.

Response time

Tests have been performed in water at 0.4 m/s (according to IEC 60751) and with a 10 K temperature change.

Pipe diameter	Shape of tip	1x Pt100 thin-film sensor	
		Response time	
		t_{50}	t_{90}
Ø6 mm (¼ in)	Straight	5 s	15.5 s
	Reduced 4.5 mm (0.18 in) x 18 mm (0.71 in)	3.5 s	9 s
Ø8 mm (0.31 in)	Reduced 5.3 mm (0.21 in) x 20 mm (0.79 in)	5 s	10.5 s

Response time without transmitter.

Calibration

Calibration of thermometers

Calibration refers to the comparison between the display of a piece of measuring equipment and the true value of a variable provided by the calibration standard under defined conditions. The aim is to determine the deviation or measurement errors of the UUT from the true value of the measured variable. For thermometers, calibration is usually only performed on the inserts. This checks only the deviation of the sensor element caused by the insert design. However, in most applications, the deviations caused by the design of the measuring point, integration into the process, the influence of ambient conditions, and other factors are significantly greater than the deviations related to the insert. Calibration of inserts is generally carried out using two methods:

- Calibration at fixed points, e.g. at the freezing point of water at 0 °C,
- Calibration compared against a precise reference thermometer.

The thermometer to be calibrated must display either the fixed point temperature or the temperature of the reference thermometer as accurately as possible. Temperature-controlled calibration baths with very homogeneous thermal values, or special calibration furnaces are typically used for thermometer calibrations. The measurement uncertainty may increase due to heat conduction errors and short immersion lengths. The existing measurement uncertainty is recorded on the individual calibration certificate. For accredited calibrations in accordance with ISO 17025, a measurement uncertainty that is twice as high as the accredited measurement uncertainty is not permitted. If this limit is exceeded, only a factory calibration is possible.

Sensor-transmitter-matching

The resistance/temperature curve of platinum resistance thermometers is standardized but in practice it is rarely possible to keep to the values precisely over the entire operating temperature range. For this reason, platinum resistance sensors are divided into tolerance classes, such as Class A, AA or B as per IEC 60751. These tolerance classes describe the maximum permissible deviation of the specific sensor characteristic curve from the standard curve, i.e. the maximum temperature-dependent characteristic error that is permitted. The conversion of measured sensor resistance values to temperatures in temperature transmitters or other meter electronics is often susceptible to considerable errors as the conversion is generally based on the standard characteristic curve.

When Endress+Hauser iTEMP temperature transmitters are used, this conversion error can be reduced significantly by sensor-transmitter-matching:
- Calibration at three temperatures at least and determination of the actual temperature sensor characteristic curve,
- Adjustment of the sensor-specific polynomial function using Calendar-van Dusen (CvD) coefficients
- Configuration of the temperature transmitter with the sensor-specific CvD coefficients for resistance/temperature conversion, and
- another calibration of the reconfigured temperature transmitter with connected resistance thermometer.

Endress+Hauser offers its customers this kind of sensor-transmitter matching as a separate service. Furthermore, the sensor-specific polynomial coefficients of platinum resistance thermometers are always provided on every Endress+Hauser calibration certificate where possible, e.g. at least three calibration points, so that users themselves can also appropriately configure suitable temperature transmitters.

For the device, Endress+Hauser offers standard calibrations at a reference temperature of −80 to +600 °C (−112 to +1 112 °F) based on the ITS90 (International Temperature Scale). Calibrations in other temperature ranges are available from an Endress+Hauser sales center on request. Calibrations are traceable to national and international standards. The calibration certificate is referenced to the serial number of the device. Only the insert is calibrated.

Minimum immersion length (IL) for inserts required to perform a correct calibration

Due to the limitations of furnace geometries, the minimum immersion lengths must be observed at high temperatures to enable a calibration to be performed with an acceptable degree of measurement uncertainty. The same applies when using a head transmitter. Due to heat conduction, minimum lengths must be observed in order to guarantee the functionality of the transmitter −40 to +85 °C (−40 to +185 °F).

Calibration temperature	Minimum immersion length IL in mm without head transmitter
−196 °C (−320.8 °F)	120 mm (4.72 in) [1]
−80 to +250 °C (−112 to +482 °F)	No minimum immersion length required [2]
+251 to +550 °C (+483.8 to +1 022 °F)	300 mm (11.81 in)
+551 to +600 °C (+1 023.8 to +1 112 °F)	400 mm (15.75 in)

1) With iTEMP head transmitter min. 150 mm (5.91 in) is required
2) at a temperature of +80 to +250 °C (+176 to +482 °F), the iTEMP head transmitter requires min. 50 mm (1.97 in)

Insulation resistance

Insulation resistance ≥ 100 MΩ at ambient temperature, measured between the terminals and the outer jacket with a minimum voltage of 100 V_{DC}.

Installation

Orientation

No restrictions once self-draining is guaranteed in the process. If there is an opening to detect leaks at the process connection, this opening must be at the lowest possible point.

Installation instructions

The immersion length of the thermometer can influence the measurement accuracy. If the immersion length is too small, then measurement errors are caused by heat conduction via the process connection and the container wall. For installation in a pipe, an immersion length is therefore recommended that ideally corresponds to half the pipe diameter.

- Installation options: Pipes, tanks or other plant components
- To minimize the heat conduction error, a minimum immersion length, which corresponds to the calibration, is recommended depending on the type of sensor used.

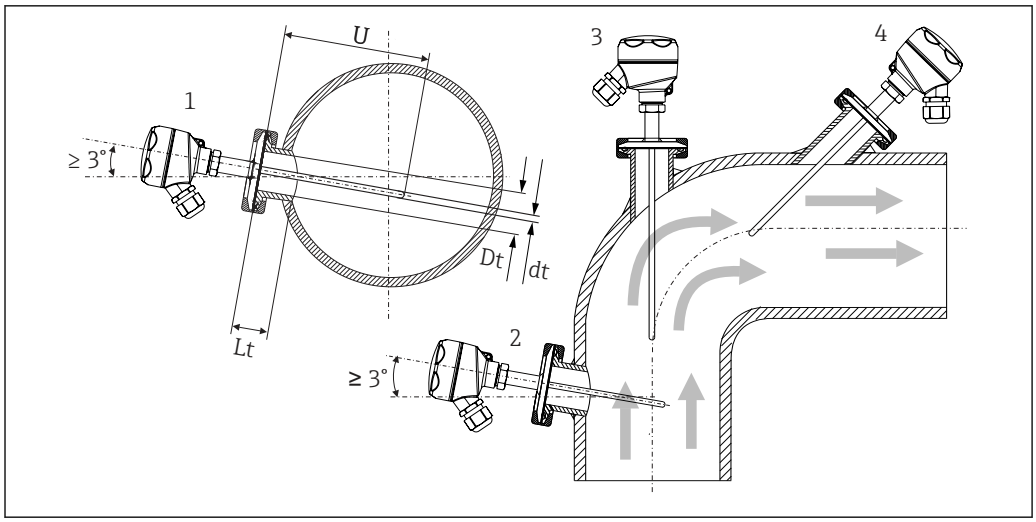

6 *Installation examples*

1, 2 Perpendicular to the flow direction, installed at a min. angle of 3° to ensure self-draining
3 On elbows
4 Inclined installation in pipes with a small nominal diameter
U Immersion length

In the case of pipes with a small nominal diameter, it is advisable for the tip of the thermometer to project well into the process so that it extends past the pipe axis (2 and 3).

Installation at an angle (4) could be another solution. When determining the immersion length or installation depth, all the parameters of the thermometer and of the medium to be measured must be taken into account (e.g. flow velocity, process pressure).

The requirements of the EHEDG and the 3-A Sanitary Standard must be adhered to.

Installation instructions EHEDG/cleanability: Lt ≤ (Dt-dt)

Installation instructions 3-A/cleanability: Lt ≤ 2(Dt-dt)

Pay attention to the exact position of the sensor element in the thermometer tip.

Available options depend on product and configuration.

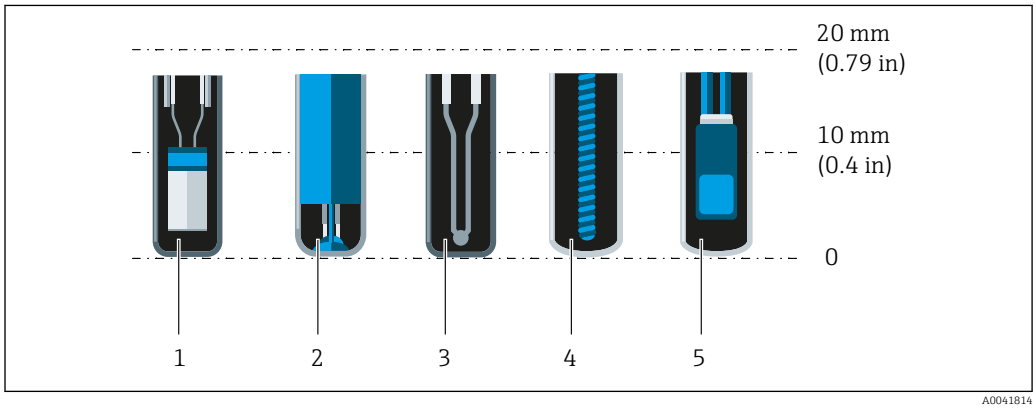

1 iTHERM StrongSens or iTHERM TrustSens for 5 to 7 mm (0.2 to 0.28 in)
2 iTHERM QuickSens for 0.5 to 1.5 mm (0.02 to 0.06 in)
3 Thermocouple (not grounded) for 3 to 5 mm (0.12 to 0.2 in)
4 Wire-wound sensor for 5 to 20 mm (0.2 to 0.79 in)
5 Standard thin-film sensor for 5 to 10 mm (0.2 to 0.39 in)

To minimize the heat dissipation, 20 to 25 mm of the sensor should extend into the medium beyond the sensor element.

This results in the following recommended minimum immersion lengths:
- iTHERM TrustSens or iTHERM StrongSens 30 mm (1.18 in)
- iTHERM QuickSens 25 mm (0.98 in)
- Wire wound sensor 45 mm (1.77 in)
- Standard thin-film sensor 35 mm (1.38 in)

Special consideration should be given to tee thermowells, as the immersion length is very short on account of their design, and the measurement error is higher as a result. It is therefore recommended to use elbow thermowells with iTHERM QuickSens sensors.

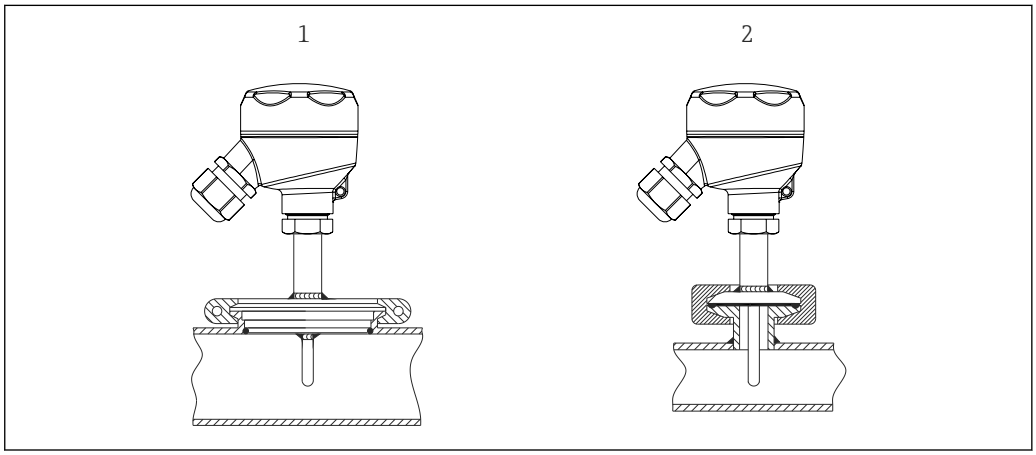

7 *Process connections for thermometer installation in pipes with small nominal diameters*

1 Varivent - process connection D = 50 mm for DN25 pipes
2 Clamp or microclamp

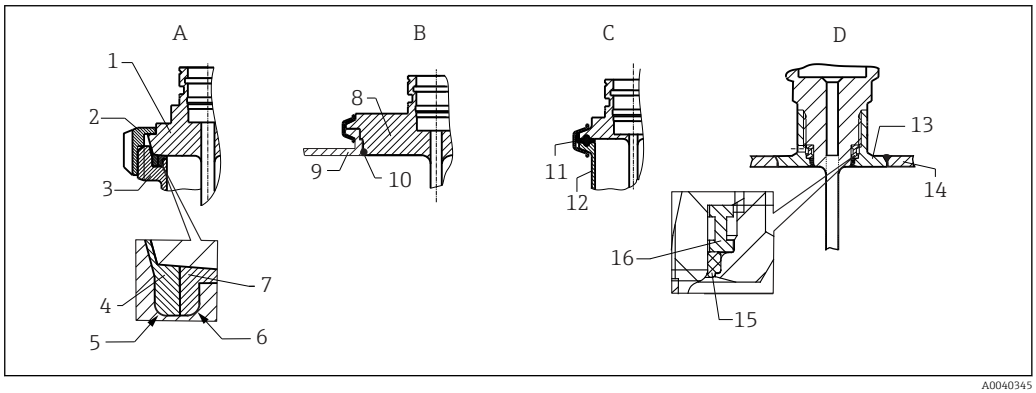

8 *Versions for hygiene-compliant installation (depends on the version ordered)*

A Dairy fitting according to DIN 11851, only in connection with EHEDG-certified and self-centering sealing ring
1 Sensor with dairy fitting
2 Groove slip-on nut
3 Counterpart connection
4 Centering ring
5 R0.4
6 R0.4
7 Sealing ring
B Varivent process connection for VARINLINE housing
8 Sensor with Varivent connection
9 Counterpart connection
10 O-ring
C Clamp according to DIN 32676
11 Molded seal
12 Counterpart connection
D Liquiphant M G1" process connection, horizontal installation
13 Weld-in adapter
14 Vessel wall
15 O-ring
16 Thrust collar

NOTICE

The following action must be taken if a sealing ring or O-ring fails:

- Remove the thermometer.
- Clean the thread and the O-ring joint or sealing surface.
- Replace the O-ring or sealing ring.
- Perform CIP after installation.

The counterpieces for the process connections and the seals or sealing rings are not supplied with the thermometer. Liquiphant M weld-in adapters with associated seal kits are available as accessories. → 33.

In the case of weld-in connections, exercise care when performing the welding work on the process side:

1. Use suitable welding material.
2. Flush-weld or weld with welding radius ≥ 3.2 mm (0.13 in).
3. Avoid crevices, folds or gaps.
4. Ensure the surface is honed and polished, Ra ≤ 0.76 µm (30 µin).

As a general rule, the thermometers should be installed in such a way that does not impact their ability to be cleaned (the requirements of the 3-A Sanitary Standard must be observed). The Varivent connections, Liquiphant M weld-in adapters and Ingold connections with weld-in adapters enable flush-mounted installation.

For the requirements for installation according to the EHEDG and 3-A Sanitary Standard, see the Operating Instructions for the modular hygienic thermometers (BA02023T).

Environment

Ambient temperature range

Terminal head	Temperature in °C (°F)
Without mounted head transmitter	Depends on the terminal head used and the cable gland or fieldbus connector; see "Terminal heads" section.
With mounted iTEMP head transmitter	−40 to +85 °C (−40 to +185 °F)
With mounted iTEMP head transmitter and display	−30 to +85 °C (−22 to 185 °F)

Terminal head	Temperature in °C (°F)
Without mounted head transmitter	Depends on the terminal head used and the cable gland or fieldbus connector; see "Terminal heads" section.
With mounted head transmitter	−40 to +85 °C (−40 to +185 °F)

Storage temperature

For information, see the ambient temperature.

Relative humidity

Depends on the transmitter used. If Endress+Hauser iTEMP head transmitters are used:
- Condensation permitted as per IEC 60 068-2-33
- Max. rel. humidity: 95% as per IEC 60068-2-30

Climate class

As per EN 60654-1, Class C

Degree of protection

Max. IP69K, depending on the design (terminal head, connector, etc.)

Shock and vibration resistance

The Endress+Hauser inserts meet the requirements of IEC 60751 which specify shock and vibration resistance of 3g in the range from 10 to 500 Hz. The vibration resistance at the measuring point depends on the sensor type and design, see the following table:

Version	Vibration resistance for the sensor tip
Pt100 (TF)	30 m/s² (3g)

Electromagnetic compatibility (EMC)

Depends on the head transmitter used. For details, see the Technical Information.

Process

Process temperature range

Maximum −50 to +200 °C (−58 to +392 °F)

Thermal shock

Thermal shock resistance in CIP/SIP process (temperature increase within 2 seconds from +5 to +130 °C (+41 to +266 °F)).

Process pressure range

The maximum possible process pressure depends on various influencing factors, such as the thermometer design, process connection and process temperature. For information on the maximum possible process pressures for the individual process connections, see the 'Process connection' section. → 26

It is possible to verify the mechanical loading capacity depending on the installation and process conditions using the online TW Sizing Module for thermowells in the Endress+Hauser Applicator software. See also the 'Accessories' section.

Example of the permitted flow rate as a function of the immersion length and medium

The highest flow velocity tolerated by the thermometer diminishes with increasing thermometer immersion length exposed to the stream of the fluid. In addition, it is dependent on the diameter of the thermometer tip, the medium type, the process temperature and the process pressure. The following figures exemplify the maximum permitted flow velocities in water and superheated steam at a process pressure of 40 bar (580 PSI).

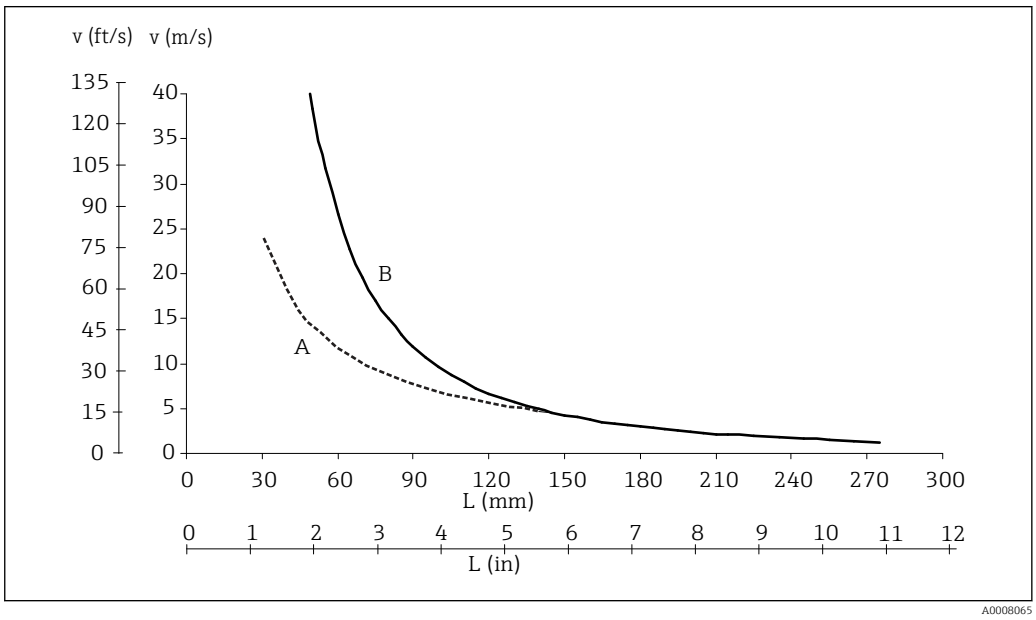

9 Permitted flow velocities, thermowell diameter 6 mm (¼ in)

A Medium water at T = 50 °C (122 °F)
B Medium superheated steam at T = 400 °C (752 °F)
L Immersion length exposed to flow
v Flow velocity

Medium - state of aggregation	Gaseous, liquid and high-viscosity substances, e.g. yogurt).

Mechanical construction

Design, dimensions

All dimensions in mm (in).

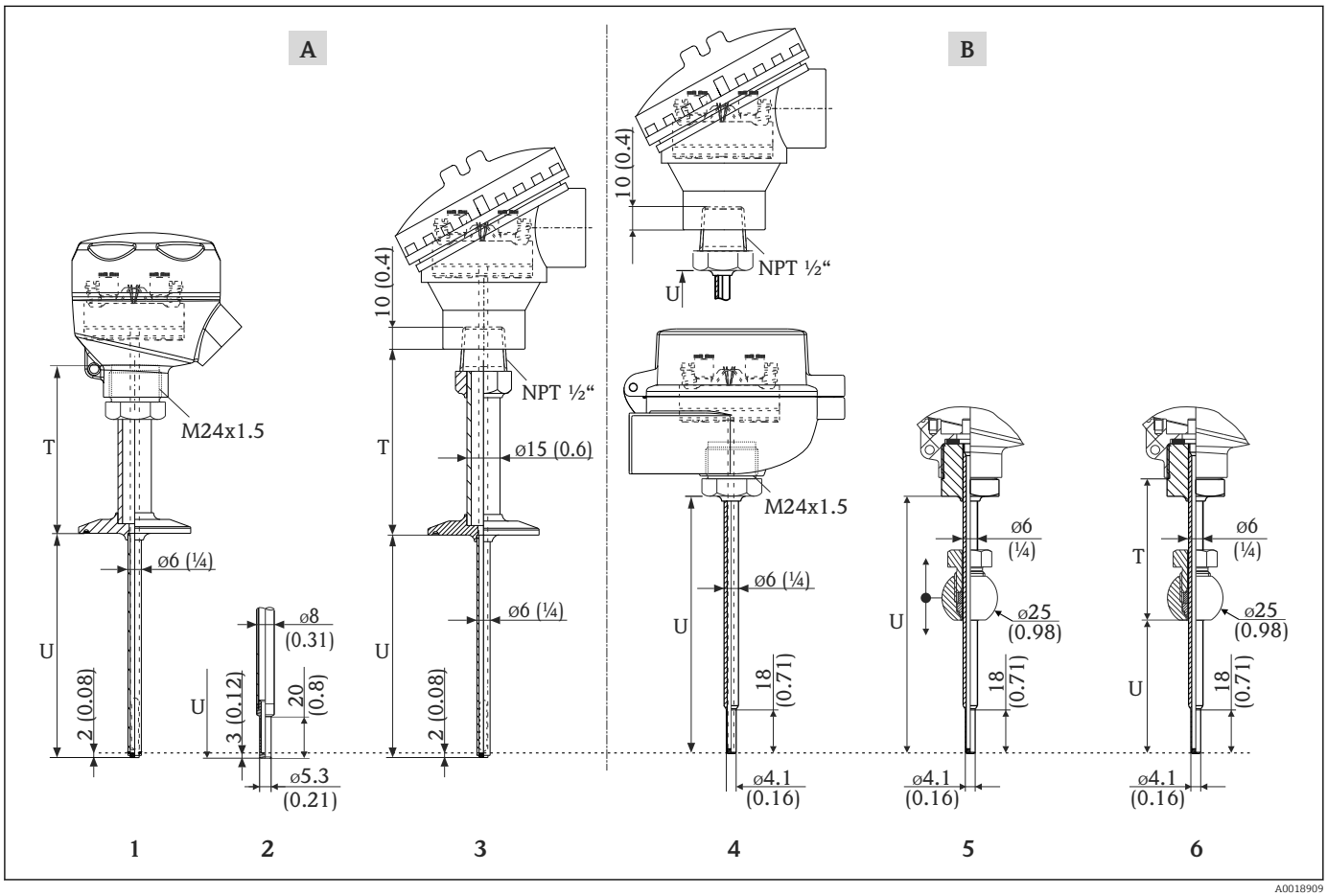

A0018909

A Version with process connection
B Version without process connection or optionally with compression fitting
1 Thermometer with process connection and M24x1.5 thread to terminal head - shape of tip Ø6 mm (0,25 in) straight or
2 Optional shape of tip: Ø6 mm (0.25 in) reduced to 5.3 mm (0.21 in) 5.3 mm (0.21 in)
3 Thermometer with process connection and NPT ½" thread to the terminal head
4 Thermometer without process connection with M24x1.5 thread (optional NPT ½" thread) to terminal head - shape of tip Ø6 mm (0.25 in) reduced
5 Thermometer with spherical, movable TK40 compression fitting for weld-in - shape of tip Ø6 mm (0.25 in) reduced
6 Thermometer with spherical, fixed TK40 compression fitting for weld-in - shape of tip Ø6 mm (0.25 in) reduced
T Length of extension neck (T = 0, for version without process connection or for version with movable compression fitting)
U Immersion length

Weight

0.5 to 2.5 kg (1 to 5.5 lbs) for standard versions.

Materials

The temperatures for continuous operation specified in the following table are only intended as reference values for use of the various materials in air and without any significant compressive load.

The maximum operating temperatures can be reduced considerably in cases where abnormal conditions such as high mechanical load occur or in aggressive media.

Name	Short formula	Recommended max. temperature for continuous use in air	Properties
AISI 316L (corresponds to 1.4404 or 1.4435)	X2CrNiMo17-13-2, X2CrNiMo18-14-3	650 °C (1202 °F) [1]	▪ Austenitic stainless steel ▪ High corrosion resistance in general ▪ Particularly high corrosion resistance in chlorine-based and acidic, non-oxidizing atmospheres through the addition of molybdenum (e.g. phosphoric and sulfuric acids, acetic and tartaric acids with a low concentration) ▪ Increased resistance to intergranular corrosion and pitting ▪ The wetted part is a thermowell made of 316L or 1.4435+316L passivated with 3% sulfuric acid.

1) Can be used to a limited extent up to 800 °C (1472 °F) for low compressive loads and in non-corrosive media. Contact your Endress+Hauser sales team for further information.

Surface roughness

Values for wetted surfaces:

Standard surface, mechanically polished [1]	$R_a \leq 0.76$ µm (30 µin)
Mechanically polished, buffed [2]	$R_a \leq 0.38$ µm (15 µin)

1) Or any other finishing method that meets the R_a max
2) Not compliant with ASME BPE

Terminal heads

All terminal heads have an internal shape and size in accordance with DIN EN 50446, flat face, and a thermometer connection with a M24x1.5 or ½" NPT thread. All dimensions in mm (in). The sample cable glands in the diagrams correspond to M20x1.5 connections with non-Ex polyamide cable glands. Specifications without head transmitter installed. For ambient temperatures with head transmitter installed, see the 'Environment' section. → 🖹 20

As a special feature, Endress+Hauser offers terminal heads with optimized terminal accessibility for easy installation and maintenance.

TA30A	Specification
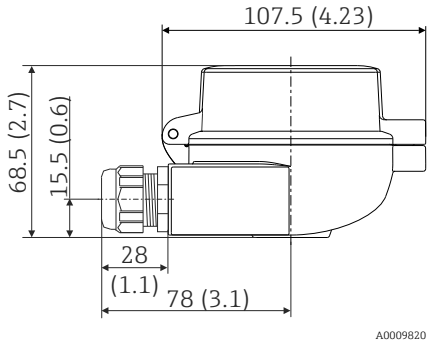	▪ Protection degree: ▪ IP66/68 (NEMA Type 4x encl.) ▪ For ATEX: IP66/67 ▪ Temperature: −50 to +150 °C (−58 to +302 °F) without cable gland ▪ Material: aluminum, polyester powder coated Seals: silicone ▪ Threaded cable entry: G ½", NPT ½" and M20x1.5; ▪ Head color: blue, RAL 5012 ▪ Cap color: gray, RAL 7035 ▪ Weight: 330 g (11.64 oz) ▪ Ground terminal, internal and external ▪ Available with sensors with 3-A® symbol

TA30R	Specification
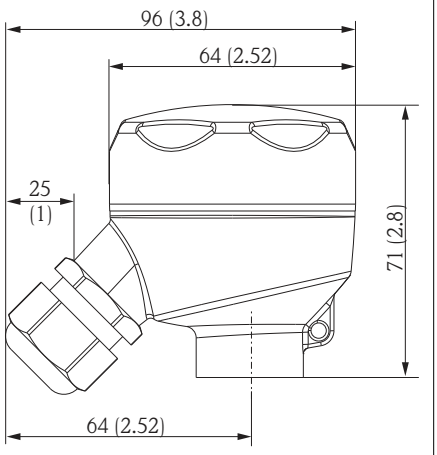	▪ Degree of protection - standard version: IP69K (NEMA Type 4x encl.) ▪ Temperature: −50 to +130 °C (−58 to +266 °F) without cable gland ▪ Material: stainless steel 316L, abrasive-blasted or polished Seals: EPDM ▪ Cable entry thread ½" NPT and M20x1.5 ▪ Weight: 360 g (12.7 oz) ▪ Protection armature connection: M24x1.5 or ½" NPT ▪ Ground terminal: internal as standard ▪ Not allowed for Class II and III applications ▪ Available with 3-A marked sensors

TA30S	Specification
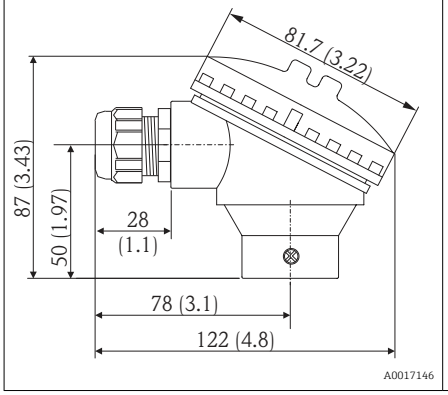	▪ Degree of protection: IP65 (NEMA Type 4x encl.) ▪ Temperature: −40 to +85 °C (−40 to +185 °F) without cable gland ▪ Material: polypropylene (PP), FDA-compliant, seals: O-ring EPDM ▪ Cable entry thread: ¾" NPT (with adapter for ½" NPT), M20x1.5 ▪ Protective assembly connection: ½" NPT ▪ Color: white ▪ Weight: approx. 100 g (3.5 oz) ▪ Ground terminal: only internal via auxiliary terminal ▪ Not allowed for Class II and III applications ▪ Available with 3-A marked sensors

Cable glands and connectors [1)]

Type	Suitable for cable entry	Degree of protection	Temperature range	Suitable cable diameter
Cable gland, polyamide blue (indication of Ex-i circuit)	½" NPT	IP68	−30 to +95 °C (−22 to +203 °F)	7 to 12 mm (0.27 to 0.47 in)
Cable gland, polyamide	½" NPT, ¾" NPT, M20x1.5 (optionally 2x cable entry)	IP68	−40 to +100 °C (−40 to +212 °F)	5 to 9 mm (0.19 to 0.35 in)
	½" NPT, M20x1.5 (optionally 2x cable entry)	IP69K	−20 to +95 °C (−4 to +203 °F)	
Cable gland for dust ignition-proof area, polyamide	½" NPT, M20x1.5	IP68	−20 to +95 °C (−4 to +203 °F)	
Cable gland for dust ignition-proof area, nickel-plated brass	M20x1.5	IP68 (NEMA Type 4x)	−20 to +130 °C (−4 to +266 °F)	
M12 plug, 4-pin, 316 (PROFIBUS® PA, Ethernet-APL™, IO-Link®	½" NPT, M20x1.5	IP67	−40 to +105 °C (−40 to +221 °F)	-

Type	Suitable for cable entry	Degree of protection	Temperature range	Suitable cable diameter
M12 plug, 8-pin, 316	M20x1.5	IP67	−30 to +90 °C (−22 to +194 °F)	-
7/8" plug, 4-pin, 316 (FOUNDATION ™ Fieldbus, PROFIBUS® PA)	½" NPT, M20x1.5	IP67	−40 to +105 °C (−40 to +221 °F)	-

1) Depending on product and configuration

Cable glands are not available for encapsulated, flameproof thermometers.

Process connections All dimensions in mm (in).

Releasable process connection

Type	Technical properties
Sanitary connection according to DIN 11851 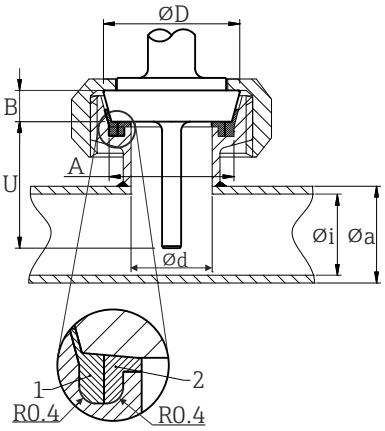 A0009561 *1 Centering ring* *2 Sealing ring*	▪ 3-A marked and EHEDG certified (only with EHEDG-certified and self-centering sealing ring). ▪ ASME BPE compliance

Version [1]	Dimensions					$P_{max.}$
	ϕD	A	B	ϕi	ϕa	
DN25	44 mm (1.73 in)	30 mm (1.18 in)	10 mm (0.39 in)	26 mm (1.02 in)	29 mm (1.14 in)	40 bar (580 psi)
DN32	50 mm (1.97 in)	36 mm (1.42 in)	10 mm (0.39 in)	32 mm (1.26 in)	35 mm (1.38 in)	40 bar (580 psi)
DN40	56 mm (2.2 in)	42 mm (1.65 in)	10 mm (0.39 in)	38 mm (1.5 in)	41 mm (1.61 in)	40 bar (580 psi)
DN50	68 mm (2.68 in)	54 mm (2.13 in)	11 mm (0.43 in)	50 mm (1.97 in)	53 mm (2.1 in)	25 bar (363 psi)

1) Pipes in accordance with DIN 11850

Type	Version [1]	Dimensions		Technical properties	Conformity
	ϕd [2]	ϕD	ϕa		
Clamp according to DIN 32676 [3] 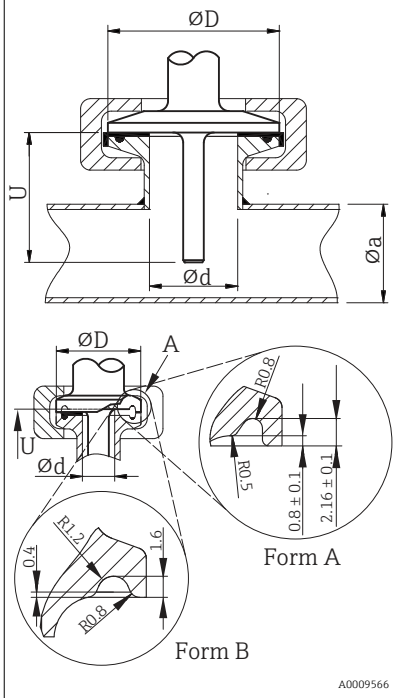 Form A: In compliance with ASME BPE Type A Form B: In compliance with ASME BPE Type B and DIN 32676	Microclamp [4] DN8 (0.5"), Form A	25 mm (0.98 in)	-	▪ $P_{max.}$ = 16 bar (232 psi), depends on clamp ring and suitable seal ▪ With 3-A symbol	-
	Tri-clamp DN8 (0.5"), Form B		-		DIN 32676 [5]
	Clamp DN10-20, Form B	34 mm (1.34 in)	16 to 25.3 mm (0.63 to 0.99 in)		DIN 32676
	Clamp DN25-40 (1"-1.5"), Form B	50.5 mm (1.99 in)	29 to 42.4 mm (1.14 to 1.67 in)	▪ $P_{max.}$ = 16 bar (232 psi), depends on clamp ring and suitable seal ▪ 3-A marked and EHEDG certified (in connection with Combifit seal) ▪ Can be used with 'Novaseptic Connect (NA Connect)' which enables flush-mount installation	ASME BPE Type B; DIN 32676
	Clamp DN50 (2"), Form B	64 mm (2.52 in)	44.8 to 55.8 mm (1.76 to 2.2 in)		ASME BPE Type B; DIN 32676
	Clamp DN63.5 (2.5"), Form B	77.5 mm (3.05 in)	68.9 to 75.8 mm (2.71 to 2.98 in)		ASME BPE Type B; DIN 32676
	Clamp DN70-76.5 (3"), Form B	91 mm (3.58 in)	> 75.8 mm (2.98 in)		ASME BPE Type B; DIN 32676

1) Options depend on product and configuration
2) Pipes in accordance with ISO 2037 and BS 4825 Part 1
3) replaces ISO 2852
4) Microclamp (not contained in DIN 32676); no standard pipes
5) Groove diameter = 20 mm

Type	Version [1]	Technical properties
Metal sealing system		
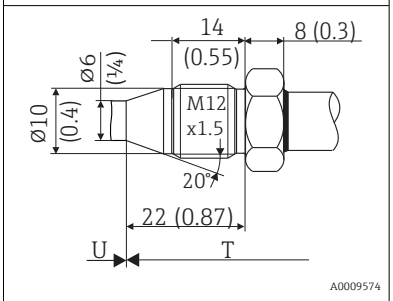 *10 M12x1.5*	Thermowell diameter 6 mm (¼ in)	$P_{max.}$ = 16 bar (232 psi) Maximum torque = 10 Nm (7.38 lbf ft)
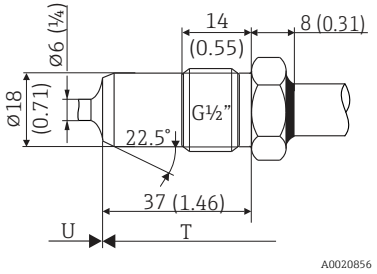 *11 G½"*		
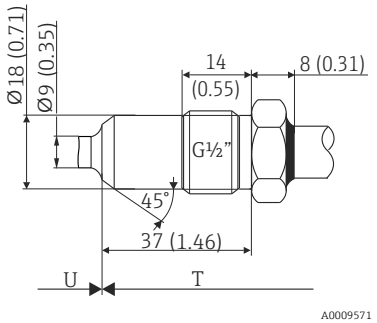	Thermowell diameter 9 mm (0.35 in)	$P_{max.}$ = 16 bar (232 psi) Maximum torque = 10 Nm (7.38 lbf ft)
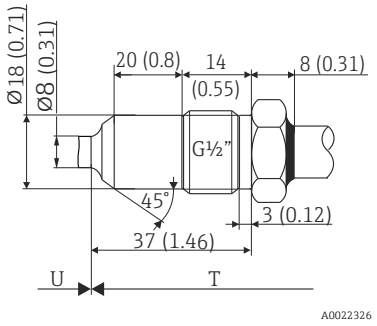	Thermowell diameter 8 mm (0.31 in)	$P_{max.}$ = 16 bar (232 psi) Maximum torque = 10 Nm (7.38 lbf ft)

1) Options depend on product and configuration

Type	Version G	Dimensions			Technical properties
		L1 thread length	A	1 (SW/AF)	
Thread according to ISO 228 (for Liquiphant weld-in adapter) 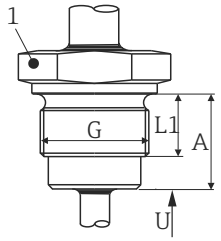	G¾" for FTL20/31/33 adapter	16 mm (0.63 in)	25.5 mm (1 in)	32	▪ $P_{max.}$ = 25 bar (362 psi) at max. 150 °C (302 °F) ▪ $P_{max.}$ = 40 bar (580 psi) at max. 100 °C (212 °F) ▪ For more information about hygienic compliance in conjunction with FTL31/33/50 adapters, see Technical Information TI00426F.
	G¾" for FTL50 adapter				
	G1" for FTL50 adapter	18.6 mm (0.73 in)	29.5 mm (1.16 in)	41	

Type	Version [1]	Dimensions				Technical properties	
		⌀D	⌀A	⌀B	h	$P_{max.}$	
Varivent® 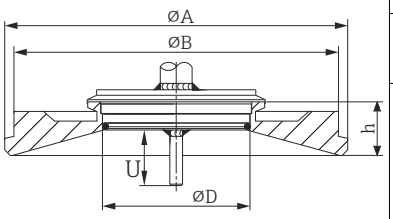	Type B	31 mm (1.22 in)	105 mm (4.13 in)	-	22 mm (0.87 in)	10 bar (145 psi)	▪ With 3-A symbol and EHEDG certification ▪ ASME BPE compliance
	Type F	50 mm (1.97 in)	145 mm (5.71 in)	135 mm (5.31 in)	24 mm (0.95 in)		
	Type N	68 mm (2.67 in)	165 mm (6.5 in)	155 mm (6.1 in)	24.5 mm (0.96 in)		

The VARINLINE® housing connection flange is suitable for welding into the conical or torispherical head in tanks or containers with a small diameter (≤ 1.6 m (5.25 ft)) and up to a wall thickness of 8 mm (0.31 in).
Varivent® Type F cannot be used for installations in pipes in combination with the VARINLINE® housing connection flange.

1) Options depend on product and configuration

Type	Technical properties
Varivent® for VARINLINE® housing for installation in pipes 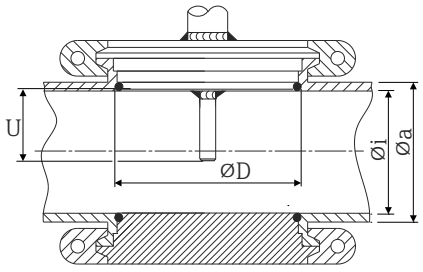	▪ With 3-A symbol and EHEDG certification ▪ ASME BPE compliance

Version [1]	Dimensions			$P_{max.}$
	⌀D	⌀i	⌀a	
Type N, according to DIN 11866, series A	68 mm (2.67 in)	DN40: 38 mm (1.5 in)	DN40: 41 mm (1.61 in)	DN40 to DN65: 16 bar (232 psi)
		DN50: 50 mm (1.97 in)	DN50: 53 mm (2.1 in)	
		DN65: 66 mm (2.6 in)	DN65: 70 mm (2.76 in)	
		DN80: 81 mm (3.2 in)	DN80: 85 mm (3.35 in)	DN80 to DN150: 10 bar (145 psi)
		DN100: 100 mm (3.94 in)	DN100: 104 mm (4.1 in)	
		DN125: 125 mm (4.92 in)	DN125: 129 mm (5.08 in)	
		DN150: 150 mm (5.9 in)	DN150: 154 mm (6.06 in)	

Type				Technical properties
Type N, according to EN ISO 1127, series B	68 mm (2.67 in)	38.4 mm (1.51 in)	42.4 mm (1.67 in)	42.4 mm (1.67 in) to 60.3 mm (2.37 in): 16 bar (232 psi)
		44.3 mm (1.75 in)	48.3 mm (1.9 in)	
		56.3 mm (2.22 in)	60.3 mm (2.37 in)	
		72.1 mm (2.84 in)	76.1 mm (3 in)	76.1 mm (3 in) to 114.3 mm (4.5 in): 10 bar (145 psi)
		82.9 mm (3.26 in)	42.4 mm (3.5 in)	
		108.3 mm (4.26 in)	114.3 mm (4.5 in)	
Type N, according to DIN 11866, series C	68 mm (2.67 in)	OD 1½": 34.9 mm (1.37 in)	OD 1½": 38.1 mm (1.5 in)	OD 1½" to OD 2½": 16 bar (232 psi)
		OD 2": 47.2 mm (1.86 in)	OD 2": 50.8 mm (2 in)	
		OD 2½": 60.2 mm (2.37 in)	OD 2½": 63.5 mm (2.5 in)	
Type N, according to DIN 11866, series C	68 mm (2.67 in)	OD 3": 73 mm (2.87 in)	OD 3": 76.2 mm (3 in)	OD 3" to OD 4": 10 bar (145 psi)
		OD 4": 97.6 mm (3.84 in)	OD 4": 101.6 mm (4 in)	
Type F, according to DIN 11866, series C	50 mm (1.97 in)	OD 1": 22.2 mm (0.87 in)	OD 1": 25.4 mm (1 in)	16 bar (232 psi)

1) Options depend on product and configuration

Model	Type of fitting	Dimensions			Technical properties
		ØD	ØA	h	
SMS 1147 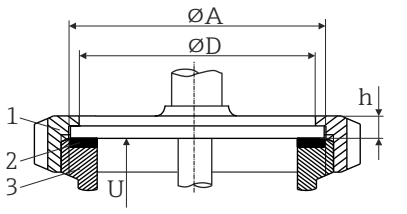 *1 Cap nut* *2 Sealing ring* *3 Counterpart connection*	DN25	32 mm (1.26 in)	35.5 mm (1.4 in)	7 mm (0.28 in)	$P_{max.}$ = 6 bar (87 psi)
	DN38	48 mm (1.89 in)	55 mm (2.17 in)	8 mm (0.31 in)	
	DN51	60 mm (2.36 in)	65 mm (2.56 in)	9 mm (0.35 in)	
The counterpart connection must fit the sealing ring and fix it in place.					

The 316L compression fittings can only be used once due to deformation. This applies to all the compression fitting components. A replacement compression fitting must be secured at another point (grooves in thermowell).

PEEK compression fittings must never be used at a temperature that is lower than the temperature present when the compression fitting is secured. This is because the fitting would no longer be leak-tight as a result of heat contraction of the PEEK material.

SWAGELOK or similar fittings are strongly recommended for higher requirements.

Compression fitting

Model	Type of fitting [1]	Dimensions			Technical properties [2]
	Spherical or cylindrical	Ødi	ØD	h	
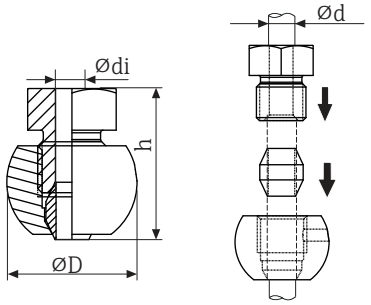	Spherical Sealing taper material 316L	6.3 mm (0.25 in) [3]	25 mm (0.98 in)	33 mm (1.3 in)	▪ $P_{max.}$ = 50 bar (725 psi) ▪ $T_{max.}$ for 316L sealing taper = +200 °C (+392 °F), tightening torque = 40 Nm
Compression fitting TK40 for weld-in 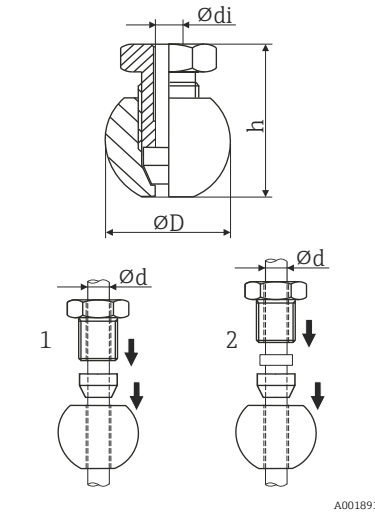 *1 Movable* *2 Fixed*	Spherical Sealing taper material PEEK Thread G¼"	6.3 mm (0.25 in) [3]	25 mm (0.98 in)	33 mm (1.3 in)	▪ $P_{max.}$ = 10 bar (145 psi) ▪ $T_{max.}$ for PEEK sealing taper = +200 °C (+392 °F), tightening torque = 10 Nm ▪ The TK40 PEEK sealing taper is EHEDG tested and 3-A marked
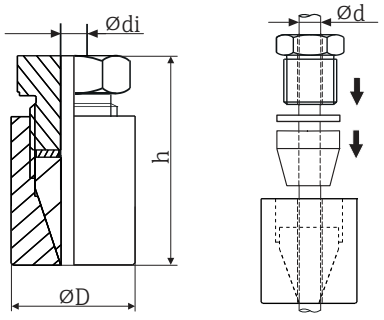	Cylindrical Material of sealing taper ELASTOSIL® Thread G½"	6.2 mm (0.24 in) [3] 9.2 mm (0.36 in)	30 mm (1.18 in)	57 mm (2.24 in)	▪ $P_{max.}$ = 10 bar (145 psi) ▪ $T_{max.}$ for ELASTOSIL® sealing taper = +200 °C (+392 °F), tightening torque = 5 Nm ▪ The Elastosil® compression fitting is EHEDG tested and 3-A marked

1) Options depend on product and configuration
2) All the pressure specifications apply for cyclic temperature load
3) For insert or thermowell diameter Ød = 6 mm (0.236 in).

Minimum extension neck lengths, dependent on respective process connection

Process connection	Extension next length T
▪ None ▪ Compression fitting, movable	Predefined (cannot be selected, T = 0)
▪ Thread according to ISO 228 ▪ Compression fitting, fixed ▪ Metal sealing system	≥82 mm (3.23 in)
▪ Clamp according to DIN 32676 ▪ Dairy fitting according to DIN 11851 ▪ Varivent® ▪ SMS 1147	≥55 mm (2.17 in)

Certificates and approvals

Current certificates and approvals for the product are available at www.endress.com on the relevant product page:

1. Select the product using the filters and search field.
2. Open the product page.
3. Select **Downloads**.

Materials in contact with food/product (FCM)

The materials of the thermometer in contact with food/product (FCM) comply with the following European regulations:
- (EC) No. 1935/2004, Article 3, paragraph 1, Articles 5 and 17 on materials and articles intended to come into contact with food.
- (EC) No. 2023/2006 on good manufacturing practice for materials and articles intended to come into contact with food.
- (EU) No. 10/2011 on plastic materials and articles intended to come into contact with food.
- EHEDG certification, type EL CLASS I. EHEDG-certified/tested process connections. → 🖹 26
- 3-A authorization no. 1144, 3-A Sanitary Standard 74-07. Listed process connections. → 🖹 26
- ASME BPE (latest edition), certificate of conformity can be ordered for indicated options.
- FDA-compliant
- All surfaces in contact with the medium are free of animal derived ingredients (ADI/TSE) and do not contain any materials derived from bovine or animal sources.

CRN approval

The CRN approval is only available for certain thermowell versions. These versions are identified and displayed accordingly during the configuration of the device.

Detailed ordering information is available for your nearest sales organization www.addresses.endress.com or in the Download Area under www.endress.com :

1. Select the country
2. Select Downloads
3. In the search area: select Approvals/approval type
4. Enter the product code or device
5. Start the search

Surface purity

Free from oil and grease for O_2 applications, optional

Material resistance

Material resistance - including resistance of housing - to the following Ecolab cleaning/disinfection agents:
- P3-topax 66
- P3-topactive 200
- P3-topactive 500
- P3-topactive OKTO
- And demineralized water

Ordering information

Detailed ordering information is available from your nearest sales organization www.addresses.endress.com or in the Product Configurator at www.endress.com:

1. Select the product using the filters and search field.
2. Open the product page.
3. Select **Configuration**.

Product Configurator - the tool for individual product configuration
- Up-to-the-minute configuration data
- Depending on the device: direct input of information specific to the measuring point, such as the measuring range or operating language
- Automatic verification of exclusion criteria
- Automatic creation of the order code and its breakdown in PDF or Excel output format
- Ability to order directly in the Endress+Hauser Online Shop

Accessories

The accessories currently available for the product can be selected at www.endress.com:

1. Select the product using the filters and search field.
2. Open the product page.
3. Select **Spare parts & Accessories**.

Device-specific accessories

Accessory	Description
Welding boss with sealing taper (metal - metal) 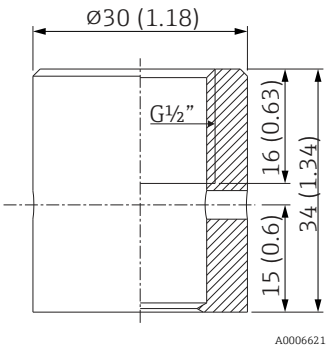 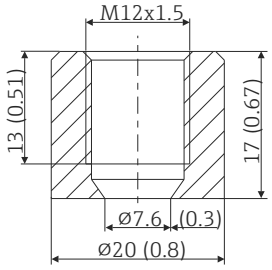	Welding boss for G½" and M12x1.5 thread Metal-sealing; conical Material of wetted parts: 316L/1.4435 Max. process pressure 16 bar (232 PSI) **Order number:** ▪ 71424800 (G½") ▪ 71405560 (M12x1.5)
Dummy plug 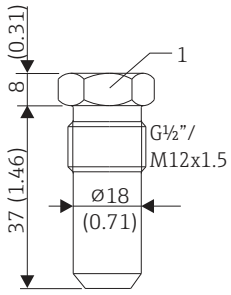 *1 Size across flats AF22*	Dummy plug for G½" or M12x1.5 conical metal-sealing welding boss Material: SS 316L/1.4435 **Order number:** ▪ 71424800 (G½") ▪ 71535692 (M12x1.5)

Weld-in adapter for Ingold process connection (OD25 mm (0.98 in)x50 mm (1.97 in) 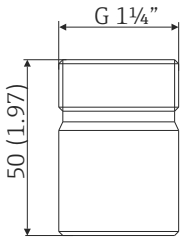	Material of wetted parts: 316L/1.4435 Weight: 0.32 kg (0.7 lb) Adapter for Ingold process connection with 3.1 material certificate, **order number:** 71531585 Adapter for Ingold process connection, **order number:** 71531588 O-ring seal set ▪ Silicone O-ring in accordance with FDA CFR 21 ▪ Maximum temperature: 230 °C (446 °F) ▪ **Order number:** 71220351

Weld-in adapter

For detailed information about the order code and hygienic compliance of the adapters and spare parts, see the Technical Information (TI00426F).

Weld-in adapter	Material	Roughness µm (µin) process side
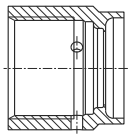 A0008246 **G ¾, d=29 pipe-mounting**	316L (1.4435)	≤1.5 (59.1)
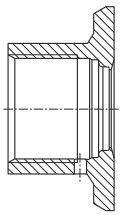 A0008251 **G ¾, d=50 vessel-mounting**	316L (1.4435)	≤0.8 (31.5)
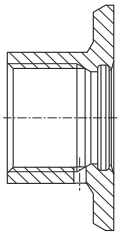 A0008256 **G ¾", d=55, with flange**	316L (1.4435)	≤0.8 (31.5)
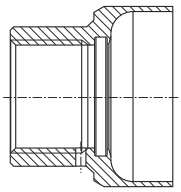 A0011924 **G 1", d=53, without flange**	316L (1.4435)	≤0.8 (31.5)

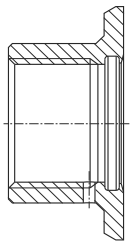 A0008248 **G 1", d=60, with flange**	316L (1.4435)	≤0.8 (31.5)
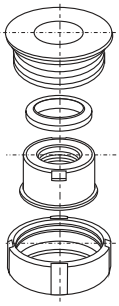 A0008253 **G 1" adjustable**	316L (1.4435)	≤0.8 (31.5)

Maximum process pressure for the weld-in adapters:
- 25 bar (362 PSI) at maximum 150 °C (302 °F)
- 40 bar (580 PSI) at maximum 100 °C (212 °F)

Service-specific accessories

Modems/Edge devices

Commubox FXA195 USB/HART modem
Connects intrinsically safe 'smart transmitters' with a HART protocol to the USB interface of a laptop/PC. This enables the remote operation of the transmitters with FieldCare.

Technical Information TI00404F

www.endress.com/fxa195

Software

DeviceCare SFE100
DeviceCare is an Endress+Hauser configuration tool for field devices using the following communication protocols: HART, PROFIBUS DP/PA, FOUNDATION Fieldbus, IO/Link, Modbus, CDI and Endress+Hauser Common Data Interfaces.

Technical Information TI01134S

www.endress.com/sfe100

FieldCare SFE500
FieldCare is a configuration tool for Endress+Hauser and third-party field devices based on DTM technology.
The following communication protocols are supported: HART, WirelessHART, PROFIBUS, FOUNDATION Fieldbus, Modbus, IO-Link, EtherNet/IP, PROFINET and PROFINET APL.

Technical Information TI00028S

www.endress.com/sfe500

Netilion
With the Netilion IIoT ecosystem, Endress+Hauser enables the optimization of plant performance, digitization of workflows, sharing of knowledge and improved collaboration. Drawing upon decades of experience in process automation, Endress+Hauser offers the process industry an IIoT ecosystem designed to effortlessly extract insights from data. These insights allow process optimization, leading to increased plant availability, efficiency, reliability and ultimately a more profitable plant.

www.netilion.endress.com

Field Xpert SMT50
Universal, high-performance tablet PC for device configuration.

Technical Information TI01555S

www.endress.com/smt50

Field Xpert SMT77 via WLAN
Universal, high-performance tablet PC for device configuration in Ex Zone 1 areas.

Technical Information TI01418S

www.endress.com/smt77

SmartBlue app
SmartBlue from Endress+Hauser allows easy wireless field device configuration via Bluetooth® or WLAN. By providing mobile access to diagnostic and process information, SmartBlue saves time, even in hazardous and difficult-to-access environments.



A0033202

12 *QR code for free Endress+Hauser SmartBlue app*

Communication-specific accessories

Configuration kit TXU10

Configuration kit for PC-programmable transmitter - FDT/DTM-based plant asset management tool, FieldCare/DeviceCare, and interface cable (4-pin connector) for PC with USB port.

For more information, please refer to: www.endress.com

Online tools

Product information about the entire life cycle of the device is available at:
www.endress.com/onlinetools

System components

Process indicators from the RIA product family

Easily readable process indicators with various functions: loop-powered indicators for displaying 4-20mA values, display of up to four HART variables, process indicators with control units, limit value monitoring, sensor power supply, and galvanic isolation.

Universal application thanks to international hazardous area approvals, suitable for panel mounting or field installation..

For more information, please refer to: www.endress.com

RN series active barrier

Single- or two-channel active barrier for safe separation of 0/4 to -20 mA standard signal circuits with bidirectional HART transmission. In the signal duplicator option, the input signal is transmitted to two galvanically isolated outputs. The device has one active and one passive current input; the outputs can be operated actively or passively.

For more information, please refer to: www.endress.com

Data Manager of the RSG product family

Data Managers are flexible and powerful systems to organize process values. Up to 20 universal inputs and up to 14 digital inputs for direct connection of sensors, optionally with HART, are available as an option. The measured process values are clearly presented on the display and logged safely, monitored for limit values and analyzed. The values can be forwarded via common communication protocols to higher-level systems and connected to one another via individual plant modules.

For more information, please refer to: www.endress.com

Documentation

The following document types are available in the Downloads area of the Endress+Hauser website (www.endress.com/downloads):

For an overview of the scope of the associated Technical Documentation, refer to the following:
- *Device Viewer* (www.endress.com/deviceviewer): Enter the serial number from the nameplate
- *Endress+Hauser Operations app*: Enter serial number from nameplate or scan matrix code on nameplate.

Brief Operating Instructions (KA)	**Guide that takes you quickly to the 1st measured value** The Brief Operating Instructions contain all the essential information from incoming acceptance to initial commissioning.
Operating Instructions (BA)	**Reference document** These Operating Instructions contain all the information that is required in the various life cycle phases of the device: from product identification, incoming acceptance and storage, to installation, connection, operation and commissioning, through to troubleshooting, maintenance and disposal.
Safety Instructions (XA)	Depending on the approval, the following Safety Instructions (XA) are supplied with the device. They are an integral part of the Operating Instructions. The nameplate indicates the Safety Instructions (XA) that are relevant to the device.
Functional Safety Manual (FY)	Depending on the SIL approval, the Functional Safety Manual (FY) is an integral part of the Operating Instructions and applies in addition to the Operating Instructions, Technical Information and ATEX Safety Instructions. The different requirements that apply for the protective function are described in the Functional Safety Manual (FY).



www.addresses.endress.com

Endress+Hauser

People for Process Automation