TI01185C/07/EN/08.24-00
71658302
2024-04-30

Technical Information
Liquiline System CA80COD

Analyzer for determining chemical oxygen demand (COD)



Integrated controller with digital Memosens technology

Application

The Liquiline System CA80COD is a wet-chemical analyzer for the almost continuous determination of the chemical oxygen demand (COD) in liquid media.

The analyzer is designed for use in the following applications:
- Monitoring of the wastewater treatment plant inlet
- Control of municipal wastewater treatment
- Monitoring of industrial wastewater
- Control of industrial wastewater treatment

The "Cabinet, outdoor version" product variant may be set up, mounted and operated outdoors.

Your benefits

- Easy upgrade to measuring station by connecting up to 4 Memosens sensors
- High-precision dosing unit
- Automatic measuring range switching within 10 to 5000 mg/l O_2
- Digital fieldbuses (e.g. PROFINET, PROFIBUS DP, Modbus TCP, Modbus RS485 and Ethernet IP) and web server

Endress+Hauser
People for Process Automation

Function and system design

Measuring principle for chemical oxygen demand

As a sum parameter, the chemical oxygen demand, or COD, describes the amount of oxygen that is needed to fully oxidize all the oxidizable substances in a sample.

To determine the chemical oxygen demand, the chloride ions in the sample must first be removed as they would interfere with the measurement result. This is done by adding mercuric sulfate. Once the chloride ions have been removed, the sample is digested at a temperature of 175 °C by adding sulfuric acid, silver sulfate and potassium dichromate. Silver sulfate acts as the catalyst here. The high temperature and potassium dichromate - a very strong oxidizing agent - ensure that the sample is digested quickly and completely. The digestion time required can be additionally shortened by the pressure reactor of the CA80COD.

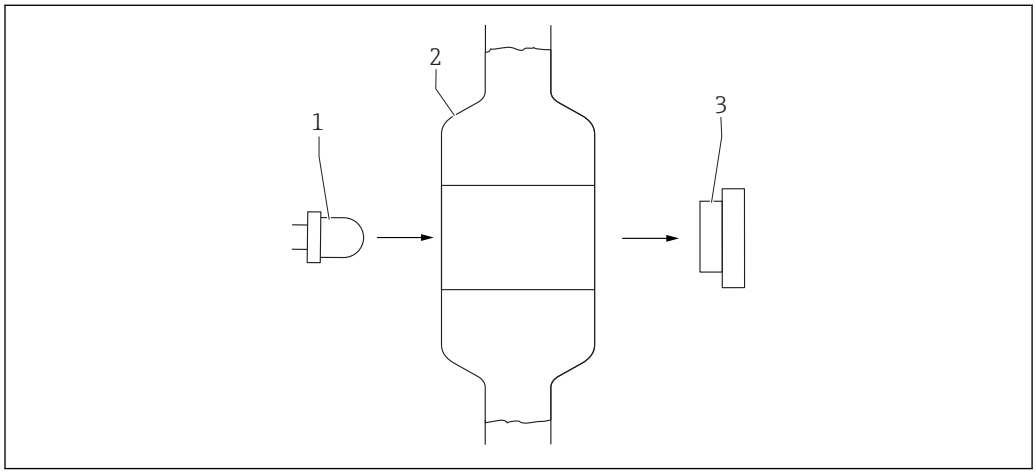

1 Measuring cell

1 LED unit (for measurement/reference)
2 Photometer cuvette - mixing and reaction vessel
3 Detector (for measurement/reference)

The oxidizing agent itself is reduced from Cr^{6+} to Cr^{3+} during the chemical reaction. This is associated with the color of the solution changing from orange to green. The reduction of the chromate and the color change are directly proportional to the concentration of oxidizable substances in the sample. The optical quantification of the reduced chromate amount can therefore be used as an indicator of the chemical oxygen demand of the sample.

Cross-sensitivity

The ions listed were checked with the specified concentrations. A summary effect has not been studied. No cross-sensitivities were observed up to the concentration levels indicated.

20 000 mg/l (ppm)	$(NH_4)_2SO_4$
5000 mg/l (ppm)	NaCl

Oxidizable substances

The substances oxidized by the COD method are primarily organic carbon compounds. Alongside this some inorganic compounds, such as iodide and nitrite, are also oxidized.

Measuring system

A complete measuring system comprises:
- Analyzer Liquiline System CA80COD with the configuration ordered
- Reagents and standard solutions (to be ordered separately)
- Suction strainer or optional Y strainer with process connection

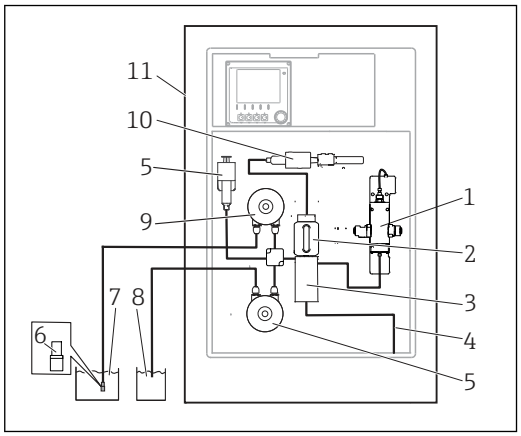

2 *Measuring system with Liquiline System CA80COD and suction strainer*

1 *Pressure reactor*
2 *Dosing unit*
3 *Valve manifold*
4 *Outlet*
5 *Dilution module (optional)*
6 *Suction strainer*
7 *Medium*
8 *Water for optional dilution module*
9 *Peristaltic pump*
10 *Dispenser*
11 *Liquiline System CA80COD*

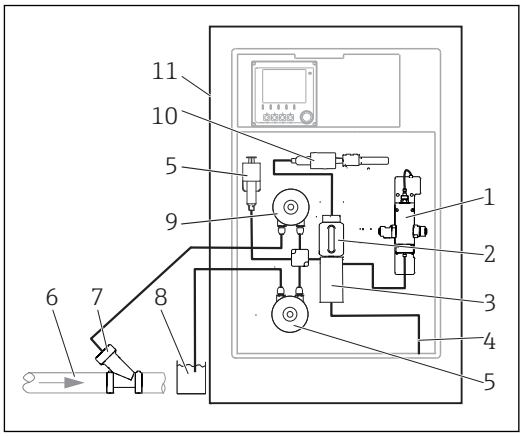

3 *Measuring system with Liquiline System CA80COD and Y strainer*

1 *Pressure reactor*
2 *Dosing unit*
3 *Valve manifold*
4 *Outlet*
5 *Dilution module (optional)*
6 *Medium*
7 *Y strainer (optional)*
8 *Water for optional dilution module*
9 *Peristaltic pump*
10 *Dispenser*
11 *Liquiline System CA80COD*

Customer-specific solution

Prior to analysis, the sample must be prepared at the customer site so that it is and homogeneous (representative sample). The sample can be supplied to an external collecting vessel . The customer-specific sample preparation system must have its own individual control unit.

The version of the Liquiline System CA80 as a self-priming device does not have a collecting vessel with level detection. For this reason, a continuous supply of sample must be guaranteed on the process side.

Y strainer (optional)

With the Y strainer it is possible to directly take samples containing particles from the pipes. It is therefore also suitable for the COD analysis procedure where particles up to a certain size must also be included in the analysis.

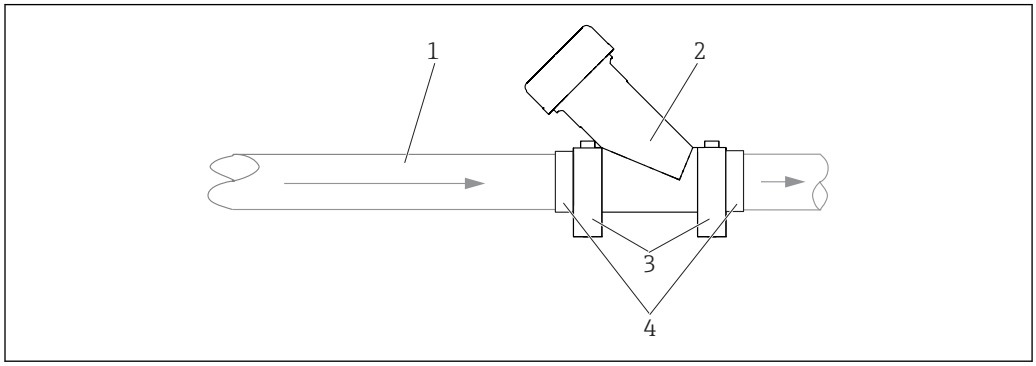

1 Medium
2 Y strainer
3 Pipe clamps
4 Adhesive fittings ID 40 mm, straight

Device architecture

Function diagram

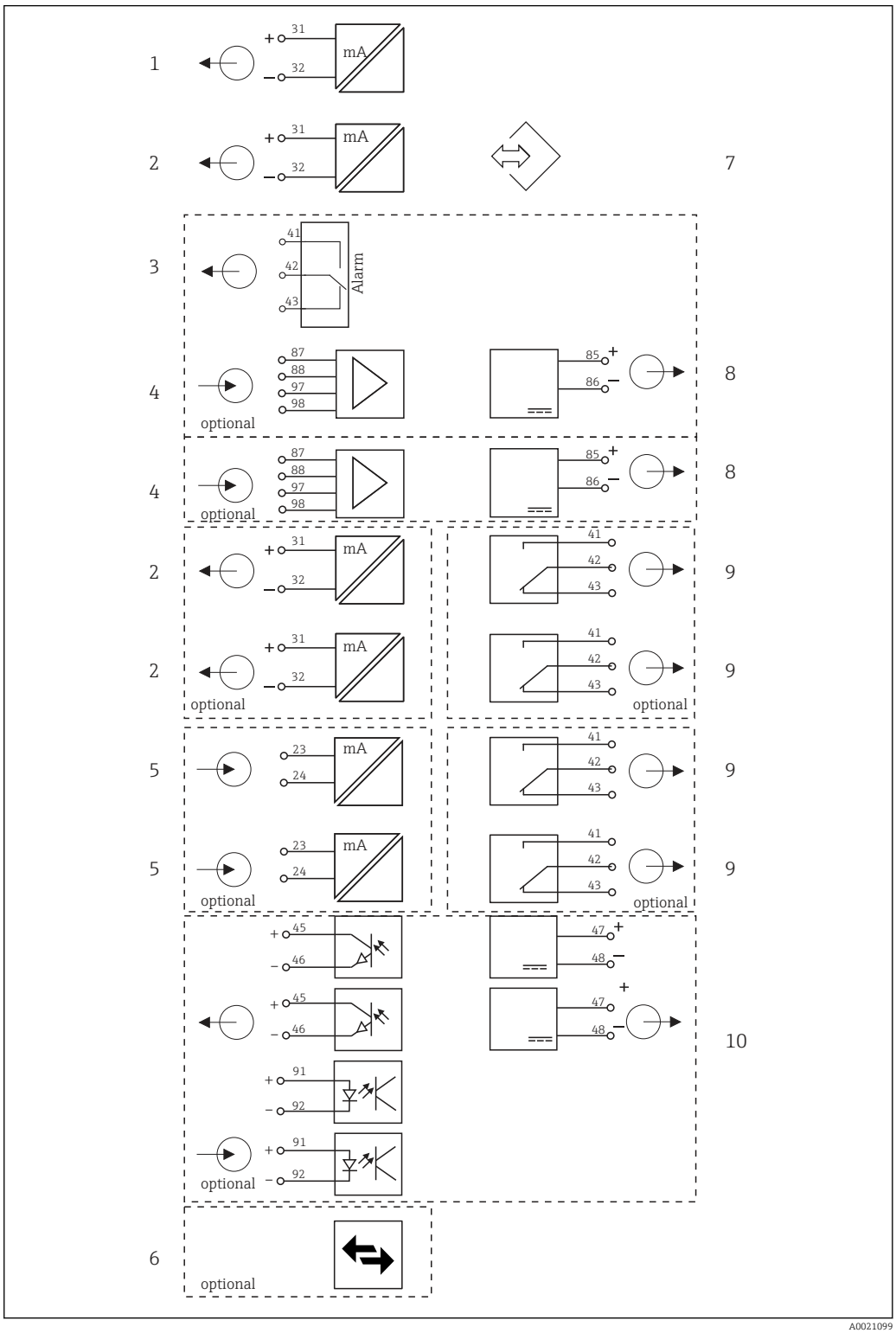

4 *Block diagram CA80*

1 *Current output 1:1*
2 *Current outputs*
3 *Alarm relay*
4 *2 x Memosens input (1 x optional)*
5 *2 x current input (optional)*
6 *Modbus/Ethernet (optional)*
7 *Service interface*
8 *Power supply, fixed cable sensors*
9 *2 or 4 x relays (optional)*
10 *2 digital inputs and outputs (optional)*

Slot and port assignment

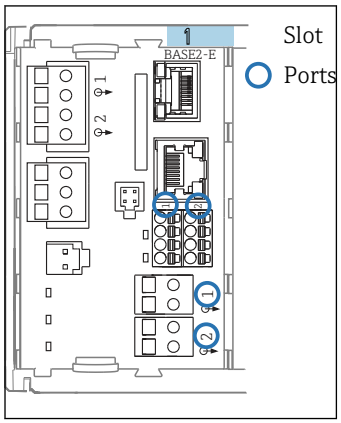

5 *Slot and port assignment*

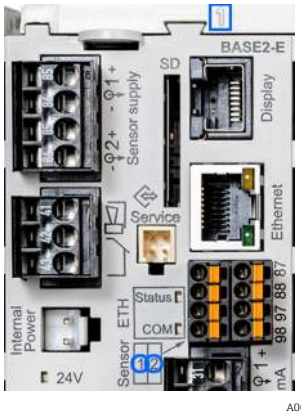

6 *Slot and port assignment*

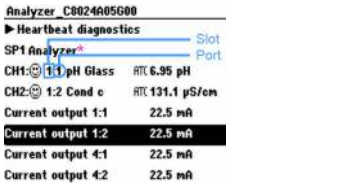

7 *Slots and ports on the display*

* *Analyzer measured value (parameter-specific)*

- Inputs are assigned to measuring channels in the ascending order of the slots and ports.
  In the example above:
  "CH1: 1:1 pH glass" means:
  Channel 1 (CH1) is slot 1 (basic module) : Port 1 (input 1), pH glass sensor
- Outputs and relays are named according to their function, e.g. "current output", and are displayed in ascending order with the slot and port numbers
- Display shows SP1: analyzer measuring channel 1 with sampling point SP1 (measured value display is parameter-specific; is not illustrated in the example)

Communication and data processing

Communication protocols:

- Fieldbus systems
  - PROFIBUS DP (Profile 3.02)
  - Modbus TCP or RS485
  - PROFINET
  - EtherNet/IP
- Configuration via Ethernet

Extension module 485DP/485MB and current outputs

For PROFIBUS DP and Modbus RS485 communication protocols:
A maximum of 2 current outputs can be used in parallel.

Ethernet functionality via Base2 module and current outputs

A maximum of 6 current outputs can be used in parallel.

Bus termination on the device

- Via slide switch at bus module 485DP/485MB
- Displayed via LED "T" on bus module 485DP/485MB

Dependability

Reliability thanks to Memosens technology

Memosens MEMOSENS

Memosens makes your measuring point safer and more reliable:

- Non-contact, digital signal transmission enables optimum galvanic isolation
- Completely watertight
- Sensor can be calibrated in a lab, thus increasing the availability of the measuring point in the process
- Intrinsically safe electronics mean operation in hazardous areas is not a problem.
- Predictive maintenance thanks to recording of sensor data, e.g.:
  - Total hours of operation
  - Hours of operation with very high or very low measured values
  - Hours of operation at high temperatures
  - Number of steam sterilizations
  - Sensor condition

Ease of maintenance

Modular design

The modular analyzer can be easily adapted to suit your needs:
- Retrofit extension modules for new or extended range of functions, e.g. current outputs, relays and digital communication
- Upgrade to measuring station with digital sensors with Memosens technology
- Optional: M12 sensor connector for connecting any kind of Memosens sensor

Data storage
- Independent, integrated ring memories (FIFO) or stack memories for recording:
  - An analog value (e.g. flow, pH value, conductivity)
  - Events (e.g. power failure)
- Analyzer data logbook
  - Scan time: automatically adjusted to the measuring interval
  - Max. 2 data logbooks
  - 20 000 entries per logbook
  - Graphic display (load curves) or numerical list
  - Factory setting: enabled for all channels, ring memory (FIFO)
- Data logbooks for digital sensors:
  - Adjustable scan time: 1 to 3600 s (1 h)
  - Max. 8 data logbooks
  - 150,000 entries per logbook
  - Graphic display (load curves) or numerical list
- Calibration logbook: max. 75 entries
- Hardware logbook:
  - Hardware configuration and modifications
  - Max. 125 entries
- Version logbook:
  - Software updates among other things
  - Max. 50 entries
- Event logbook
- Analyzer event logbook
  - Analyzer-specific events
  - Max. 19 500 entries, ring memory or fill-up buffer for recording
- Operations logbook: max. 250 entries
- Diagnostic logbook: max. 250 entries

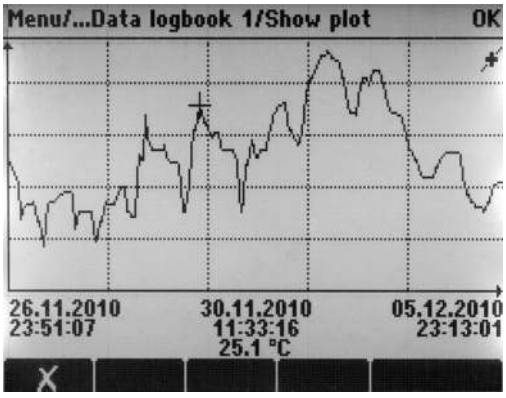

A0024359

8 Data logbook: graphic representation on the display

Mathematical functions (virtual process values)

In addition to "real" process values, which are provided by connected physical sensors or analog inputs, mathematical functions can be used to calculate a maximum of 6 "virtual" process values.

The "virtual" process values can be:
- Output via a current output or a fieldbus
- Used as a controlled variable
- Assigned as a measured variable to a limit switch
- Used as a measured variable to trigger cleaning
- Displayed in user-defined measuring menus

The following mathematical functions are possible:
- Calculation of pH from two conductivity values according to VGB Standard 405, e.g. in boiler feedwater
- Difference between two measured values from different sources, e.g. to monitor membranes
- Differential conductivity, e.g. to monitor the efficiency of ion exchangers
- Degassed conductivity, e.g. for process controls in power plants
- Redundancy to monitor two or three redundant sensors
- rH calculation based on the measured values of a pH and an ORP sensor
- Formula editor as a powerful mathematics tool and for Boolean operations with up to 3 measured values

FieldCare
Configuration and asset management software based on FDT/DTM technology
- Complete device configuration when connected via FXA291 and service interface
- Access to a number of configuration parameters and identification, measuring and diagnostic data when connected via HART modem
- Logbooks can be downloaded in CSV format or binary format for "Field Data Manager" software

Field Data Manager
Visualization software and database for measuring, calibration and configuration data
- SQL database which is protected against manipulation
- Functions to import, save and print out logbooks
- Load curves to display measured values

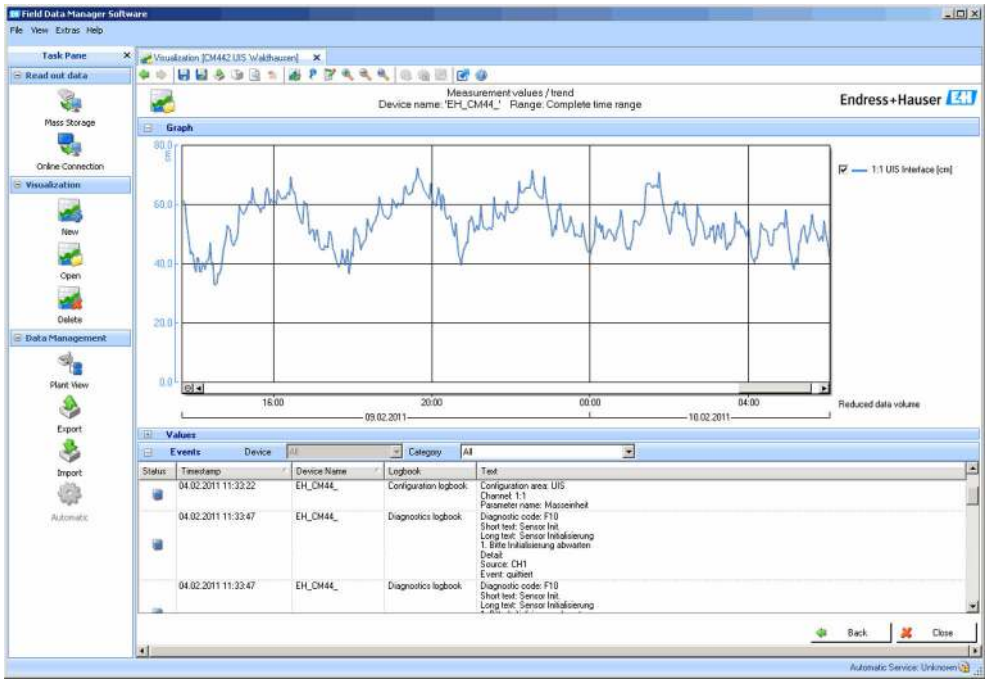

A0016009

9 *Field Data Manager: load curve display*

SD card
The exchangeable storage medium enables:
- Quick and easy software updates and upgrades
- Quick and easy updates and upgrades to measuring parameter lists
- Data storage of internal device memory (e.g. logbooks)
- Transfer of complete configurations to a device with an identical setup (backup function)
- Transfer of configurations without the TAG and bus address to devices with an identical setup (copy function)

Endress+Hauser offers industry-approved SD cards as accessories. These memory cards provide maximum data security and integrity.

Other SD cards can also be used. However, Endress+Hauser does not accept any responsibility for the data security of such cards.

Self-monitoring functions

Electronics
- Current inputs are deactivated in the event of overcurrent and reactivated once the overcurrent stops.
- Board voltages are monitored and the board temperature is also measured.

Counter
- Counters monitor consumables such as reagents, pump and valve hoses or dispensers.
- Waste volume

Photometer
- Automatic temperature monitoring
- Active monitoring of communication between the photometer module and the analyzer electronics

Leak sensor in the housing

Data security

All settings, logbooks etc. are stored in a non-volatile memory to ensure that the data are retained even in the event of a disruption to the power supply.

IT security

We only provide a warranty if the device is installed and used as described in the Operating Instructions. The device is equipped with security mechanisms to protect it against any inadvertent changes to the device settings.

IT security measures in line with operators' security standards and designed to provide additional protection for the device and device data transfer must be implemented by the operators themselves.

Input

Measured variables

CSB_{cr} O_2 [mg/l, ppm]

Measuring range

CA80COD-**C4:	0 to 500 mg/l O_2, automatic measuring range switching
CA80COD-**C5:	0 to 5000 mg/l O_2, automatic measuring range switching
CA80COD-**C6:	0 to 5000 mg/l O_2 + dilution module (1:4)

Types of input
- 1 measuring channel (analyzer main parameter)
- 1 to 4 digital sensor inputs for sensors with Memosens protocol (optional)
- Analog current inputs (optional)
- Binary inputs (optional)

Input signal

Depending on version
2 x 0/4 to 20 mA (optional), passive, potentially isolated

Current input, passive

Span
> 0 to 20 mA

Signal characteristic
Linear

Internal resistance
Non-linear

Test voltage
500 V

Cable specification (for optional sensors with Memosens technology)

Cable type
Memosens data cable CYK10 or sensor fixed cable, each with cable end sleeves or M12 round-pin connector (optional)

Cable length
Max. 100 m (330 ft)

Output

Output signal

Depending on version:
- 2 x 0/4 to 20 mA, active, potentially isolated (standard version)
- 4 x 0/4 to 20 mA, active, potentially isolated (version with 2 additional analog outputs)
- 6 x 0/4 to 20 mA, active, potentially isolated (version with 4 additional analog outputs)
- Binary outputs

PROFIBUS DP/RS485	
Signal encoding	EIA/TIA-485, PROFIBUS DP-compliant acc. to IEC 61158
Data transmission rate	9.6 kBd, 19.2 kBd, 45.45kBd, 93.75 kBd, 187.5 kBd, 500 kBd, 1.5 MBd, 6 MBd, 12 MBd
Galvanic isolation	Yes
Connectors	Spring terminal (max. 1.5 mm), bridged internally (T-function), optional M12
Bus termination	Internal slide switch with LED display

Modbus RS485	
Signal encoding	EIA/TIA-485
Data transmission rate	2,400, 4,800, 9,600, 19,200, 38,400, 57,600 and 115,200 baud
Galvanic isolation	Yes
Bus termination	Internal slide switch with LED display

Web server and Modbus TCP	
Signal encoding	IEEE 802.3 (Ethernet)
Data transmission rate	10 / 100 MBd
Galvanic isolation	Yes
Connection	RJ45, M12 optional
IP address	DHCP or configuration using menu

EtherNet/IP	
Signal encoding	IEEE 802.3 (Ethernet)
Data transmission rate	10 / 100 MBd
Galvanic isolation	Yes
Connection	RJ45, M12 optional (D-encoded)
IP address	DHCP (default) or configuration via menu

PROFINET	
Signal encoding	IEEE 802.3 (Ethernet)
Data transmission rate	100 MBd
Galvanic isolation	Yes
Connection	RJ45
Name of station	Via DCP protocol using the configuration tool (e.g. Siemens PRONETA)
IP address	Via DCP protocol using the configuration tool (e.g. Siemens PRONETA)

Signal on alarm

Adjustable, as per NAMUR Recommendation NE 43
- In measuring range 0 to 20 mA:
  Failure current from 0 to 23 mA
- In measuring range 4 to 20 mA:
  Failure current from 2.4 to 23 mA
- Factory setting for failure current for both measuring ranges:
  21.5 mA

Load

Max. 500 Ω

Transmission behavior

Linear

Current outputs, active

Span

0 to 23 mA

Signal characteristic

Linear

Electrical specification

Output voltage
Max. 24 V

Test voltage
500 V

Cable specification

Cable type
Recommended: shielded cable

Cable specification
Max. 2.5 mm^2 (14 AWG)

Relay outputs

Electrical specification

Relay types
- 1 single-pin changeover contact (alarm relay)
- 2 or 4 single-pin changeover contacts (optional with extension modules)

Maximum load
- Alarm relay: 0.5 A
- All other relays: 2.0 A

Relay switching capacity

Base module (Alarm relay)

Switching voltage	Load (max.)	Switching cycles (min.)
230 V AC, cosΦ = 0.8 to 1	0.1 A	700,000
	0.5 A	450,000
115 V AC, cosΦ = 0.8 to 1	0.1 A	1,000,000
	0.5 A	650,000
24 V DC, L/R = 0 to 1 ms	0.1 A	500,000
	0.5 A	350,000

Extension module

Switching voltage	Load (max.)	Switching cycles (min.)
230 V AC, cosΦ = 0.8 to 1	0.1 A	700,000
	0.5 A	450,000
	2 A	120,000
115 V AC, cosΦ = 0.8 to 1	0.1 A	1,000,000
	0.5 A	650,000
	2 A	170,000
24 V DC, L/R = 0 to 1 ms	0.1 A	500,000
	0.5 A	350,000
	2 A	150,000

Minimum load (typical)
- Min. 100 mA at 5 V DC
- Min. 1 mA at 24 V DC
- Min. 5 mA at 24 V AC
- Min. 1 mA at 230 V AC

Protocol-specific data

PROFIBUS DP

Manufacturer ID	11_h
Device type	$155E_h$
Profile version	3.02
Device database files (GSD files)	www.endress.com/profibus Device Integration Manager DIM
Output variables	16 AI blocks, 8 DI blocks
Input variables	4 AO blocks, 8 DO blocks
Supported features	▪ 1 MSCY0 connection (cyclical communication, master class 1 to slave) ▪ 1 MSAC1 connection (acyclical communication, master class 1 to slave) ▪ 2 MSAC2 connections (acyclical communication, master class 2 to slave) ▪ Device lock: The device can be locked using the hardware or software. ▪ Addressing using DIL switches or software ▪ GSD, PDM DD, DTM

Modbus RS485

Protocol	RTU/ASCII
Function codes	03, 04, 06, 08, 16, 23
Broadcast support for function codes	06, 16, 23
Output data	16 measured values (value, unit, status), 8 digital values (value, status)
Input data	4 setpoints (value, unit, status), 8 digital values (value, status), diagnostic information
Supported features	Address can be configured using switch or software

Modbus TCP

TCP port	502
TCP connections	3
Protocol	TCP
Function codes	03, 04, 06, 08, 16, 23
Broadcast support for function codes	06, 16, 23
Output data	16 measured values (value, unit, status), 8 digital values (value, status)
Input data	4 setpoints (value, unit, status), 8 digital values (value, status), diagnostic information
Supported features	Address can be configured using DHCP or software

Web server

The web server enables full access to the device configuration, measured values, diagnostic messages, logbooks and service data via standard WiFi/WLAN/LAN/GSM or 3G routers with a user-defined IP address.

TCP port	80
Supported features	▪ Remote-controlled device configuration(1 session) ▪ Save/restore device configuration (via SD card) ▪ Logbook export (file formats: CSV, FDM) ▪ Access to web server via DTM or Internet Explorer ▪ Login ▪ Web server can be switched off

EtherNet/IP

Log	EtherNet/IP	
ODVA certification	Yes	
Device profile	Generic device (product type: 0x2B)	
Manufacturer ID	$0x049E_h$	
Device type ID	0x109F	
Polarity	Auto-MIDI-X	
Connections	CIP	12
	I/O	6
	Explicit message	6
	Multicast	3 consumers
Minimum RPI	100 ms (default)	
Maximum RPI	10000 ms	
System integration	EtherNet/IP	EDS
	Rockwell	Add-on-Profile Level 3, Faceplate for Factory Talk SE
IO data	Input (T → O)	Device status and diagnostic message with highest priority Measured values: ▪ 16 AI (analog input) + Status + Unit ▪ 8 DI (discrete input) + Status
	Output (O → T)	Actuating values: ▪ 4 A0 (analog output) + status + unit ▪ 8 DO (discrete output) + Status

PROFINET

Protocol	"Application layer protocol for decentral device periphery and distributed automation", PNIO Version 2.34
Communication type	100 MBit/s
Conformance Class	Conformance Class B
Netload Class	Netload Class II
Baud rate	Automatic 100 Mbps with full-duplex detection
Cycle times	From 32 ms
Device profile	Application interface identifier 0xF600 Generic device
PROFINET interface	1 port, Realtime Class 1 (RT_CLASS_1)
Manufacturer ID	$0x11_h$
Device type ID	$0x859F_h$
Device description files (GSD)	Information and files under: ▪ www.endress.com On the product page for the device: Documents/Software → Device drivers ▪ www.profibus.com On the website under Products/Product Finder
Polarity	Auto-polarity for automatic correction of crossed TxD and RxD pairs
Supported connections	▪ 1 x AR (IO Controller AR) ▪ 1 x AR (IO-Supervisor Device AR connection allowed) ▪ 1 x Input CR (Communication Relation) ▪ 1 x Output CR (Communication Relation) ▪ 1 x Alarm CR (Communication Relation)
Configuration options for measuring device	▪ Web browser ▪ Manufacturer-specific software (FieldCare, DeviceCare) ▪ Device master file (GSD), can be read out via the integrated web server of the measuring device
Configuration of the device name	DCP protocol
Supported functions	▪ Identification & maintenance Simple device identification via: ▪ Process control system ▪ Nameplate ▪ Measured value status The process variables are communicated with a measured value status ▪ Blinking feature (FLASH_ONCE) via the local display for simple device identification and assignment ▪ Device operation via operating tools (e.g. FieldCare, DeviceCare)
System integration	For information on system integration, see the Operating Instructions ▪ Cyclic data transmission ▪ Overview and description of the modules ▪ Status coding ▪ Startup configuration ▪ Factory setting

Power supply

Supply voltage

▪ 100 to 120 V AC / 200 to 240 V AC
▪ 50 or 60 Hz

Fieldbus connection

Supply voltage: not applicable

Power consumption

All versions except "Outdoor" version

250 VA

"Outdoor" version

250 VA + 650 VA per hose heater, max. 900 VA (version with cooling) [1)]

Cable entries

- 4 x bores for M16, G3/8, NPT3/8", Memosens connection [2)]
- 4 x bores for M20, G1/2, NPT1/2"

Cable specification

Cable gland	Permitted cable diameter
M16x1.5 mm	4 to 8 mm (0.16 to 0.32")
M12x1.5 mm (for order version M12 socket for Memosens sensors)	2 to 5 mm (0.08 to 0.20")
M20x1.5 mm	6 to 12 mm (0.24 to 0.48")
NPT$^{3}/_{8}$"	4 to 8 mm (0.16 to 0.32")
G$^{3}/_{8}$	4 to 8 mm (0.16 to 0.32")
NPT½"	6 to 12 mm (0.24 to 0.48")
G½	7 to 12 mm (0.28 to 0.48")

Cable glands mounted at the factory are tightened with 2 Nm.

Connecting optional modules

With extension modules you can purchase additional functions for your device.

NOTICE

Unacceptable hardware combinations (due to conflicts in power supply)

Incorrect measurements or total failure of the measuring point as a result of heat build-up or overloading

- ▶ Find out if the planned upgrade of your device results in a permitted hardware combination (configurator on www.endress.com/CA80COD).
- ▶ A maximum of eight current inputs and current outputs is permitted.
- ▶ A maximum of two "DIO" modules is permitted.
- ▶ Please contact your Endress+Hauser sales center should you have any questions.

Cable bushings and possible cable diameters

1) The power value indicated on the nameplate refers to the power consumption when commissioning at 5 °C (41 °F) after an operating time of one minute.
2) In the case of the "Outdoor" version, 2 bores are occupied; for this reason only 2 Memosens sensors are possible

Overview of all the optional modules

Module name				
AOR	**2R**	**4R**	**2DS**	**DIO**
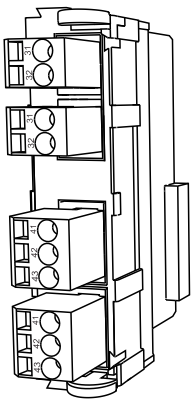	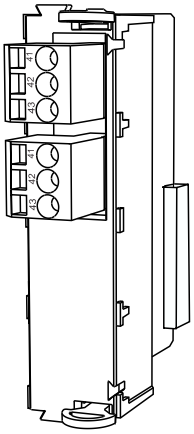	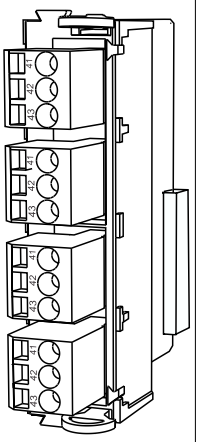	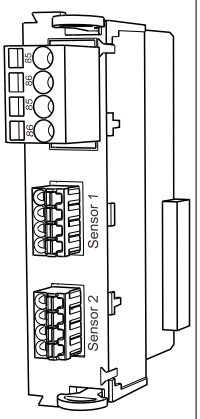	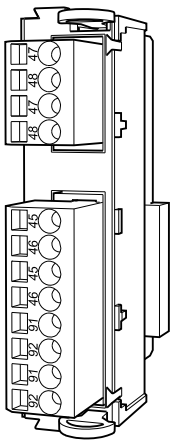
▪ 2 x 0/4 to 20 mA analog outputs ▪ 2 relays ▪ Order No. 71111053	▪ 2 relays ▪ Order No. 71125375	▪ 4 relays ▪ Order No. 71125376	▪ 2 digital sensor inputs ▪ 2 power supply systems for digital sensors ▪ Order No. 71135631	▪ 2 digital inputs ▪ 2 digital outputs with auxiliary voltage ▪ Order No. 71135638
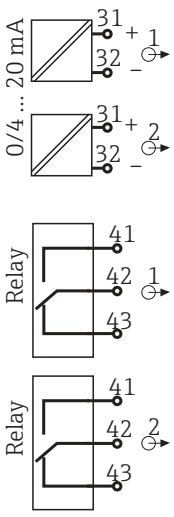	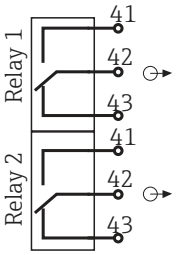	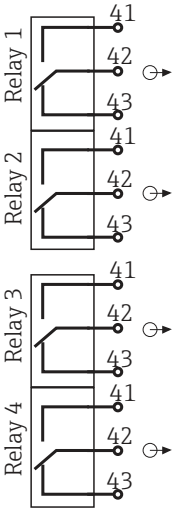	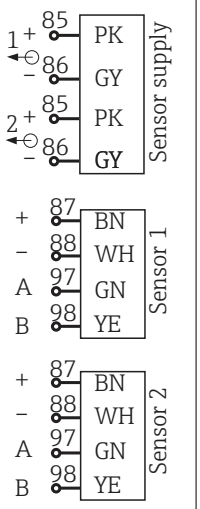	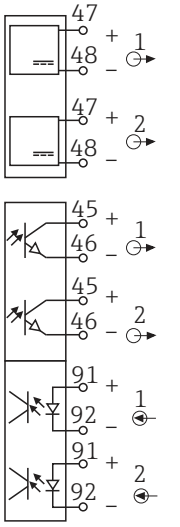

Module name				
2AO	**4AO**	**2AI**	**485DP**	**485MB**
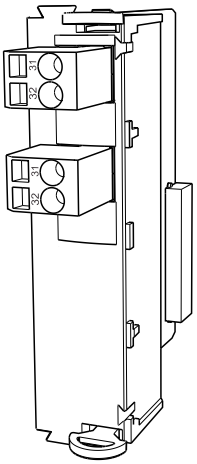	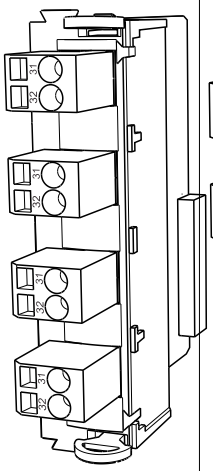	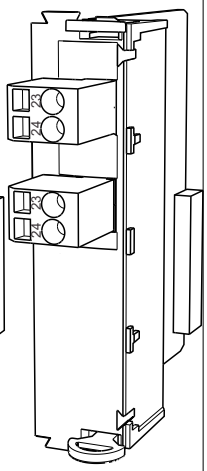	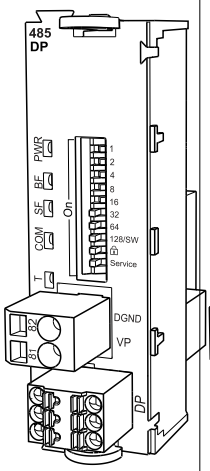	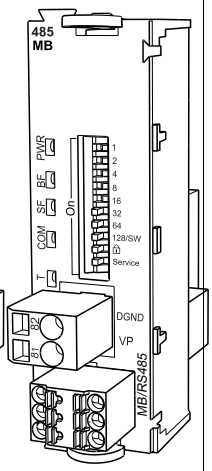
▪ 2 x 0/4 to 20 mA analog outputs ▪ Order No. 71135632	▪ 4 x 0/4 to 20 mA analog outputs ▪ Order No. 71135633	▪ 2 x 0/4 to 20mA analog inputs ▪ Order No. 71135639	▪ 5V power supply for PROFIBUS DP termination ▪ RS485 for PROFIBUS DP ▪ Order No. 71575177	▪ RS485 for Modbus ▪ Order No. 71575178
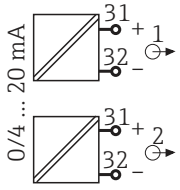	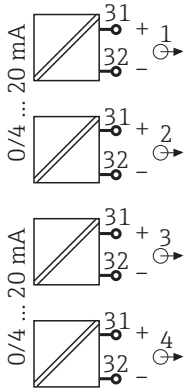	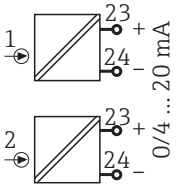	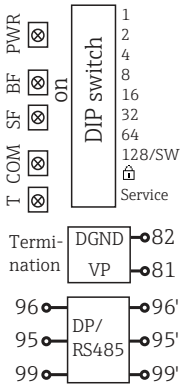	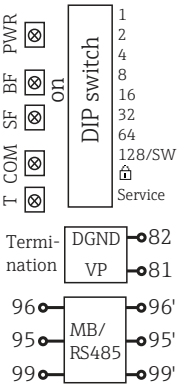

PROFIBUS DP (module 485DP)
Contacts 95, 96 and 99 are jumpered in the plug. This ensures that PROFIBUS communication is not interrupted if the connector is disconnected.

Sensor connection (optional)

Sensors with Memosens protocol

Sensor types	Sensor cable	Sensors
Digital sensors **without** additional internal power supply	With plug-in connection and inductive signal transmission	▪ pH sensors ▪ ORP sensors ▪ Combined sensors ▪ Oxygen sensors (amperometric and optical) ▪ Conductivity sensors with conductive measurement of conductivity ▪ Chlorine sensors (disinfection)
	Fixed cable	Conductivity sensors with inductive measurement of conductivity
Digital sensors with additional internal power supply	Fixed cable	▪ Turbidity sensors ▪ Sensors for interface measurement ▪ Sensors for measuring the spectral absorption coefficient (SAC) ▪ Nitrate sensors ▪ Optical oxygen sensors ▪ Ion-sensitive sensors

Performance characteristics

Maximum measured error [3)]

According to potassium hydrogen phthalate test

0 to 30 mg/l (ppm)	1.5 mg/l (ppm) [1)]
> 30 to 50 mg/l (ppm)	3 mg/l (ppm) [1)]
> 50 to 100 mg/l (ppm)	6 mg/l (ppm) [2)]
> 100 to 200 mg/l (ppm)	8 mg/l (ppm) [2)]
> 200 to 400 mg/l (ppm)	4% of reading
> 400 to 5000 mg/l (ppm)	3% of reading

1) Calibrated at 50 mg/l (ppm)
2) Calibrated at 500 mg/l (ppm)

Maximum measurement error for sensor inputs

→ Documentation of the connected sensor

Maximum measurement error for current inputs and outputs

Typical measured errors:

< 20 µA (with current values < 4 mA)

< 50 µA (with current values 4 to 20 mA)

at 25 °C (77° F) in each case

Additional measured error depending on the temperature:
< 1.5 µA/K

LOQ (limit of quantification)

15 mg/l (ppm) O_2

Repeatability [3)]

± 5 % of measured value

Repeatability of sensor inputs

→ Documentation of the connected sensor

Measuring interval

Continuous (approx. 55 min), adjustable 30 min to 24 h

3) Measured with CA80COD-AAxxxxx according to HJ 377-2019. Measurement errors include all the uncertainties of the analyzer. They do not include the uncertainties from the standard solutions used as a reference.

Digestion time	3 to 120 min
Sample requirement	8 ml (0.27 fl oz)/measurement
Reagent requirement	Given a measuring interval of 1 hour, one set of reagents lasts for 50 days
Standard requirement	▪ Zero standard: given a calibration interval of 48 h, a cleaning interval of 24 h and a sample hose length of 3 m (9.84 ft) approx. 500 ml (16.9 fl.oz) per month (without dilution module) ▪ Standard 1: given a calibration interval of 48 h approx. 90 ml (3.04 fl.oz) per month (without dilution module)
Dilution water requirement	Approx. 20 ml (0.68 fl.oz) per measurement Demineralized water is recommended for expected sample concentrations of < 50 mg/l (ppm).
Calibration interval	1 h to 90 days, depending on the application and ambient conditions
Maintenance interval	Once weekly, depending on the application
Maintenance effort	▪ Weekly: visual inspection ▪ Monthly: 1 hour

Mounting

Mounting location	Note the following when erecting the device: ▶ If mounting on a wall, make sure that the wall has sufficient load-bearing capacity and is fully perpendicular. ▶ If mounting on a base, set up the device on a level surface. Installing on a base is only permitted indoors. ▶ Protect the device against additional heating (e.g. from heaters). ▶ Protect the device against mechanical vibrations. ▶ Protect the device against corrosive gases, e.g. hydrogen sulfide (H_2S) . ▶ Make sure to pay attention to the maximum height difference and the maximum distance from the sampling point. ▶ Ensure that the unit can drain freely, without any siphoning effects. ▶ Make sure air can circulate freely at the front of the housing. ▶ Open analyzers (i.e. analyzers that are supplied without a door) may only be set up in closed areas or in a protective cabinet or similar facility. ▶ "Outdoor" version only: Post mounting is recommended for outdoor installation.
Installation instructions	The device can be installed in the following ways: ▪ Mounted on a wall ▪ Mounted on a base ▪ Post mounting / on a post (accessory)

Spacing required for installing analyzer

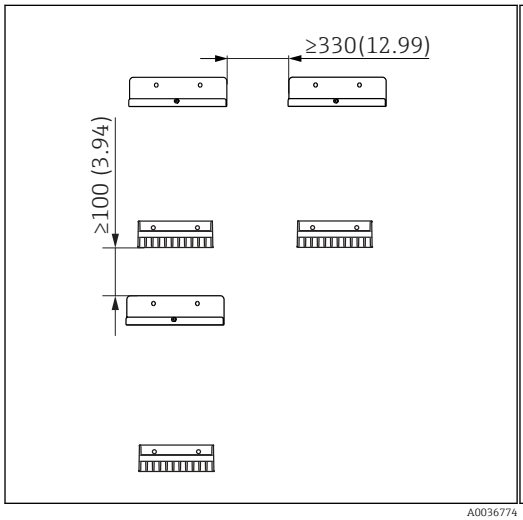

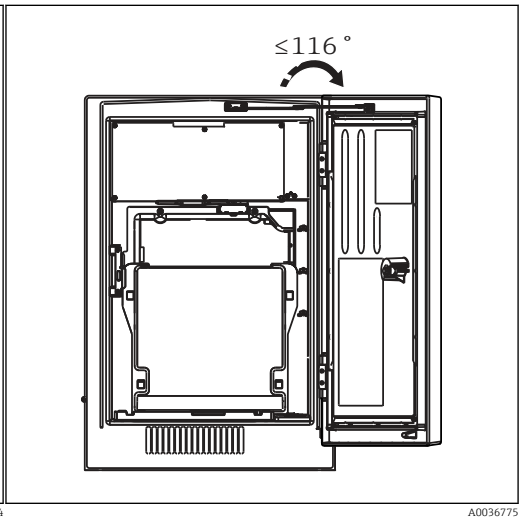

10 Minimum spacing required for mounting. Engineering unit mm (in).

11 Maximum opening angle

Spacing required for installing wall-mount version

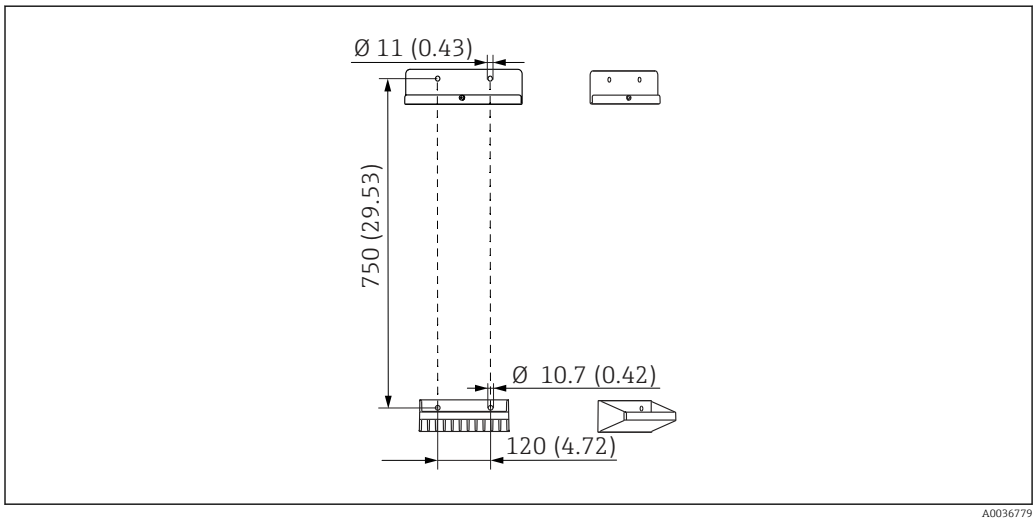

12 Holder unit dimensions. Engineering unit mm (in)

Environment

Ambient temperature range	**All housing versions with the exception of the outdoor version** +5 to +40 °C (41 to 104 °F) **Outdoor version** -20 to +40 °C (-4 to 104 °F)
Storage temperature	–20 to 60 °C (–4 to 140 °F)
Relative humidity	10 to 95 %, non-condensing
Degree of protection	IP55 (cabinet, analyzer stand), TYPE 3R (cabinet, analyzer stand)

Electromagnetic compatibility [4]	Interference emission and interference immunity as per EN 61326-1, class A for industrial areas
Electrical safety	According to EN/IEC 61010-1:2010, Class I equipment Low voltage: overvoltage category II For installations up to 2000 m (6500 ft) above MSL
Pollution degree	Pollution level 2

Process

Sample temperature	4 to 40 °C (39 to 104 °F)
Consistency of the sample	Low solids content, aqueous, homogenized
Sample supply	**Analyzer (without optional Y strainer):** Unpressurized **Y strainer (optional):** ▪ Permitted pressure range: max. 4 bar (58.01 psi) ▪ Flow: ensure sufficient flow for a Y strainer that is completely filled [5]

Mechanical construction

Dimensions

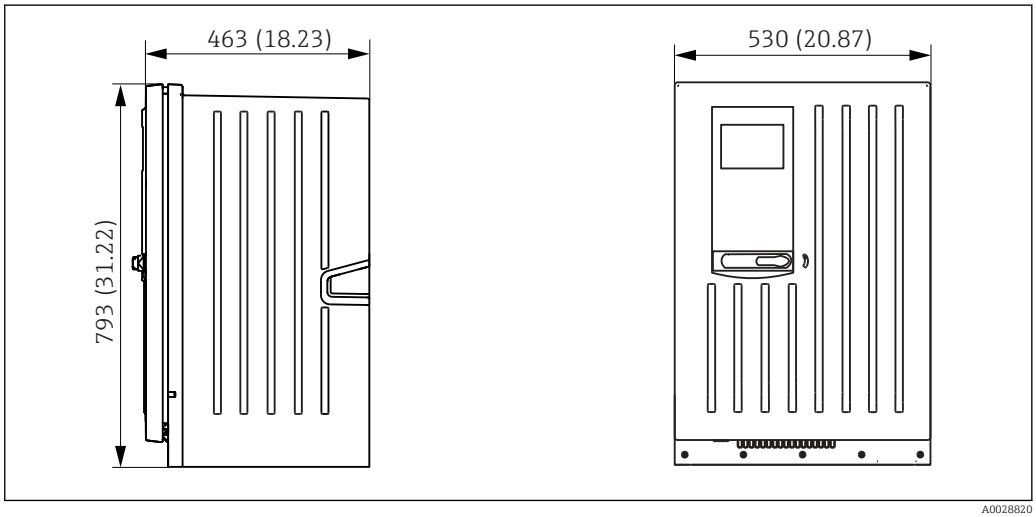

13 Liquiline System CA80 closed version, dimensions in mm (in)

4) Sufficient mains quality is required to operate the product as intended.
5) The greater the flow the greater the self-cleaning effect of the suction line. Preferred: > 1 m^3/h

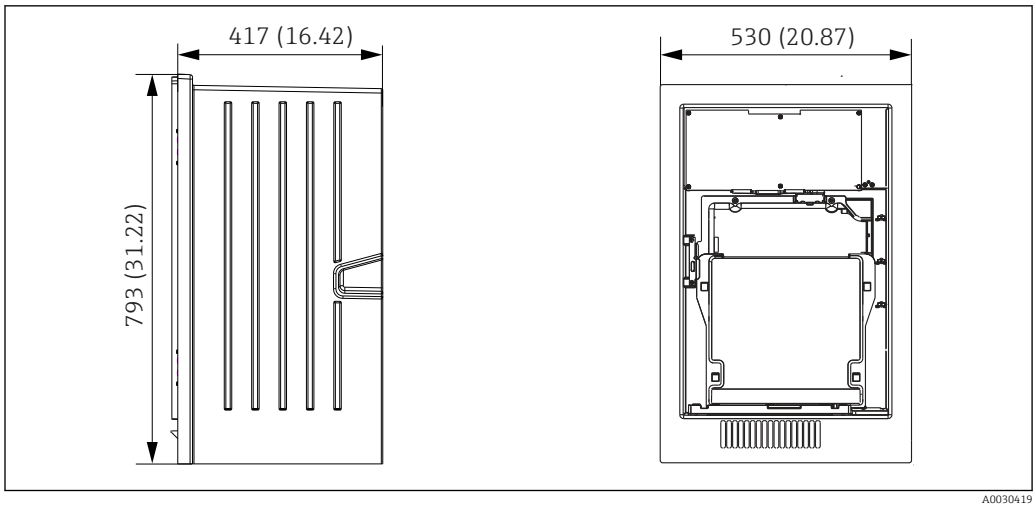

14 *Liquiline System CA80 open version, dimensions in mm (in)*

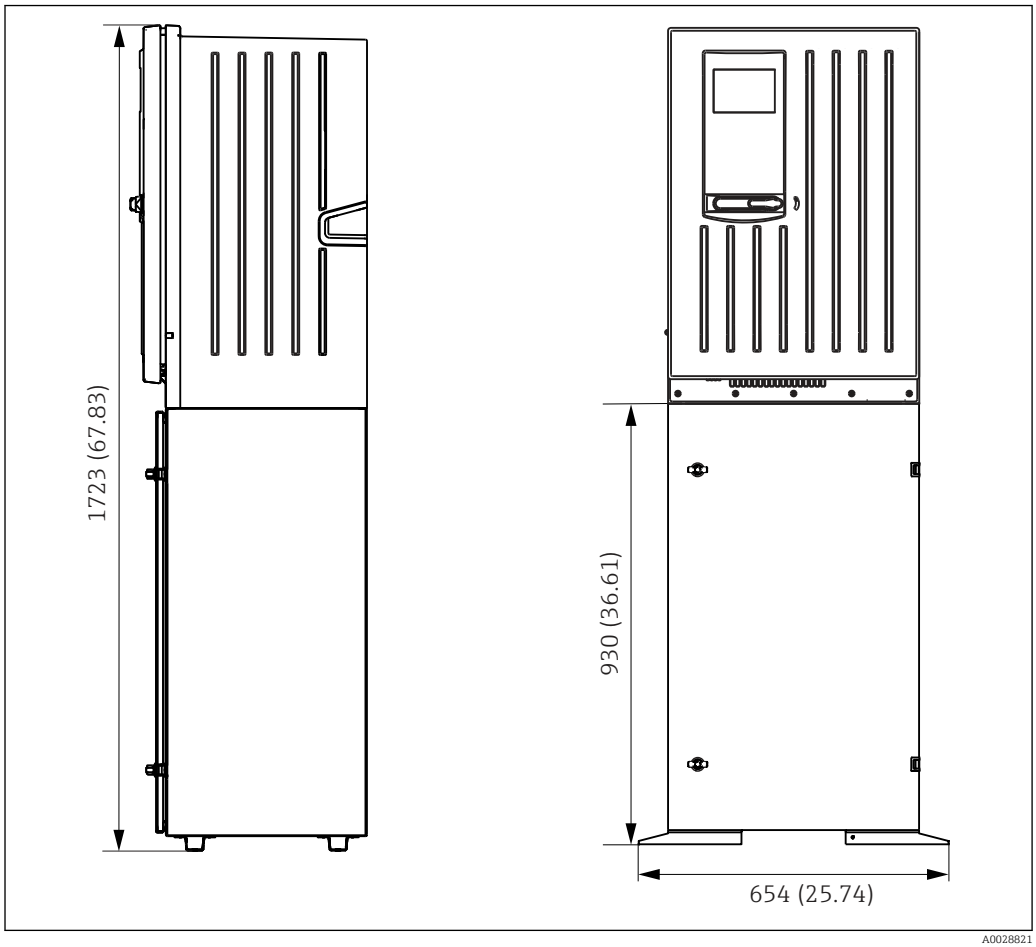

15 *Liquiline System CA80 with base, dimensions in mm (in)*

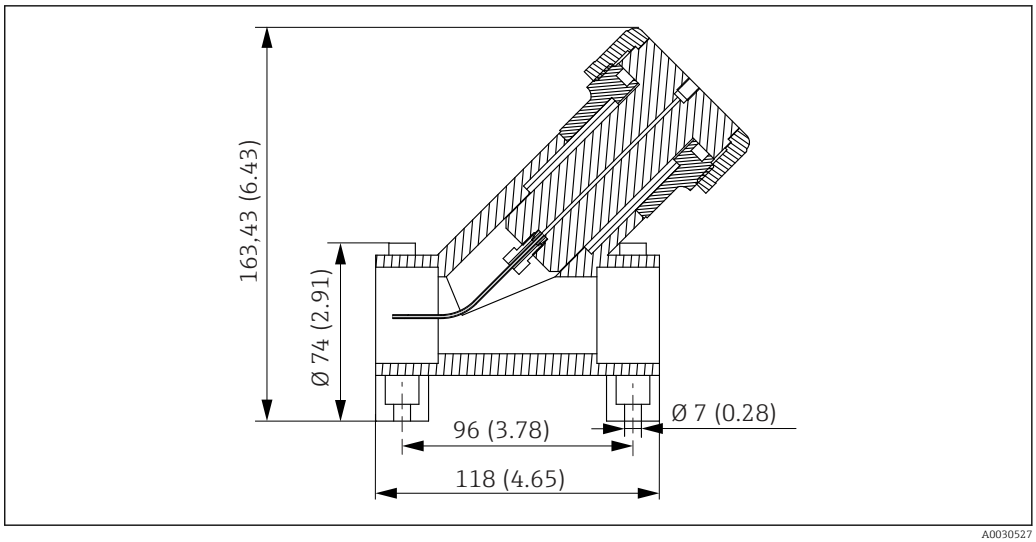

16 Y strainer (optional), dimensions in mm (inch)

Weight

Approx. 40 kg (88 lbs)

Materials

Parts not in contact with medium	
Cabinet version, exterior cover	ASA + PC
Open installation, exterior cover	
Cabinet version, interior lining	PP
Open installation, interior lining	
Window	Safety glass, coated
Reagent container	PP
Insulation	EPP (extruded PP)
Base, analyzer stand	Powder-coated sheet steel

Parts in contact with medium	
Dispenser body Piston seal	PP TPE
Dosing unit ▪ Valve manifold ▪ Valve seals ▪ Optical tube	 ▪ ETFE ▪ FKM ▪ Borosilicate glass
Hoses	▪ PTFE ▪ Sample hose, hose from pump to dilution vessel: PharMed
Reactor ▪ Reactor valves ▪ Optical tube ▪ Seal	 ▪ PVDF ▪ Borosilicate glass ▪ FFKM
Dilution vessel (optional)	PE
Y strainer	PVC-U

Process connection

Sample inlet:	Hose gland for rigid hoses with OD 3.2 mm
Dilution water:	Hose gland for rigid hoses with OD 3.2 mm
Outlet:	Hose gland for rigid hoses with OD 6 mm

Hose entries

4 x bores for M32 for sample inflow and outflow

Hose specification

Analyzer:
- Clearance: max. 5.0 m (16.4 ft)
- Height: max. 3 m (9.8 ft)
- Hose ID: 1.6 mm ($^{1}/_{16}$ in)

Y strainer (optional):
- Hose to analyzer:
  - ID 1.6 mm ($^{1}/_{16}$ in)
  - OD 3.2 mm ($^{1}/_{8}$ in)
- Hose to process:
  - ID 0.8 mm ($^{1}/_{32}$ in)
  - OD 1.6 mm ($^{1}/_{16}$ in)

Process connection, optional Y strainer

Adhesive fitting, ID 40 mm, straight

Operability

Operation concept

The simple and structured operating concept sets new standards:
- Intuitive operation with the navigator and soft keys
- Fast configuration of application-specific measurement options
- Easy configuration and diagnosis thanks to plain-text display
- All languages that can be ordered are available in every device



17 *Easy operation*

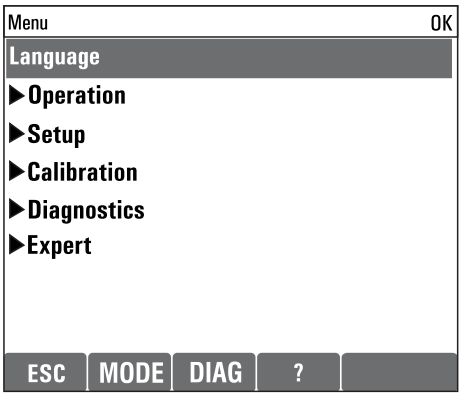

18 *Plain-text menu*

Display

Graphic display:
- Resolution: 240 x 160 pixel
- Back light with switch-off function
- Red display background for alarms alerts users to errors
- Transflective display technology for maximum contrast even in bright environments

Remote operation

Via HART (e.g. via HART modem and FieldCare)

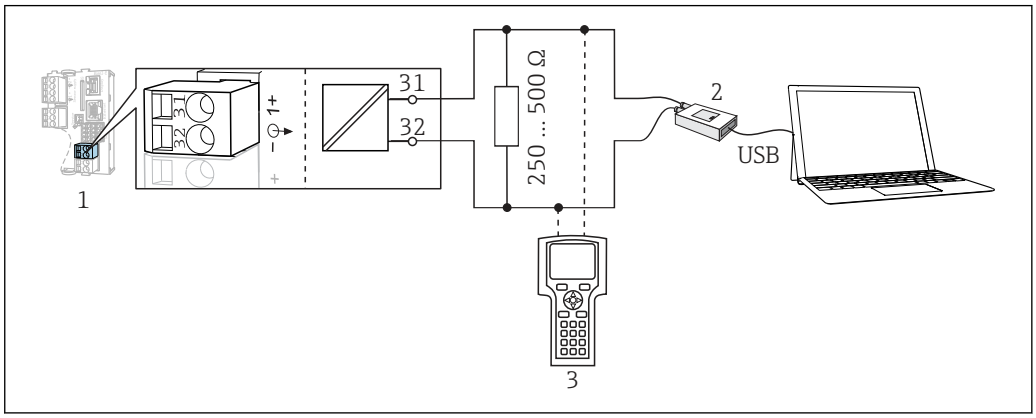

19 HART using modem

1 Device module Base2-E: current output 1 with HART
2 HART modem for connection to PC, e.g. Commubox FXA191 (RS232) or FXA195 [1] (USB)
3 HART handheld terminal

[1] Switch position "on" (substitutes the resistor)

Via PROFIBUS DP

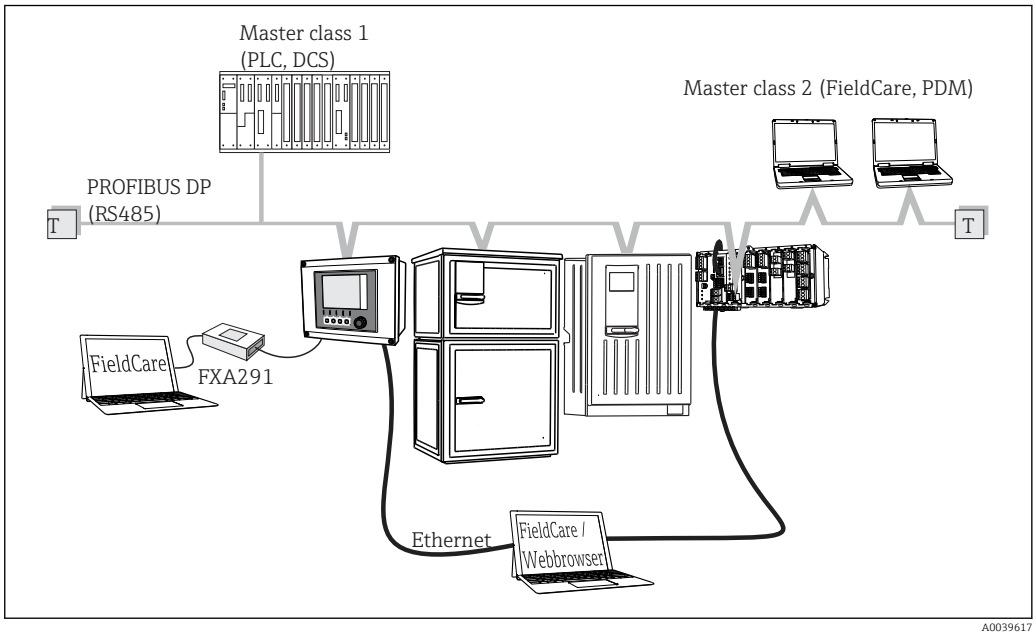

20 PROFIBUS DP

T Terminating resistor

Via Modbus RS485

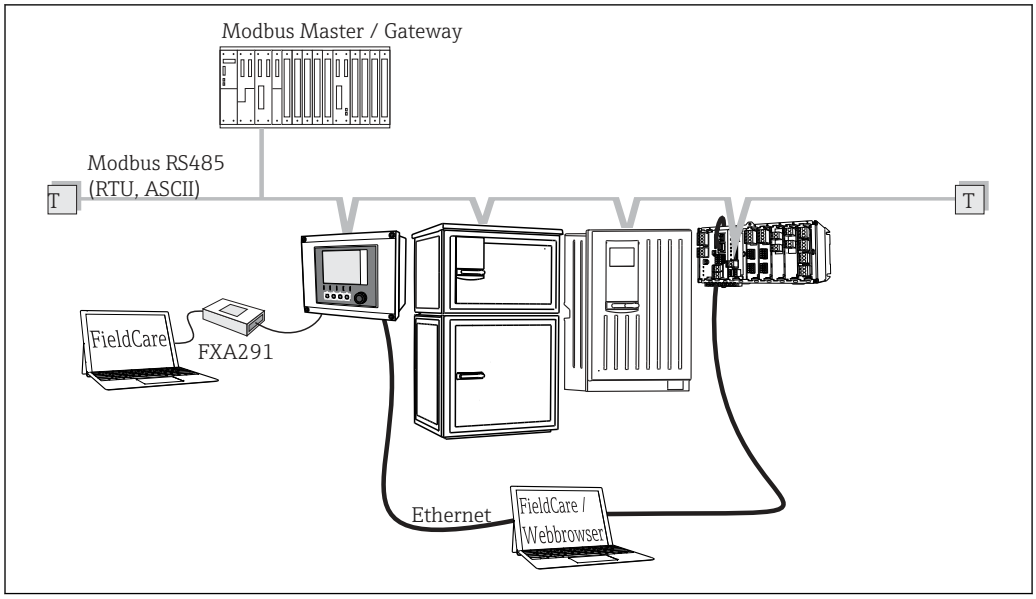

21 Modbus RS485

T Terminating resistor

Via Ethernet: web server/Modbus TCP/PROFINET/Ethernet/IP

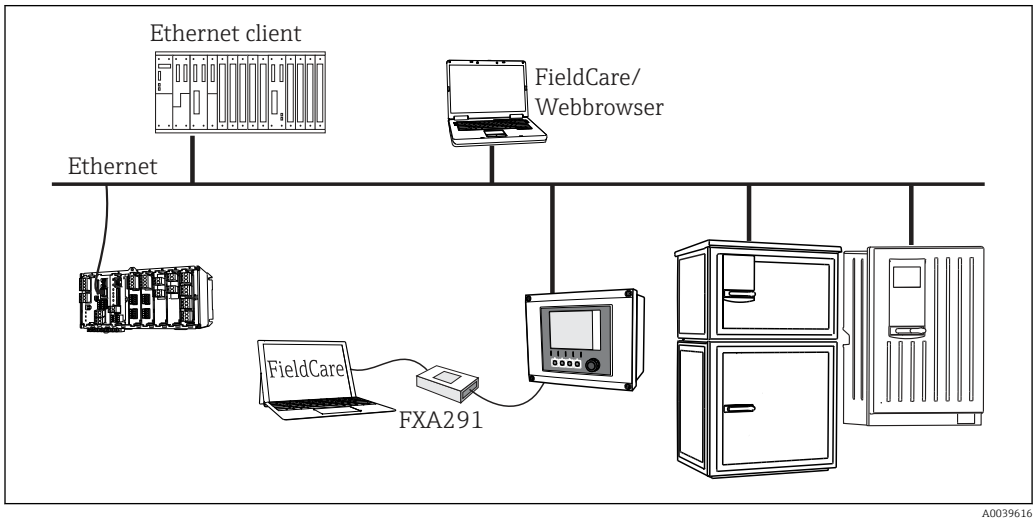

22 Modbus TCP or EtherNet/IP or PROFINET

Language packages

The language selected in the product structure is the operating language preset at the factory. All other languages can be selected using the menu.

- English (US)
- German
- Chinese (Simplified, PR China)
- Czech
- Dutch
- French
- Italian
- Japanese
- Polish
- Portuguese
- Russian
- Spanish
- Turkish

- Hungarian
- Croatian
- Vietnamese

The availability of other languages can be checked via the product structure at www.endress.com/ca80cod.

Certificates and approvals

Current certificates and approvals for the product are available at www.endress.com on the relevant product page:

1. Select the product using the filters and search field.
2. Open the product page.
3. Select **Downloads**.

Order information

Product page

www.endress.com/ca80cod

Product Configurator

1. **Configure**: Click this button on the product page.
2. Select **Extended selection**.
   ↳ The Configurator opens in a separate window.
3. Configure the device according to your requirements by selecting the desired option for each feature.
   ↳ In this way, you receive a valid and complete order code for the device.
4. **Accept**: Add the configured product to the shopping cart.

For many products, you also have the option of downloading CAD or 2D drawings of the selected product version.

5. **CAD**: Open this tab.
   ↳ The drawing window is displayed. You have a choice between different views. You can download these in selectable formats.

Scope of delivery

The scope of delivery comprises:
- 1 analyzer in the version ordered with optional hardware
- 1 x Brief Operating Instructions (hard copy)
- 1 x Maintenance Manual
- Suction strainer
- Cleaning brush for the dosing unit
- Optional accessories

Accessories

The following are the most important accessories available at the time this documentation was issued.

Listed accessories are technically compatible with the product in the instructions.

1. Application-specific restrictions of the product combination are possible.
   Ensure conformity of the measuring point to the application. This is the responsibility of the operator of the measuring point.
2. Pay attention to the information in the instructions for all products, particularly the technical data.
3. For accessories not listed here, please contact your Service or Sales Center.

Device-specific accessories

Installation accessories

Kit, post with bracket CA80, outd.
- Post 60 x 60 x 1800 mm, stainless steel 1.4571
- Post mount clamp CA80xx
- Kit installation instructions
- Order No. 71458285

Consumables

1. https://portal.endress.com/webapp/SparePartFinder
2. Specify the serial number or product code.

The following consumables are available:
- Reagents and standard solutions CY80COD
- CAC880, inlet and outlet hoses for CA80

Maintenance kit CAV880

https://portal.endress.com/webapp/SparePartFinder

Maintenance kit for CA80 for 1 year

Standard
- Waste valve hose (PharMed)
- Complete pump head, excluding motor
- Dispenser with dispenser holder, 2 x 10 ml
- Coupling with cone
- O-ring set, reactor
- O-ring of cleaning opening
- Filter mats (2x)
- Inlet hose (PTFE, black)
- Tubing cutter

Additionally for the wide measuring range
- Hose for dilution water (PTFE, black)
- Dilution valve hose (PharMed)
- Complete pump head, excluding motor
- Coupling with cone
- Dilution vessel with plug

Optional
- O-ring set, dosing unit
- In-process hoses (PTFE, white)
- Hose connector
- Reactor cuvette with heating wire, O-rings, T-sensor
- Dosing tubes with O-rings

Upgrade kits CAZ880

Kit for upgrade with dilution module for high measuring range
- Carrier board with dilution module
- Activation code
- Order No. CAZ880-CCCC

Kit for upgrade for low measuring range
- Activation code
- Order No. CAZ880-CCCB

Sensors

pH glass electrodes

Memosens CPS11E
- pH sensor for standard applications in process and environmental engineering
- Digital with Memosens 2.0 technology
- Product Configurator on the product page: www.endress.com/cps11e

Technical Information TI01493C

Memosens CPS41E
- pH sensor for process technology
- With ceramic junction and KCl liquid electrolyte
- Digital with Memosens 2.0 technology
- Product Configurator on the product page: www.endress.com/cps41e

Technical Information TI01495C

Memosens CPS71E
- pH sensor for chemical process applications
- With ion trap for poison-resistant reference
- Digital with Memosens 2.0 technology
- Product Configurator on the product page: www.endress.com/cps71e

Technical Information TI01496C

Memosens CPS91E
- pH sensor for heavily polluted media
- With open aperture
- Digital with Memosens 2.0 technology
- Product Configurator on the product page: www.endress.com/cps91e

Technical Information TI01497C

Memosens CPS31E
- pH sensor for standard applications in drinking water and swimming pool water
- Digital with Memosens 2.0 technology
- Product Configurator on the product page: www.endress.com/cps31e

Technical Information TI01574C

Ceramax CPS341D
- pH electrode with pH-sensitive enamel
- Meets highest demands of measuring accuracy, pressure, temperature, sterility and durability
- Product Configurator on the product page: www.endress.com/cps341d

Technical Information TI00468C

Memosens CPF81E
- pH sensor for mining operations, industrial water and wastewater treatment
- Digital with Memosens 2.0 technology
- Product Configurator on the product page: www.endress.com/cpf81e

Technical Information TI01594C

ORP electrodes

Memosens CPS12E
- ORP sensor for standard applications in process and environmental engineering
- Digital with Memosens 2.0 technology
- Product Configurator on the product page: www.endress.com/cps12e

Technical Information TI01494C

Memosens CPS42E
- ORP sensor for process technology
- Digital with Memosens 2.0 technology
- Product Configurator on the product page: www.endress.com/cps42e

Technical Information TI01575C

Memosens CPS72E
- ORP sensor for chemical process applications
- Digital with Memosens 2.0 technology
- Product Configurator on the product page: www.endress.com/cps72e

Technical Information TI01576C

Memosens CPS92E
- ORP sensor for use in heavily polluted media
- Digital with Memosens 2.0 technology
- Product Configurator on the product page: www.endress.com/cps92e

Technical Information TI01577C

Memosens CPF82E
- ORP sensor for mining operations, industrial water and wastewater treatment
- Digital with Memosens 2.0 technology
- Product Configurator on the product page: www.endress.com/cpf82e

Technical Information TI01595C

Conductivity sensors with inductive measurement of conductivity

Indumax CLS50D
- High-durability inductive conductivity sensor
- For standard and hazardous area applications
- With Memosens technology
- Product Configurator on the product page: www.endress.com/cls50d

Technical Information TI00182C

Conductivity sensors with conductive measurement of conductivity

Memosens CLS21E
- Digital conductivity sensor for media with medium or high conductivity
- Conductive measurement
- With Memosens 2.0
- Product Configurator on the product page: www.endress.com/cls21e

Technical Information TI01528C

Oxygen sensors

Memosens COS51E
- Amperometric oxygen sensor for water, wastewater and utilities
- Digital with Memosens 2.0 technology
- Product Configurator on the product page: www.endress.com/cos51e

Technical Information TI01620C

Memosens COS81E
- Hygienic optical oxygen sensor with maximum measurement stability over multiple sterilization cycles
- Digital with Memosens 2.0 technology
- Product Configurator on the product page: www.endress.com/cos81e

Technical Information TI01558C

Memosens COS22E
- Hygienic amperometric oxygen sensor with maximum measurement stability over multiple sterilization cycles
- Digital with Memosens 2.0 technology
- Product Configurator on the product page: www.endress.com/cos22e

Technical Information TI01619C

Chlorine dioxide and chlorine sensors

Memosens CCS50E
- Membrane-covered amperometric sensor for chlorine dioxide
- With Memosens technology
- Product Configurator on the product page: www.endress.com/ccs50e

Technical Information TI01353C

Memosens CCS51E
- Sensor for measuring free available chlorine
- Product Configurator on the product page: www.endress.com/ccs51e

Technical Information TI01423C

Ion-selective sensors

ISEmax CAS40D
- Ion selective sensors
- Product Configurator on the product page: www.endress.com/cas40d

Technical Information TI00491C

Turbidity sensors

Turbimax CUS51D
- For nephelometric measurements of turbidity and solids in wastewater
- 4-beam scattered light method
- With Memosens technology
- Product Configurator on the product page: www.endress.com/cus51d

Technical Information TI00461C

Turbimax CUS52D
- Hygienic Memosens sensor for turbidity measurement in drinking water, process water and in utilities
- With Memosens technology
- Product Configurator on the product page: www.endress.com/cus52d

Technical Information TI01136C

SAC and nitrate sensors

Viomax CAS51D
- SAC and nitrate measurement in drinking water and wastewater
- With Memosens technology
- Product Configurator on the product page: www.endress.com/cas51d

Technical Information TI00459C

Interface measurement

Turbimax CUS71D
- Immersion sensor for interface measurement
- Ultrasonic interface sensor
- Product Configurator on the product page: www.endress.com/cus71d

Technical Information TI00490C

Cable junction with Velcro strip
- 4 pieces, for sensor cable
- Order No. 71092051

Communication-specific accessories

Additional functionality

▶ Always quote the serial number of your device when ordering activation codes.

Order code	Communication; software
51516983	Commubox FXA291 (hardware)
71127100	SD card with Liquiline Firmware, 1 GB, Industrial Flash Drive
XPC0018	Activation code for EtherNet/IP + web server
XPC0020	Activation code for Modbus TCP + web server
XPC0021	Activation code for web server for BASE2

Order code	Communication; software
XPC0022	Activation code for PROFINET + web server for BASE2
XPC0024	Activation code for Profibus DP for module 485
XPC0025	Activation code for Modbus RS485 for module 485
71249548	Kit CA80: activation code for 1st digital sensor input
71249555	Kit CA80: activation code for 2nd digital sensor input

	Retrofit kits
71136999	Kit CSF48/CA80: retrofit service interface (CDI flange connector, counter nut)
71111053	Kit module AOR: 2 x relay, 2 x analog output 0/4 to 20 mA
71125375	Kit module 2R: 2 x relay
71125376	Kit module 4R: 4 x relay
71135632	Kit module 2AO: 2 x analog output 0/4 to 20 mA
71135633	Kit module 4AO: 4 x analog output 0/4 to 20 mA
71135631	Kit module 2DS: 2 x digital sensor, Memosens
71135634	Kit module 485: PROFIBUS DP or Modbus RS485. This requires an additional activation code which can be ordered separately.
71135638	Kit module DIO: 2 x digital input; 2 x digital output; auxiliary power supply for digital output
71135639	Kit module 2AI: 2 x analog input 0/4 to 20 mA
71140888	Upgrade kit module 485 + Profibus DP
71140889	Upgrade kit module 485 + Modbus RS485
71141366	Kit, extension backplane module

Software

Memobase Plus CYZ71D
- PC software to support laboratory calibration
- Visualization and documentation of sensor management
- Sensor calibrations stored in database
- Product Configurator on the product page: www.endress.com/cyz71d

Technical Information TI00502C

Field Data Manager Software MS20/21
- PC software for central data management
- Visualization of series of measurements and logbook events
- SQL database for secure data storage

System components

Measuring cables

Memosens data cable CYK10
- For digital sensors with Memosens technology
- Product Configurator on the product page: www.endress.com/cyk10

Technical Information TI00118C

Memosens data cable CYK11
- Extension cable for digital sensors with Memosens protocol
- Product Configurator on the product page: www.endress.com/cyk11

Technical Information TI00118C

SD card

- Industrial Flash Drive, 1 GB
- Order number: 71110815



www.addresses.endress.com

Endress+Hauser

People for Process Automation