TI00108T/09/EN/17.24-00
71661970
2024-07-31

Technical Information
Modular RTD thermomers TH11 and TH12

General purpose RTD with terminal head or conductor extension lead wires for process and laboratory applications



Application

The TH11 and TH12 temperature sensors are RTDs designed for use in the process industry or factory automation type of environment. They consist of a measurement probe with a RTD, insulation and sheath. Among other applications the sensors can be used on:

- Heat exchangers, power & recovery area
- Carbon regeneration furnace or dryers
- Flue Gas, compressor stations
- Process reactors

Head transmitter

All Endress+Hauser transmitters are available with enhanced accuracy and reliability compared to directly wired sensors. Easy customizing by choosing one of the following outputs and communication protocols:

- Analog output 4 to 20 mA, with or without HART
- PROFIBUS® PA
- FOUNDATION Fieldbus™
- PROFINET® with Ethernet-APL
- Bluetooth® connectivity (optional)

Field transmitter

Temperature field transmitters with HART® or FOUNDATION Fieldbus™ protocol for highest reliability in harsh industrial environments. Backlit display with large measured value, bargraph and fault condition indication for ease of reading.

Your benefits

- High flexibility due to modular assembly with standard terminal heads and customized immersion length
- One source shopping for temperature measurement solutions. World class transmitter with integrated sensor offering for heavy process industry applications. Remove and install straight out of the box!
- Improved galvanic isolation on most devices (2 kV)

Endress+Hauser
People for Process Automation

[Continued from front page]

- Simplified model structure: Competitively priced, offers great value. Easy to order and reorder. A single model number includes sensor and transmitter assembly for a complete point solution
- All iTEMP transmitters provide long term stability ≤ 0.05 % per year
- Fast response time with reduced/tapered tip form

Table of contents

Function and system design 4
Measuring principle 4
Measuring system 4
Equipment architecture 5
Measurement range 5

Output 5
Output signal 5
Family of temperature transmitters 6
Galvanic isolation 6

Power supply 7
Terminal assignment 7
Wire specifications 10

Performance characteristics 11
Response time 11
Accuracy 11
Transmitter long-term stability 12
Dielectric strength 12
Self heating 12
Calibration specifications 12

Installation 12
Orientation 12
Installation instructions 13

Environment 13
Ambient temperature range 13
Shock and vibration resistance 13

Process 14
Process pressure limits 14

Mechanical construction 15
Design, dimensions 15
Weight 16
Material 16
Process connection 17
Housing 18
Field transmitters 21

Certificates and approvals 22

Ordering information 22

Accessories 23
Device-specific accessories 23
Service-specific accessories 23

Documentation 24

Function and system design

Measuring principle

Resistance thermometer (RTD)

These resistance thermometers use a Pt100 temperature sensor according to IEC 60751. The temperature sensor is a temperature-sensitive platinum resistor with a resistance of 100 Ω at 0 °C (32 °F) and a temperature coefficient α = 0.003851 °C^{-1}.

There are generally two different kinds of platinum resistance thermometers:

- **Wire wound (WW):** Here, a double coil of fine, high-purity platinum wire is located in a ceramic support. This is then sealed top and bottom with a ceramic protective layer. Such resistance thermometers not only facilitate very reproducible measurements but also offer good long-term stability of the resistance/temperature characteristic within temperature ranges up to 600 °C (1 112 °F). This type of sensor is relatively large in size and it is comparatively sensitive to vibrations.
- **Thin film platinum resistance thermometers (TF):** A very thin, ultrapure platinum layer, approx. 1 µm thick, is vaporized in a vacuum on a ceramic substrate and then structured photolithographically. The platinum conductor paths formed in this way create the measuring resistance. Additional covering and passivation layers are applied and reliably protect the thin platinum layer from contamination and oxidation, even at high temperatures.

The primary advantages of thin film temperature sensors over wire wound versions are their smaller sizes and better vibration resistance. A relatively low principle-based deviation of the resistance/temperature characteristic from the standard characteristic of IEC 60751 can frequently be observed among TF sensors at high temperatures. As a result, the tight limit values of tolerance category A as per IEC 60751 can only be observed with TF sensors at temperatures up to 200 °C (392 °F).

Measuring system

Endress+Hauser offers a complete portfolio of optimized components for the temperature measuring point – everything you need for the seamless integration of the measuring point into the overall facility. This includes:

- Power supply unit/barrier
- Display units
- Overvoltage protection

For more information, see the brochure 'System Components - Solutions for a Complete Measuring Point' (FA00016K)

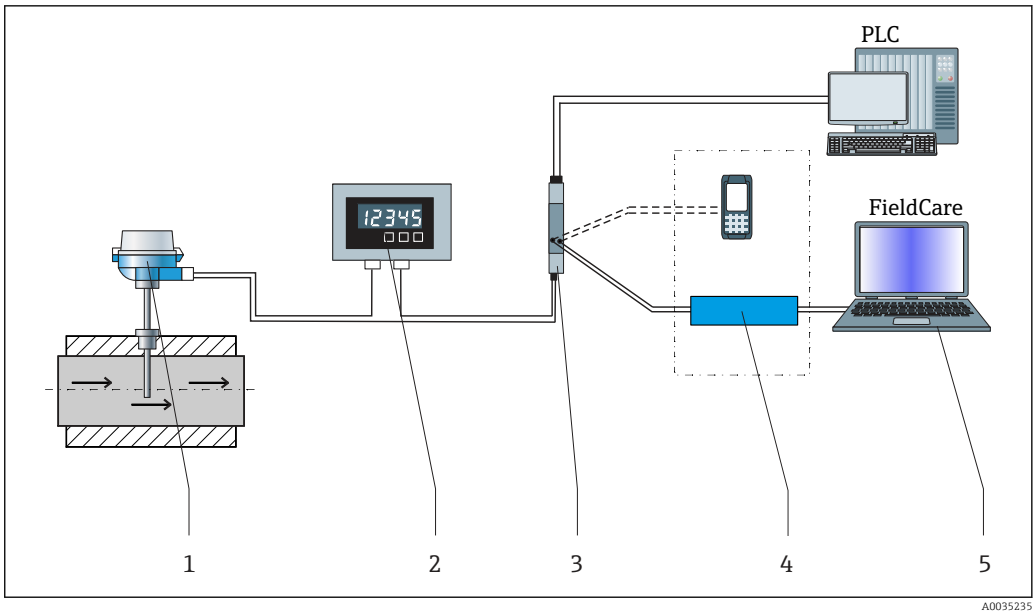

1 *Example of application, measuring point layout with additional Endress+Hauser components*

1 *Installed thermometer with HART® communication protocol*
2 *RIA15 loop powered process display - It is integrated in the current loop and displays the measuring signal or HART® process variables in digital form. The process display unit does not require an external power supply. It is powered directly from the current loop. More information on this can be found in the Technical Information.*
3 *Active barrier RN42 - The RN42 (17.5 V_{DC}, 20 mA) active barrier has a galvanic isolated output for supplying voltage to loop powered transmitters. The universal power supply works with an input supply voltage of 24 to 230 V AC/DC, 0/50/60 Hz, which means that it can be used in all international power grids. More information on this can be found in the Technical Information.*
4 *Communication examples: HART® handheld communicator FieldXpert, Commubox FXA195 for intrinsically safe HART® communication with FieldCare via the USB interface, Bluetooth® technology with SmartBlue App.*
5 *FieldCare is a FDT-based plant asset management tool from Endress+Hauser, more details see section 'accessories'.*

Equipment architecture

The single and duplex element RTDs are designed to measure temperature in a variety of process and laboratory applications. These RTDs are specifically designed for use in two different process temperature ranges and they will provide accurate and repeatable temperature measurement through a broad range of −200 to 600 °C (−328 to 1 112 °F). Low range thin film RTDs −50 to 200 °C (−58 to 392 °F) are constructed using silver plated copper internal leads, PTFE wire insulations with potting compounds to resist moisture penetration. High range RTDs −200 to 600 °C (−328 to 1 112 °F) are constructed with nickel internal leads inside swaged MgO insulated cable to allow higher temperature measurements at the RTD element and to provide higher temperature lead protection along the sheath.

Measurement range

Construction	Model code (class and type of sensor)	Maximum range
Low temperature range (TF - thin film sensor)	TH11-_ _ _ (A/C/E/G/J/L) _ _ _ _ _ _	−50 to +200 °C (−58 to +392 °F)
	TH12-_ _ _ (A/C/E/G/J/L) _ _ _ _ _ _	
High temperature range (WW - wire wound sensor)	TH11-_ _ _ (B/D/F/H/K/M) _ _ _ _ _ _	−200 to +600 °C (−328 to +1 112 °F)
	TH12-_ _ _ (B/D/F/H/K/M) _ _ _ _ _ _	

Output

Output signal

Generally, the measured value can be transmitted in one of two ways:

- Directly-wired sensors - sensor measured values forwarded without a transmitter.
- Via all common protocols by selecting an appropriate Endress+Hauser iTEMP temperature transmitter. All the transmitters listed below are mounted directly in the terminal head or as field transmitter and wired with the sensory mechanism.

Family of temperature transmitters

Thermometers fitted with iTEMP transmitters are an installation-ready complete solution to improve temperature measurement by significantly increasing measurement accuracy and reliability, when compared to direct wired sensors, as well as reducing both wiring and maintenance costs.

4 to 20 mA head transmitters
They offer a high degree of flexibility, thereby supporting universal application with low inventory storage. The iTEMP transmitters can be configured quickly and easily at a PC. Endress+Hauser offers free configuration software which can be downloaded from the Endress+Hauser Website.

HART® head transmitters
The iTEMP transmitter is a 2-wire device with one or two measuring inputs and one analog output. The device not only transfers converted signals from resistance thermometers and thermocouples, it also transfers resistance and voltage signals using HART® communication. Swift and easy operation, visualization and maintenance using universal configuration software like FieldCare, DeviceCare or FieldCommunicator 375/475. Integrated Bluetooth® interface for the wireless display of measured values and configuration via E+H SmartBlue (app), optional.

PROFIBUS® PA head transmitters
Universally programmable iTEMP transmitter with PROFIBUS® PA communication. Conversion of various input signals into digital output signals. High measurement accuracy over the complete ambient temperature range. PROFIBUS PA functions and device-specific parameters are configured via fieldbus communication.

FOUNDATION Fieldbus™ head transmitters
Universally programmable iTEMP transmitter with FOUNDATION Fieldbus™ communication. Conversion of various input signals into digital output signals. High measurement accuracy over the complete ambient temperature range. All iTEMP transmitters are approved for use in all the main process control systems. The integration tests are performed in Endress+Hauser's 'System World'.

Head transmitter with PROFINET® and Ethernet-APL
The iTEMP transmitter is a 2-wire device with two measurement inputs. The device not only transfers converted signals from resistance thermometers and thermocouples, it also transfers resistance and voltage signals using the PROFINET® protocol. Power is supplied via the 2-wire Ethernet connection according to IEEE 802.3cg 10Base-T1. The iTEMP transmitter can be installed as an intrinsically safe electrical apparatus in Zone 1 hazardous areas. The device can be used for instrumentation purposes in the terminal head form B (flat face) according to DIN EN 50446.

Head transmitter with IO-Link®
The iTEMP transmitter is an IO-Link® device with a measurement input and an IO-Link® interface. It offers a configurable, simple and cost-effective solution thanks to digital communication via IO-Link®. The device is mounted in a terminal head form B (flat face) as per DIN EN 5044.

Advantages of the iTEMP transmitters:
- Double or single sensor input (optionally for certain transmitters)
- Attachable display (optionally for certain transmitters)
- Unsurpassed reliability, accuracy and long-term stability in critical processes
- Mathematical functions
- Monitoring of the thermometer drift, sensor backup functionality, sensor diagnostic functions
- Sensor-transmitter matching based on Callendar van Dusen coefficients (CvD).

Field transmitter
Field transmitter with HART®, FOUNDATION Fieldbus™ or PROFIBUS® PA communication and backlighting. Can be read easily from a distance, in sunlight and at night. Large measurement value format, bar graphs and faults are displayed. The benefits are: dual sensor input, highest reliability in harsh industrial environments, mathematical functions, thermometer drift monitoring and sensor back-up functionality, corrosion detection.

Galvanic isolation

Galvanic isolation of Endress+Hauser iTEMP transmitters

Transmitter type	Sensor
TMT162 HART® Field transmitter	U = 2 kV AC
TMT71	
TMT72 HART®	
TMT82 HART®	
TMT84 PA	

Transmitter type	Sensor
TMT85 FF	
TMT142B	

Power supply

Terminal assignment

Type of sensor connection

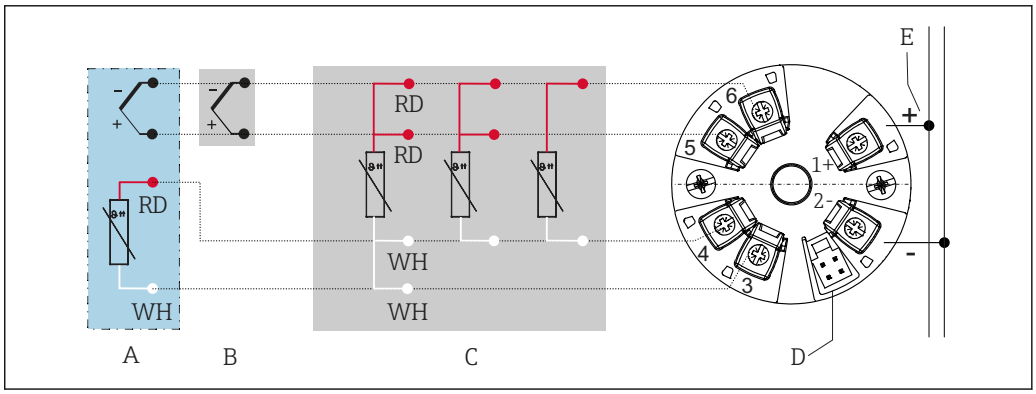

A0047173

2 *Head mounted transmitter TMT31 (single input)*

1 *RTD sensor input: 4-, 3- and 2-wire*
2 *Power supply*
3 *CDI interface*

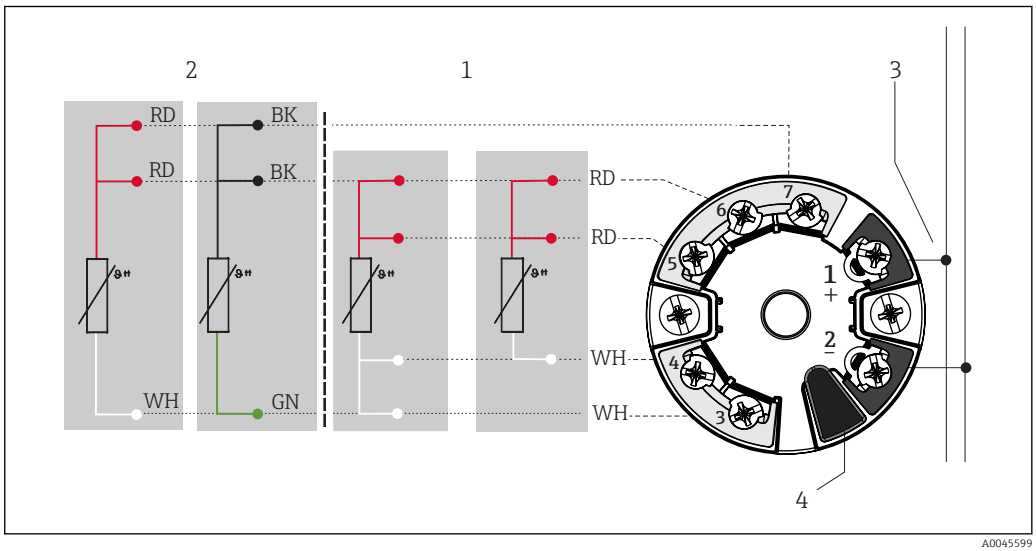

A0045599

3 *Head mounted transmitter TMT8x (dual input)*

1 *Sensor input 1, RTD, 4- and 3-wire*
2 *Sensor input 2, RTD, 3-wire*
3 *Bus connection and supply voltage*
4 *Display connection*

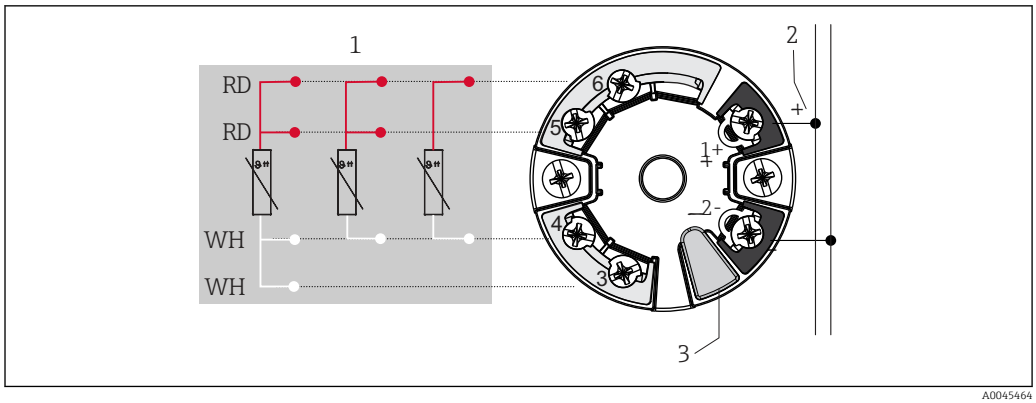

4 *Head mounted transmitter TMT7x (single input)*

1 *Sensor Input*
2 *Bus connection and supply voltage*
3 *Display connection*

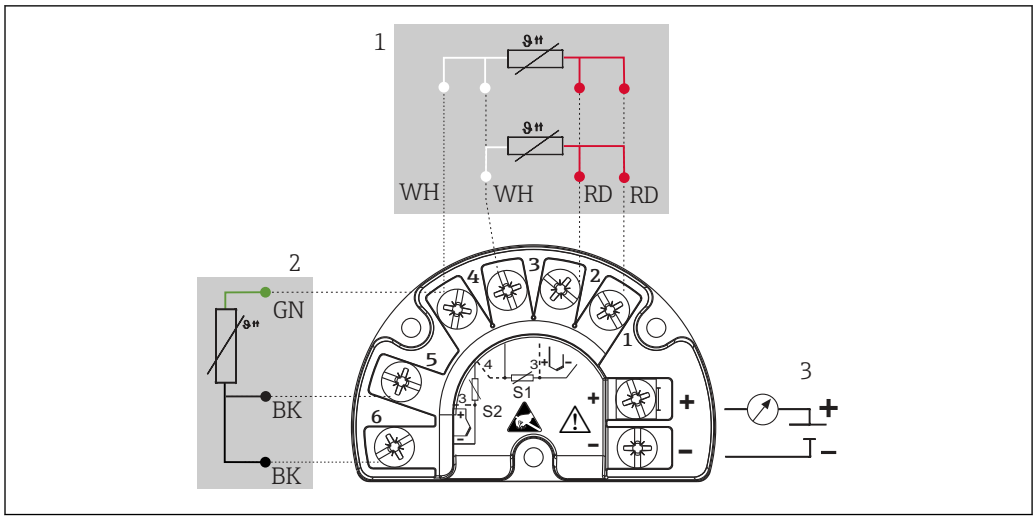

5 *Field mounted transmitter TMT162 (dual input)*

1 *Sensor 1*
2 *Sensor 2 (not TMT142B)*
3 *Power supply field transmitter and analog output 4 to 20 mAor bus connection*

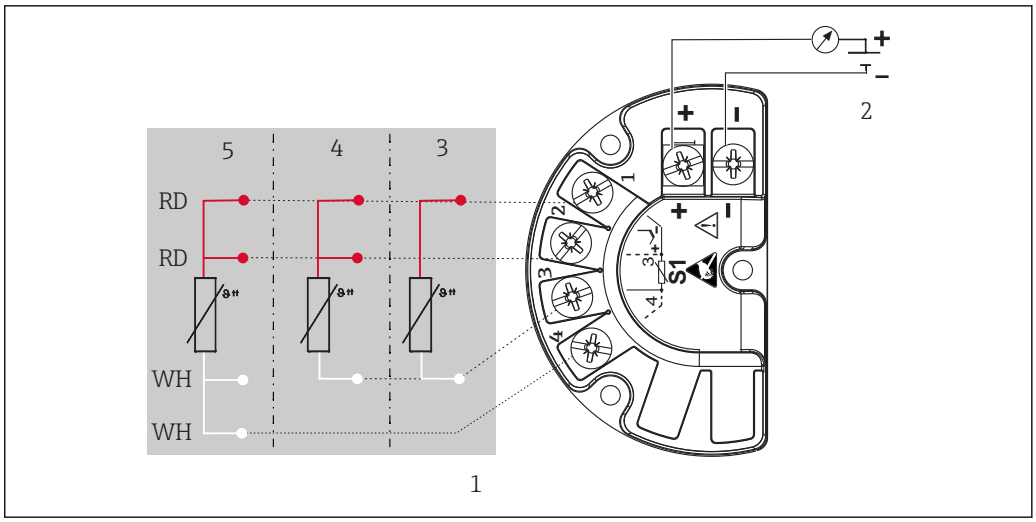

6 *Field mounted transmitter TMT142B (single Input)*

1 *Sensor input RTD*
2 *Power supply field transmitter and analog output4 to 20 mA, HART®-Signal*
3 *2-wire*
4 *3-wire*
5 *4-wire*

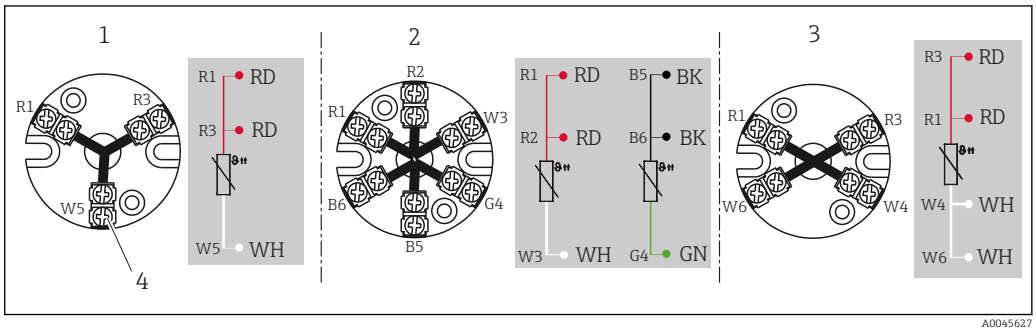

7 *Terminal block mounted*

1 *3-wire single*
2 *2 x 3-wire single*
3 *4-wire single*
4 *Outside screw*

The blocks and transmitters are shown as they sit inside the heads in reference to the conduit opening.

Integrated overvoltage protection

The integrated overvoltage protection module can be ordered as an optional extra [1]. The module protects the electronics from damage from overvoltage. Overvoltage occurring in signal cables (e.g. 4 to 20 mA, communication lines (fieldbus systems) and power supply is diverted to ground. The functionality of the transmitter is not affected as no problematic voltage drop occurs.

Connection data:

Maximum continuous voltage (rated voltage)	U_C = 42 V_{DC}
Nominal current	I = 0.5 A at $T_{amb.}$ = 80 °C (176 °F)

1) Available for the field transmitter with HART® 7 specification

Surge current resistance ▪ Lightning surge current D1 (10/350 µs) ▪ Nominal discharge current C1/C2 (8/20 µs)	 ▪ I_{imp} = 1 kA (per wire) ▪ I_n = 5 kA (per wire) I_n = 10 kA (total)
Temperature range	−40 to +80 °C (−40 to +176 °F)
Series resistance per wire	1.8 Ω, tolerance ±5 %

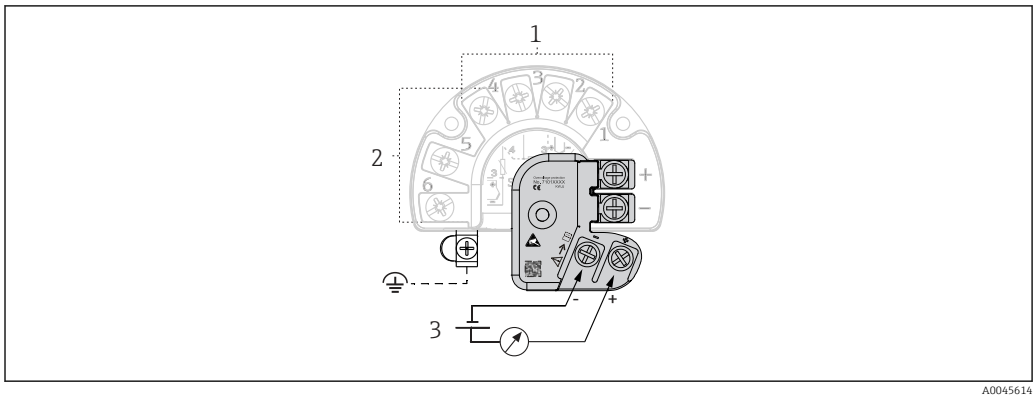

A0045614

8 Electrical connection of the overvoltage protection

1 Sensor 1
2 Sensor 2
3 Bus connection and supply voltage

Grounding

The device must be connected to the potential equalization. The connection between the housing and the local ground must have a minimum cross-section of 4 mm² (13 AWG) . All ground connections must be secured tightly.

Fieldbus connector

Type (dimensions in mm (in))	Specification	
Fieldbus connector to PROFIBUS® -PA or FOUNDATION Fieldbus™ 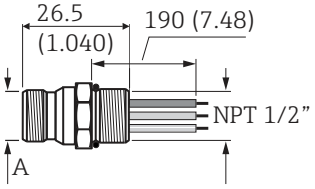 A0028083 *A M12 on PROFIBUS® -PA connector or 7/8-16 UNC on FOUNDATION Fieldbus™ connector*	▪ Ambient temperature: −40 to 150 °C (−40 to 300 °F) ▪ Degree of protection IP 67 Wiring diagram: 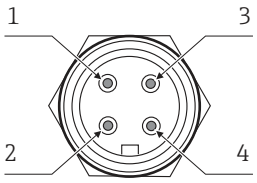 A0006023	
	PROFIBUS® -PA Pos. 1: grey (shield) Pos. 2: brown (+) Pos. 3: blue (-) Pos. 4: not connected	FOUNDATION Fieldbus™ Pos. 1: blue (-) Pos. 2: brown (+) Pos. 3: not connected Pos. 4: ground (green/yellow)

Wire specifications

TH11
24 AWG, 19 strand silver plated copper with 0.010 in PTFE extruded outer. ⅛ in sensors have 28 AWG seven strand wires with the same extrusion.

TH12
24 AWG, seven strand silver plated copper with 0.010 in PTFE, then 0.015 in FEP outer jacket, ⅛ in sensors are 28 AWG, seven strand SPC, 0.010 in PTEFE, 0.015 in FEP white outer jacket. Flex armor is 0.272 in nominal OD, 304SS 0.010 in thick, square lock style.

The maximum temperature for the extension cable is +200 °C (+392 °F)

Electrical connection
Flying leads, standard 139.7 mm (5.5 in) for wiring in connection head, head mounted transmitter or terminal block mounted, and for wiring with TMT162 or TMT142 assemblies

Design of leads	
Flying leads 139.7 mm (5.5 in) with brass crimped sleeves	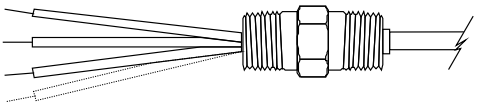 A0026119

Performance characteristics

Response time

63% response time per ASTM E644

Construction	RTD Ø1/8"	RTD Ø3/16"	RTD Ø1/4"	RTD Ø3/8 " reduced 3/16"
High temperature range	2 s	2 s	3 s	Not available
Low temperature range	3 s	7 s	9 s	6 s

Response time for the sensor assembly without transmitter.

Accuracy

RTD resistance thermometer as per IEC 60751

Class	Max. tolerances (°C)		Characteristics
Cl. AA, former 1/3 Cl. B	± (0.1 + 0.0017 · |t| [1)])		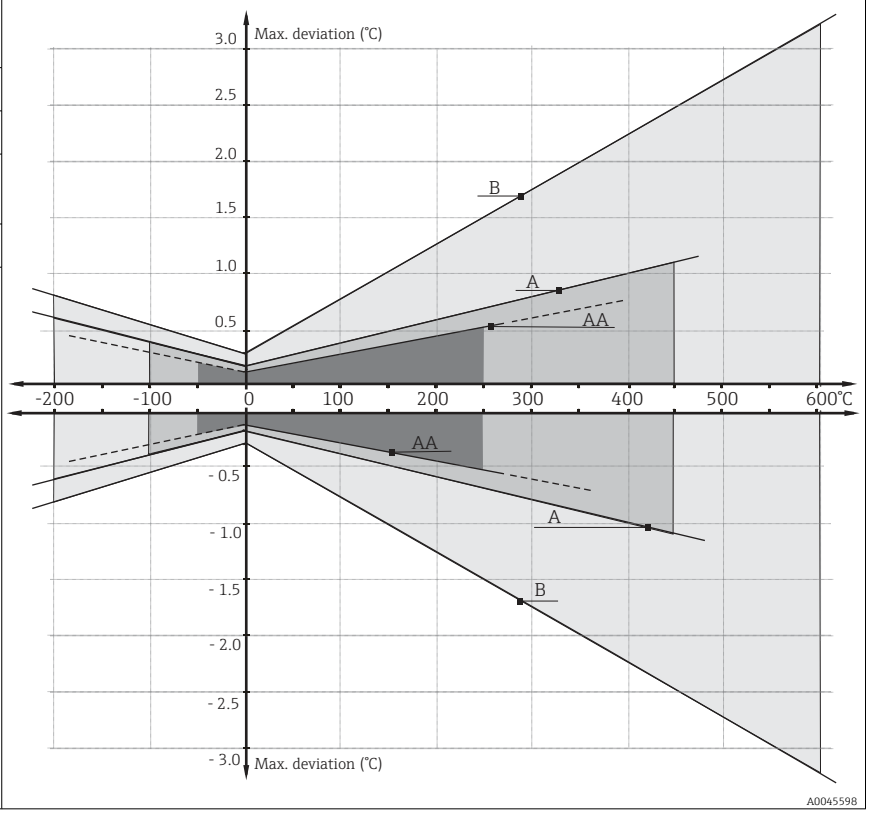
Cl. A	± (0.15 + 0.002 · |t|)		
Cl. B	± (0.3 + 0.005 · |t|)		
Temperature ranges for compliance with the tolerance classes			
Wire wound sensor (WW)	Cl. A	Cl. AA	
	– 100 to +450 °C (– 148 to +842 °F)	–50 to +250 °C (– 58 to +482 °F)	

A0045598

Class	Max. tolerances (°C)		Characteristics
Thin-film sensor (TF)	Cl. A	Cl. AA	
	−30 to +300 °C (−22 to +572 °F)	0 to +150 °C (+32 to +302 °F)	

1) |t| = absolute value °C

In order to obtain the maximum tolerances in °F, the results in °C must be multiplied by a factor of 1.8.

Transmitter long-term stability

≤ 0.1 °C (0.18 °F)/year or ≤ 0.05% / year

Data under reference conditions; % relates to the set span. The larger value applies.

Dielectric strength

The units are factory tested with 500 V_{AC} for one minute between live parts (terminals) and exposed non-current-carrying metal parts (e.g. probe sheath).

Self heating

RTD elements are passive resistances that are measured using an external current. This measurement current causes a self-heating effect in the RTD element itself which in turn creates an additional measurement error. In addition to the measurement current, the size of the measurement error is also affected by the temperature conductivity and flow velocity of the process. This self-heating error is negligible when an Endress+Hauser iTEMP temperature transmitter (very small measurement current) is connected.

Calibration specifications

The manufacturer provides comparison temperature calibrations from −20 to +300 °C (−4 to +573 °F) on the ITS-90 (International Temperature Scale). Calibrations are traceable to standards maintained by the National Institute of Standards and Technology (NIST). Calibration services are in conformance with ASTM E220. The report of calibration is referenced to the serial number of the RTD assembly.

Three point calibrations are provided, given that the specified temperatures are within the recommended range and the minimum length requirements are met as specified. The minimum length is based on overall length 'x' of the spring loaded insert.

Installation

Orientation

No restrictions

Installation instructions

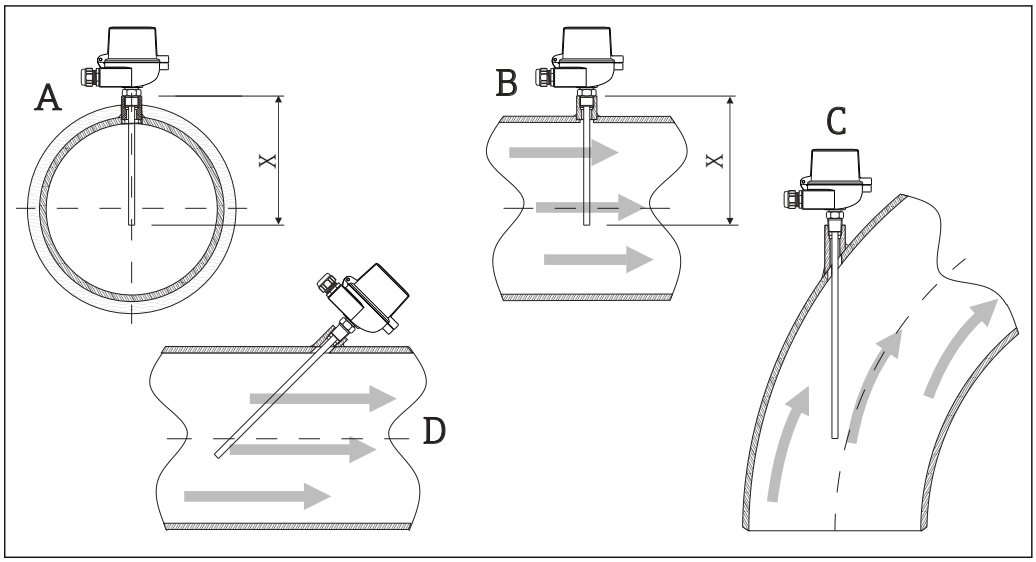

9 *Installation examples*

A-B In pipes with a small cross section the sensor tip should reach or extend slightly past the center line of the pipe (=X).
C-D Tilted installation

The immersion length of the thermometer influences the accuracy. If the immersion length is too small then errors in the measurement are caused by heat conduction via the process connection and the container wall. If installing into a pipe then the immersion length should be at least half of the pipe diameter. A further solution could be an angled (tilted) installation (see C-D). When determining the immersion length all thermometer parameters and the process to be measured must be taken into account (e.g. flow velocity, process pressure).

- Installation possibilities: Pipes, tanks or other plant components
- Minimum immersion length should be 10 times the OD of the sheath, nominal.

Environment

Ambient temperature range

Terminal head	Temperature in °C (°F)
Without mounted head transmitter	Depends on the terminal head used and the cable gland or fieldbus connector, see 'Terminal heads' section
With mounted head transmitter	−40 to 85 °C (−40 to 185 °F) SIL mode (HART 7 transmitter): −40 to 70 °C (−40 to 158 °F)
With mounted head transmitter and display	−20 to 70 °C (−4 to 158 °F)
With mounted field transmitter	▪ Without display: −40 to 85 °C (−40 to 185 °F) ▪ With display and/or integrated overvoltage protection module: −40 to +80 °C (−40 to +176 °F) ▪ SIL mode: −40 to +75 °C (−40 to +167 °F)

Shock and vibration resistance

4 g/2 to 150 Hz as per IEC 60068-2-6

Process

Process pressure limits

p/T load curve example according to Dittrich

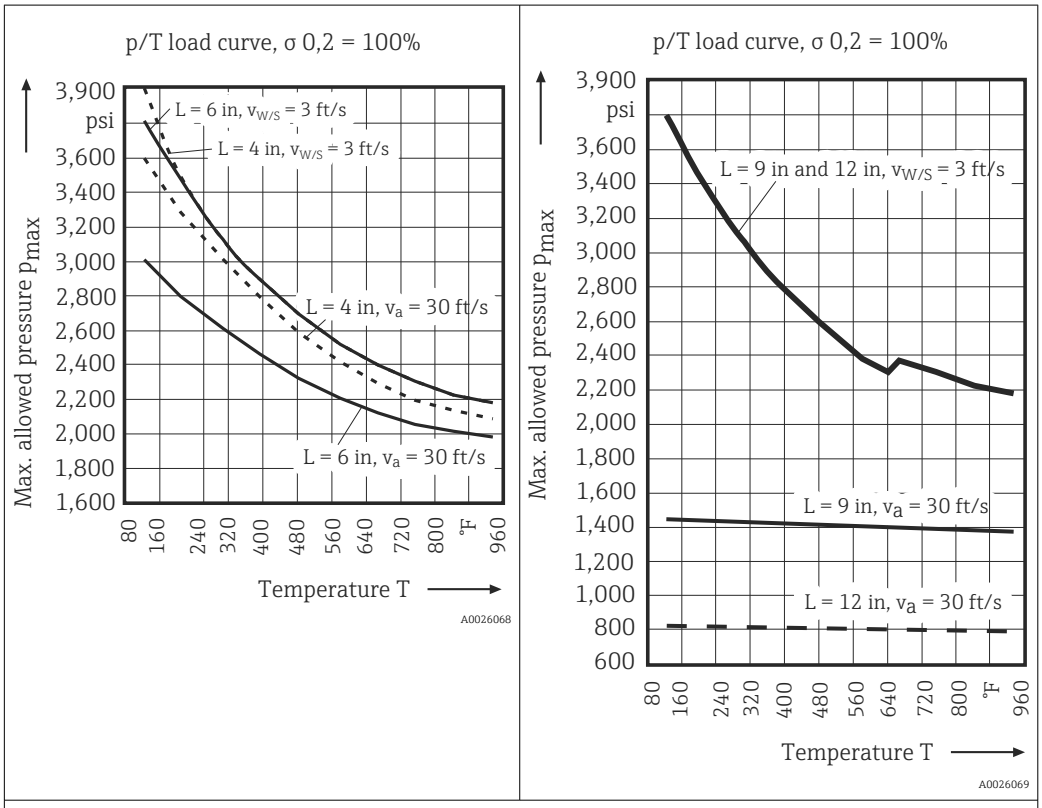

L = Insertion length
v_a = Flow velocity air
$v_{w/s}$ = Flow velocity water or stream
Example calculation: Probe = 316SS
Sheath Ø = ¼" ; 0.028" wall thickness

Avoid resonance frequency as this will cause damage to the probe!

- L = 4 and 6 in:
  Resonance frequency occurs when permanent flow velocity is at 18.1, 22.6 or 27.1 ft/s (air) for 6 in and/or 40.5, 50.6 or 60.8 ft/s (air) for 4 inch probe (T = 482 °F, p = 2700/2600 psi).
- L = 9 and 12 in:
  Resonance frequency occurs when permanent flow velocity is at 8.1, 10.1 or 12.1 ft/s (air) for 9 inch and/or 4.6, 5.7 or 6.8 ft/s (air) for 12 inch probe (T = 482 °F, p = 2600 psi).

The calculation was done for pipes only, for MgO insulated sensors the values might be higher. In any case for different lengths, other materials, variation in sheath diameter or wall thicknesses, stress analysis is recommended. Failures are caused by forces imposed by static pressure, steady state flow, and vibration.

Max. allowable process pressure (PSIG) for instrumentation with one time adjustable compression fittings.

Temperature	**⅛" NPT and ¼" NPT compression fitting**			
°C (°F)	**Sheath Ø = ⅛"**	**Sheath Ø = 3⁄16"**	**Sheath Ø = ¼"**	**Sheath Ø = ⅜" 1)**
−28 to 204 °C (−20 to 300 °F)	2 850	3 150	3 350	3 900
204 °C (400 °F)	2 750	3 050	3 250	3 800
260 °C (500 °F)	2 550	2 850	3 000	3 500
316 °C (600 °F)	2 400	2 700	2 850	3 300
371 °C (700 °F)	2 350	2 600	2 750	3 200

Temperature	⅛" NPT and ¼" NPT compression fitting			
°C (°F)	Sheath Ø = ⅛"	Sheath Ø = 3⁄16"	Sheath Ø = ¼"	Sheath Ø = ⅜" 1)
427 °C (800 °F)	2 300	2 550	2 650	3 100
482 °C (900 °F)	2 200	2 450	2 600	3 050
538 °C (1 000 °F)	2 100	2 300	2 450	2 850

1) not available with compression fittings ⅛" NPT

Re-adjustable compression fittings are not intended to be used for pressure retaining applications and should only be used for the mechanical holding of sensors.

Mechanical construction

Design, dimensions

For the values related to these graphics please refer to the tables and equations below.

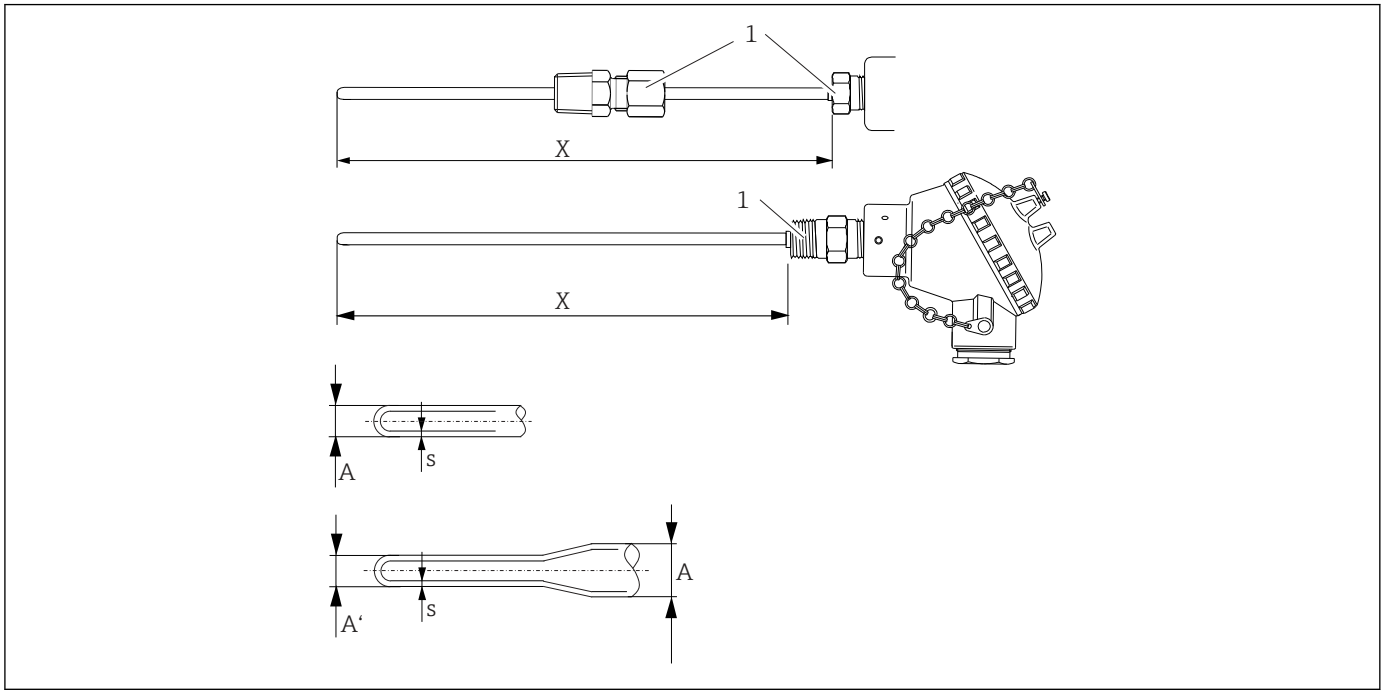

A0051904

10 Design of TH11

1 Process connection: Thread, none or compression fitting
A Sheath diameter
A' Sheath diameter with reduced tip
s Wall thickness

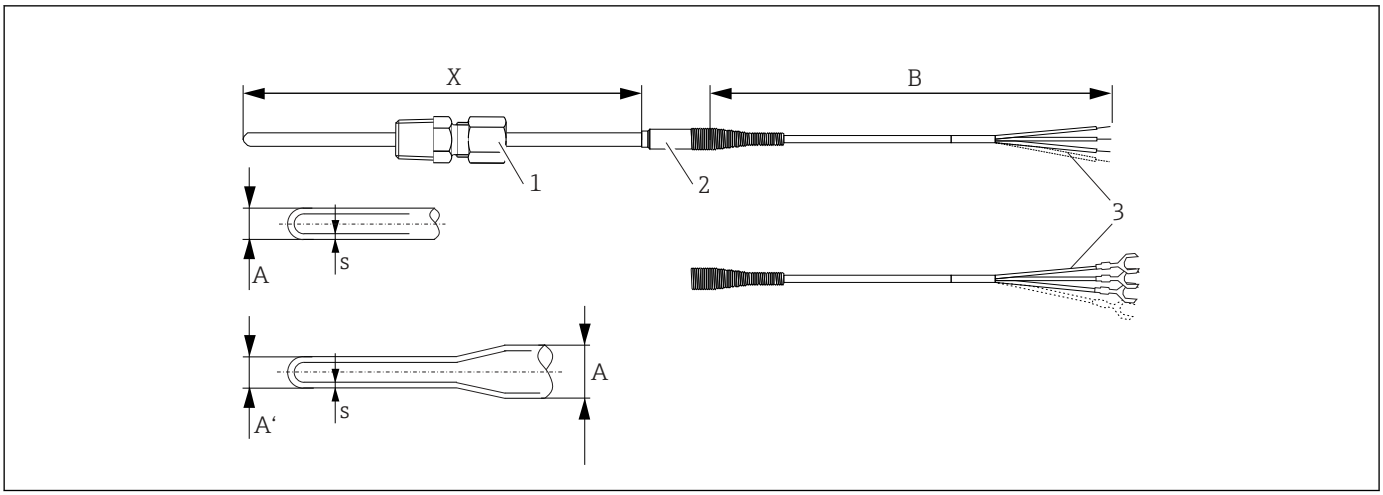

A0029335

11 Design of TH12

1 Process connection: None or compression fitting
2 Extension leadwire transition with relief spring (400 °F)
3 Leadwire termination: Stripped leads or stripped leads with spade lugs
A Sheath diameter
A' Sheath diameter with reduced tip
B Wire length
s Wall thickness

Dimensions in in

Immersion length X		Wire length B	Sheath diameter A	Wall thickness S
TH11	TH12			
4, 6, 9, 12	6, 12, 18, 24	48, 72, 120	Ø1/8	0.014
			Ø3/16	0.022
			Ø1/4	0.029
Specified length: 2 to 96 in ½ in increments		Specified length: 12 to 300 in 12 in increments	Ø3/8, reduced Ø3/16	0.045

Weight

0.5 to 2.5 kg (1 to 5.5 lb)

Material

Process connections and sheath.

The temperatures for continuous operation specified in the following table are only intended as reference values for use of the various materials in air and without any significant compressive load. The maximum operation temperatures are reduced considerably in some cases where abnormal conditions such as high mechanical load occur or in aggressive media.

Material name	Short form	Recommended max. temperature for continuous use in air	Properties
AISI 316/1.4401	X2CrNiMo17-12-2	650 °C (1 200 °F)	▪ Austenitic, stainless steel ▪ High corrosion resistance in general ▪ Particularly high corrosion resistance in chlorine-based and acidic, non-oxidizing atmospheres through the addition of molybdenum (e.g. phosphoric and sulfuric acids, acetic and tartaric acids with a low concentration)

Process connection

Thread

Threaded process connection	Version	Thread length TL	Width across flats	Max. process pressure
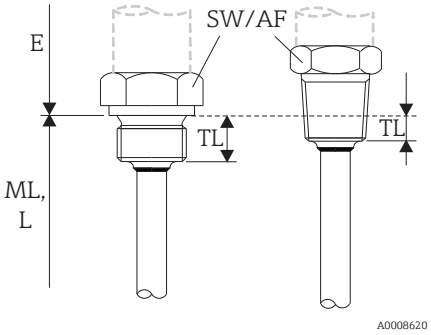 12 *Cylindrical (left side) and conical (right side) version*	G ½" DIN / BSP [1]	0.6 in	1.06 in	Maximum static process pressure for threaded process connection: [2] 400 bar (5 802 psi) at +400 °C (+752 °F)
	NPT ½"	0.32 in	0.87 in	

1) DIN ISO 228 BSPP
2) Maximum pressure specifications only for the thread. The failure of the thread is calculated, taking the static pressure into consideration. The calculation is based on a fully tightened thread (TL = thread length)

Compression fitting

All dimensions in inch

Re-adjustable compression fittings in stainless steel with FEP ferrule

Type of fitting	Tube size - Outer diameter (T) in inch	Process thread (PT) in inch	Length (L) in inch
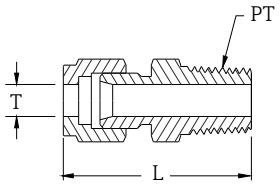	1/8	1/8" NPT	1 1/4
	3/16	1/8" NPT	1 1/4
	1/4	1/4" NPT	1 1/2
	3/8	1/4" NPT	1 1/2
	1/4	1/8" NPT	1 1/4
	1/8	1/4" NPT	1 1/2
	3/16	1/4" NPT	1 1/2
	1/4	1/2 NPT	1 3/4

One-time adjustable compression fittings in stainless steel with SS ferrule

Type of fitting	Tube size - Outer diameter (T) in inch	Process thread (PT) in inch	Length (L) in inch
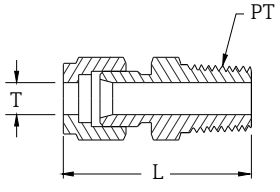	1/8	1/8" NPT	1 1/4
	3/16	1/8" NPT	1 1/4
	1/4	1/8" NPT	1 1/4
	1/8	1/4" NPT	1 1/2
	3/16	1/4" NPT	1 1/2
	1/4	1/4" NPT	1 1/2
	3/8	1/4" NPT	1 1/2
	1/4	1/2 NPT	1 3/4

Housing

Terminal heads

All terminal heads have an internal shape and size in accordance with DIN EN 50446, flat face and a thermometer connection with a ½" NPT thread. All dimensions in mm (in). Specifications without head transmitter installed. For ambient temperatures with head transmitter installed, see the 'Environment' section.

As a special feature, Endress+Hauser offers terminal heads with optimized terminal accessibility for easy installation and maintenance.

Some of the specifications listed below may not be available on this product line.

As illustrated in the following diagram, the length of the extension neck can influence the temperature in the terminal head. This temperature must remain within the limit values defined in the "Operating conditions" section.

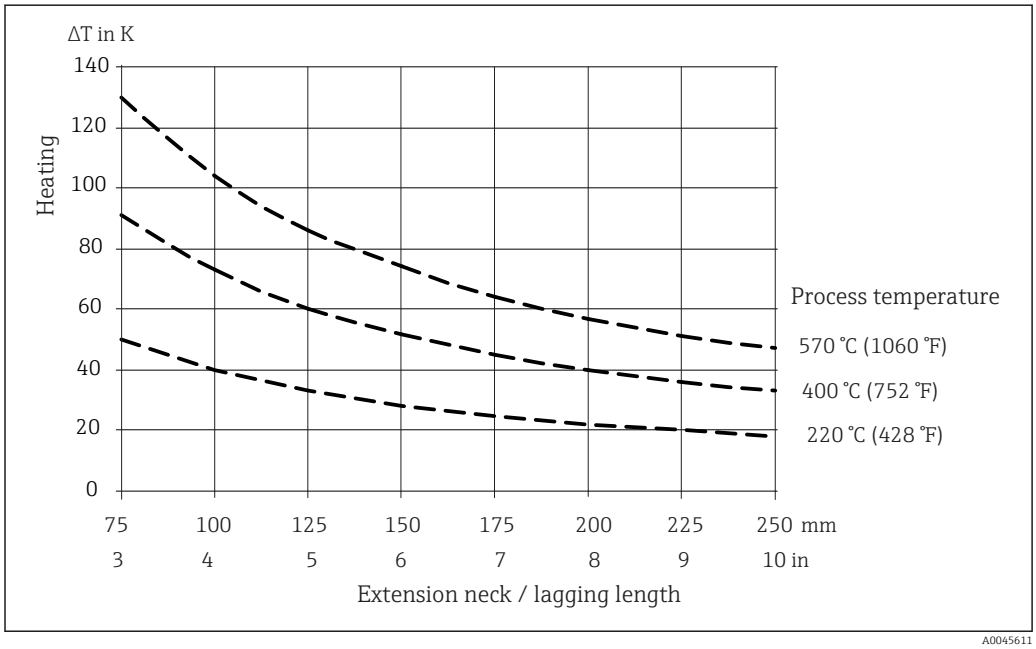

13 Heating of the terminal head as a function of the process temperature. Temperature in terminal head = ambient temperature 20 °C (68 °F)+ ΔT

The diagram can be used to calculate the transmitter temperature.

Example: At a process temperature of 220 °C (428 °F) and with a lagging length of 100 mm (3.94 in), the heat conduction is 40 K (72 °F). The transmitter temperature is therefore 40 K (72 °F) plus the ambient temperature, e.g. 25 °C (77 °F): 40 K (72 °F) + 25 °C (77 °F) = 65 °C (149 °F).

Result: The temperature of the transmitter is o.k., the length of the lagging is sufficient.

TA30H with display window in cover	Specification
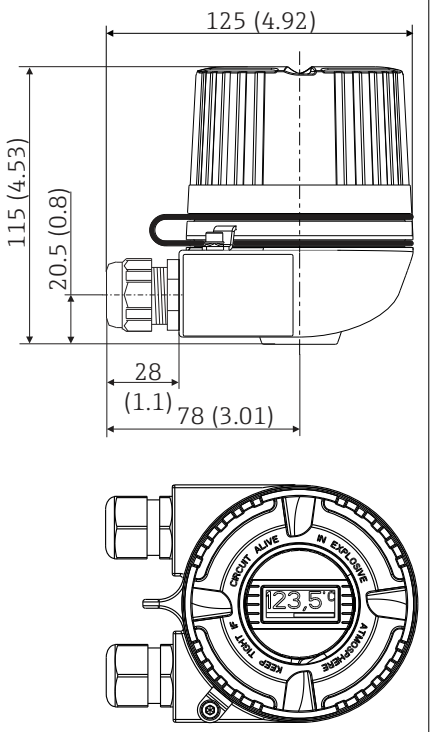	▪ Flameproof (XP) version, explosion-protected, captive screw cap, available with one or two cable entries ▪ Degree of protection: IP 66/68, NEMA Type 4x encl. Ex-version: IP 66/67 ▪ Temperature: −50 to +150 °C (−58 to +302 °F) for rubber seal without cable gland (observe max. permitted temperature of cable gland!) ▪ Material: ▪ Aluminum; polyester powder coated ▪ Stainless steel 316L without coating ▪ Klüber Syntheso Glep 1 dry-film lubricant ▪ Display window: single-pane safety glass according to DIN 8902 ▪ Thread: ½" NPT, ¾" NPT, M20x1.5, G½" ▪ Extension neck/thermowell connection: M20x1.5 or ½" NPT ▪ Color of aluminum head: blue, RAL 5012 ▪ Color of aluminum cap: gray, RAL 7035 ▪ Weight: ▪ Aluminum approx. 860 g (30.33 oz) ▪ Stainless steel approx. 2 900 g (102.3 oz) ▪ Head transmitter optionally available with TID10 display If the housing cover is unscrewed: Before tightening, clean the thread in the cover and housing base and lubricate if necessary (Recommended lubricant: Klüber Syntheso Glep 1)

TA30R (optionally with display window in cover)	Specification
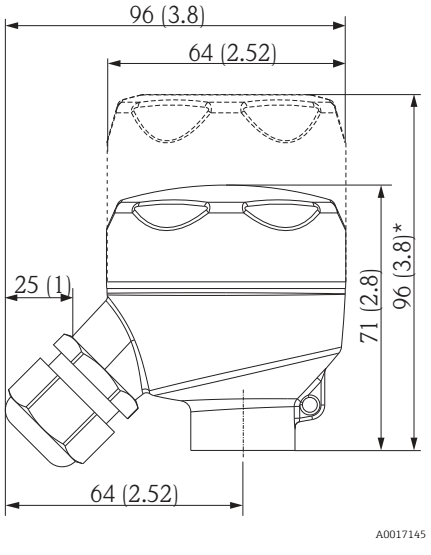 * Dimensions of version with display window in cover	▪ Degree of protection - standard version: IP69K (NEMA Type 4x encl.) Degree of protection - version with display window: IP66/68 (NEMA Type 4x encl.) ▪ Temperature: −50 to +130 °C (−58 to +266 °F) without cable gland ▪ Material: stainless steel 316L, abrasive-blasted or polished Seals: silicone, optional EPDM for applications free from paint-wetting impairment substances Display window: polycarbonate (PC) ▪ Cable entry thread ½" NPT and M20x1.5 ▪ Weight ▪ Standard version: 360 g (12.7 oz) ▪ Version with display window: 460 g (16.23 oz) ▪ Display window in cover optionally for head transmitter with display TID10 ▪ Protection armature connection: M24x1.5 or ½" NPT ▪ Ground terminal: internal as standard ▪ Available with 3-A marked sensors ▪ Not allowed for Class II and III applications

TU401	Specification
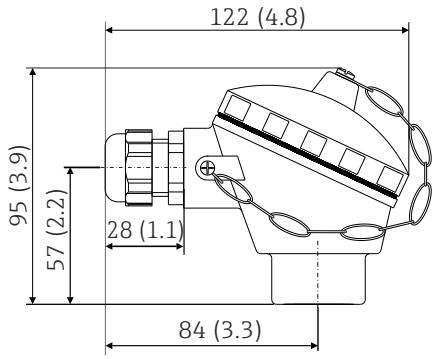	▪ Protection class: IP65 (NEMA Type 4x encl.) ▪ Temperature: −40 to 130 °C (−40 to 266 °F) silicone, up to 100 °C (212 °F) rubber seal without cable gland (observe max. permitted temperature of the cable gland!) ▪ Material: aluminum alloy with polyester or epoxy coating, rubber or silicone seal under the cover ▪ Cable entry: ½" NPT, ¾" NPT or plug 7/8" FF ▪ Protection armature connection: M24x1.5, G 1/2" or NPT 1/2" ▪ Head color: blue, RAL 5012 ▪ Cap color: gray, RAL 7035 ▪ Weight: 300 g (10.58 oz)

TU401 (TA30D style)	Specification
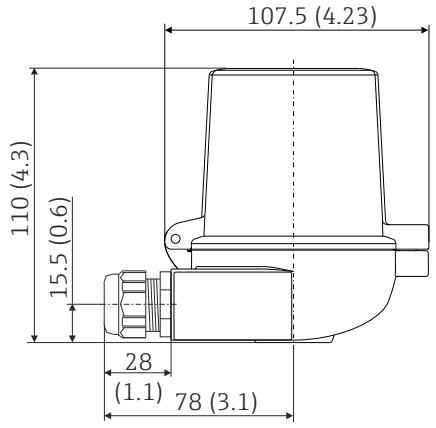	▪ Available with one or two cable entries ▪ Protection class: IP66/68 (NEMA Type 4x encl.) ▪ Temperature: −50 to +150 °C (−58 to +302 °F) without cable gland ▪ Material: aluminum, polyester powder coated Seals: silicone ▪ Threaded cable entry: G ½", ½" NPT and M20x1.5 ▪ Protection armature connection: M24x1.5 ▪ Two head transmitters can be mounted. In the standard version, one transmitter is mounted in the terminal head cover and an additional terminal block is installed directly on the insert. ▪ Head color: blue, RAL 5012 ▪ Cap color: gray, RAL 7035 ▪ Weight: 390 g (13.75 oz) ▪ Ground terminal, internal and external ▪ With 3-A symbol

TU401 (TA30S style)	Specification
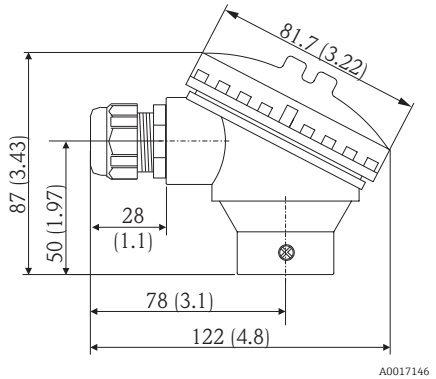	▪ Degree of protection: IP65 (NEMA Type 4x encl.) ▪ Temperature: −40 to +85 °C (−40 to +185 °F) without cable gland ▪ Material: polypropylene (PP), FDA-compliant, seals: O-ring EPDM ▪ Cable entry thread: ¾" NPT, ½" NPT) or or plug 7/8" FF ▪ Protective assembly connection: ½" NPT ▪ Color: white ▪ Weight: approx. 100 g (3.5 oz) ▪ Ground terminal: only internal via auxiliary terminal **⚠ CAUTION** **Potential electrostatic charging hazard** ▶ Not recommended for use in hazardous (classified) locations.

Field transmitters

Temperature field transmitter iTEMP TMT162	Specification
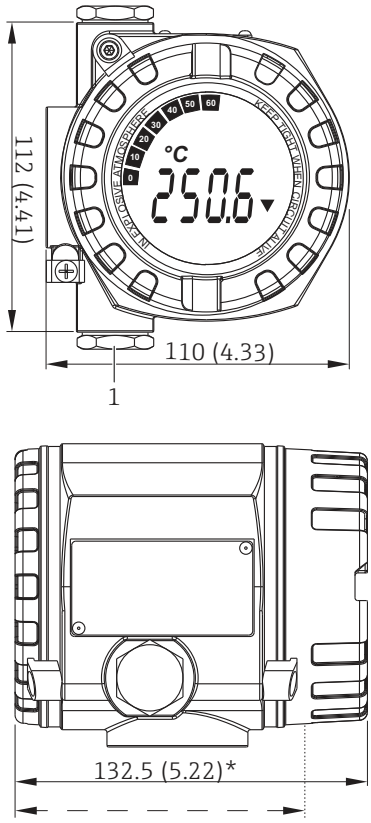 *1 Instrument connection for direct mounting assembly* * Dimensions without display = 112 mm (4.41 in)	▪ Separate electronics compartment and connection compartment ▪ Protection class: IP67, NEMA type 4x ▪ Material: Die-cast aluminum housing AlSi10Mg with powder coating on polyester base or stainless steel 316L ▪ Display rotatable in 90° increments ▪ Cable entry: 2x ½" NPT ▪ Brilliant backlit display with ease of visibility in bright sunshine or pitch darkness ▪ Gold plated terminals to avoid corrosion and additional measurement errors ▪ SIL certification as per IEC 61508:2010 (HART-protocol)

Temperature field transmitter iTEMP TMT142B	Specification
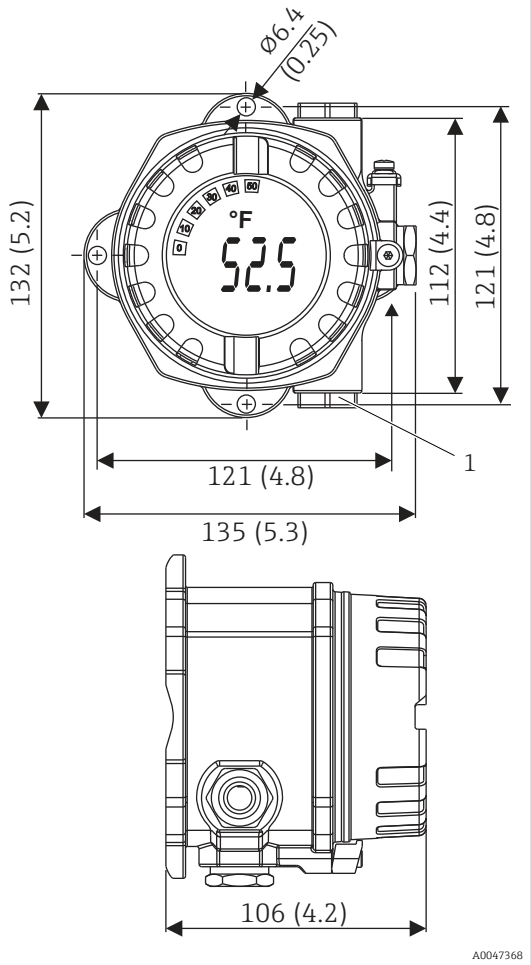 *1 Instrument connection for direct mounting assembly*	▪ Protection class: IP66/67, NEMA type 4x ▪ Material: Die-cast aluminum housing AlSi10Mg with powder coating on polyester base or stainless steel 316L ▪ Display rotatable in 90° increments ▪ Integrated Bluetooth® interface for wireless measured value display and parameter configuration, optional ▪ Brilliant backlit display with ease of visibility in bright sunshine or pitch darkness ▪ Gold plated terminals to avoid corrosion and additional measurement errors

Certificates and approvals

Current certificates and approvals for the product are available at www.endress.com on the relevant product page:

1. Select the product using the filters and search field.
2. Open the product page.
3. Select **Downloads**.

Ordering information

Detailed ordering information is available from your nearest sales organization www.addresses.endress.com or in the Product Configurator at www.endress.com:

1. Select the product using the filters and search field.
2. Open the product page.

3. Select **Configuration**.

Product Configurator - the tool for individual product configuration
- Up-to-the-minute configuration data
- Depending on the device: Direct input of measuring point-specific information such as measuring range or operating language
- Automatic verification of exclusion criteria
- Automatic creation of the order code and its breakdown in PDF or Excel output format
- Ability to order directly in the Endress+Hauser Online Shop

Accessories

The accessories currently available for the product can be selected at www.endress.com:

1. Select the product using the filters and search field.
2. Open the product page.
3. Select **Spare parts & Accessories**.

Device-specific accessories

TU301	Threaded compression fitting Order code: TU301
Mounting bracket	SS316L, for tube 1.5...3" Order code: 51007995
Adapter	M20x1.5 - ½" NPT cable entry Order code: 51004387
Cable gland	½" NPT, D4.5-8.5, IP 68 Order code: 51006845
Integrated overvoltage protection module	The module protects the electronics from overvoltage. Available for TMT162 housing.
Configuration kit TXU10	Configuration kit for PC-programmable transmitter with setup software and interface cable for PC with USB port Order code: TXU10-xx

Service-specific accessories

Applicator

Software for selecting and sizing Endress+Hauser measuring devices:
- Calculation of all the necessary data for identifying the optimum measuring device: e.g. pressure loss, accuracy or process connections.
- Graphic illustration of the calculation results

Administration, documentation and access to all project-related data and parameters over the entire life cycle of a project.

Applicator is available:
https://portal.endress.com/webapp/applicator

Configurator

Product Configurator - the tool for individual product configuration
- Up-to-the-minute configuration data
- Depending on the device: direct input of information specific to the measuring point, such as the measuring range or operating language
- Automatic verification of exclusion criteria
- Automatic creation of the order code and its breakdown in PDF or Excel output format
- Ability to order directly in the Endress+Hauser Online Shop

The Configurator is available at www.endress.com on the relevant product page:

1. Select the product using the filters and search field.
2. Open the product page.
3. Select **Configuration**.

FieldCare SFE500
FDT-based plant asset management tool
It can configure all smart field units in your system and helps you manage them. By using the status information, it is also a simple but effective way of checking their status and condition.

Technical Information TI00028S

DeviceCare SFE100
Configuration tool for HART, PROFIBUS and FOUNDATION Fieldbus field devices
DeviceCare is available for download at www.software-products.endress.com. You need to register in the Endress+Hauser software portal to download the application.

Technical Information TI01134S

Netilion
IIoT ecosystem: Unlock knowledge
With the Netilion IIoT ecosystem, Endress+Hauser enables you to optimize plant performance, digitize workflows, share knowledge, and enhance collaboration. Drawing on decades of experience in process automation, Endress+Hauser provides the process industry with an IIoT ecosystem that unlocks valuable insights from data. These insights allow process optimization, leading to increased plant availability, efficiency, and reliability - ultimately resulting in a more profitable plant.

www.netilion.endress.com

Documentation

The following types of documentation are available on the product pages and in the Download Area of the Endress+Hauser website (www.endress.com/downloads) (depending on the selected device version):

Document	Purpose and content of the document
Technical Information (TI)	**Planning aid for your device** The document contains all the technical data on the device and provides an overview of the accessories and other products that can be ordered for the device.
Brief Operating Instructions (KA)	**Guide that takes you quickly to the 1st measured value** The Brief Operating Instructions contain all the essential information from incoming acceptance to initial commissioning.
Operating Instructions (BA)	**Your reference document** These Operating Instructions contain all the information that is required in the various life cycle phases of the device: from product identification, incoming acceptance and storage, to mounting, connection, operation and commissioning, through to troubleshooting, maintenance and disposal.
Description of Device Parameters (GP)	**Reference for your parameters** The document provides a detailed explanation of each individual parameter. The description is aimed at those who work with the device over the entire life cycle and perform specific configurations.
Safety instructions (XA)	Safety Instructions (XA) are supplied with the device, depending on the approval. These are an integral part of the Operating Instructions. The nameplate indicates which Safety Instructions (XA) apply to the device.
Supplementary device-dependent documentation (SD/FY)	Always comply strictly with the instructions in the relevant supplementary documentation. The supplementary documentation is an integral part of the device documentation.



www.addresses.endress.com

Endress+Hauser

People for Process Automation