FLOWSIC100

Ultrasonic volume flow measurement for continuous emission monitoring

Forward-thinking emission monitoring

- Reliable flow measurement in small to very large duct diameters
- Long service life
- No purge air is required for gas temperatures up to 260 °C (500 °F)
- Minimal operational and maintenance costs
- Accurate measurement results even under difficult measurement conditions
- Measurements free of pressure loss and without influencing the process
- User-friendly operation via SOPAS ET software
- Extended diagnostics ensure reliable operational monitoring



Endress+Hauser
People for Process Automation

Forward-thinking emission monitoring from a single source

A decisive step on the way to a sustainable environment: Global warming and the consequences of the greenhouse effect make it necessary to act. All over the world, industries and regions that produce emissions are being encouraged to reduce or ideally eliminate their production of hazardous substances and pollution.

The focus here is primarily on areas with intensive energy consumption and large urban industrial centers. They are all united by a common goal: to support effective climate protection and to maintain and restore a clean environment.



Complete solutions for emission monitoring

Tailored to your requirements: In addition to gas flowmeters, we offer in-situ and extractive gas analysis solutions (hot/wet extractive or cold/dry extractive) for a variety of applications.



Flow measurement

To accurately calculate the emissions, it is important to know the flow rate of the emitted gas. By accurately measuring the flow rate, emission levels can be accurately determined, which helps comply with environmental regulations and ensures a minimal impact on the air quality.



In-situ gas analysis

We offer a broad range of gas analyzers based on a variety of powerful measurement principles. Thanks to our innovative in-situ measurement technology, the measuring devices can be installed in the duct through which the gas flows and directly at the measurement location.



Extractive gas analysis

In extractive gas analysis, a partial gas flow is removed from the gas-conducting duct conditioned, and then fed to the analyzer module under constant conditions. This flexibility enables aggressive, flammable or poisonous gases to be measured – even under difficult process conditions such as high temperatures, pressures or dust loads.



Dust measurement

We offer rugged and low-maintenance measuring devices for detecting and monitoring dust concentrations. All dust measuring devices are easy to integrate into existing applications – and offer straightforward installation and commissioning along with user-friendly operation.

Volume flow measurement with FLOWSIC100

You can't improve what you can't measure:

Flow measurement plays a crucial role in continuous emissions monitoring, where accurate monitoring and testing of pollutant emissions is essential for environmental compliance.

Areas of application

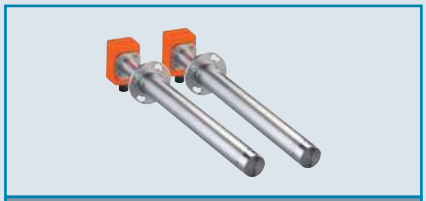

FLOWSIC100



Power generation



Metal and steel industry



Cement industry



Natural gas industry



Pulp and paper industry



Waste incineration



Chemicals, petrochemicals, refineries



Maritime

Leading ultrasonic technology for emission measurement

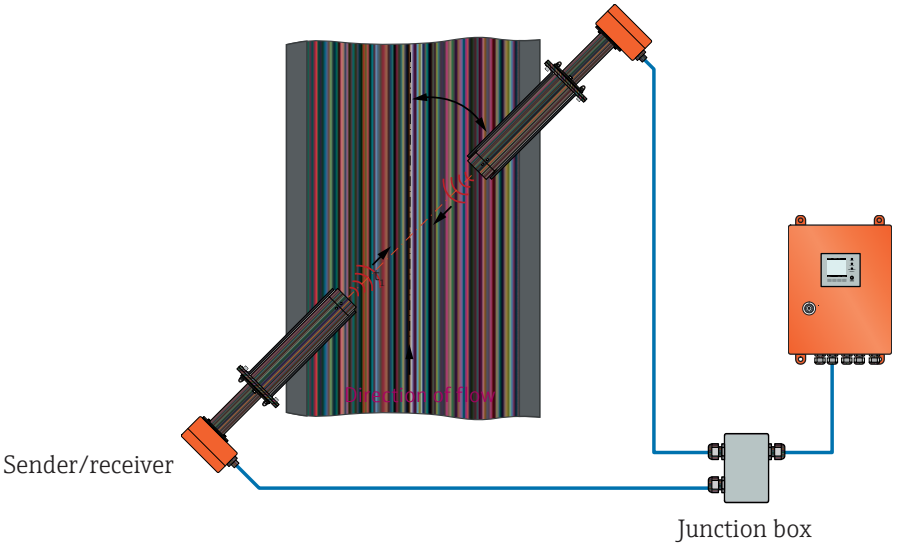

Excellence in ultrasound

The FLOWSIC100 uses advanced ultrasonic technology to measure gas flows with exceptional precision. This ensures accurate measurements, even under challenging conditions.

Reliable performance

The rugged construction and resistance to harsh ambient conditions make FLOWSIC100 a reliable choice for long-term operation. The ultrasonic transducers are manufactured from highly-resistant titanium in the standard version. For particularly aggressive gas compositions, highly-resistant alloys (e.g. Hastelloy) are used to ensure durability. As part of the functional assessment for use in emission measurements, the FLOWSIC100 achieved a maintenance interval of six months.

Wide measuring range

Thanks to its wide measuring range, the FLOWSIC100 is designed for a variety of gas flow conditions and delivers accurate results for a wide range of applications from high temperatures to extreme dust loads.

Fully-automatic self-monitoring

The device periodically validates its functions using the check cycle integrated in the FLOWSIC100, while the integrated self-diagnosis continuously monitors all important function parameters. In the event of impermissible deviations that could affect the measurement result, warning messages are generated. This allows maintenance work to be planned in good time and component wear to be detected early on. It also allows functional impairment or failure of the device to be prevented.



Tailored to your specific requirements: Product overview

Measurements without purge air – plug and play up to 260 °C (500 °F)

Thanks to the use of ultra-modern ultrasonic transducers, the FLOWSIC100 operates in the temperature range from −40°C to +260°C (−40 °F to 500 °F) completely without purge air and thus covers the majority of emission measurements.

Installation and operation of the measuring system are particularly cost-efficient. Measuring without purge air avoids the temperature falling below the dew point at the measurement sensor and reduces the risk of corrosion. This saves on maintenance and repair costs.



FLOWSIC100 H

- High sound power – ideal for large stacks with diameters from 3 to 13 m (118" to 512")
- Also suitable for applications with high levels of dust



FLOWSIC100 M

- Medium sound power – ideal for small stacks with diameters up to 3.5 m (138")



FLOWSIC100 PR

- Ideal for single-sided installation with stack diameters of 1 m (39") and greater

Devices with innovative cooling for emission measurements in high-temperature applications up to 450 °C (840 °F)

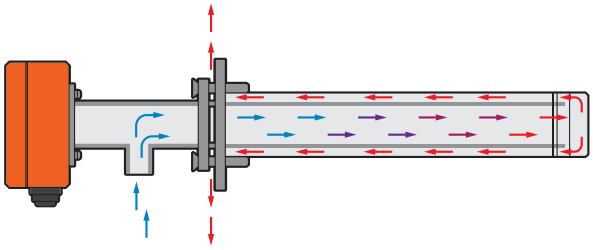

Internally cooled sensors

Specially developed ultrasonic transducers with integrated air cooling are used in the internally cooled FLOWSIC100 M-AC and H-AC sensor types. A blower unit supplies cooling air. The air is directed to the outside. Penetration of cooling air into the measuring medium is excluded.

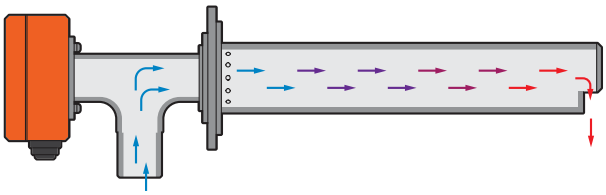

Purged sensors

The FLOWSIC100 PM / PH and PH-S sensor types are primarily used in applications with moist, wet dust. A purge air unit supplies a permanent air flow which is guided over the surface of the ultrasonic transducer, thereby keeping it free of contamination.

Smart connectivity

To keep pace with the digital age, the FLOWSIC100 offers seamless integration using modern communication protocols. It supports remote control, diagnostics, and data analysis, which provides users with real-time insights. Stay connected and make data-driven decisions for greater efficiency and productivity.

Modular, extensible I/O concept:

- Analog and digital inputs and outputs
- Modbus RS485
- Modbus TCP
- Ethernet
- PROFIBUS DP



LC display with status LED and operating buttons (option)

- Visualization of measured values
- Diagnostic information
- Configuration

The MCU (control unit) is used to input and output signals and makes it easy to connect the FLOWSIC100 to higher-level distributed control systems. Different interfaces are available for this which can be optionally expanded if necessary. The measured volume flow can be calculated to standard conditions.

For this purpose, measured values can be read in from external pressure and temperature sensors or fixed values for pressure and temperature parameterized in the MCU. In the internally cooled device versions FLOWSIC100 M-AC and FLOWSIC100 H-AC, the MCU control unit is equipped with an integrated blower unit and provides the required cooling air for the ultrasonic sensors. In addition, a display unit permits especially convenient operation of the FLOWSIC100.

Functional assessment and approvals

The FLOWSIC100 is a suitability-tested measuring system for continuous emission measurement and meets the requirements of the following standards:

- EN 15267-1, 15267-2, 15267-3
- EN 14181
- EN ISO 16911-2

The device is approved for use in plants requiring a permit according to the 2001/80/EC (13th BImSchV), 2000/76/EC (17th BImSchV) and 30th BImSchV (German Federal Immission Control Act), the TA Luft (German Technical Instructions on Air Quality Control), and the 27th BImSchV. The maintenance interval for the FLOWSIC100 is 6 months. The measuring system is also certified in accordance with “MCERTS: Performance Standards for Continuous Emission Monitoring Systems” and meets the requirements of

Flow measurement for process control

Tailor-made for your needs: For environments that do not comply with the EN15267 standard, for example process control, a transmitter version is available that is reliable and rugged and does not require recalibration.

The sensors are connected directly to an existing distributed control system. This product configuration does not require an MCU (control unit), and no pressure or temperature transmitters are needed.

Specifications	FLOWSIC100 Transmitter	FLOWSIC100
	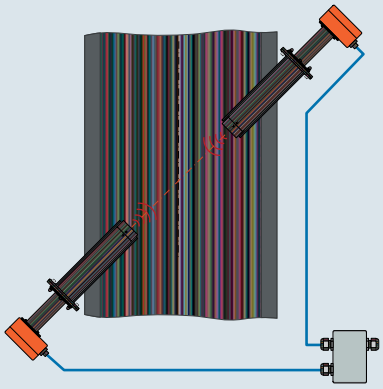	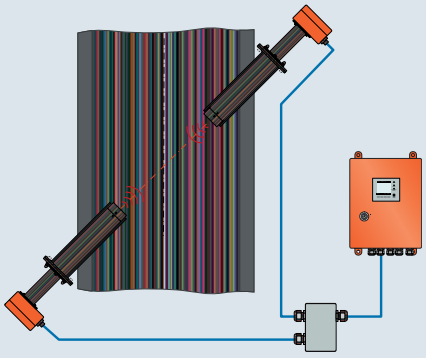
Standard scope of delivery	Sensors incl. connection cable	Sensors incl. connection cable
	–	MCU control unit
Sensor type	Standard	Standard Internally cooled Purged
Temperature range	Up to 260 °C (500 °F)	Up to 450 °C (840 °F)
I/O	Modbus® RTU	Modbus® RTU/TCP analog incl. HART digital / frequency Profibus
Display	No	Yes
Voltage supply	24 V DC	24 V DC 90 V ... 250 V DC
Certification according to EN15267/QAL1	No	Yes
Advantages	Lean measurement solution for basic requirements	Extended functionality and EN 15267 / QAL1 certification

SOPAS ET configuration software

The SOPAS ET software is a standard user interface for numerous of our devices from the field of emission measurement (e.g. for volume flow measurement, dust measurement, gas analysis). SOPAS ET allows comprehensive support for all technologies implemented in the devices, irrespective of whether the devices are already installed or new.

SOPAS ET offers:

- quick and easy connection setup to the device
- parameterization, configuration and diagnostics for the FLOWSIC100
- download and upload of configuration files and parameter sets
- simple project and device handling
- communication via various fieldbuses
- firmware update



FLOWSIC100
Volume flow measuring devices for continuous emission monitoring



Product Description

The FLOWSIC100 product family was developed for emission monitoring. The “H” versions are suitable for large duct diameters and applications with high dust levels, while the “M” versions are ideal for medium duct diameters. With the probe version “PR”, the two ultrasonic transducers are mounted on one sender/receiver unit (measuring probe) with a fixed measuring distance. The “-AC” device versions feature innovative internal cooling for use at gas temperatures up to 450 °C (840 °F). The purged “Px” device versions are used in gases with a high content of sticky or wet dust. Rugged titanium transducers are used in the standard version and are suitable for difficult application conditions. The measuring system consists of two sender/receiver units or one measuring probe and the MCU control unit. The MCU is used for signal input and output, calculation with reference conditions (standardization), as well as for user-friendly operation via LC display.

At a glance

- Rugged titanium transducers for long service life
- Corrosion-resistant material for use with aggressive gases (option)
- Integral measurement across the duct diameter for versions H, M, and S
- Probe version PR for cost-saving, single-sided installation on duct
- Automatic operational check with zero and reference point test

Your benefits

- Reliable flow measurement in small to very large duct diameters
- Long service life
- No purge air is required for gas temperatures up to 260 °C (500 °F)
- Minimal operational and maintenance costs
- Accurate measurement results even under difficult measurement conditions
- Measurements free of pressure loss and without influencing the process
- User-friendly operation via SOPAS ET software
- Extended diagnostics ensure reliable operational monitoring

Fields of application

- Continuous emission measurement in energy generation
- Emission monitoring in waste incineration plants
- Emission measurement in processing industry (cement, iron and steel, glass)
- Emission monitoring in the chemical and petrochemical industry
- Emission monitoring in the paper and textile industry
- Flow measurements and process control, e.g. in heating and ventilation systems

CE EN 15267 EN 14181

More Information online

For more information, enter the link or scan the QR code to get direct access to technical data, operating instructions, software, application examples, and much more.
www.endress.com/flowsic100

Technical data

The precise device specifications and product performance data may vary and are dependent on the respective application and customer specifications.

FLOWSIC100

Measured values	Volume flow in actual conditions, volume flow in standard conditions, gas velocity, speed of sound, gas temperature
Suitability-tested measurands	Gas velocity
Measurement principle	Ultrasonic transit time difference measurement
Measuring ranges	
Gas velocity	0 ... ± 40 m/s (0 ... ± 131 ft/s)
Certified measuring ranges	
Gas velocity	0 ... 20 m/s / 0 ... 40 m/s (0 ... 65.6 ft/s / 0 ... 131 ft/s)
Repeatability	For v < 2 m/s (< 6.6 ft/s): ± 0.02 m/s (0.66 ft/s) For v > 2 m/s (> 6.6 ft/s): ± 1%
Accuracy	± 0.1 m/s (± 0.3 ft/s); depending on application
Diagnostic functions	Automatic check cycle for zero and reference point. Extended device diagnosis with SOPAS ET software.
Storage temperature	–40 °C ... +70 °C (–40 °F ... 158 °F)
Conformities (only with MCU)	2001/80 / EC (13th BImSchV; German Federal Immission Control Act) 2000/76 / EG (17th BImSchV; German Federal Immission Control Act) 27th BImSchV (German Federal Immission Control Act) 30th BImSchV (German Federal Immission Control Act) TA-Luft (German Technical Instructions on Air Quality Control) EN 15267 EN 14181 EN 16911-2 MCERTS GOST
Electrical safety	CE

FLOWSIC100 M version

Gas temperature	–40 °C ... +260 °C (–40 °F ... 500 °F)
Operating pressure	–100 hPa ... 100 hPa (– 1.5 psi ... 1.5 psi)
Ambient temperature	–40 °C ... +60 °C (–40 °F ... 140 °F)
Nominal pipe size	0.15 m ... 3.4 m (6" ... 134")
Dust load	≤ 1 g/m³; depending on measuring distance and gas temperature
Mounting	Installation angle 45° ... 60°
Electrical connection	
Power consumption	≤ 40 W
System components	2 x FLSE100-M sender/receiver unit 1 x MCU-N control unit 1 x connection unit 2 x connection cable 2 x flange with tube Enclosure rating IP65 (electronics housing)

FLOWSIC100 H version

Gas temperature	–40 °C ... +260 °C (–40 °F ... 500 °F)
Operating pressure	–100 hPa ... 100 hPa (– 1.5 psi ... 1.5 psi)
Ambient temperature	–40 °C ... +60 °C (–40 °F ... 140 °F)
Nominal pipe size	1.4 m ... 13 m (55" ... 512")
Dust load	≤ 100 g/m³; depending on measuring distance and gas temperature; for dry, non-sticky dust
Mounting	Installation angle 45° ... 60°
Electrical connection	
Power consumption	≤ 40 W
System components	2 x FLSE100-H sender/receiver unit 1 x MCU-N control unit 1 x connection unit 2 x connection cable 2 x flange with tube Enclosure rating IP65 (electronics housing)

FLOWSIC100 PR version

Gas temperature	–40 °C ... +260 °C (–40 °F ... 500 °F)
Operating pressure	–100 hPa ... 100 hPa (– 1.5 psi ... 1.5 psi)
Ambient temperature	–40 °C ... +60 °C (–40 °F ... 140 °F)
Nominal pipe size	≥ 0.4 m (16")
Dust load	≤ 1 g/m³; depending on measuring distance and gas temperature
Mounting	Installation angle 45°
Electrical connection	
Power consumption	≤ 40 W
System components	1 x FLSE100-PR sender/receiver unit 1 x MCU-N control unit 1 x connection cable 1 x flange with pipe Enclosure rating IP65 (electronics housing)

FLOWSIC100 S version

Gas temperature	–40 °C ... +150 °C (–40 °F ... +300 °F) –40 °C ... 260 °C (–40 °F ... 500 °F) on request
Operating pressure	–100 hPa ... 100 hPa (– 1.5 psi ... 1.5 psi)
Ambient temperature	–40 °C ... +60 °C (–40 °F ... 140 °F)
Nominal pipe size	0.15 m ... 3.4 m (6" ... 134")
Dust load	≤ 1 g/m³; depending on measuring distance and gas temperature
Mounting	Installation angle 45° ... 60°
Electrical connection	
Power consumption	≤ 40 W
System components	2 x FLSE100-S sender/receiver unit 1 x MCU-N control unit 2 x connection cable 2 x flange with tube Enclosure rating IP65 (electronics housing)

FLOWSIC100 M-AC version

Gas temperature	–40 °C ... +450 °C (–40 °F ... 840 °F)
Operating pressure	–100 hPa ... 100 hPa (– 1.5 psi ... 1.5 psi)
Ambient temperature	–40 °C ... +60 °C (–40 °F ... 140 °F)
Nominal pipe size	0.15 m ... 3.4 m (6" ... 134")
Dust load	≤ 1 g/m³, depending on measuring distance and gas temperature
Mounting	Installation angle 45° ... 60°
Electrical connection	
Power consumption	≤ 75 W
System components	2 x FLSE100-MAC sender/receiver unit 1 x MCU-P control unit 1 x connection unit 2 x connection cable 2 x purge air hose 2 x flange with tube Enclosure rating IP65 (electronics housing)

FLOWSIC100 H-AC version

Gas temperature	–40 °C ... +450 °C (–40 °F ... 840 °F)
Operating pressure	–100 hPa ... 100 hPa
Ambient temperature	–40 °C ... +60 °C (–40 °F ... 140 °F)
Nominal pipe size	1.4 m ... 11.3 m (55" ... 445")
Dust load	≤ 100 g/m³; depending on measuring distance and gas temperature; for dry, non-sticky dust
Mounting	Installation angle 45° ... 60°
Electrical connection	
Power consumption	≤ 75 W
System components	2 x FLSE100-HAC sender/receiver unit 1 x MCU-P control unit 1 x connection unit 2 x connection cable 2 x purge air hose 2 x flange with tube Enclosure rating IP65 (electronics housing)

FLOWSIC100 PM version

Gas temperature	–40 °C ... +450 °C (–40 °F ... 840 °F)
Operating pressure	–100 hPa ... 100 hPa
Ambient temperature	–40 °C ... +60 °C (–40 °F ... 140 °F)
Nominal pipe size	0.35 m ... 2.5 m (14" ... 98")
Dust load	≤ 1 g/m³; depending on measuring distance and gas temperature
Mounting	Installation angle 45° ... 60°
Electrical connection	
Power consumption	≤ 40 W
System components	2 x FLSE100-PM sender/receiver unit 1 x MCU-N control unit 1 x connection unit 2 x connection cable 2 x flange with tube 2 x purge air hose 1 x purge air unit Enclosure rating IP65 (electronics housing)

FLOWSIC100 PH version

Gas temperature	–40 °C ... +450 °C (–40 °F ... 840 °F)
Operating pressure	–100 hPa ... 100 hPa
Ambient temperature	–40 °C ... +60 °C (–40 °F ... 140 °F)
Nominal pipe size	0.7 m ... 8.7 m (28" ... 343")
Dust load	≤ 100 g/m³; depending on measuring distance and gas temperature
Mounting	Installation angle 45° ... 60°
Electrical connection	
Power consumption	≤ 40 W
System components	2 x FLSE100-PH sender/receiver unit 1 x MCU-N control unit 1 x connection unit 2 x connection cable 2 x flange with tube 2 x purge air hose 1 x purge air unit Enclosure rating IP65 (electronics housing)

FLOWSIC100 PH-S version

Gas temperature	–40 °C ... +450 °C (–40 °F ... 840 °F)
Operating pressure	–100 hPa ... 100 hPa
Ambient temperature	–40 °C ... +60 °C (–40 °F ... 140 °F)
Nominal pipe size	1.4 m ... 11.3 m (55" ... 445")
Dust load	≤ 100 g/m³; depending on measuring distance and gas temperature
Mounting	Installation angle 45° ... 60°
Electrical connection	
Power consumption	≤ 40 W
System components	2 x FLSE100-PHS sender/receiver unit 1 x MCU-N control unit 1 x connection unit 2 x connection cable 2 x flange with tube 2 x purge air hose 1 x purge air unit Enclosure rating IP65 (electronics housing)

MCU-N control unit

Description	Obligatory control and evaluation unit for volume flow measuring devices without internal cooling
Ambient temperature	–40 °C ... +60 °C (–40 °F ... 140 °F)
Enclosure rating	IP65
Analog outputs	1 output: 0/2/4 ... 20 mA, 750 Ω Galvanically isolated; up to five outputs with use of additional modules (option)
Analog inputs	2 inputs: 0 ... 20 mA Up to four inputs with use of additional modules (option)
Digital outputs	5 relay outputs (changeover contacts), volt-free: 48 V, 1 A Safety extra-low voltage; for status signals “Operation/Fault”, “Limit value”, “Warning”, “Maintenance” and “Control cycle”
Digital inputs	4 volt-free contacts
Interfaces	USB 1.1 (virtual COM port; service interface) RS-232 (via terminal connection; service interface) RS-485 (for connection of sender/receiver unit(s))
Bus protocol	Ethernet TCP/IP (via optional interface module) Modbus (via optional interface module) Modbus TCP (via optional interface module) PROFIBUS DP (via optional interface module)
Display	LC display (option) Status LEDs: “Power”, “Maintenance”, and “Fault”
Operation	Via LC display (option) or SOPAS ET software
Dimensions (W x H x D)	210 mm x 340 mm x 120 mm (8.27" x 13.39" x 4.72")
Weight	3.7 kg (8.16 lbs)
Electrical connection	
Voltage	90 ... 250 V Type with 24 V DC optionally available
Frequency	47 Hz ... 63 Hz
Power consumption	≤ 15 W
Options	Interface module(s) I/O module(s) LC display 19" type

MCU-P control unit

Description	Obligatory control and evaluation unit with integrated cooling air unit, for volume flow measuring devices with internal cooling
Ambient temperature	–40 °C ... +45 °C (–40 °F ... 113 °F) Intake temperature for the purge air
Enclosure rating	IP 54
Analog outputs	1 output: 0/2/4 ... 20 mA, 750 Ω Galvanically isolated; up to five outputs with use of additional modules (option)
Analog inputs	2 inputs: 0 ... 20 mA Not galvanically isolated; additional inputs with use of I/O modules (option)

Digital outputs	5 relay outputs (changeover contacts), volt-free: 48 V, 1 A Safety extra-low voltage; for status signals “Operation/Fault”, “Limit value”, “Warning”, “Maintenance” and “Control cycle”
Digital inputs	4 volt-free contacts
Interfaces	USB 1.1 (virtual COM port; service interface) RS-232 (via terminal connection; service interface) RS-485 (for connection of sender/receiver unit(s))
Bus protocol	Ethernet TCP/IP (via optional interface module) Modbus (via optional interface module) Modbus TCP (via optional interface module) PROFIBUS DP (via optional interface module)
Display	LC display (option) Status LEDs: “Power”, “Maintenance”, and “Fault”
Operation	Via LC display (option) or SOPAS ET software
Dimensions (W x H x D)	300 mm x 455 mm x 220 mm (11.8" x 17.9" x 8.7")
Weight	13.5 kg (30 lbs)
Electrical connection	
Voltage	90 ... 250 V Type with 24 V DC optionally available
Frequency	47 ... 63 Hz
Power consumption	≤ 70 W
Auxiliary connections	Purge air
Options	Interface module(s) I/O module(s) LC display 19" type

Purge air unit SLV4-2, 2BH1300, 3-ph

Description	Obligatory purge air unit for purged volume flow measuring devices
Purge air quantity	≥ 48 m^3/h
Diagnostic functions	Low-pressure monitor
Ambient temperature	–20 °C ... +55 °C (-4 °F ... 131 °F)
Enclosure rating	IP 54
Dimensions (W x H x D)	550 mm x 550 mm x 258 mm (21.7" x 21.7" x 10.2") (See dimensional drawings for details)
Weight	18 kg (40 lbs)
Auxiliary connections	Purge air: 40 mm (1.6")
Integrated components	Two-stage air filter, type Europiclon, dust capacity 200 g (0.44 lbs)

Order information

Our regional sales organization will be glad to advise you on which device configuration is best for you.

Dimensional drawings

FLSE100-M sender/receiver unit (dimensions in mm (inch))

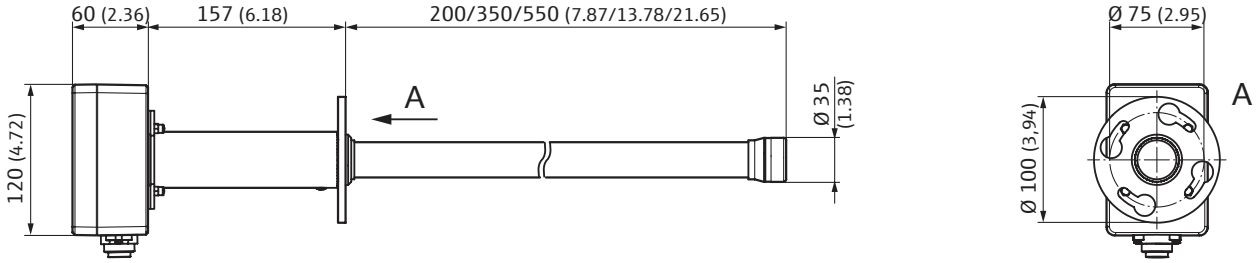

FLSE100-H sender/receiver unit (dimensions in mm (inch))

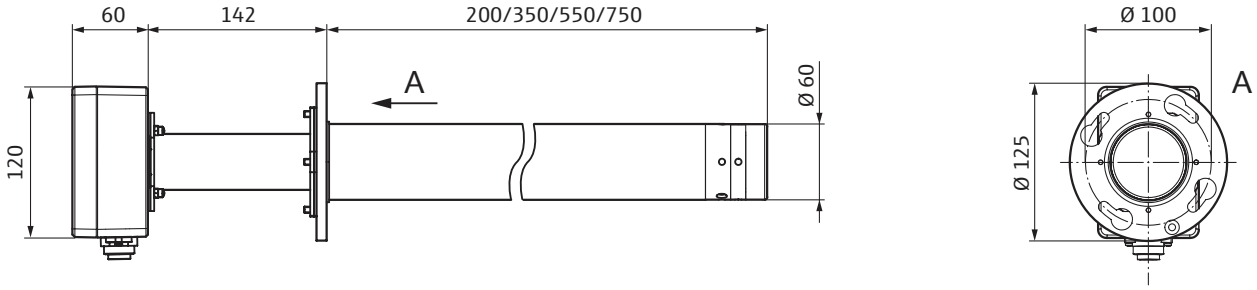

FLSE100-PR sender/receiver unit (dimensions in mm (inch))

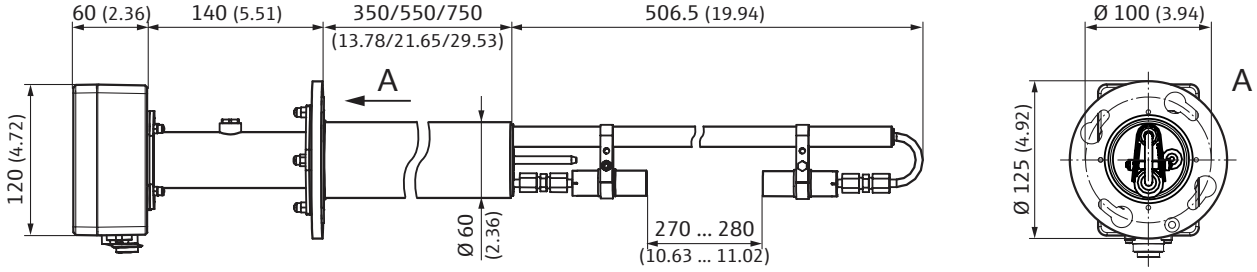

FLSE100-SA sender/receiver unit (dimensions in mm (inch))

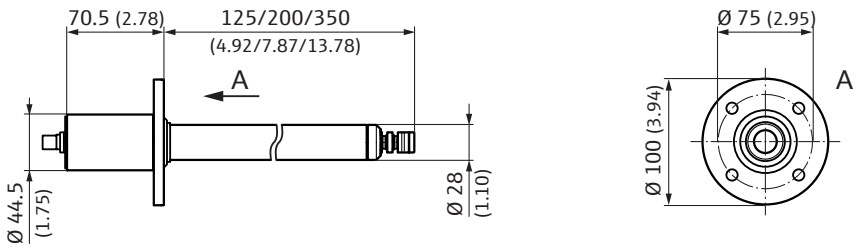

FLSE100-SD sender/receiver unit (dimensions in mm (inch))

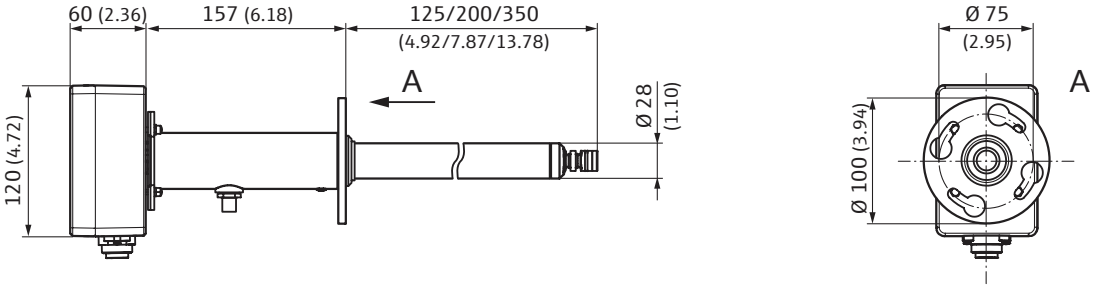

FLSE100-MAC sender/receiver unit (dimensions in mm (inch))

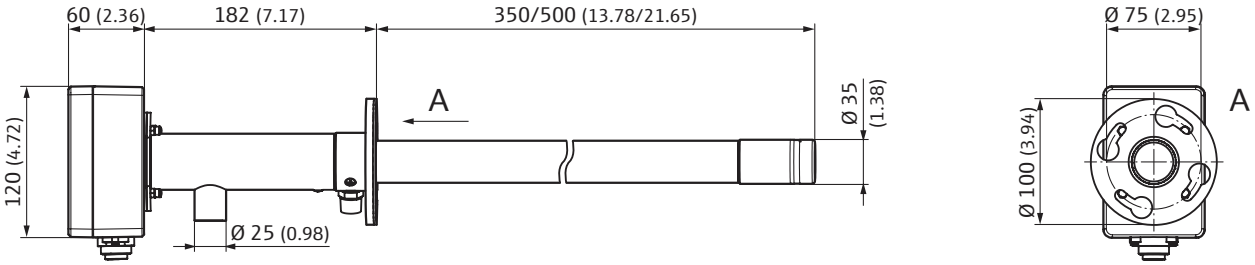

FLSE100-HAC sender/receiver unit (dimensions in mm (inch))

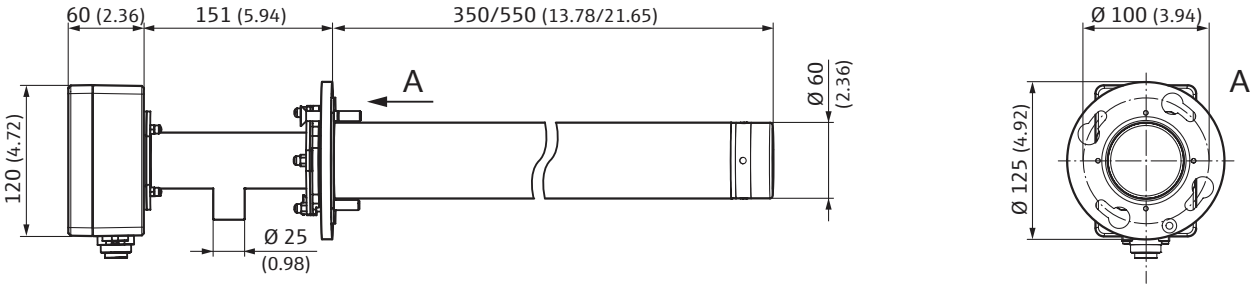

FLSE100-PM and FLSE100-PH sender/receiver units (dimensions in mm (inch))

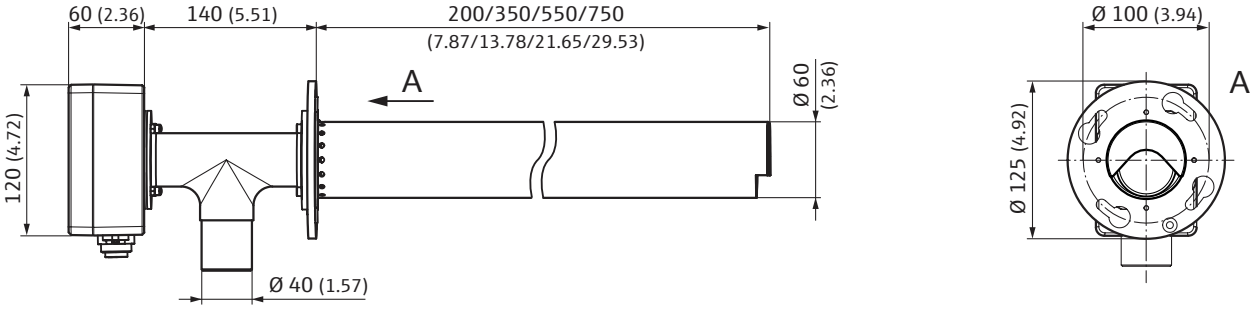

FLSE100-PHS sender/receiver unit (dimensions in mm (inch))

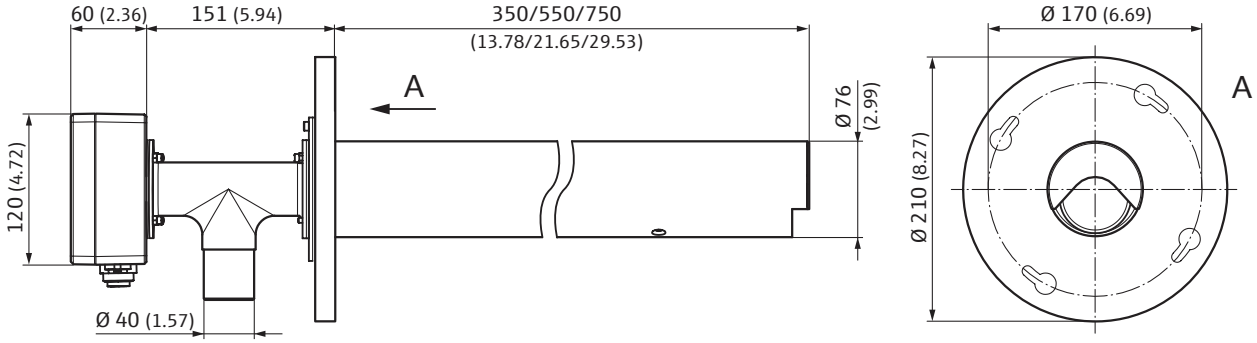

MCU-N control unit; wall housing, compact type (for non-hazardous areas only) (dimensions in mm (inch))

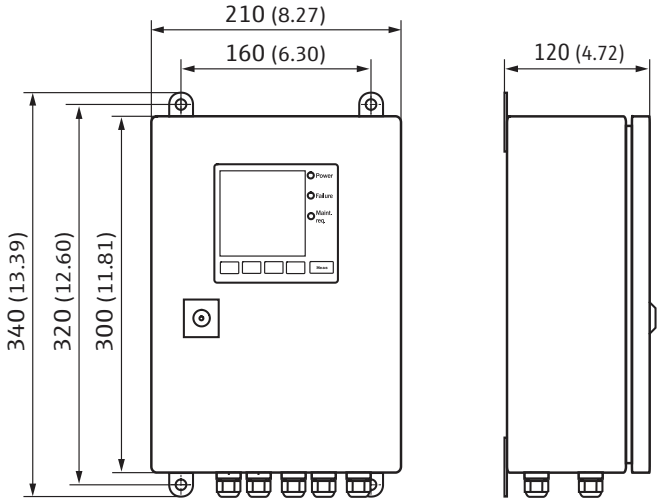

MCU-P control unit; wall housing, compact type (for non-hazardous areas only) (dimensions in mm (inch))

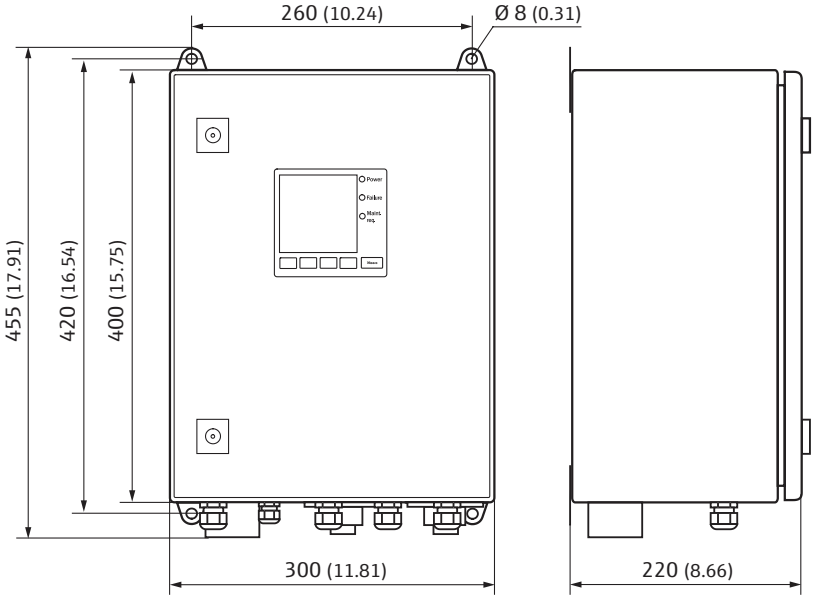

SLV4-2 purge air unit, 2BH1300 (dimensions in mm (inch))

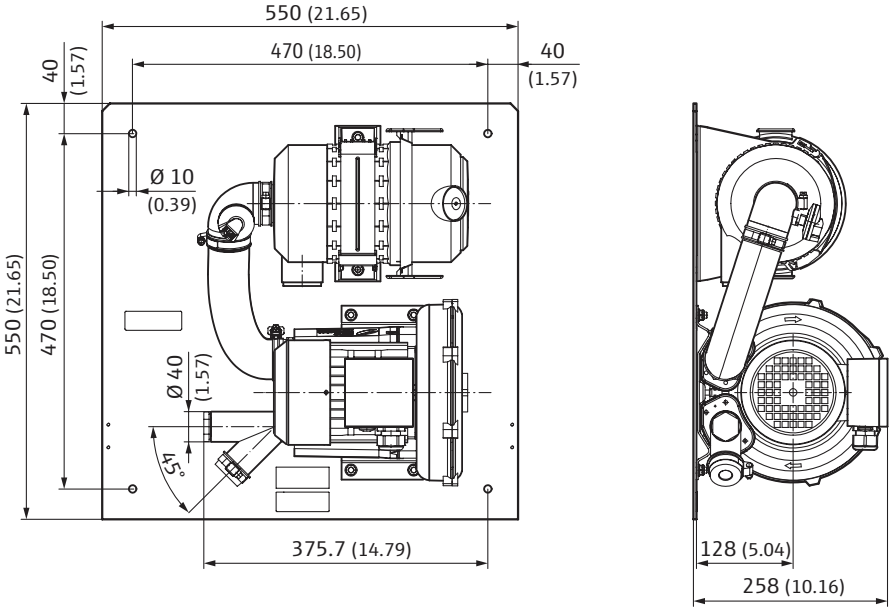

Flange plate with tube

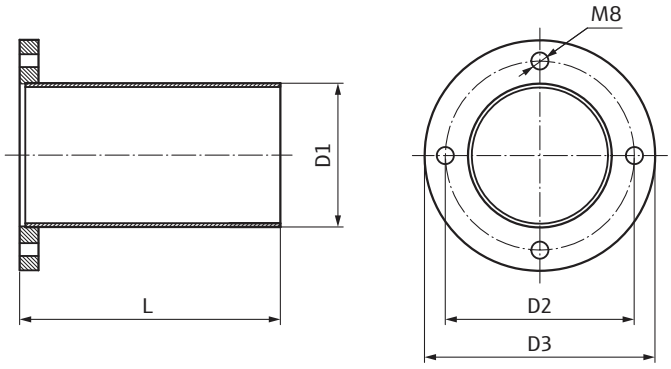

D1	D2	D3	L	Type FLSE100
48.3	75	100	113	SA, SD
			188, 338	SA, SD, M
			338, 538	M, MAC
76.1	100	122	188	H, PM, PH
			338	H, HAC, PR, PM, PH
			538	H, HAC, PR, PM, PH
			738	H, PR, PM, PH
114.3	170	210	338, 538, 738	PHS

All dimensions in mm

D1	D2	D3	L	Type FLSE100
1.9	2.95	3.94	4.45	SA, SD
			7.40, 13.31	SA, SD, M
			13.31, 21.18	M, MAC
3.0	3.94	4.80	7.40	H, PM, PH
			13.31	H, HAC, PR, PM, PH
			21.18	H, HAC, PR, PM, PH
			29.05	H, PR, PM, PH
4.5	6.69	8.27	13.31, 21.18, 29.05	PHS

All dimensions in in

www.addresses.endress.com

Eco-friendly produced and printed on paper
from sustainable forestry.

IN 8030087 / EHS / EN / 03.01

Endress+Hauser

People for Process Automation