TI01349T/09/EN/06.25-00
71718776
2025-08-31

Technical Information
iTHERM ModuLine TM402 Hygienic modular thermometer

Imperial, direct-contact RTD basic thermometer for hygienic applications



Applications

- Specially designed for use in hygienic and aseptic applications in the Food & Beverages and Life Sciences industries
- Measuring range: −50 to +200 °C (−58 to +392 °F)
- Pressure range up to 40 bar (580 psi)
- Protection class: up to IP69K
- Can be used in non-hazardous areas

Your benefits

- Excellent price-performance ratio and fast delivery time
- User-friendly and reliable from product selection to maintenance
- International certification: hygiene standards as per 3-A®, EHEDG, ASME BPE, FDA, TSE Certificate of Suitability
- Wide range of process connections
- Meets PMO requirements as a recording thermometer by US FDA for dairies

Endress+Hauser
People for Process Automation

Table of contents

Function and system design 3
Notes on selecting the right device 3
Measuring principle 3
Measuring system 4

Input 5
Measured variable 5
Measuring range 5

Output 5
Output signal 5
Family of temperature transmitters 5

Wiring 6
Wiring diagrams 6
Cable entries 7
Connectors 7
Overvoltage protection 8

Performance characteristics 8
Reference operating conditions 8
Maximum measured error 9
Ambient temperature effect 9
Self-heating 9
Response time 10
Calibration 11
Insulation resistance 11

Installation 11
Orientation 11
Installation instructions 11

Environment 14
Ambient temperature range 14
Storage temperature 14
Humidity 14
Climate class 14
Degree of protection 14
Shock and vibration resistance 14
Electromagnetic compatibility (EMC) 15

Process 15
Process temperature range 15
Thermal shock 15
Process pressure range 15
State of aggregation of the medium 16

Mechanical construction 16
Design, dimensions 16
Weight 17
Material 17
Surface roughness 18
Terminal heads 18
Process connections 20
Shape of tip 22

Certificates and approvals 22
Hygiene standard 23
Materials in contact with food/product (FCM) 23
Other standards and guidelines 23
Material resistance 23
Surface purity 23

Ordering information 23

Accessories 24
Device-specific accessories 24
Service-specific accessories 24
System components 25

Documentation 25

Function and system design

Notes on selecting the right device

iTHERM ModuLine, hygienic

This device is part of the product line of modular thermometers for hygienic and aseptic applications.

Differentiating factors when selecting a suitable thermometer

iTHERM ModuLine TM4x**1**	iTHERM ModuLine TM4x**2**
Metric version	Imperial version

TM4**1**x characterizes the device that uses cutting-edge technology, with features such as a replaceable insert, quick-fastening extension neck (iTHERM QuickNeck), vibration-resistant and fast-response sensor technology iTHERM StrongSens and QuickSens) and approval for use in hazardous areas

iTHERM ModuLine TM411

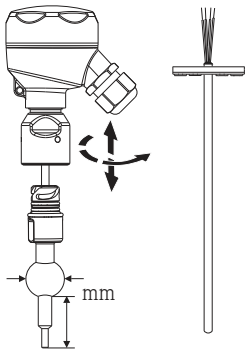

iTHERM ModuLine TM412

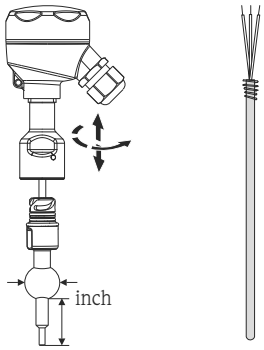

TM4**0**x characterizes the device that uses basic technology, with features such as a fixed, non-replaceable insert, application in non-hazardous areas, standard extension neck, low-cost unit

iTHERM ModuLine TM401

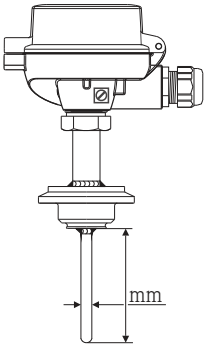

iTHERM ModuLine TM402

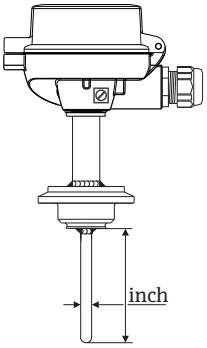

Measuring principle

RTD assembly

These RTD assemblies use a Pt100 temperature sensor according to IEC 60751. The temperature sensor is a temperature-sensitive platinum resistor with a resistance of 100 Ω at 0 °C (32 °F) and a temperature coefficient α = 0.003851 °C^{-1}.

There are generally two different kinds of platinum RTD assemblies:

- **Wire wound (WW):** Here, a double coil of fine, high-purity platinum wire is located in a ceramic support. This is then sealed top and bottom with a ceramic protective layer. Such RTD assemblies not only facilitate very reproducible measurements but also offer good long-term stability of the resistance/temperature characteristic within temperature ranges up to 600 °C (1 112 °F). This type of sensor is relatively large in size and it is comparatively sensitive to vibrations.
- **Thin-film platinum resistance thermometers (TF):** A very thin, ultrapure platinum layer, approx. 1 µm thick, is vaporized in a vacuum on a ceramic substrate and then structured photolithographically. The platinum conductor paths formed in this way create the measuring resistance. Additional covering and passivation layers are applied and reliably protect the thin platinum layer from contamination and oxidation, even at high temperatures.

The primary advantages of thin film temperature sensors over wire wound versions are their smaller sizes and better vibration resistance. A relatively low principle-based deviation of the resistance/temperature characteristic from the standard characteristic of IEC 60751 can frequently be observed among TF sensors at high temperatures. As a result, the tight limit values of tolerance class A as per IEC 60751 can only be observed with TF sensors at temperatures up to approx. 300 °C (572 °F).

Measuring system

The manufacturer provides a complete portfolio of optimized components for the temperature measuring point – everything you need for the seamless integration of the measuring point into the overall facility. In the case of iTHERM hygienic thermometers, this includes:

- Process indicator
- Data Manager

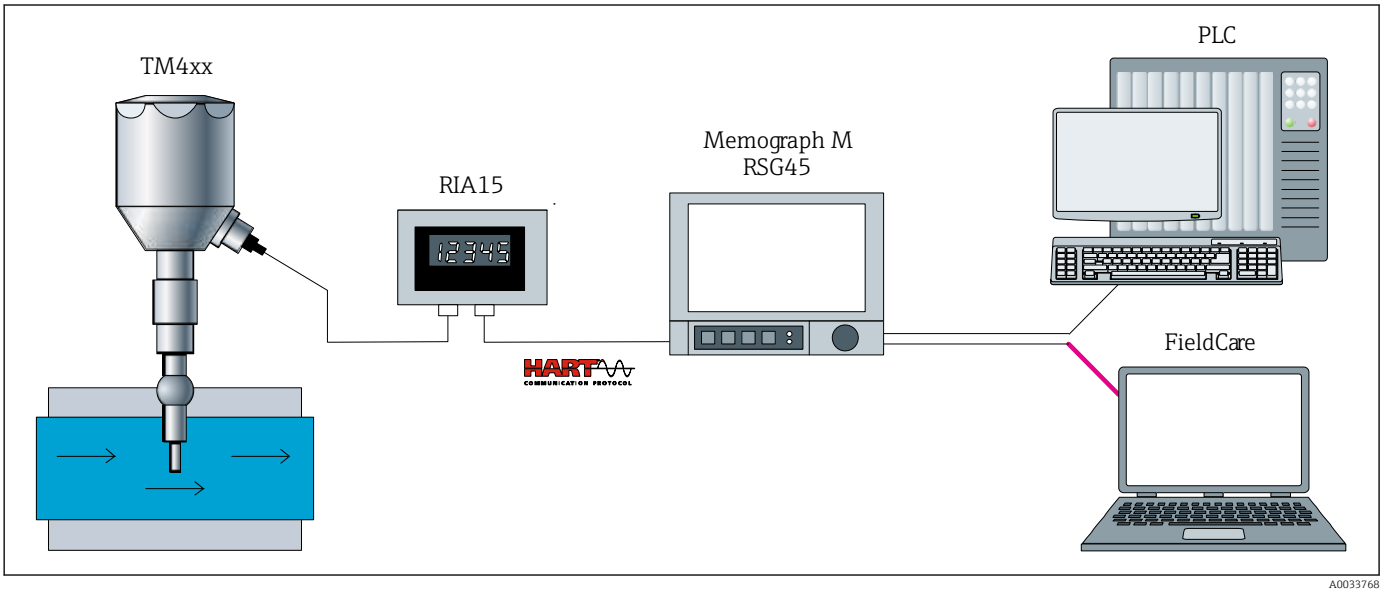

1 Example of application, measuring point layout with additional Endress+Hauser components

- Installed iTHERM thermometer with HART® head transmitter
- Process indicators from the RIA product family:
  - Display of 4 to 20 mA measured values or HART® process variables
  - 2-wire device
  - Voltage drop ≤1 V (HART® ≤1.9 V)
- Data Manager of the RSG product family:
  - Tamper-proof data storage and access (FDA 21 CFR 11)
  - HART® gateway functionality; up to 40 HART® devices connected at a time
  - Communication capabilities: Modbus, Profibus DP, PROFINET, EtherNet/IP
- PLC/FieldCare: Field Data Manager Software MS20 – Automatic service for report generation, printing reports, read out of data, storing of data, secure export, PDF generation. Read out measured data via online interface or from mass storage. Online visualization of instantaneous values ("live data").

Input

Measured variable

Temperature (temperature-linear transmission behavior)

Measuring range

Depends on the type of sensor used

Sensor type [1]	Measuring range
Pt100 (WW)	−200 to +600 °C (−328 to +1 112 °F)
Pt100 (TF) Basic	−50 to +200 °C (−58 to +392 °F)
Pt100 (TF) Standard	−50 to +400 °C (−58 to +752 °F)
Pt100 (TF) iTHERM QuickSens	−50 to +200 °C (−58 to +392 °F)
Pt100 (TF) iTHERM StrongSens	−50 to +500 °C (−58 to +932 °F)
Thermocouple TC, type J	−40 to +750 °C (−40 to +1 382 °F)
Thermocouple TC, type K	−40 to +1 100 °C (−40 to +2 012 °F)
Thermocouple TC, type N	

1) Options depend on product and configuration

Output

Output signal

Generally, the measured value can be transmitted in one of two ways:

- Directly-wired sensors - sensor measured values forwarded without a transmitter.
- Via all common protocols by selecting an appropriate Endress+Hauser iTEMP temperature transmitter. All the transmitters listed below are mounted directly in the terminal head and wired with the sensory mechanism.

Family of temperature transmitters

Thermometers fitted with iTEMP transmitters are an installation-ready complete solution to improve temperature measurement by significantly increasing measurement accuracy and reliability, when compared to direct wired sensors, as well as reducing both wiring and maintenance costs.

4 to 20 mA head transmitters
They offer a high degree of flexibility, thereby supporting universal application with low inventory storage. The iTEMP transmitters can be configured quickly and easily at a PC. Endress+Hauser offers free configuration software which can be downloaded from the Endress+Hauser Website.

HART® head transmitters
The iTEMP transmitter is a 2-wire device with one or two measuring inputs and one analog output. The device not only transfers converted signals from resistance thermometers and thermocouples, it also transfers resistance and voltage signals using HART® communication. Swift and easy operation, visualization and maintenance using universal configuration software like FieldCare, DeviceCare or FieldCommunicator 375/475. Integrated Bluetooth® interface for the wireless display of measured values and configuration via Endress +Hauser SmartBlue (app), optional.

PROFIBUS® PA head transmitters
Universally programmable iTEMP transmitter with PROFIBUS® PA communication. Conversion of various input signals into digital output signals. High measurement accuracy over the complete ambient temperature range. PROFIBUS PA functions and device-specific parameters are configured via fieldbus communication.

FOUNDATION Fieldbus™ head transmitter
Universally programmable iTEMP transmitter with FOUNDATION Fieldbus™ communication. Conversion of various input signals into digital output signals. High measurement accuracy over the complete ambient temperature range. All iTEMP are approved for use in all the main process control systems. The integration tests are performed in Endress+Hauser's 'System World'.

Head transmitter with PROFINET® and Ethernet-APL™
The iTEMP transmitter is a 2-wire device with two measuring inputs. The device not only transfers converted signals from resistance thermometers and thermocouples, it also transfers resistance and voltage signals using the PROFINET® protocol. Power is supplied via the 2-wire Ethernet connection according to IEEE 802.3cg 10Base-T1. The iTEMP can be installed as an intrinsically safe electrical apparatus in Zone 1 hazardous areas. The device can be used for instrumentation purposes in the terminal head form B (flat face) according to DIN EN 50446.

Head transmitter with IO-Link®
The iTEMP transmitter is an IO-Link® device with a measurement input and an IO-Link® interface. It offers a configurable, simple and cost-effective solution thanks to digital communication via IO-Link®. The device is mounted in a terminal head form B (flat face) as per DIN EN 5044.

Advantages of the iTEMP transmitters:
- Double or single sensor input (optionally for certain transmitters)
- Attachable display (optionally for certain transmitters)
- Unsurpassed reliability, accuracy and long-term stability in critical processes
- Mathematical functions
- Monitoring of the thermometer drift, sensor backup functionality, sensor diagnostic functions
- Sensor-transmitter-matching based on the Callendar van Dusen coefficients (CvD).

Wiring

Wiring diagrams

According to the 3-A Sanitary Standard and the EHEDG, electrical connecting cables must be smooth, corrosion-resistant and easy to clean.

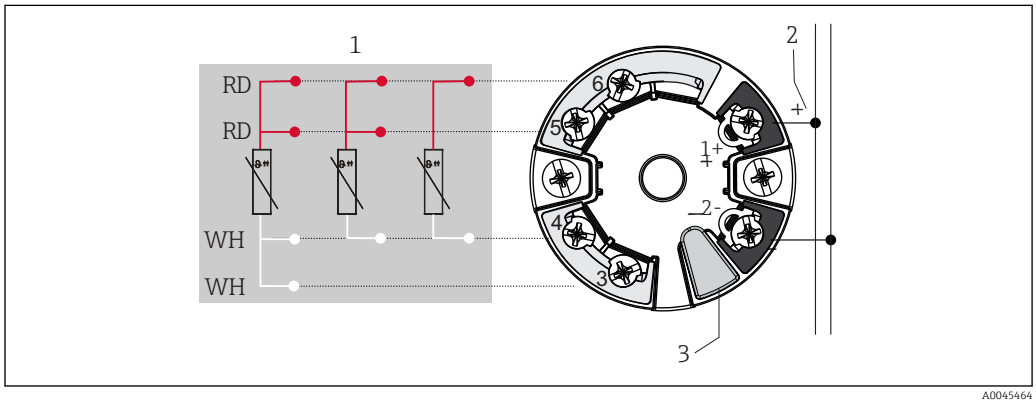

2 Head-mounted iTEMP TMT7x transmitter or iTEMP TMT31 (single sensor input)

1 Sensor input, RTD, 4-, 3- and 2-wire
2 Power supply/bus connection
3 Display connection/CDI interface

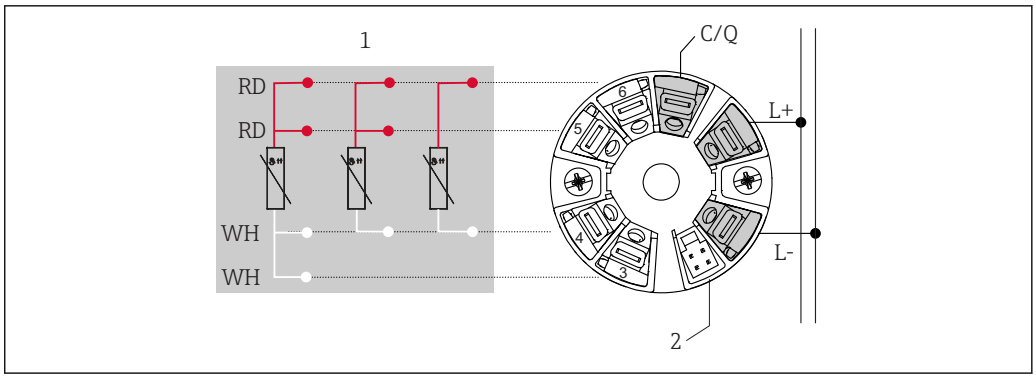

3 *Head-mounted iTEMP TMT36 transmitter (single sensor input)*

1 RTD sensor input: 4-, 3- and 2-wire
2 Display connection
L+ 18 to 30 V_{DC} power supply
L- 0 V_{DC} power supply
C/Q IO-Link or switch output

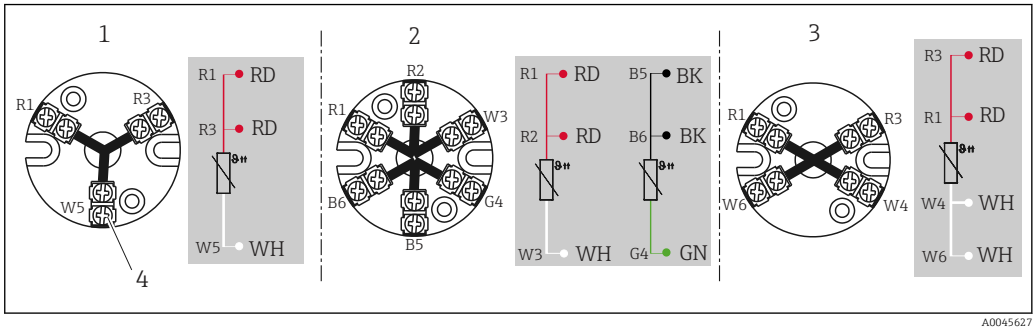

4 *Terminal block mounted*

1 3-wire single
2 2 x 3-wire single
3 4-wire single
4 Outside screw

Cable entries

See the 'Terminal head' section.

Connectors

Terminal head with one cable entry

Plug	4-pin				1x IO-Link®			
Plug thread	M12							
PIN number	1	2	3	4	1	2	3	4
Electrical connection (terminal head)								
Flying leads	Not connected (not insulated)				Not connected (not insulated)			
3-wire terminal block (1x Pt100)	RD	i	RD	WH	Cannot be combined			
4-wire terminal block (1x Pt100)	Cannot be combined				Cannot be combined			
6-wire terminal block (2x Pt100)								
1x TMT 4 to 20 mA or HART®	Cannot be combined				Cannot be combined			
1x TMT PROFIBUS® PA	Cannot be combined				Cannot be combined			
1x TMT FF	Cannot be combined				Cannot be combined			
1x TMT PROFINET®	Cannot be combined				Cannot be combined			

Plug	4-pin	1x IO-Link®			
1x TMT IO-Link®	Cannot be combined	L+	-	L-	C/Q
PIN position and color code	 1 BN 2 GNYE 3 BU 4 GY A0018929	 1 BN 3 BU 4 BK A0055383			

Abbreviations

i	RD	WH	BN	GNYE	BU	GY
Insulated [1]	Red	White	Brown	Green-yellow	Blue	Gray

1) Wires marked 'i' are not connected and are insulated with heat shrink tubes.

Overvoltage protection

To protect against overvoltage in the power supply and signal/communication cables for the thermometer electronics, the manufacturer offers the HAW562 surge arrester for DIN rail mounting and the HAW569 for field housing installation.

For more information, see the Technical Information of the respective devices.

Performance characteristics

Reference operating conditions

This data is relevant for determining the measurement accuracy of the iTEMP transmitters used. See technical documentation of the specific iTEMP transmitter.

Maximum measured error **RTD resistance thermometer as per IEC 60751:**

Class	max. Tolerances (°C)	Characteristics
RTD maximum error type TF		
Cl. A	± (0.15 + 0.002 · |t| [1])	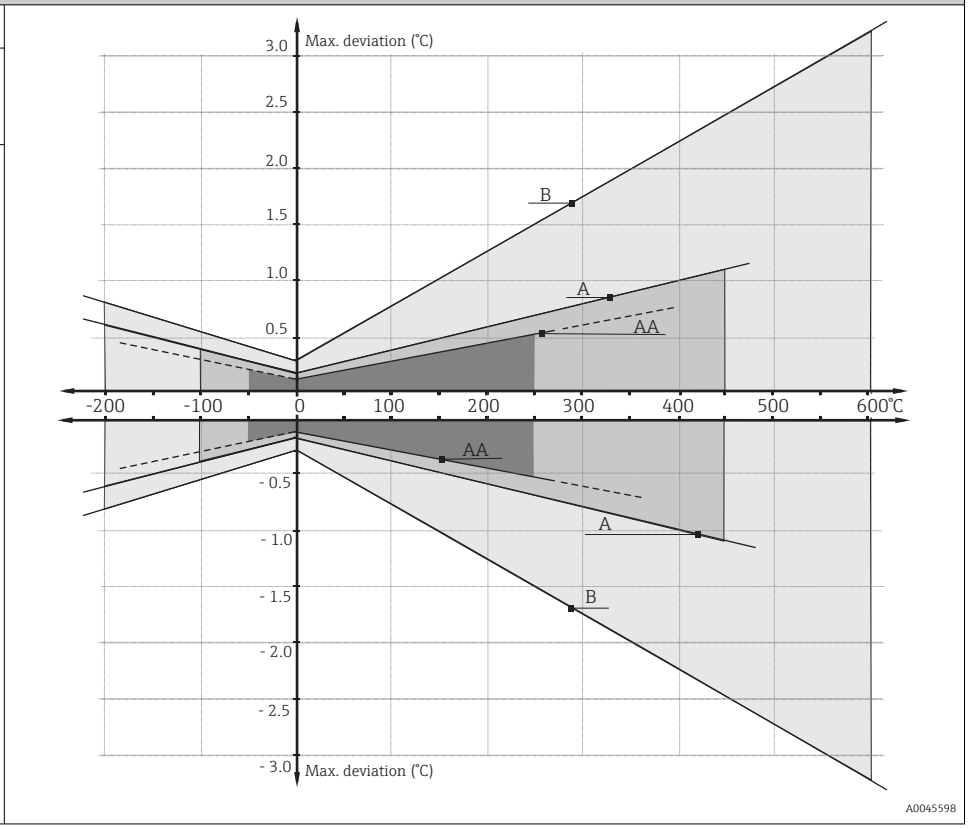
Cl. AA, former 1/3 Cl. B	± (0.1 + 0.0017 · |t|) [1]	
Cl. B	± (0.3 + 0.005 · |t| [1])	

1) |t| = absolute value °C

For measurement errors in °F, calculate using equations in °C, then multiply the outcome by 1.8.

Temperature ranges

Sensor type [1]	Operating temperature range	Class B	Class A	Class AA
Pt100 (TF) Basic	−50 to +200 °C (−58 to +392 °F)	−50 to +200 °C (−58 to +392 °F)	−30 to +200 °C (−22 to +392 °F)	-
Pt100 (TF) Standard	−50 to +400 °C (−58 to +752 °F)	−50 to +400 °C (−58 to +752 °F)	−30 to +250 °C (−22 to +482 °F)	0 to +150 °C (32 to 302 °F)
Pt100 (TF) iTHERM QuickSens	−50 to +200 °C (−58 to +392 °F)	−50 to +200 °C (−58 to +392 °F)	−30 to +200 °C (−22 to +392 °F)	0 to +150 °C (32 to 302 °F)
Pt100 (TF) iTHERM StrongSens	−50 to +500 °C (−58 to +932 °F)	−50 to +500 °C (−58 to +932 °F)	−30 to +300 °C (−22 to +572 °F)	0 to +150 °C (+32 to +302 °F)
Pt100 (WW)	−200 to +600 °C (−328 to +1 112 °F)	−200 to +600 °C (−328 to +1 112 °F)	−100 to +450 °C (−148 to +842 °F)	−50 to +250 °C (−58 to +482 °F)

1) Selection depending on product and configuration

Ambient temperature effect Depends on the head transmitter used. For details, see the Technical Information.

Self-heating RTD elements are passive resistors that are measured using an external current. This measurement current causes a self-heating effect in the RTD element itself which in turn creates an additional

measurement error. In addition to the measurement current, the size of the measurement error is also affected by the temperature conductivity and flow velocity of the process. This self-heating error is negligible when an Endress+Hauser iTEMP temperature transmitter (very small measurement current) is connected.

Response time

Tests in water at 0.4 m/s (1.3 ft/s), according to IEC 60751; 10 K temperature step change.

Pipe diameter	Shape of tip	1x Pt100 thin-film sensor	
		Response time	
		t_{50}	t_{90}
Ø6.35 mm (¼ in)	Straight	5 s	11 s
	Reduced 4.76 mm (3/16 in) x 19.05 mm (0.75 in)	3.5 s	9 s
Ø9.53 mm (⅜ in)	Reduced 4.76 mm (3/16 in) x 19.05 mm (0.75 in)	5 s	10.5 s

Response time without transmitter.

Calibration

Calibration of thermometers
Calibration involves comparing the measured values of a device under test (DUT) with those of a more precise calibration standard using a defined and reproducible measurement method. The aim is to determine the deviation of the DUT's measured values from the true value of the measured variable. Two different methods are used for thermometers:
- Calibration at fixed-point temperatures, e.g. at the freezing point of water at 0 °C,
- Calibration compared against a precise reference thermometer.

The thermometer to be calibrated must display the fixed point temperature or the temperature of the reference thermometer as accurately as possible. Temperature-controlled calibration baths with very homogeneous thermal values, or special calibration furnaces into which the DUT and the reference thermometer, where necessary, can project to a sufficient degree, are typically used for thermometer calibrations.

The measurement uncertainty can increase due to heat dissipation errors and short immersion lengths. The existing measurement uncertainty is listed on the individual calibration certificate.

For accredited calibrations according to ISO17025, the measurement uncertainty shouldn't be twice as high as the accredited measurement uncertainty. If this is exceeded, only a factory calibration can be performed.

For the device, Endress+Hauser offers standard calibrations at a reference temperature of −20 to +200 °C (−4 to +392 °F) based on the ITS90 (International Temperature Scale). Calibrations in other temperature ranges are available from your Endress+Hauser sales center on request. Calibrations are traceable to national and international standards. The calibration certificate is referenced to the serial number of the thermometer.

Insulation resistance

Insulation resistance ≥ 100 MΩ at ambient temperature, measured between the terminals and the outer jacket with a minimum voltage of 100 V_{DC}.

Installation

Orientation

No restrictions. However, self-draining in the process must be guaranteed. If there is an opening to detect leaks at the process connection, this opening must be at the lowest possible point.

Installation instructions

The immersion length of the thermometer can influence the measurement accuracy. If the immersion length is too small, then measurement errors are caused by heat conduction via the process connection and the container wall. Therefore, if installing in a pipe, the immersion length should ideally correspond to half of the pipe diameter.

Installation options: Pipes, tanks or other plant components

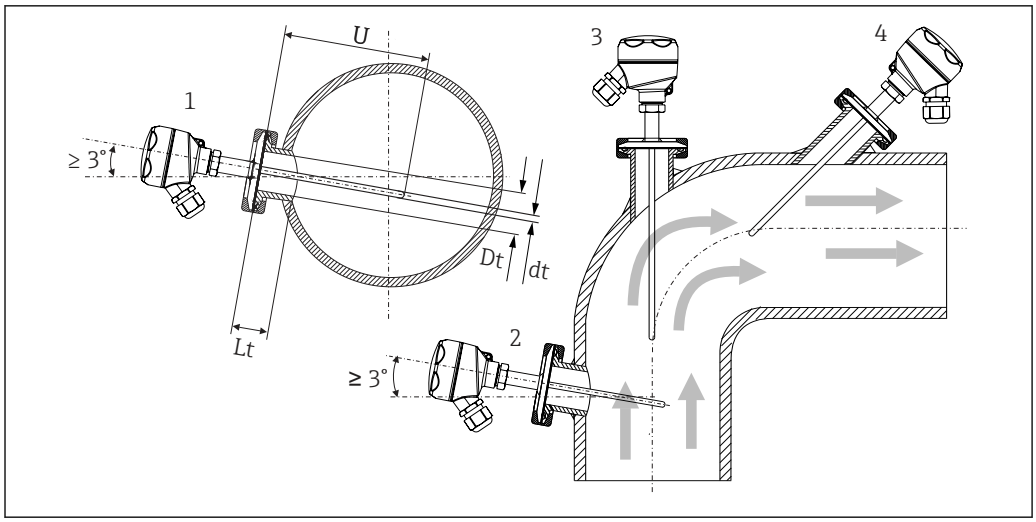

5 *Installation examples*

1, 2 Perpendicular to the flow direction, installed at a min. angle of 3° to ensure self-draining
3 On elbows
4 Inclined installation in pipes with a small nominal diameter
U Immersion length

The requirements of the EHEDG and the 3-A Sanitary Standard must be adhered to.

Installation instructions EHEDG/cleanability: Lt ≤ (Dt-dt)

Installation instructions 3-A/cleanability: Lt ≤ 2 (Dt-dt)

In the case of pipes with a small nominal diameter, it is advisable for the tip of the thermometer to project well into the process so that it extends past the pipe axis. Installation at an angle (4) could be another solution. When determining the immersion length or installation depth, all the parameters of the thermometer and of the medium to be measured must be taken into account (e.g. flow velocity, process pressure).

Pay attention to the exact position of the sensor element in the thermometer tip.

Available options depend on product and configuration.

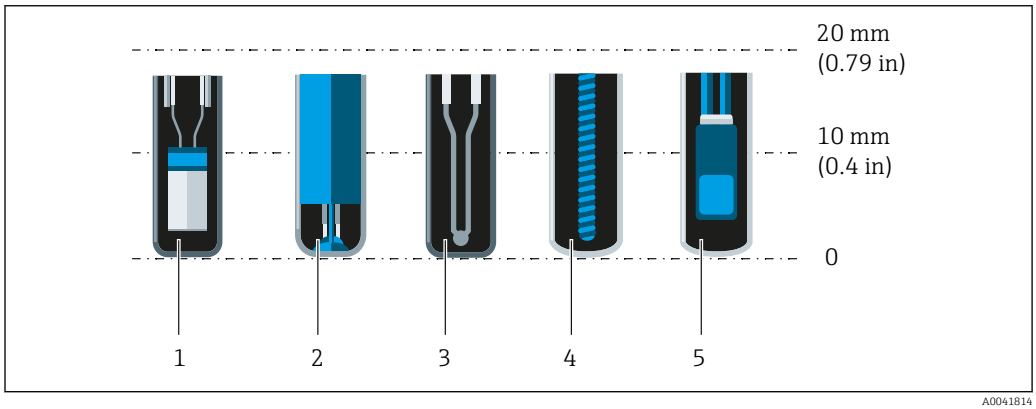

1 StrongSens or TrustSens for 5 to 7 mm (0.2 to 0.28 in)
2 QuickSens for 0.5 to 1.5 mm (0.02 to 0.06 in)
3 Thermocouple (not grounded) for 3 to 5 mm (0.12 to 0.2 in)
4 Wire wound sensor for 5 to 20 mm (0.2 to 0.79 in)
5 Standard thin-film sensor for 5 to 10 mm (0.2 to 0.39 in)

To keep the influence of heat dissipation to a minimum and to achieve the best possible measurement results, 20 to 25 mm (0.79 to 0.98 in) should be in contact with the medium in addition to the actual sensor element.

This results in the following recommended minimum immersion lengths
- TrustSens or StrongSens 30 mm (1.18 in)
- QuickSens 25 mm (0.98 in)
- Wire wound sensor 45 mm (1.77 in)
- Standard thin-film sensor 35 mm (1.38 in)

It is particularly important to take this into consideration for T-pieces, as the immersion length is very short on account of their design, and the measurement error is higher as a result. It is therefore recommended to use elbow pieces with QuickSens sensors.

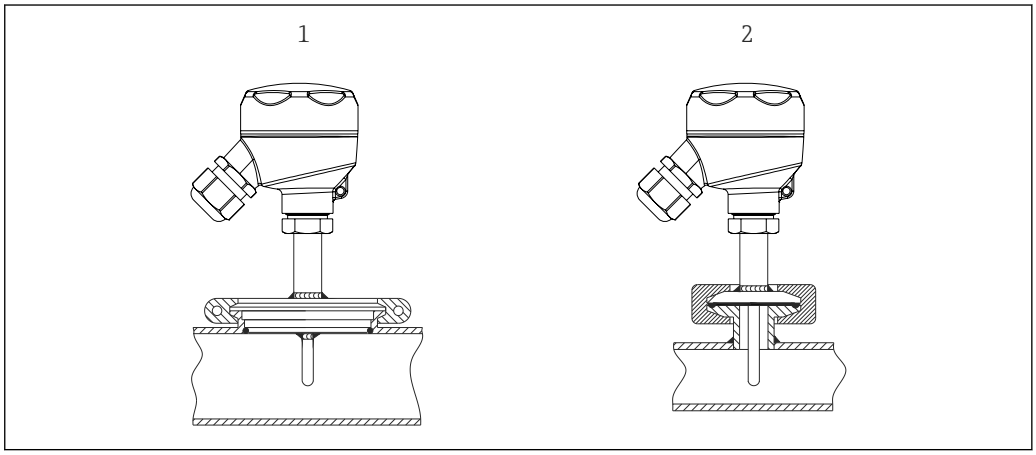

6 Process connections for thermometer installation in pipes with small nominal diameters

1 Varivent® process connection D = 50 mm for DN25 pipes
2 Clamp or micro clamp

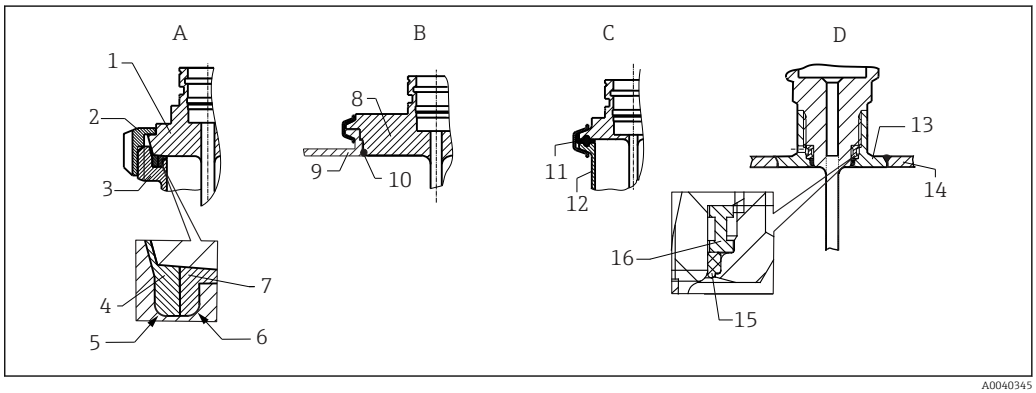

7 Detailed installation instructions for hygiene-compliant installation

A Milk pipe connection according to DIN 11851, only in connection with EHEDG certified and self-centering sealing ring
1 Sensor with milk pipe connection
2 Groove slip-on nut
3 Counterpart connection
4 Centering ring
5 R0.4
6 R0.4
7 Sealing ring
B Varivent® process connection for VARINLINE® housing
8 Sensor with Varivent connection
9 Counterpart connection
10 O-ring
C Clamp according to ISO 2852
11 Molded seal
12 Counterpart connection
D Process connection Liquiphant M G1", horizontal installation
13 Weld-in adapter
14 Vessel wall
15 O-ring
16 Thrust collar

NOTICE

The following actions must be taken if a sealing ring (O-ring) or seal fails:

- The thermometer must be removed.
- The thread and the O-ring joint/sealing surface must be cleaned.
- The sealing ring or seal must be replaced.
- CIP must be performed after installation.

In the case of weld-in connections, exercise the necessary degree of care when performing the welding work on the process side:

1. Use suitable welding material.
2. Flush-weld or weld with welding radius ≥ 3.2 mm (0.13 in).
3. Avoid crevices, folds or gaps.
4. Ensure the surface is honed and polished, Ra ≤ 0.76 µm (30 µin).

Pay attention to the following when installing the thermometer to ensure that the cleanability is not affected:

1. The installed sensor is suitable for CIP (cleaning in place). Cleaning is carried out in combination with piping or tank. In the case of internal tank fixtures using process connection nozzles, it is important to ensure that the cleaning assembly directly sprays this area so that it is cleaned properly.
2. The Varivent® connections enable flush-mounted installation.

Environment

Ambient temperature range

Terminal head [1]	Temperature in °C (°F)
Without head transmitter installed	Depends on the terminal head used and the cable gland or fieldbus connector, see 'Terminal heads' section.
With mounted head transmitter	−40 to 85 °C (−40 to 185 °F) SIL mode (HART 7 transmitter): −40 to 70 °C (−40 to 158 °F)
With mounted head transmitter and display	−30 to +85 °C (−22 to +185 °F)
With mounted field transmitter	▪ Without display: −40 to 85 °C (−40 to 185 °F) ▪ With display: −40 to +80 °C (−40 to +176 °F) ▪ SIL mode: −40 to +75 °C (−40 to +167 °F)

1) Depends on product and configuration.

Storage temperature

−40 to 85 °C (−40 to 185 °F).

Humidity

Depending on the transmitter used. If Endress+Hauser iTEMP head transmitters are used:
- Condensation permitted as per IEC 60 068-2-33.
- Maximum relative humidity: 95% as per IEC 60068-2-30.

Climate class

As per EN 60654-1, Class C.

Degree of protection

Max. IP69K, depending on the design (terminal head, connector, etc.).

Shock and vibration resistance

The Endress+Hauser inserts exceed the requirements of IEC 60751 with regard to shock and vibration resistance of 3g in a range of 10 to 500 Hz. The vibration resistance of the measuring point depends on sensor type and design:

Sensor type [1]	Vibration resistance for the sensor tip
Pt100 (WW)	≤ 30 m/s² (≤ 3g)
Pt100 (TF) Basic	

Sensor type [1]	Vibration resistance for the sensor tip
Pt100 (TF) Standard	≤ 40 m/s² (≤ 4g)
Pt100 (TF) iTHERM StrongSens	600 m/s² (60g)
Pt100 (TF) iTHERM QuickSens, version: ø6 mm (0.24 in)	600 m/s² (60g)
Pt100 (TF) iTHERM QuickSens, version: ø3 mm (0.12 in)	≤ 30 m/s² (≤ 3g)
Thermocouple TC, type J, K, N	≤ 30 m/s² (≤ 3g)

1) Options depend on product and configuration

Electromagnetic compatibility (EMC)

Depends on the iTEMP head transmitter used. See the technical documentation of the specific device.

Process

Process temperature range

Maximum −50 to +200 °C (−58 to +392 °F)

Thermal shock

Thermal shock resistance in CIP/SIP process with a temperature increase from +5 to +130 °C (+41 to +266 °F) within 2 seconds.

Process pressure range

The maximum possible process pressure depends on various influencing factors, such as the design, process connection and process temperature. For information on the maximum possible process pressures for the individual process connections, see the 'Process connection' section. → 20

It is possible to check the mechanical loading capacity as a function of the installation and process conditions online in the Thermowell (TW) Sizing Module for thermowells in the Endress+Hauser Applicator software. See 'Accessories' section.

Example of the permitted flow velocity depending on the immersion length and process medium

The maximum allowable flow velocity to which the thermometer can be exposed decreases as the immersion depth of the insert in the flowing medium increases. In addition, it is dependent on the diameter of the thermometer tip, the medium type, the process temperature and the process pressure. The following figures exemplify the maximum permitted flow velocities in water and superheated steam at a process pressure of 40 bar (580 PSI).

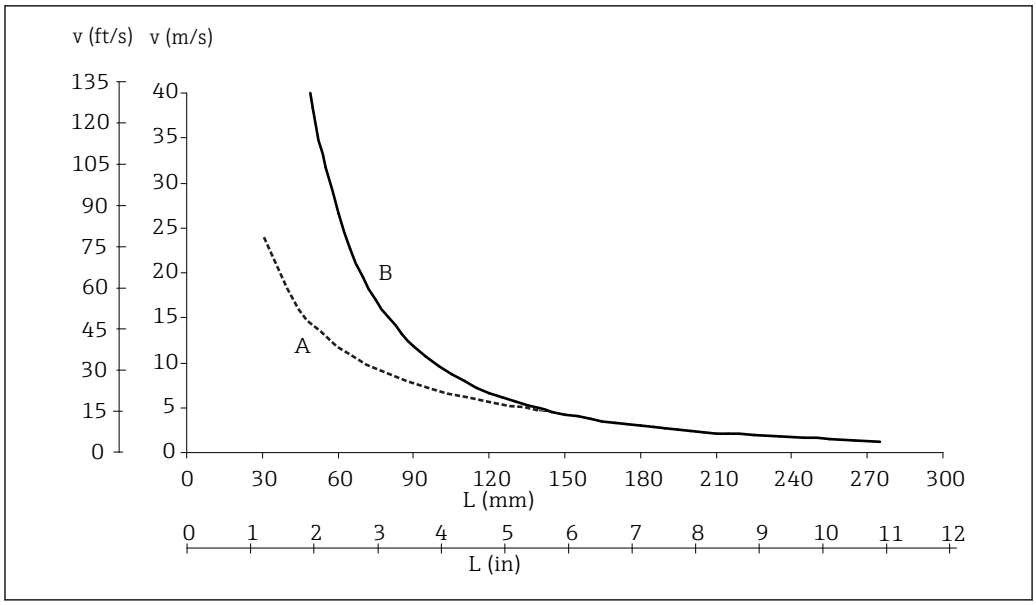

8 Permitted flow velocity, thermowell diameter 6.35 mm (¼ in)

A Medium water at T = 50 °C (122 °F)
B Medium superheated steam at T = 400 °C (752 °F)
L Immersion length exposed to flow
v Flow velocity

State of aggregation of the medium

Gaseous or liquid (also with high viscosity, e.g. yogurt).

Mechanical construction

Design, dimensions

All dimensions in mm (in).

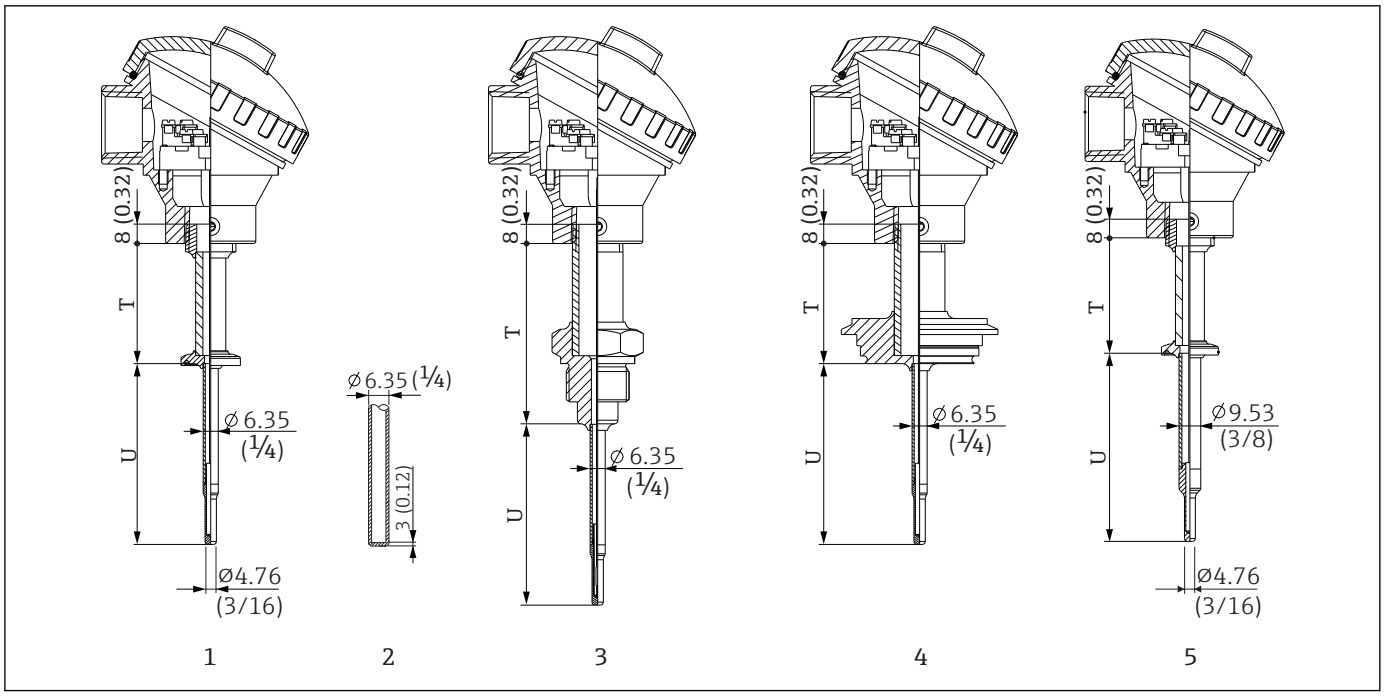

A0034462

1 *Thermometer with clamp process connection and Ø6.35 mm (¼ in) thermowell with reduced tip 4.76 mm (3/16 in)*
2 *Optional for all thermometers with Ø6.35 mm (¼ in) thermowell: straight tip shape*
3 *Thermometer with ISO228 process connection and Ø6.35 mm (¼ in) thermowell with reduced tip Ø4.76 mm (3/16 in)*
4 *Thermometer with Varivent process connection and Ø6.35 mm (¼ in) thermowell with reduced Ø4.76 mm (3/16 in)*
5 *Thermometer with clamp process connection and Ø9.53 mm (⅜ in) thermowell with reduced tip Ø4.76 mm (3/16 in)*
T Extension neck length
U Immersion length

Weight

Depends on product and configuration.

Material

The temperatures for continuous operation specified in the following table are only intended as reference values for use of the various materials in air and without any significant compressive load. The maximum operating temperatures can be reduced considerably in cases where abnormal conditions such as high mechanical load occur or in aggressive media.

Designation	Recommended max. temperature for continuous use in air	Properties
AISI 316L	650 °C (1202 °F) [1]	▪ Austenitic, stainless steel ▪ High corrosion resistance in general ▪ Particularly high corrosion resistance in chlorine-based and acidic, non-oxidizing atmospheres through the addition of molybdenum (e.g. phosphoric and sulfuric acids, acetic and tartaric acids with a low concentration) ▪ Increased resistance to intergranular corrosion and pitting ▪ The wetted part from a 316L thermowell withstand a passivation process with a 3% sulphuric acid ▪ Available with 3-A marked sensors

1) Can be used to a limited extent up to 800 °C (1472 °F) for low compressive loads and in non-corrosive media. Contact your Endress+Hauser sales team for further information.

Surface roughness

Values for wetted surfaces:

Standard surface, mechanically polished [1]	$R_a \leq 0.76$ µm (30 µin)
Mechanically polished, buffed [2]	$R_a \leq 0.38$ µm (15 µin)

1) Or equivalent treatment that guarantees R_a max
2) Not compliant with ASME BPE

Terminal heads

All terminal heads have an internal shape and size in accordance with DIN EN 50446, Form B, and a thermometer connection with a ½" NPT thread. All dimensions in mm (in). The sample cable glands in the diagrams correspond to M20x1.5 connections with non-Ex polyamide cable glands. Specifications without head transmitter installed. For ambient temperatures with head transmitter installed, see the 'Environment' section. → 14

As a special feature, Endress+Hauser offers terminal heads with optimized terminal accessibility for easy installation and maintenance.

TA30A	Specification
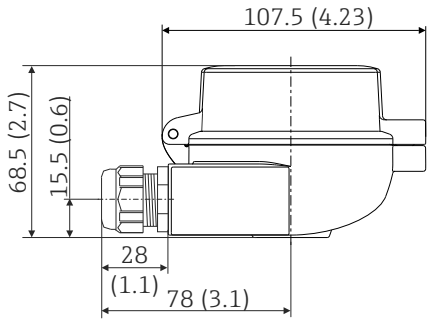	▪ Protection class: ▪ IP66/68 (NEMA Type 4x encl.) ▪ For ATEX: IP66/67 ▪ Temperature: −50 to +150 °C (−58 to +302 °F) without cable gland ▪ Material: aluminum, polyester powder coated Seals: silicone ▪ Cable entry thread: G ½", ½" NPT and M20x1.5; ▪ Protective fitting connection: ½" NPT or M24x1.5 ▪ Head color: blue, RAL 5012 ▪ Cap color: gray, RAL 7035 ▪ Weight: 330g (11.64 oz) ▪ Ground terminal, internal and external ▪ Available with 3-A marked sensors

TA30R (optionally with display window in cover)	Specification
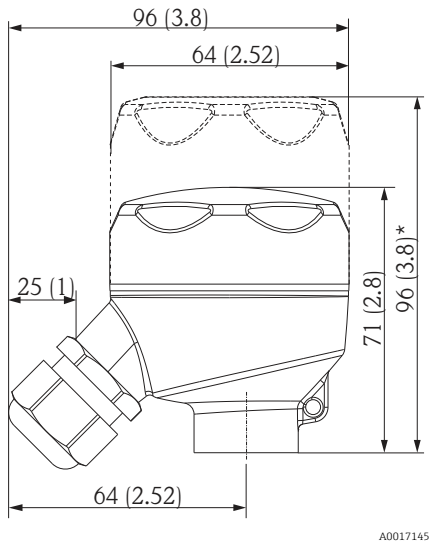 * Dimensions of version with display window in cover	▪ Degree of protection - standard version: IP69K (NEMA Type 4x encl.) Degree of protection - version with display window: IP66/68 (NEMA Type 4x encl.) ▪ Temperature: −50 to +130 °C (−58 to +266 °F) without cable gland ▪ Material: stainless steel 316L, abrasive-blasted or polished Seals: EPDM Display window: polycarbonate (PC) ▪ Cable entry thread ½" NPT and M20x1.5 ▪ Weight ▪ Standard version: 360 g (12.7 oz) ▪ Version with display window: 460 g (16.23 oz) ▪ Display window in cover optionally for head transmitter with display TID10 ▪ Protective fitting connection: M24x1.5 or ½" NPT ▪ Ground terminal: internal in standard version; external terminal optionally available ▪ Available with 3-A marked sensors ▪ Not allowed for Class II and III applications

TA30S	Specification
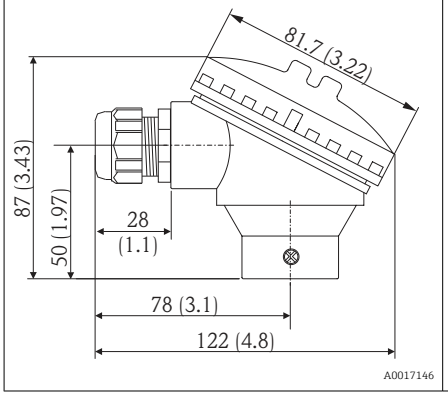	▪ Degree of protection: IP65 (NEMA Type 4x encl.) ▪ Temperature: −40 to +85 °C (−40 to +185 °F) without cable gland ▪ Material: polypropylene (PP), FDA-compliant, seals: O-ring EPDM ▪ Cable entry thread: ¾" NPT (with adapter for ½" NPT), M20x1.5 ▪ Protective assembly connection: ½" NPT ▪ Color: white ▪ Weight: approx. 100 g (3.5 oz) ▪ Ground terminal: only internal via auxiliary terminal ▪ Not allowed for Class II and III applications ▪ Available with 3-A marked sensors

Cable glands and connectors [1)]

Type	Suitable for cable entry	Degree of protection	Temperature range	Suitable cable diameter
Cable gland, polyamide blue (indication of Ex-i circuit)	½" NPT	IP68	−30 to +95 °C (−22 to +203 °F)	7 to 12 mm (0.27 to 0.47 in)
Cable gland, polyamide	½" NPT, ¾" NPT, M20x1.5 (optionally 2x cable entry)	IP68	−40 to +100 °C (−40 to +212 °F)	5 to 9 mm (0.19 to 0.35 in)
	½" NPT, M20x1.5 (optionally 2x cable entry)	IP69K	−20 to +95 °C (−4 to +203 °F)	
Cable gland for dust ignition-proof area, polyamide	½" NPT, M20x1.5	IP68	−20 to +95 °C (−4 to +203 °F)	
Cable gland for dust ignition-proof area, nickel-plated brass	M20x1.5	IP68 (NEMA Type 4x)	−20 to +130 °C (−4 to +266 °F)	
M12 plug, 4-pin, 316 (PROFIBUS® PA, Ethernet-APL™, IO-Link®)	½" NPT, M20x1.5	IP67	−40 to +105 °C (−40 to +221 °F)	-
M12 plug, 8-pin, 316	M20x1.5	IP67	−30 to +90 °C (−22 to +194 °F)	-
7/8" plug, 4-pin, 316 (FOUNDATION ™ Fieldbus, PROFIBUS® PA)	½" NPT, M20x1.5	IP67	−40 to +105 °C (−40 to +221 °F)	-

1) Depending on product and configuration

Cable glands are not available for encapsulated, flameproof thermometers.

Process connections All dimensions in mm (in).

Type	Type of fitting	Dimensions		Technical properties	Conformity
	Ød: [1]	ØD	Øa		
Clamp according to ISO 2852 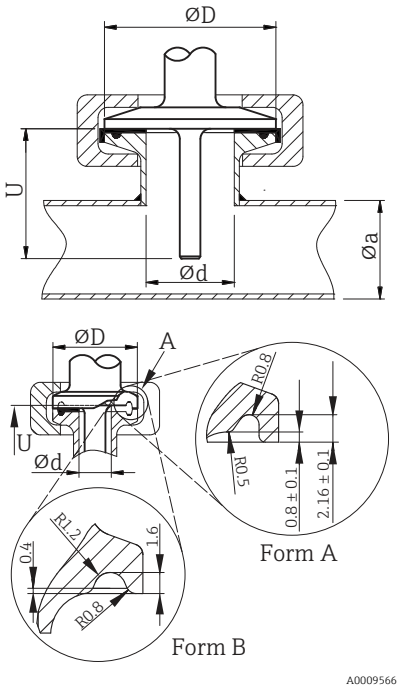 Form A: In compliance with ASME BPE Type A Form B: In compliance with ASME BPE Type B and ISO 2852	Tri-clamp ¾" (DN18) Form A	25 mm (0.98 in)	-	▪ $P_{max.}$ = 16 bar (232 psi), depends on clamp ring and suitable seal ▪ With 3-A symbol	ASME BPE Type A
	Clamp ISO 2852 ½" (DN12 - 21.3) Form B	34 mm (1.34 in)	16 to 25.3 mm (0.63 to 0.99 in)		ISO 2852
	Tri-clamp 1" - 1½" (DN25 - 38) Form B	50.5 mm (1.99 in)	29 to 42.4 mm (1.14 to 1.67 in)	▪ $P_{max.}$ = 16 bar (232 psi), depends on clamp ring and suitable seal ▪ With 3-A symbol and EHEDG certification (combined with Combifit seal)	ASME BPE Type B
	Tri-clamp 2" (DN40 - 51) Form B	64 mm (2.52 in)	44.8 to 55.8 m m (1.76 to 2.2 in)		

1) Pipes in accordance with ISO 2037 and BS 4825 Part 1

Type	Version G	Dimensions			Technical properties
		L1 thread length	A	1 (SW/AF)	
Thread according to ISO 228 (for Liquiphant weld-in adapter) 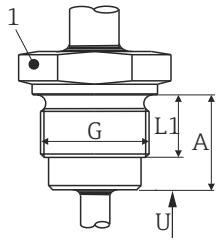 	G¾" for FTL20/31/33 adapter	16 mm (0.63 in)	25.5 mm (1 in)	32	▪ $P_{max.}$ = 25 bar (362 psi) at max. 150 °C (302 °F) ▪ $P_{max.}$ = 40 bar (580 psi) at max. 100 °C (212 °F) ▪ For more information about hygienic compliance in conjunction with FTL31/33/50 adapters, see Technical Information TI00426F.
	G¾" for FTL50 adapter				
	G1" for FTL50 adapter	18.6 mm (0.73 in)	29.5 mm (1.16 in)	41	

Type	Type of fitting [1]	Dimensions				Technical properties	
		ϕD	ϕA	ϕB	h	$P_{max.}$	
Varivent® 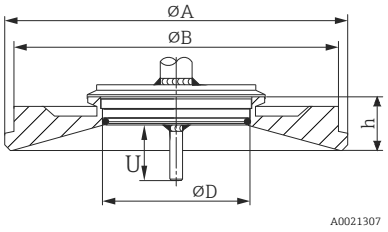	Type B	31 mm (1.22 in)	105 mm (4.13 in)	-	22 mm (0.87 in)	10 bar (145 psi)	▪ With 3-A symbol and EHEDG certification ▪ ASME BPE compliance
	Type F	50 mm (1.97 in)	145 mm (5.71 in)	135 mm (5.31 in)	24 mm (0.95 in)		
	Type N	68 mm (2.67 in)	165 mm (6.5 in)	155 mm (6.1 in)	24.5 mm (0.96 in)		

The VARINLINE® housing connection flange is suitable for welding into the conical or torispherical head in tanks or containers with a small diameter (≤ 1.6 m (5.25 ft)) and up to a wall thickness of 8 mm (0.31 in).
Varivent® Type F cannot be used for installations in pipes in combination with the VARINLINE® housing connection flange.

1) Options depend on product and configuration

Type	Technical properties
Varivent® for VARINLINE® housing for installation in pipes 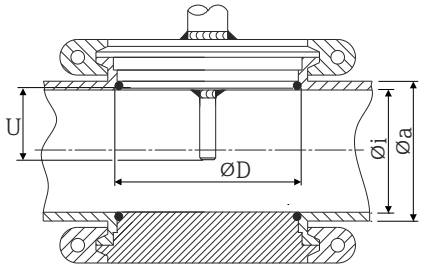	▪ With 3-A symbol and EHEDG certification ▪ ASME BPE compliance

Type of fitting [1]	Dimensions			$P_{max.}$
	ϕD	ϕi	ϕa	
Type N, according to DIN 11866, series A	68 mm (2.67 in)	DN40: 38 mm (1.5 in)	DN40: 41 mm (1.61 in)	DN40 to DN65: 16 bar (232 psi)
		DN50: 50 mm (1.97 in)	DN50: 53 mm (2.1 in)	
		DN65: 66 mm (2.6 in)	DN65: 70 mm (2.76 in)	
		DN80: 81 mm (3.2 in)	DN80: 85 mm (3.35 in)	DN80 to DN150: 10 bar (145 psi)
		DN100: 100 mm (3.94 in)	DN100: 104 mm (4.1 in)	
		DN125: 125 mm (4.92 in)	DN125: 129 mm (5.08 in)	
		DN150: 150 mm (5.9 in)	DN150: 154 mm (6.06 in)	
Type N, according to EN ISO 1127, series B	68 mm (2.67 in)	38.4 mm (1.51 in)	42.4 mm (1.67 in)	42.4 mm (1.67 in) to 60.3 mm (2.37 in): 16 bar (232 psi)
		44.3 mm (1.75 in)	48.3 mm (1.9 in)	
		56.3 mm (2.22 in)	60.3 mm (2.37 in)	
		72.1 mm (2.84 in)	76.1 mm (3 in)	76.1 mm (3 in) to 114.3 mm (4.5 in): 10 bar (145 psi)
		82.9 mm (3.26 in)	42.4 mm (3.5 in)	
		108.3 mm (4.26 in)	114.3 mm (4.5 in)	
Type N, according to DIN 11866, series C	68 mm (2.67 in)	OD 1½": 34.9 mm (1.37 in)	OD 1½": 38.1 mm (1.5 in)	OD 1½" to OD 2½": 16 bar (232 psi)
		OD 2": 47.2 mm (1.86 in)	OD 2": 50.8 mm (2 in)	
		OD 2½": 60.2 mm (2.37 in)	OD 2½": 63.5 mm (2.5 in)	
Type N, according to DIN 11866, series C	68 mm (2.67 in)	OD 3": 73 mm (2.87 in)	OD 3": 76.2 mm (3 in)	OD 3" to OD 4": 10 bar (145 psi)

Type				Technical properties
		OD 4": 97.6 mm (3.84 in)	OD 4": 101.6 mm (4 in)	
Type F, according to DIN 11866, series C	50 mm (1.97 in)	OD 1": 22.2 mm (0.87 in)	OD 1": 25.4 mm (1 in)	16 bar (232 psi)

1) Options depend on product and configuration

Shape of tip

The thermal response time, the reduction of the flow cross-section and the mechanical load that occurs in the process are the criteria that matter when selecting the shape of the tip. Advantages of using reduced thermometer tips:
- A smaller tip shape has less impact on the flow characteristics of the pipe carrying the medium.
- The flow characteristics are optimized, thereby increasing the stability of the thermowell.
- Endress+Hauser offers users a range of thermowell tips to meet every requirement:
  - Straight tip
  - Reduced tip of Φ4.76 mm (3/16 in): walls of lower thickness significantly reduce the response times of the overall measuring point
  - Reduced tip for tee and elbow thermowell with Φ4.5 mm (0.18 in)

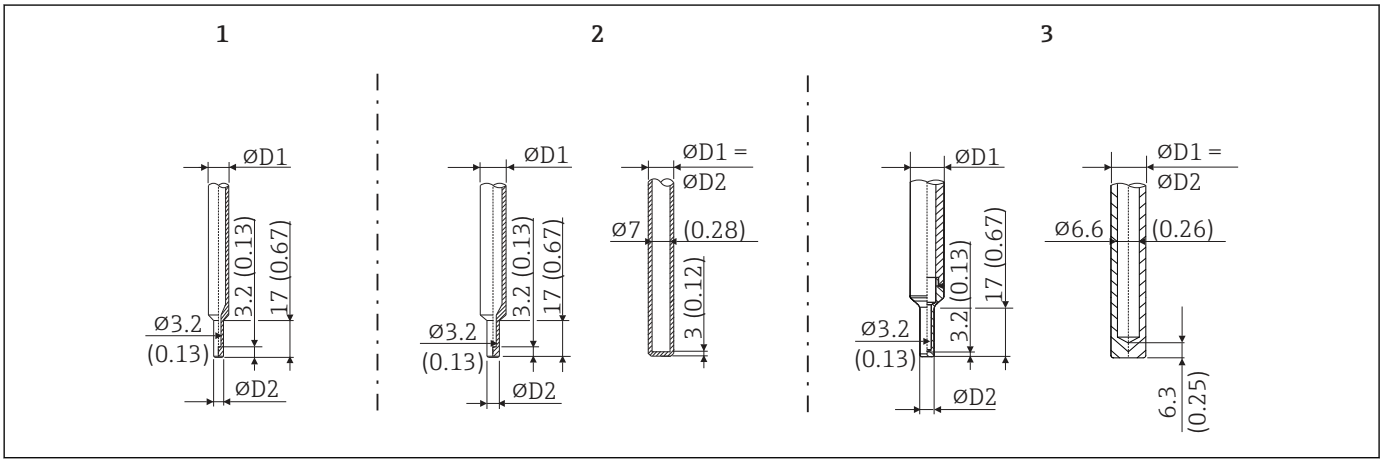

9 Thermowell tips available (reduced or straight)

Item no.	Thermowell (ΦD1)	Tip (ΦD2)	Insert (ΦID)
1	Φ6.35 mm (¼ in)	Reduced tip of Φ4.76 mm (3/16 in)	Φ3 mm (0.12 in)
2	Φ9.53 mm (⅜ in)	▪ Reduced tip of Φ4.76 mm (3/16 in) ▪ Straight tip	▪ Φ3 mm (0.12 in) ▪ Φ6.35 mm (¼ in) or 6 mm (0.24 in)
3	Φ12.7 mm (½ in)	▪ Reduced tip of Φ4.76 mm (3/16 in) ▪ Straight tip	▪ Φ3 mm (0.12 in) ▪ Φ6.35 mm (¼ in) or 6 mm (0.24 in)

It is possible to check the mechanical loading capacity as a function of the installation and process conditions online in the TW Sizing Module for thermowells in the Endress+Hauser Applicator software. See 'Accessories' section. → 24

Certificates and approvals

Current certificates and approvals for the product are available at www.endress.com on the relevant product page:

1. Select the product using the filters and search field.
2. Open the product page.
3. Select **Downloads**.

Hygiene standard	▪ ASME BPE (latest revision), Certificate of Conformance can be ordered for designated options. ▪ 3-A Certificate Authorization number 1144, 3-A Sanitary Standard 74-07. Listed process connections. ▪ EHEDG Certificate, Type EL CLASS I. EHEDG certified/tested process connections. ▪ FDA-compliant. ▪ All process contact parts comply with the requirements of guidance EMA/410/01 Rev.3. Furthermore, no grinding and polishing agents of animal origin have been used during the entire production of the process contact parts.
Materials in contact with food/product (FCM)	The process contact parts (FCM) are in conformity with the following European Regulations: ▪ Regulation (EC) No 1935/2004, on materials and articles intended to come into contact with food, article 3, paragraph 1, article 5 and 17. ▪ Regulation (EC) No 2023/2006 on good manufacturing practice for materials and articles intended to come into contact with food. ▪ Regulation (EU) No 10/2011 on plastic materials and articles intended to come into contact with food.
Other standards and guidelines	▪ IEC 60529: Degrees of protection provided by enclosures (IP code) ▪ IEC 61010-1: Safety requirements for electrical equipment for measurement, control and laboratory use ▪ IEC 60751: Industrial platinum resistance thermometers ▪ ASTM E 1137/E1137M-2008: Standard Specification for Industrial Platinum Resistance Thermometers ▪ EN 50281-1-1: Electrical apparatus protected by enclosures ▪ DIN EN 50446: Terminal heads ▪ IEC 61326-1: Electromagnetic compatibility (electrical equipment for measurement, control and laboratory use - EMC requirements) ▪ PMO: Pasteurized Milk Ordinance 2001 Revision, U.S. Food and Drug Administration, Center for Food Safety & Applied Nutrition
Material resistance	Material resistance - including resistance of housing - to the following Ecolab cleaning/disinfection agents: ▪ P3-topax 66 ▪ P3-topactive 200 ▪ P3-topactive 500 ▪ P3-topactive OKTO ▪ And demineralized water
Surface purity	Free from oil and grease, optional.

Ordering information

Detailed ordering information is available from your nearest sales organization www.addresses.endress.com or in the Product Configurator at www.endress.com:

1. Select the product using the filters and search field.
2. Open the product page.
3. Select **Configuration**.

Product Configurator - the tool for individual product configuration
- Up-to-the-minute configuration data
- Depending on the device: direct input of information specific to the measuring point, such as the measuring range or operating language
- Automatic verification of exclusion criteria
- Automatic creation of the order code and its breakdown in PDF or Excel output format
- Ability to order directly in the Endress+Hauser Online Shop

Accessories

The accessories currently available for the product can be selected at www.endress.com:

1. Select the product using the filters and search field.
2. Open the product page.
3. Select **Spare parts & Accessories**.

Device-specific accessories

Weld-in adapter

For more information about order codes and hygienic compliance of the adapters and spare parts, see Technical Information (TI00426F).

Weld-in adapter	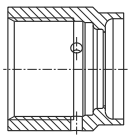 A0008246	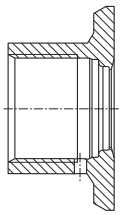 A0008251	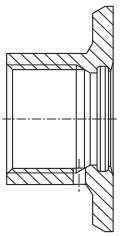 A0008256	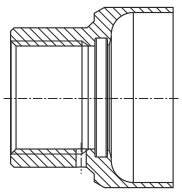 A0011924	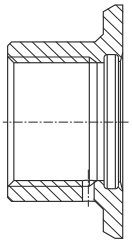 A0008248	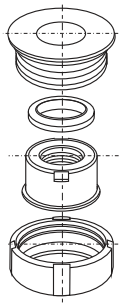 A0008253
	G ¾", d=29 for pipe-mounting	**G ¾", d=50 for vessel-mounting**	**G ¾", d=55 with flange**	**G 1", d=53 without flange**	**G 1", d=60 with flange**	**G 1" adjustable**
Material	316L (1.4435)	316L (1.4435)	316L (1.4435)	316L (1.4435)	316L (1.4435)	316L (1.4435)
Roughness µm (µin) process side	≤1.5 (59.1)	≤0.8 (31.5)	≤0.8 (31.5)	≤0.8 (31.5)	≤0.8 (31.5)	≤0.8 (31.5)

Maximum process pressure for the weld-in adapters:
- 25 bar (362 PSI) at maximum 150 °C (302 °F)
- 40 bar (580 PSI) at maximum 100 °C (212 °F)

Service-specific accessories

Accessories	Description
Applicator	Software for selecting and sizing Endress+Hauser devices: ▪ Calculation of all the necessary data for identifying the optimum device: e.g. pressure loss, accuracy or process connections. ▪ Graphic illustration of the calculation results Administration, documentation and access to all project-related data and parameters over the entire life cycle of a project. Applicator is available: Via the Internet: https://portal.endress.com/webapp/applicator

Accessories	Description
Configurator	Product Configurator - the tool for individual product configuration ▪ Up-to-the-minute configuration data ▪ Depending on the device: direct input of information specific to the measuring point, such as the measuring range or operating language ▪ Automatic verification of exclusion criteria ▪ Automatic creation of the order code and its breakdown in PDF or Excel output format ▪ Ability to order directly in the Endress+Hauser Online Shop The Product Configurator is available on the Endress+Hauser website: www.endress.com-> Select your country -> Click "Products" -> Select the product using the filters and search field -> Open product page -> The "Configure" button to the right of the product image opens the Product Configurator.

FieldCare SFE500	FDT-based plant asset management tool from Endress+Hauser. It can configure all smart field units in your system and helps you manage them. By using the status information, it is also a simple but effective way of checking their status and condition. For details, see Operating Instructions BA00027S and BA00065S
DeviceCare SFE100	Configuration tool for devices via fieldbus protocols and Endress+Hauser service protocols. DeviceCare is the tool developed by Endress+Hauser for the configuration of Endress+Hauser devices. All smart devices in a plant can be configured via a point-to-point or point-to-bus connection. The user-friendly menus enable transparent and intuitive access to the field devices. For details, see Operating Instructions BA00027S

System components

Process indicators from the RIA product family

Easily readable process indicators with various functions: loop-powered indicators for displaying 4 to 20 mAvalues, display of up to four HART variables, process indicators with control units, limit value monitoring, sensor power supply, and galvanic isolation.

Universal application thanks to international hazardous area approvals, suitable for panel mounting or field installation..

For more information, please refer to: www.endress.com

RN series active barrier

Single- or two-channel active barrier for safe separation of 0/4 to 20 mA standard signal circuits with bidirectional HART transmission. In the signal duplicator option, the input signal is transmitted to two galvanically isolated outputs. The device has one active and one passive current input; the outputs can be operated actively or passively.

For more information, please refer to: www.endress.com

Data Manager of the RSG product family

Data Managers are flexible and powerful systems to organize process values. Up to 20 universal inputs and up to 14 digital inputs for direct connection of sensors, optionally with HART, are available as an option. The measured process values are clearly presented on the display and logged safely, monitored for limit values and analyzed. The values can be forwarded via common communication protocols to higher-level systems and connected to one another via individual plant modules.

For more information, please refer to: www.endress.com

Documentation

The following document types are available in the Downloads area of the Endress+Hauser website (www.endress.com/downloads), depending on the device version:

Document type	Purpose and content of the document
Technical Information (TI)	**Planning aid for your device** The document contains all the technical data on the device and provides an overview of the accessories and other products that can be ordered for the device.
Brief Operating Instructions (KA)	**Guide that takes you quickly to the 1st measured value** The Brief Operating Instructions contain all the essential information from incoming acceptance to initial commissioning.
Operating Instructions (BA)	**Your reference document** The Operating Instructions contain all the information that is required in various phases of the life cycle of the device: from product identification, incoming acceptance and storage, to mounting, connection, operation and commissioning through to troubleshooting, maintenance and disposal.

Document type	Purpose and content of the document
Description of Device Parameters (GP)	**Reference for your parameters** The document provides a detailed explanation of each individual parameter. The description is aimed at those who work with the device over the entire life cycle and perform specific configurations.
Safety instructions (XA)	Depending on the approval, safety instructions for electrical equipment in hazardous areas are also supplied with the device. These are an integral part of the Operating Instructions. The nameplate indicates which Safety Instructions (XA) apply to the device.
Supplementary device-dependent documentation (SD/FY)	Always comply strictly with the instructions in the relevant supplementary documentation. The supplementary documentation is a constituent part of the device documentation.



www.addresses.endress.com

Endress+Hauser

People for Process Automation