TI01446T/09/EN/05.25-00
71712336
2025-05-12

Technical Information
iTHERM ModuLine TM101

Industrial modular thermometer



Metric, direct-contact RTD/TC basic thermometer for a wide range of industrial applications

Application

- For universal use
- For use in non-hazardous areas
- Measuring range: −50 to +650 °C (−58 to +1 202 °F)
- Pressure range up to 50 bar (725.2 psi)
- Degree of protection: up to IP 68

Head transmitter

Endress+Hauser transmitters are available with enhanced measurement accuracy and reliability compared to directly wired sensors. Easy customizing by choosing one of the following outputs and communication protocols:

- Analog output 4 to 20 mA, HART®
- IO-Link®

Your benefits

- Excellent value for money and fast global delivery
- User-friendly product selection, smart design for easy maintenance
- Wide range of process connections: thread and compression fittings
- Bluetooth® connectivity (optional)

Endress+Hauser
People for Process Automation

Table of contents

About this document 3
Symbols 3

Function and system design 4
iTHERM ModuLine 4
Measuring principle 5
Measuring system 5
Modular design 6

Input 8
Measured variable 8
Measuring range 8

Output 8
Output signal 8
Family of temperature transmitters 8

Power supply 9
Terminal assignment 9
Terminals 11
Cable entries 11
Device plug 11
Overvoltage protection 12

Performance characteristics 12
Reference conditions 12
Maximum measurement error 13
Influence of ambient temperature 14
Self-heating 14
Response time 14
Calibration 14
Insulation resistance 15

Installation 15
Orientation 15
Installation instructions 16

Environment 17
Ambient temperature range 17
Storage temperature 17
Humidity 17
Climate class 17
Degree of protection 17
Shock and vibration resistance 17
Electromagnetic compatibility (EMC) 18

Process 18
Process temperature range 18
Process pressure range 18

Mechanical construction 18
Design, dimensions 18
Weight 20
Material 20
Process connections 21
Inserts 23
Surface roughness 23
Terminal heads 23

Certificates and approvals 25

Ordering information 25

Accessories 26
Service-specific accessories 26
Online tools 26
System components 26

Documentation 27

About this document

Symbols

Electrical symbols

	Direct current		Alternating current		Direct and alternating current
	Ground connection		Protective earth (PE)		

Symbols for certain types of information

Symbol	Meaning
	**Permitted** Procedures, processes or actions that are permitted.
	**Preferred** Procedures, processes or actions that are preferred.
	**Forbidden** Procedures, processes or actions that are forbidden.
	**Tip** Indicates additional information.
	Reference to documentation
	Reference to page
	Reference to graphic
	Visual inspection

Symbols in graphics

Symbol	Meaning	Symbol	Meaning
1, 2, 3,...	Item numbers	1., 2., 3...	Series of steps
A, B, C, ...	Views	A-A, B-B, C-C, ...	Sections
	Hazardous area		Safe area (non-hazardous area)

Function and system design

iTHERM ModuLine This thermometer is part of the product line of modular thermometers for industrial applications.

Differentiating factors when selecting a suitable thermometer:

Thermowell	**Direct contact - without thermowell**		**Thermowell, welded**		**Thermowell from barstock material**
Device type	Metric				
Thermometer	TM101 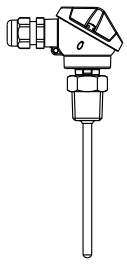 A0039102	TM111 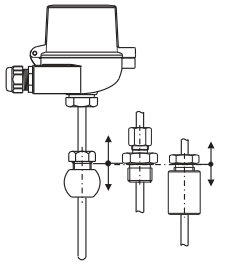 A0038281	TM121 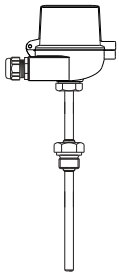 A0038194	TM131 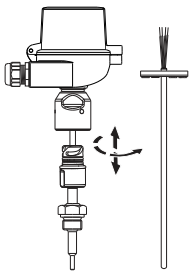 A0038195	TM151 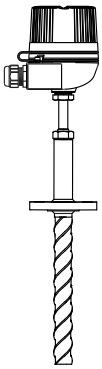 A0052360
FLEX segment	**F**	**E**	**F**	**E**	**E**
Properties	Excellent price-performance ratio	iTHERM StrongSens and QuickSens inserts	Excellent price-performance ratio with thermowell	▪ iTHERM StrongSens and QuickSens inserts ▪ iTHERM QuickNeck ▪ Fast response times ▪ Dual Seal technology ▪ Dual compartment housing	▪ iTHERM StrongSens and iTHERM QuickSens inserts ▪ iTHERM QuickNeck ▪ iTHERM TwistWell ▪ Fast response times ▪ Dual Seal technology ▪ Dual compartment housing
Hazardous area	-	EX	-	EX	EX

Measuring principle

Resistance thermometers (RTD)

These resistance thermometers use a Pt100 temperature sensor according to IEC 60751. The temperature sensor is a temperature-sensitive platinum resistor with a resistance of 100 Ω at 0 °C (32 °F) and a temperature coefficient $\alpha = 0.003851\ °C^{-1}$.

There are generally two different kinds of platinum resistance thermometers:

- **Wire-wound (WW):WW** In these thermometers, a double coil of fine, high-purity platinum wire is accommodated in a ceramic support. This support is then sealed top and bottom with a ceramic protective layer. Such resistance thermometers not only facilitate very reproducible measurements but also offer good long-term stability of the resistance/temperature characteristic within temperature ranges up to 600 °C (1 112 °F). This type of sensor is relatively large in size and is comparatively sensitive to vibrations.
- **Thin-film platinum resistance thermometers(TF):** A very thin, ultrapure platinum layer, approx. 1 µm thick, is vaporized in a vacuum on a ceramic substrate and then structured photolithographically. The platinum conductor paths formed in this way create the measuring resistance. Additional covering and passivation layers are applied and reliably protect the thin platinum layer from contamination and oxidation, even at high temperatures.

The primary advantages of thin-film temperature sensors over wire wound versions are their smaller sizes and better vibration resistance. It should be noted that, due to the operating principle of TF sensors, they frequently exhibit a relatively slight deviation in their resistance/temperature characteristic from the standard characteristic defined in IEC 60751 at higher temperatures. As a result, the tight limit values of tolerance class A as per IEC 60751 can only be observed with TF sensors at temperatures up to approx. 300 °C (572 °F).

Thermocouples (TC)

Thermocouples are comparatively simple, robust temperature sensors which use the Seebeck effect for temperature measurement: if two electrical conductors made of different materials are connected at a point, a weak electrical voltage can be measured between the two open conductor ends if the conductors are subjected to a thermal gradient. This voltage is called thermoelectric voltage or electromotive force (emf). Its magnitude depends on the type of conducting materials and the temperature difference between the "measuring point" (the junction of the two conductors) and the "cold junction" (the open conductor ends). Accordingly, thermocouples primarily only measure differences in temperature. The absolute temperature at the measuring point can be determined from these if the associated temperature at the cold junction is known or is measured separately and compensated for. The material combinations and associated thermoelectric voltage/temperature characteristics of the most common types of thermocouple are standardized in the IEC 60584 and ASTM E230/ANSI MC96.1 standards.

Measuring system

Endress+Hauser offers a complete portfolio of optimized components for the temperature measuring point – everything needed for the seamless integration of the measuring point into the overall facility. These include:

- Power supply unit/barrier
- Display units
- Overvoltage protection

For more information, see the brochure "System Components - Solutions for a Complete Measuring Point" (FA00016K)

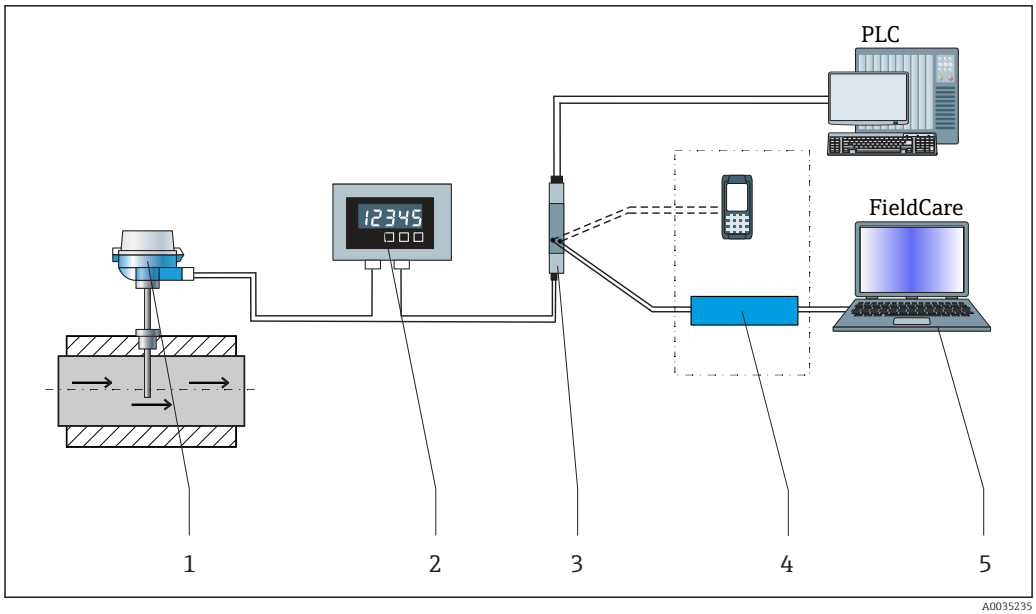

1 *Example of application, measuring point layout with additional Endress+Hauser components*

1 *Installed iTHERM thermometer with HART® communication protocol*
2 *Process indicator from the RIA product family. The process indicator is integrated into the current loop and displays the measuring signal or HART® process variables in digital form. The process indicator does not require an external power supply. It is powered directly from the current loop.*
3 *RN Series active barrier - The active barrier (17.5 V_{DC}, 20 mA) has a galvanically isolated output for supplying voltage to loop-powered transmitters. The universal power supply works with an input supply voltage of 24 to 230 V AC/DC, 0/50/60 Hz, which means that it can be used in all international power grids.*
4 *Communication examples: HART® Communicator (handheld terminal), FieldXpert, Commubox FXA195 for intrinsically safe HART® communication with FieldCare via USB interface*
5 *FieldCare is a FDT-based plant asset management tool from Endress+Hauser, for details see section "accessories".*

Modular design

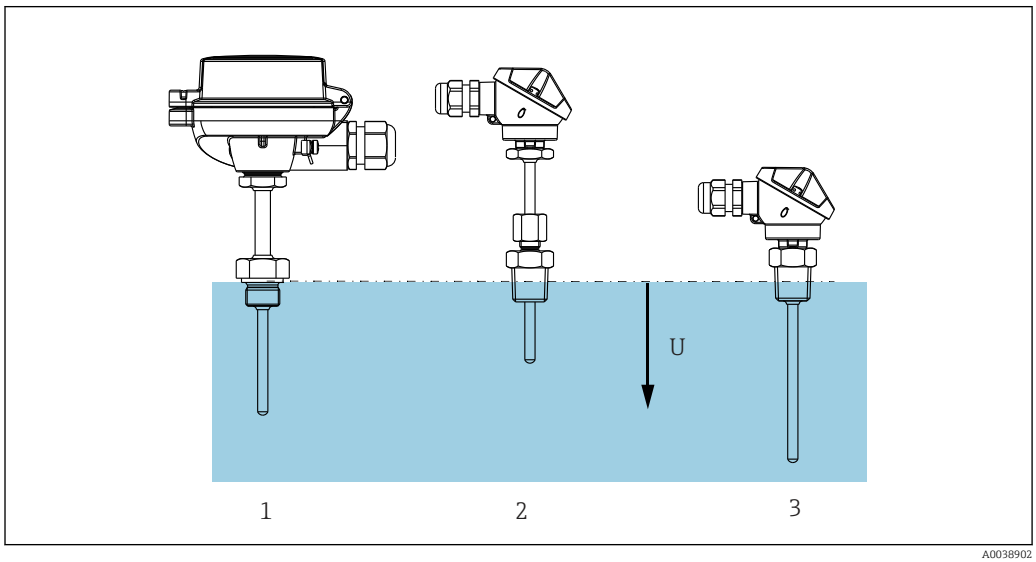

2 *The thermometer is designed for direct process installation*

1 *With lagging and threaded process connection*
2 *Process connection via compression fitting*
3 *Threaded process connection without lagging*
U *Immersion length*

Design		Options
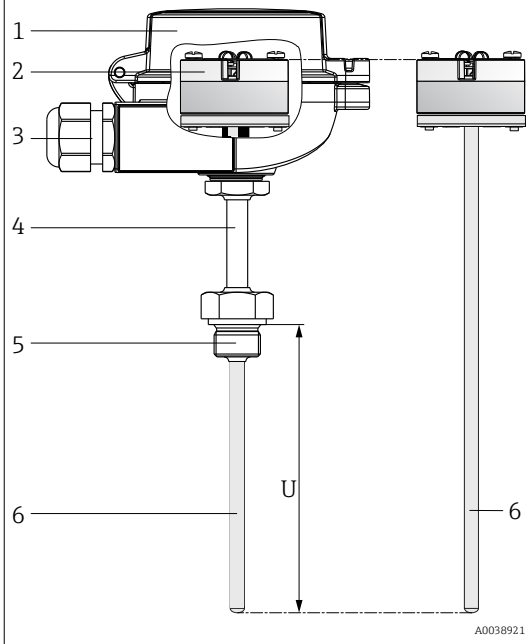	1: Terminal head	Variety of terminal heads made of aluminum **Your benefits:** ▪ Optimum terminal access thanks to low housing edge of bottom section: ▪ Easier to use ▪ Lower installation and maintenance costs ▪ Optional display: local process display for added reliability
	2: Wiring, electrical connection, output signal	▪ Ceramic terminal block ▪ Flying leads ▪ Head transmitter: 4 to 20 mA, HART®, IO-Link® ▪ Plug-in display
	3: Plug or cable gland	▪ Polyamide cable glands ▪ M12 plug, 4-pin: IO-Link®
	4: Lagging	Different options are available for the lagging ▪ Without extension (versions without fixed process connection) ▪ Defined extension (minimum available extension for fixed process connections) ▪ Extension welded in place (selectable lengths)
	5: Process connection	Variety of process connections including threads, cap nuts and compression fittings. With the exception of the compression fittings, the process connections are welded to the insert.
	6: Insert	The sheath of the insert is in direct contact with the process medium and does not have to be inserted into a thermowell. The sheath is welded to the process connection; therefore the insert is not replaceable. The version with a compression fitting is an exception: the insert can be replaced in this case. Sensor models: RTD thin-film sensor (TF) 1x Pt100 or 2x Pt100 Class B or A, 3- or 4-wire Thermocouple 1x Type K ungrounded class 2 according to IEC584-2 or standard according to ASTM E230-03

Input

Measured variable

Temperature (temperature-linear transmission behavior)

Measuring range

Depends on the type of sensor used

Sensor type	Measuring range
Pt100 thin film (TF), basic	−50 to +200 °C (−58 to +392 °F)
Pt100 thin film (TF), iTHERM QuickSens	−50 to +200 °C (−58 to +392 °F)
Pt100 thin film (TF), standard	−50 to +400 °C (−58 to +752 °F)
Pt100 thin film (TF), iTHERM StrongSens, vibration-resistant > 60 g	−50 to +500 °C (−58 to +932 °F)
Pt100 wire wound (WW), extended measuring range	−200 to +600 °C (−328 to +1 112 °F)
Thermocouple TC, type J	−40 to +750 °C (−40 to +1 382 °F)
Thermocouple TC, type K	−40 to +1 100 °C (−40 to +2 012 °F)
Thermocouple TC, type N	

Output

Output signal

Generally, the measured value can be transmitted in one of two ways:

- Directly-wired sensors - sensor measured values forwarded without a transmitter.
- Via all common protocols by selecting an appropriate Endress+Hauser iTEMP transmitter. All the transmitters listed below are mounted directly in the terminal head and wired with the sensory mechanism.

Family of temperature transmitters

Thermometers fitted with iTEMP transmitters are an installation-ready complete solution to improve temperature measurement by significantly increasing accuracy and reliability, when compared to direct wired sensors, as well as reducing both wiring and maintenance costs.

4 to 20 mA head transmitters
They offer a high degree of flexibility, thereby supporting universal application with low inventory storage. The iTEMP transmitters can be configured quickly and easily at a PC. Endress+Hauser offers free configuration software which can be downloaded from the Endress+Hauser Website. More information can be found in the Technical Information.

HART® head transmitters
The transmitter is a 2-wire device with one or two measuring inputs and one analog output. The device not only transfers converted signals from resistance thermometers and thermocouples, it also transfers resistance and voltage signals using HART® communication. Swift and easy operation, visualization and maintenance using universal device configuration tools like FieldCare, DeviceCare or FieldCommunicator 375/475. Integrated Bluetooth® interface for the wireless display of measured values and configuration via the Endress+Hauser SmartBlue app (optional). For more information, see the Technical Information.

Head transmitter with IO-Link ®
The temperature transmitter is an IO-Link® device with a measurement input and an IO-Link® interface. It offers a configurable, simple and cost-effective solution thanks to digital communication via IO-Link®. The device is mounted in a terminal head form B (flat face) as per DIN EN 5044.

Advantages of the iTEMP transmitters:
- Dual or single sensor input (optionally for certain transmitters)
- Pluggable display (optionally for certain transmitters)
- Unsurpassed reliability, accuracy and long-term stability in critical processes

- Mathematical functions
- Monitoring of the thermometer drift, sensor backup functionality, sensor diagnostic functions
- Sensor-transmitter matching based on Callendar/Van Dusen coefficients

Power supply

The sensor connection wires are equipped with terminal lugs. The nominal diameter of a lug is 1.3 mm (0.05 in)

Terminal assignment

RTD sensor connection type

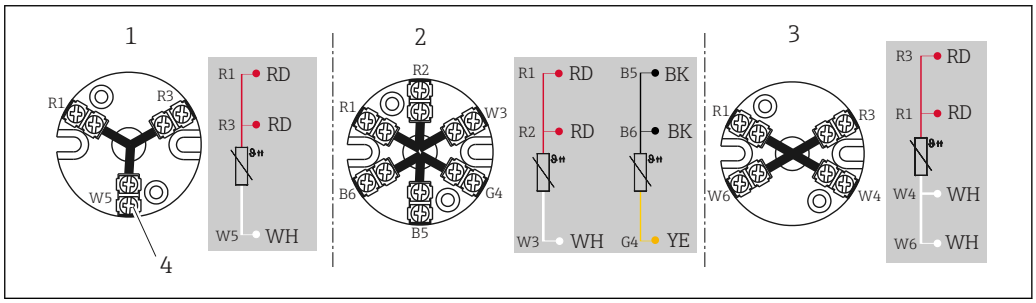

3 *Mounted ceramic terminal block*

1 *3-wire*
2 *2x3-wire*
3 *4-wire*
4 *Outside screw*

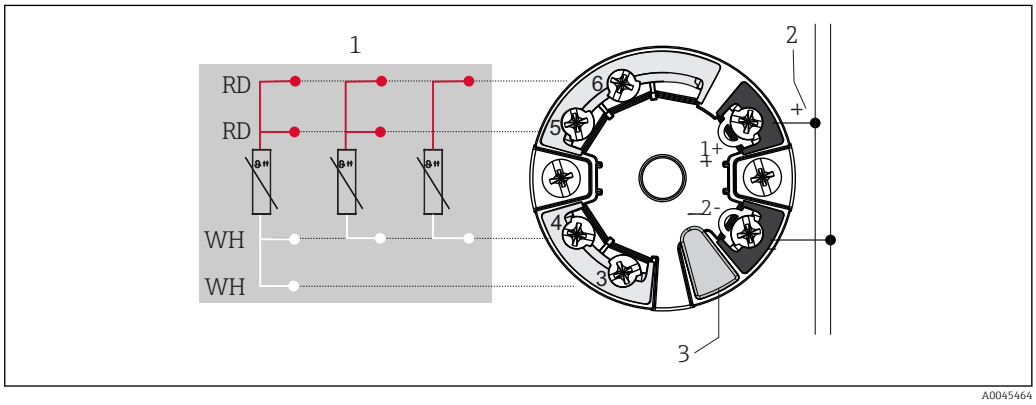

4 *Head-mounted iTEMP TMT7x transmitter or iTEMP TMT31 (single sensor input)*

1 *Sensor input, RTD, 4-, 3- and 2-wire*
2 *Power supply/bus connection*
3 *Display connection/CDI interface*

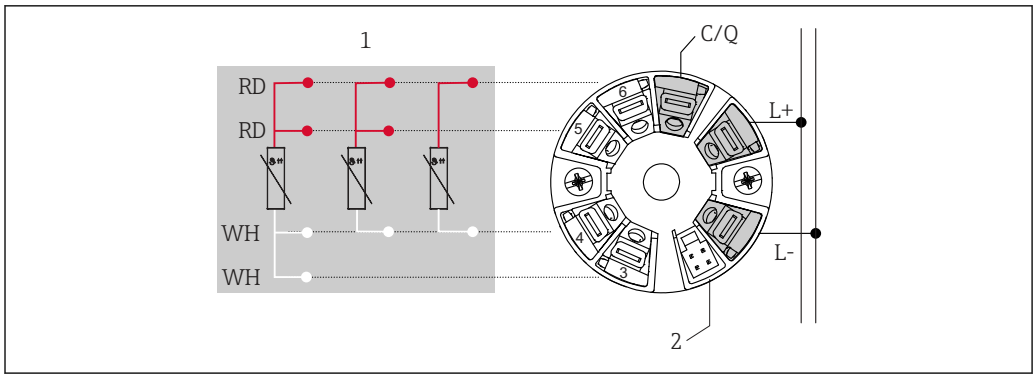

5 Head-mounted iTEMP TMT36 transmitter (single sensor input)

1 RTD sensor input: 4-, 3- and 2-wire
2 Display connection
L+ 18 to 30 V_{DC} power supply
L- 0 V_{DC} power supply
C/Q IO-Link or switch output

Thermocouple (TC) sensor connection type

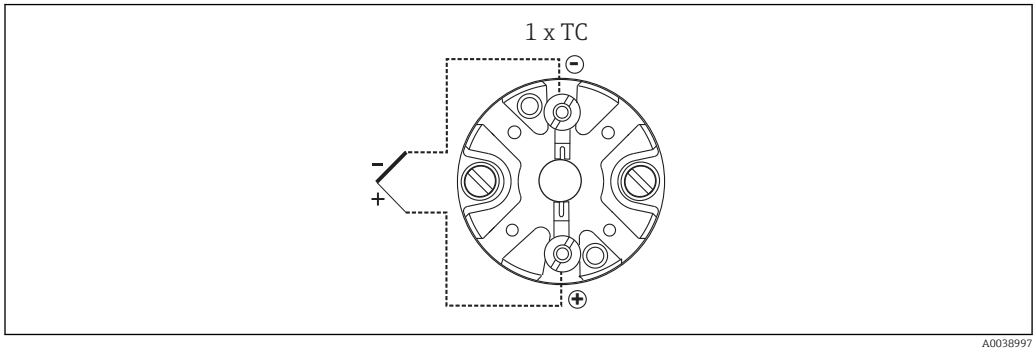

6 Mounted ceramic terminal block

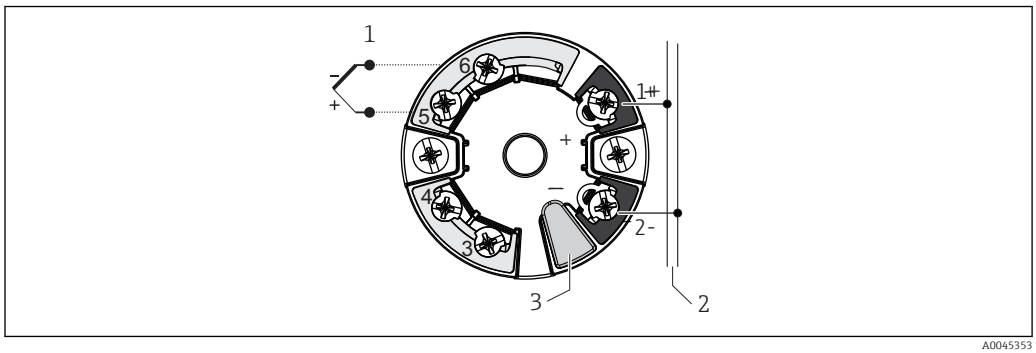

7 Head-mounted iTEMP TMT7x transmitter or iTEMP TMT31 (single sensor input)

1 Sensor input
2 Power supply and bus connection
3 Display connection and CDI interface

Thermocouple wire colors

As per IEC 60584	As per ASTM E230
▪ Type J: black (+), white (-) ▪ Type K: green (+), white (-) ▪ Type N: pink (+), white (-)	▪ Type J: white (+), red (-) ▪ Type K: yellow (+), red (-) ▪ Type N: orange (+), red (-)

Terminals

iTEMP head transmitters fitted with push-in terminals unless screw terminals are explicitly selected or a double sensor is installed.

Terminal design	Cable design	Cable cross-section
Screw terminals	Rigid or flexible	≤ 1.5 mm² (16 AWG)
Push-in terminals (cable version, stripping length = min. 10 mm (0.39 in)	Rigid or flexible	0.2 to 1.5 mm² (24 to 16 AWG)
	Flexible with ferrules (with or without plastic ferrule)	0.25 to 1.5 mm² (24 to 16 AWG)

Ferrules must be used with push-in terminals and when using flexible cables with a cable cross-section of ≤ 0.3 mm². Otherwise, the use of ferrules when connecting flexible cables to push-in terminals is not recommended.

Cable entries

See "Terminal heads" section

The cable entries must be selected during configuration of the device.

Device plug

The manufacturer offers a wide variety of device plugs for the simple and fast integration of the thermometer into a process control system. The following tables show the PIN assignments of the various plug connector combinations.

Abbreviations

#1	Order: first transmitter/insert	#2	Order: second transmitter/insert
i	Insulated. Wires marked 'i' are not connected and are insulated with heat shrink tubes.	YE	Yellow
GND	Grounded. Wires marked 'GND' are connected to the internal grounding screw in the terminal head.	RD	Red
BN	Brown	WH	White
GNYE	Green-yellow	PK	Pink
BU	Blue	GN	Green
GY	Gray	BK	Black

Terminal head with one cable entry

Plug				
Plug thread	M12			
PIN number	1	2	3	4
Electrical connection (terminal head)				
Flying leads, thermocouples are not connected	Not connected (not insulated)			
3-wire terminal block (1x Pt100)	RD	RD	WH	
4-wire terminal block (1x Pt100)			WH	WH
6-wire terminal block (2x Pt100)	RD (#1) [1]	RD (#1) [1]	WH (#1) [1]	
1x TMT 4 to 20 mA or HART®	+	i	-	i
2x TMT 4 to 20 mA or HART® in the terminal head with a high cover	+(#1)	+(#2)	-(#1)	-(#2)
PIN position and color code	 1 BN 2 GNYE 3 BU 4 GY A0018929			

1) Second Pt100 is not connected

Terminal head with one cable entry

Plug	1x IO-Link®, 4-pin			
Plug thread	M12			
PIN number	1	2	3	4
Electrical connection (terminal head)				
Flying leads	Not connected (not insulated)			
3-wire terminal block (1x Pt100)	RD	i	RD	WH
4-wire terminal block (1x Pt100)	Cannot be combined			
6-wire terminal block (2x Pt100)				
1x TMT 4 to 20 mA or HART®	Cannot be combined			
2x TMT 4 to 20 mA or HART® in the terminal head with a high cover				
1x TMT PROFIBUS® PA	Cannot be combined			
2x TMT PROFIBUS® PA				
1x TMT FF	Cannot be combined			
2x TMT FF				
1x TMT PROFINET®	Cannot be combined			
2x TMT PROFINET®				
1x TMT IO-Link®	L+	-	L-	C/Q
2x TMT IO-Link®	L+ (#1)	-	L- (#1)	C/Q
PIN position and color code	 1 BN 3 BU 4 BK A0055383			

Connection combination: insert - transmitter

Insert	Transmitter connection
	1x 1-channel
1x Pt100 or 1x TC, flying leads	Pt100 or TC (#1): Transmitter
2x Pt100 or 1x TC, flying leads	Pt100 (#1): Transmitter Pt100 (#2) insulated

Overvoltage protection

To protect against overvoltage in the power supply and signal/communication cables for the thermometer electronics, Endress+Hauser offers the HAW562 surge arrester for DIN rail mounting and the HAW569 for field housing installation.

For more information, see the Technical Information "HAW562 Surge arrester" TI01012K and "HAW569 Surge arrester" TI01013K.

Performance characteristics

Reference conditions

This data is relevant for determining the measurement accuracy of the iTEMP transmitters used. See technical documentation of the specific iTEMP transmitter.

Maximum measurement error

RTD resistance thermometer as per IEC 60751

Class	Max. tolerances (°C)	Characteristics
RTD maximum sensor error		
Cl. A	± (0.15 + 0.002 · |t| [1])	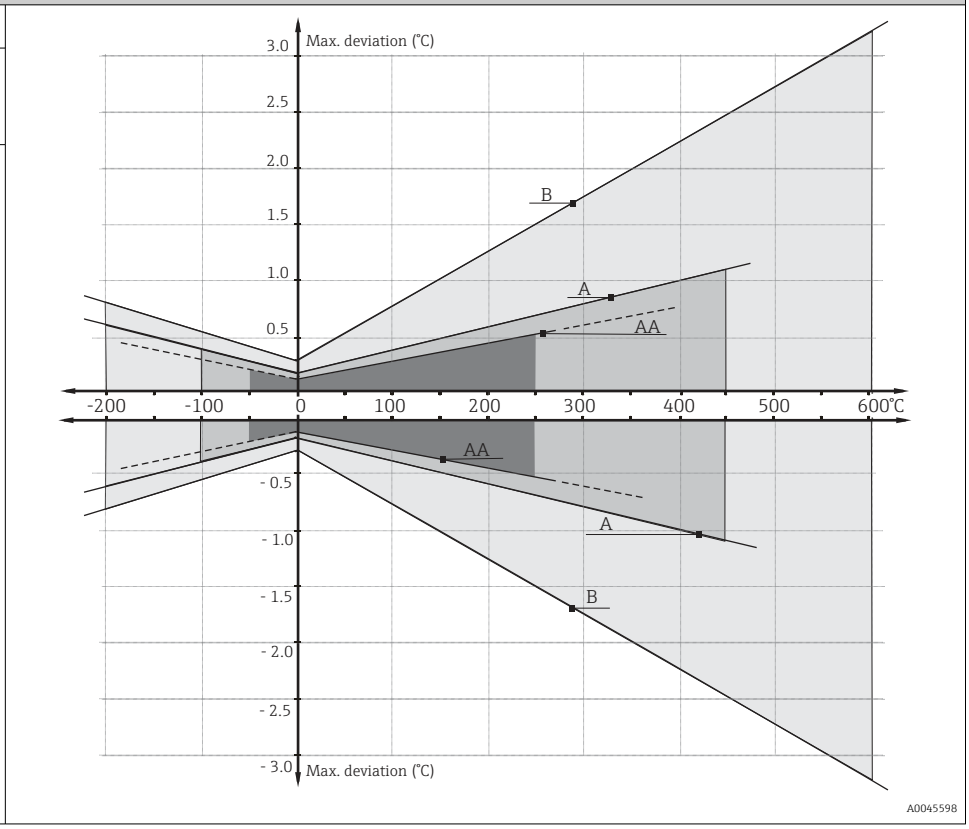
Cl. AA, previously 1/3 Cl. B	± (0.1 + 0.0017 · |t|) [1]	
Cl. B	± (0.3 + 0.005 · |t| [1])	

1) |t| = Temperature absolute value in °C

To obtain the maximum tolerances in °F, multiply the results in °C by a factor of 1.8.

Temperature ranges

Sensor type [1]	Operating temperature range	Class B	Class A	Class AA
Pt100 (WW)	−200 to +600 °C (−328 to +1 112 °F)	−200 to +600 °C (−328 to +1 112 °F)	−100 to +450 °C (−148 to +842 °F)	−50 to +250 °C (−58 to +482 °F)
Pt100 (TF) Basic	−50 to +200 °C (−58 to +392 °F)	−50 to +200 °C (−58 to +392 °F)	−30 to +200 °C (−22 to +392 °F)	-
Pt100 (TF) Standard	−50 to +400 °C (−58 to +752 °F)	−50 to +400 °C (−58 to +752 °F)	−30 to +250 °C (−22 to +482 °F)	0 to +150 °C (+32 to +302 °F)
Pt100 (TF) iTHERM QuickSens	−50 to +200 °C (−58 to +392 °F)	−50 to +200 °C (−58 to +392 °F)	−30 to +200 °C (−22 to +392 °F)	0 to +150 °C (+32 to +302 °F)
Pt100 (TF) iTHERM StrongSens	−50 to +500 °C (−58 to +932 °F)	−50 to +500 °C (−58 to +932 °F)	−30 to +300 °C (−22 to +572 °F)	0 to +150 °C (+32 to +302 °F)

1) Options depend on product and configuration

Permissible deviation limits of thermoelectric voltages from the standard characteristic for thermocouples as per IEC 60584 or ASTM E230/ANSI MC96.1:

Standard	Type	Standard tolerance		Special tolerance	
IEC 60584		Class	Deviation	Class	Deviation
	K (NiCr-NiAl)	2	±2.5 °C (−40 to 333 °C) ±0.0075 |t| (333 to 1200 °C)	1	±1.5 °C (−40 to 375 °C) ±0.004 |t| (375 to 1000 °C)

Standard	Type	Standard tolerance	Special tolerance
ASTM E230/ANSI MC96.1		Deviation; the larger value applies in each case	
	K (NiCr-NiAl)	±2.2 K or ±0.02 |t| (−200 to 0 °C) ±2.2 K or ±0.0075 |t| (0 to 1260 °C)	±1.1 K or ±0.004 |t| (0 to 1260 °C)

Influence of ambient temperature

Depends on the head transmitter used. For details, see the Technical Information.

Self-heating

RTD elements are passive resistors that are measured using an external current. This measurement current causes a self-heating effect in the RTD element itself which in turn creates an additional measurement error. In addition to the measurement current, the size of the measurement error is also affected by the temperature conductivity and flow velocity of the process. This self-heating error is negligible when an Endress+Hauser iTEMP temperature transmitter (very small measurement current) is connected.

Response time

Tests have been performed in water at 0.4 m/s (according to IEC 60751) and with a 10 K temperature change.

Standard Pt100, typical values	t_{50}	t_{90}
Direct contact: TF, WW 3 or 6 mm diameter	5 s	11 s

Type J, K, N (TC), typical values	t_{50}	t_{90}
Direct contact 3 or 6 mm diameter	2.5 s	7 s

Calibration

Calibration of thermometers

Calibration refers to the comparison between the display of a piece of measuring equipment and the true value of a variable provided by the calibration standard under defined conditions. The aim is to determine the deviation or measurement errors of the UUT from the true value of the measured variable. For thermometers, calibration is usually only performed on the inserts. This checks only the deviation of the sensor element caused by the insert design. However, in most applications, the deviations caused by the design of the measuring point, integration into the process, the influence of ambient conditions, and other factors are significantly greater than the deviations related to the insert. Calibration of inserts is generally carried out using two methods:

- Calibration at fixed points, e.g. at the freezing point of water at 0 °C,
- Calibration compared against a precise reference thermometer.

The thermometer to be calibrated must display either the fixed point temperature or the temperature of the reference thermometer as accurately as possible. Temperature-controlled calibration baths with very homogeneous thermal values, or special calibration furnaces are typically used for thermometer calibrations. The measurement uncertainty may increase due to heat conduction errors and short immersion lengths. The existing measurement uncertainty is recorded on the individual calibration certificate. For accredited calibrations in accordance with ISO 17025, a measurement uncertainty that is twice as high as the accredited measurement uncertainty is not permitted. If this limit is exceeded, only a factory calibration is possible.

Sensor-transmitter-matching

The resistance/temperature curve of platinum resistance thermometers is standardized but in practice it is rarely possible to keep to the values precisely over the entire operating temperature range. For this reason, platinum resistance sensors are divided into tolerance classes, such as Class

A, AA or B as per IEC 60751. These tolerance classes describe the maximum permissible deviation of the specific sensor characteristic curve from the standard curve, i.e. the maximum temperature-dependent characteristic error that is permitted. The conversion of measured sensor resistance values to temperatures in temperature transmitters or other meter electronics is often susceptible to considerable errors as the conversion is generally based on the standard characteristic curve.

When Endress+Hauser iTEMP temperature transmitters are used, this conversion error can be reduced significantly by sensor-transmitter-matching:
- Calibration at three temperatures at least and determination of the actual temperature sensor characteristic curve,
- Adjustment of the sensor-specific polynomial function using Calendar-van Dusen (CvD) coefficients
- Configuration of the temperature transmitter with the sensor-specific CvD coefficients for resistance/temperature conversion, and
- another calibration of the reconfigured temperature transmitter with connected resistance thermometer.

Endress+Hauser offers its customers this kind of sensor-transmitter matching as a separate service. Furthermore, the sensor-specific polynomial coefficients of platinum resistance thermometers are always provided on every Endress+Hauser calibration certificate where possible, e.g. at least three calibration points, so that users themselves can also appropriately configure suitable temperature transmitters.

For the device, Endress+Hauser offers standard calibrations at a reference temperature of −80 to +600 °C (−112 to +1 112 °F) based on the ITS90 (International Temperature Scale). Calibrations in other temperature ranges are available from an Endress+Hauser sales center on request. Calibrations are traceable to national and international standards. The calibration certificate is referenced to the serial number of the device. Only the insert is calibrated.

Minimum immersion length (IL) for inserts required to perform a correct calibration

Due to the limitations of furnace geometries, the minimum immersion lengths must be observed at high temperatures to enable a calibration to be performed with an acceptable degree of measurement uncertainty. The same applies when using a head transmitter. Due to heat conduction, minimum lengths must be observed in order to guarantee the functionality of the transmitter −40 to +85 °C (−40 to +185 °F).

Calibration temperature	Minimum immersion length IL in mm without head transmitter
−196 °C (−320.8 °F)	120 mm (4.72 in) [1]
−80 to +250 °C (−112 to +482 °F)	No minimum immersion length required [2]
+251 to +550 °C (+483.8 to +1 022 °F)	300 mm (11.81 in)
+551 to +600 °C (+1 023.8 to +1 112 °F)	400 mm (15.75 in)

1) With iTEMP head transmitter min. 150 mm (5.91 in) is required
2) at a temperature of +80 to +250 °C (+176 to +482 °F), the iTEMP head transmitter requires min. 50 mm (1.97 in)

Insulation resistance

- RTD:
  Insulation resistance between the terminals and the extension neck, as per IEC 60751 > 100 MΩ at +25 °C, measured with a minimum testing voltage of 100 V DC
- TC:
  Insulation resistance as per IEC 61515 between terminals and sheath material for a test voltage of 500 V DC:
  - > 1 GΩ at +20 °C
  - > 5 MΩ at +500 °C

Installation

Orientation

No restrictions. However, self-draining in the process should be guaranteed depending on the application.

Installation instructions

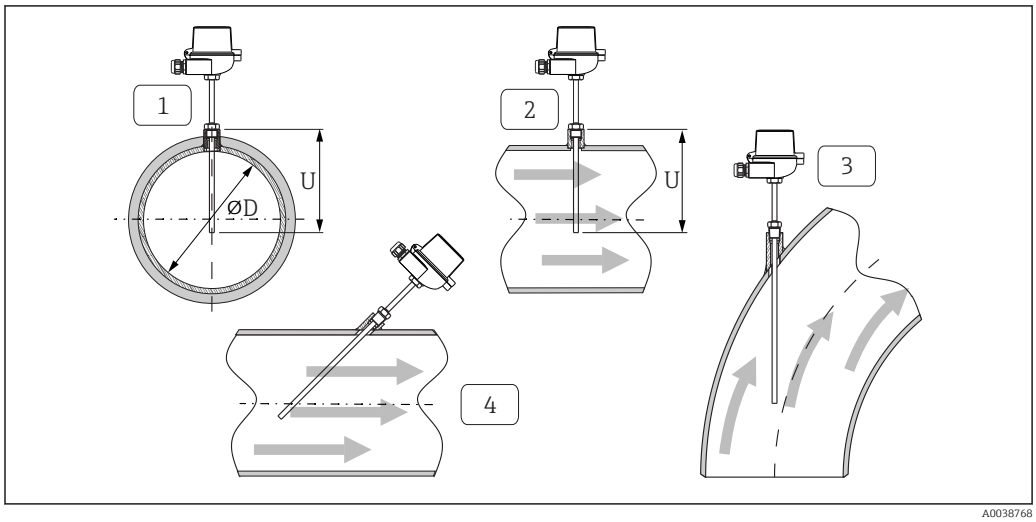

8 Installation examples

1 - 2 In pipes with a small cross-section, the sensor tip should reach or extend slightly past the center axis of the pipe (=U).
3 - 4 Slanted orientation.

The immersion length of the thermometer influences the measurement accuracy. If the immersion length is too small, measurement errors are caused by heat conduction via the process connection and the container wall. If installing into a pipe then the immersion length should be at least half of the pipe diameter. Installation at an angle (see item 3 and 4) could be another solution. When determining the immersion length, all the parameters of the thermometer and of the process to be measured must be taken into account (e.g. flow velocity, process pressure).

The counterparts for process connections and seals are not supplied with the thermometer and must be ordered separately if needed.

Possible bending radius

Sensor type [1]	**Diameter ID**	**Bending radius R**	**Non-bendable length (tip) NL** [2]
Pt100 (TF) standard	Ø6 mm (0.24 in)	Non-bendable	Non-bendable
Pt100 (TF) iTHERM StrongSens	Ø6 mm (0.24 in)	R ≥ 3 x ID	30 mm (1.18 in)
Pt100 (TF) iTHERM QuickSens	Ø3 mm (0.12 in)	Non-bendable	Non-bendable
	Ø6 mm (0.24 in)	R ≥ 3 x ID	30 mm (1.18 in)
Pt100 (WW)	Ø3 mm (0.12 in)	R ≥ 3 x ID	30 mm (1.18 in)
	Ø6 mm (0.24 in)		
	Ø6.35 mm (¼ in)		
Pt100 (TF) basic	Ø6 mm (0.24 in)	Non-bendable	Non-bendable
	Ø6.35 mm (¼ in)		
Thermocouple types J, K, N	Ø3 mm (0.12 in)	R ≥ 3 x ID	30 mm (1.18 in)
	Ø6 mm (0.24 in)		
	Ø6.35 mm (¼ in)		

1) Options depend on product and configuration
2) If a sleeve is overlapped, NL increases to 80 mm.

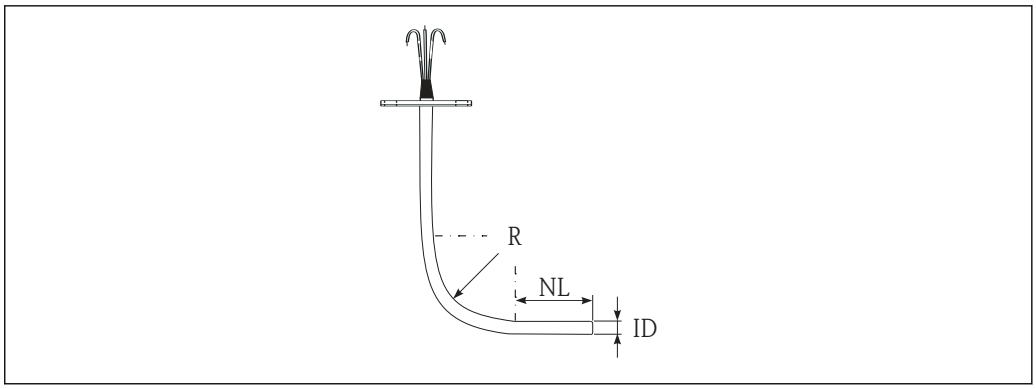

A0019386

Environment

Ambient temperature range

Terminal head	Temperature in °C (°F)
Without mounted head transmitter	Depends on the terminal head used and the cable gland or fieldbus connector; see "Terminal heads" section.
With mounted iTEMP head transmitter	−40 to +85 °C (−40 to +185 °F)
With mounted iTEMP head transmitter and display	−30 to +85 °C (−22 to 185 °F)

Storage temperature

−40 to +85 °C (−40 to +185 °F).

Humidity

Depends on the iTEMP transmitter used. When using iTEMP head transmitters:
- Condensation permitted as per IEC 60068-2-33
- Max. relative humidity: 95% in accordance with IEC 60068-2-30

Climate class

As per EN 60654-1, Class C

Degree of protection

Max. IP 66 (NEMA Type 4x encl.)	Depending on the design (terminal head, connector, etc.)
Partly IP 68	Tested in 1.83 m (6 ft) over 24 h

Shock and vibration resistance

The Endress+Hauser inserts exceed the requirements of IEC 60751 with regard to shock and vibration resistance of 3g in a range of 10 to 500 Hz. The vibration resistance of the measuring point depends on sensor type and design:

Sensor type [1]	Vibration resistance for the sensor tip
Pt100 (WW)	≤ 30 m/s² (≤ 3g)
Pt100 (TF) Basic	
Pt100 (TF) Standard	≤ 40 m/s² (≤ 4g)
Pt100 (TF) iTHERM StrongSens	600 m/s² (60g)
Pt100 (TF) iTHERM QuickSens, version: ø6 mm (0.24 in)	600 m/s² (60g)
Pt100 (TF) iTHERM QuickSens, version: ø3 mm (0.12 in)	≤ 30 m/s² (≤ 3g)
Thermocouple TC, type J, K, N	≤ 30 m/s² (≤ 3g)

1) Options depend on product and configuration

Electromagnetic compatibility (EMC)

Electromagnetic compatibility in accordance with all the relevant requirements of the IEC/EN 61326 series and NAMUR Recommendation EMC (NE21). For details refer to the EU Declaration of Conformity.

Maximum measurement error < 1% of the measuring range.

Interference immunity as per IEC/EN 61326 series, industrial requirements

Interference emission as per IEC/EN 61326 series, Class B equipment

Process

Process temperature range

Depends on the type of sensor and the material used, max. −200 to +1 100 °C (−328 to +2 012 °F)..

Process pressure range

$P_{max.}$ = 50 bar (725 psi)

The maximum possible process pressure depends on various influencing factors, such as design, process connection and process temperature. For information on the maximum possible process pressures for the individual process connections, see the "Process connection" section.

Mechanical construction

Design, dimensions

All dimensions in mm (in). The design of the thermometer depends on the general design version used.

Various dimensions, such as the immersion length U for example, are variable values and are therefore indicated as items in the following dimensional drawings.

Variable dimensions:

Item	Description
IL	Insertion length of insert
L	Thermowell length L = total length (U+T)
T	Length of lagging: variable or predefined, depends on design (see also the individual table data)
U	Immersion length: variable, depending on the configuration
	1 M24x1.5 2 NPT ½“ 3 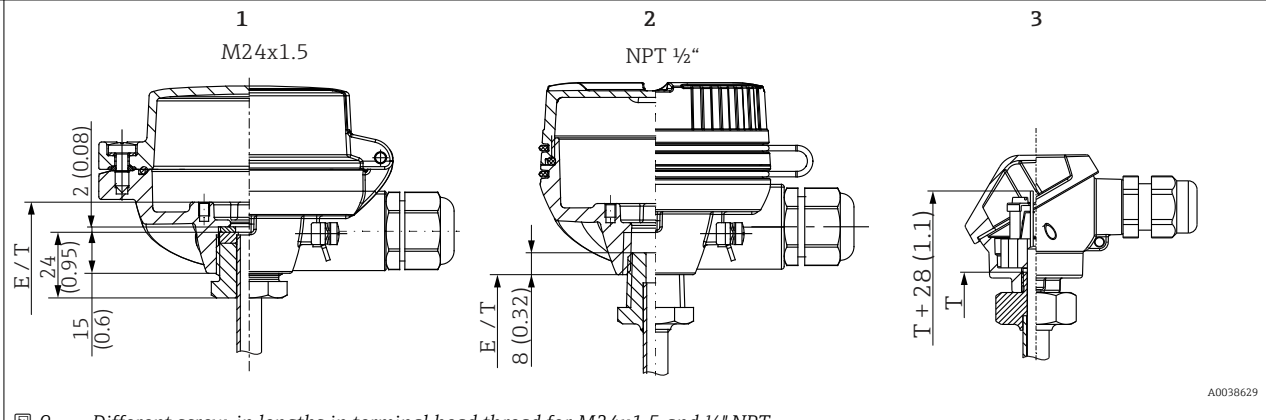 *9 Different screw-in lengths in terminal head thread for M24x1.5 and ½" NPT* *1 Metric thread M24x1.5 for TA30 and TA20EB* *2 Conical thread NPT ½" for TA30EB* *3 M10x1 adapter for Mignon terminal head*
Ø ID	Insert diameter: 6 mm (0.24 in)

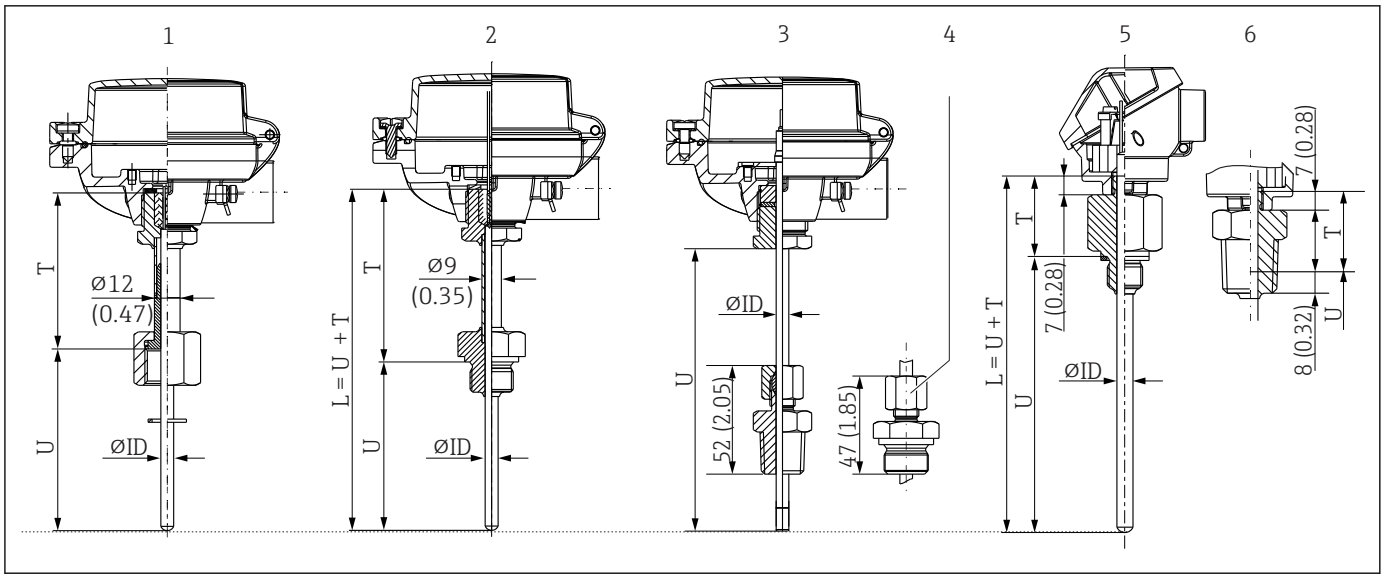

1 With lagging and cap nut, female thread, available in G½" and G¼" type
2 With lagging
3 With compression fitting ½" NPT thread, spring loaded version as option
4 Compression fitting G½"
5 Without lagging, terminal head (Mignon head) process connection, metric thread version
6 Without lagging, terminal head process connection, ½" NPT thread version

Minimum length definition

Thermometer version	U	T
1	≥ 30 mm (1.18 in)	≥ 85 mm (3.35 in)
2		
3 + 4	≥ 70 mm (2.76 in)	-
5 + 6	≥ 30 mm (1.18 in)	Length is predefined by design: ▪ 38 mm (1.5 in) ▪ 30 mm (1.18 in), if Mignon terminal head is used

The insert can be replaced in version 3 (4). Calculation of insert length: IL = U + 39 mm (15.4 in). The insert cannot be replaced in all other versions.

As illustrated in the following figure, the lagging length may influence the temperature in the terminal head. This temperature must remain within the limit values defined in the "Environment" section.

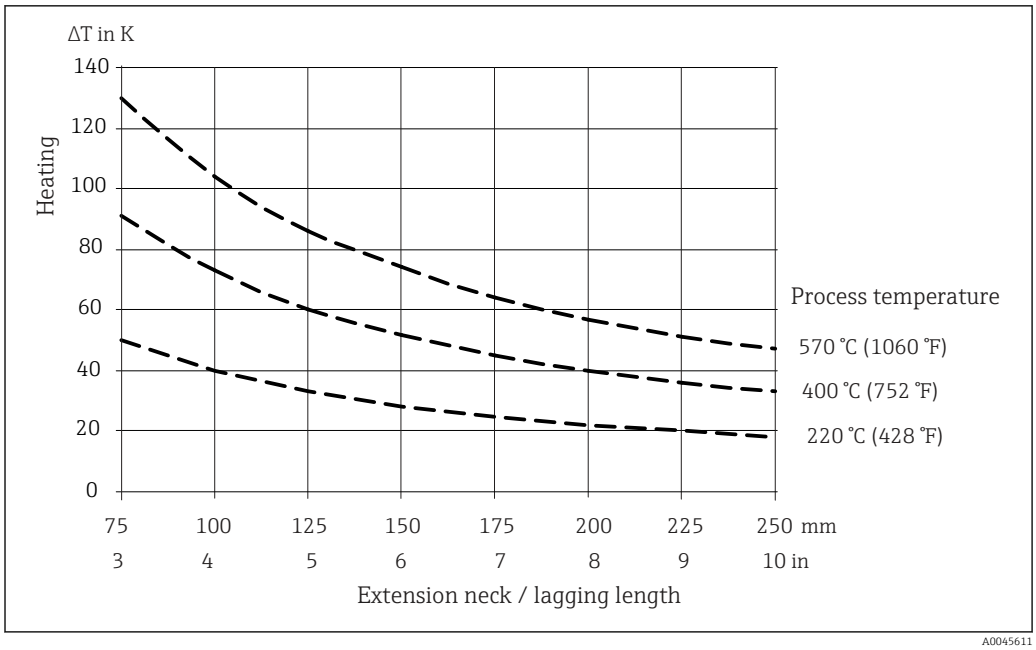

10 Heating of the terminal head as a function of the process temperature. Temperature in terminal head = ambient temperature 20 °C (68 °F)+ ΔT

The diagram can be used to calculate the transmitter temperature.

Example: At a process temperature of 220 °C (428 °F) and with an overall lagging and extension neck length of 100 mm (3.94 in), the heat conduction is 40 K (72 °F). The determined transmitter temperature is less than 85 °C(maximum ambient temperature for iTEMP temperature transmitter).

Result: The temperature of the transmitter is OK; the length of the lagging is sufficient.

Weight

1 to 2.5 kg (2.2 to 48.5 lbs) for standard versions

Material

The temperatures for continuous operation specified in the following table are only intended as reference values for use of the various materials in air and without any significant mechanical load. The maximum operating temperatures can be reduced considerably in cases where abnormal conditions such as high mechanical load occur or in aggressive media.

Please note that the maximum temperature also always depends on the temperature sensor used!

Material name	Short form	Recommended max. temperature for continuous use in air	Properties
AISI 316L/1.4404 1.4435	X2CrNiMo17-12-2 X2CrNiMo18-14-3	650 °C (1 202 °F)	▪ Austenitic, stainless steel ▪ High corrosion resistance in general ▪ Particularly high corrosion-resistance in chlorinated and acidic, non-oxidizing atmospheres by adding molybdenum (e.g. phosphoric and sulfuric acids, acetic and tartaric acids with low concentration) ▪ Increased resistance to intergranular corrosion and pitting ▪ Compared to 1.4404, 1.4435 has even higher corrosion resistance and a lower delta ferrite content
Alloy600/2.4816	NiCr15Fe	1 100 °C (2 012 °F)	▪ A nickel/chromium alloy with very good resistance to aggressive, oxidizing and reducing atmospheres, even at high temperatures ▪ Resistance to corrosion caused by chlorine gases and chlorinated media as well as many oxidizing mineral and organic acids, sea water etc. ▪ Corrosion from ultrapure water ▪ Not to be used in sulfur-containing atmospheres

Process connections

Process connections with a cylindrical male thread are supplied with copper seals according to DIN 7603 A with a thickness of 1.5 mm.

Threaded process connection

Type	Type of fitting		Dimensions		Technical properties
			Thread length TL in mm (in)	Width across flats AF	
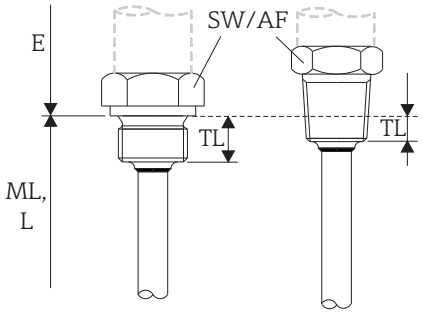	M	M20x1.5	14 mm (0.55 in)	27	Maximum static process pressure for threaded process connection: [1] 400 bar (5 802 psi) at +400 °C (+752 °F)
		M18x1.5	12 mm (0.47 in)	24	
	G	G ½"	15 mm (0.6 in)	27	
		G ¼"	12 mm (0.47 in)	24	
	NPT	NPT ½"	8 mm (0.32 in)	22	

11 Cylindrical (left side) and conical (right side) version

1) Maximum pressure specifications only for the thread. The failure of the thread is calculated, taking the static pressure into consideration. The calculation is based on a fully tightened thread (TL = thread length)

Connection thread Cap nut [1]	Type of fitting	Thread length TL	Width across flats	
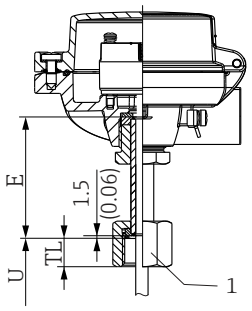 *1 Cap nut thread*	G½"	15.5 mm (0.61 in)	27 mm (1.06 in)	The cap nuts are not designed as process connections. This connection is only available for thermometers without a thermowell.
	G¾"	19.5 mm (0.77 in)	32 mm (1.26 in)	

1) For selection without thermowell. Only available for installation in an existing thermowell. Special attention has to be paid to the length as the insert is not spring-loaded!

The 316L compression fittings can only be used once due to deformation. This applies to all the components of the compression fittings! A replacement compression fitting must be secured at another point (grooves in thermowell). PEEK compression fittings must never be used at a temperature that is lower than the temperature present when the compression fitting is secured. This is because the fitting would no longer be leak-tight as a result of heat contraction of the PEEK material.

SWAGELOCK or similar fittings are strongly recommended for higher requirements.

Compression fitting

Type TK40	Type of fitting	Dimensions		Technical properties
		ø di	Width across flats	
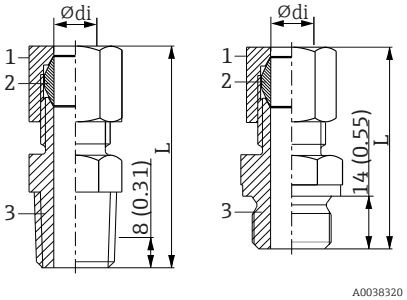 *1 Nut* *2 Ferrule* *3 Process connection*	NPT ½", L = approx. 52 mm (2.05 in) G ½", L = approx. 47 mm (1.85 in) Ferrule material PEEK or 316L Tightening torque: ▪ 10 Nm (PEEK) ▪ 25 Nm (316L)	3 mm (0.12 in) or 6 mm (0.24 in)	G½": 27 mm (1.06 in) ½" NPT: 24 mm (0.95 in)	▪ $P_{max.}$ = 5 bar (72.5 psi), at T = +180 °C (+356 °F) for PEEK material ▪ $P_{max.}$ = 40 bar (104 psi) at T = +200 °C (+392 °F) for 316L material ▪ $P_{max.}$ = 25 bar (77 psi) at T = +400 °C (+752 °F) for 316L material
Spring-loaded version as option				
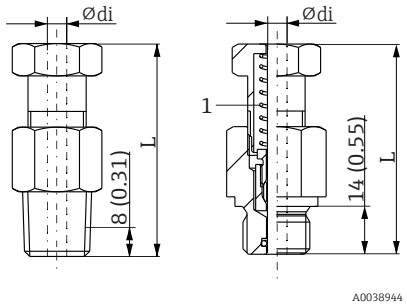 *1 Spring*	G½" or NPT ½", spring-loaded, L = approx. 60 mm (2.36 in)	6 mm (0.24 in)	G½": 27 mm (1.06 in) ½" NPT: 24 mm (0.95 in)	It is not pressure tight. Only to be used in combination with thermowell or in medium air. Tightening torque: ▪ G½": 40 Nm ▪ ½" NPT: 55 Nm

Inserts

The device has a non-replaceable insert. The sheath is welded to the process connection to ensure a leak-tight condition. [1)]

Sensor	Standard thin-film
Sensor design; connection method	1x or 2x Pt100, 3- or 4-wire, basic version, stainless steel sheath
Vibration resistance of the insert tip	Up to 3g
Measuring range; accuracy class	−50 to +200 °C (−58 to +392 °F), Class A or B
Diameter	6 mm (0.24 in)

TC thermocouples	Type K
Sensor design	Mineral insulated, alloy 600 sheathed TC cable
Vibration resistance of the insert tip	Up to 3g
Measuring range	−270 to +1 100 °C (−454 to +2 012 °F)
Connection type	Ungrounded hot junction
Temperature-sensitive length	Insert length
Diameter	6 mm (0.24 in)

Surface roughness

Values for wetted surfaces:

Standard surface	$R_a \leq$ 1.6 µm (0.06 µin)

Terminal heads

All terminal heads have an internal shape and size in accordance with DIN EN 50446, flat face, and a thermometer connection with a M24x1.5 or ½" NPT thread. All dimensions in mm (in). The sample cable glands in the diagrams correspond to M20x1.5 connections with non-Ex polyamide cable glands. Specifications without head transmitter installed. For ambient temperatures with head transmitter installed, see the "Environment" section.

As a special feature, Endress+Hauser offers terminal heads with optimized terminal accessibility for easy installation and maintenance.

TA20AB	Specification
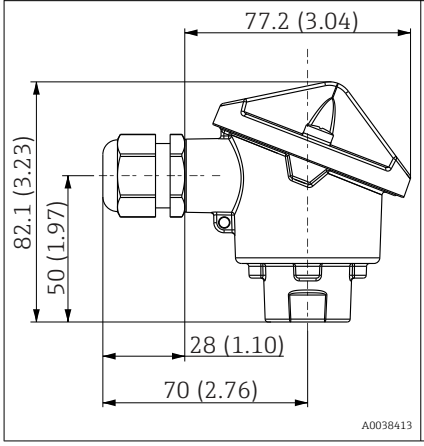	▪ Protection class: IP 66/68, NEMA 4x ▪ Temperature: −40 to +100 °C (−40 to +212 °F), polyamide cable gland ▪ Material: aluminum; polyester powder coated Seals: silicone ▪ Threaded cable entry: NPT ½" and M20x1.5 ▪ Color: blue, RAL 5012 ▪ Weight: approx. 300 g (10.6 oz)

1) Compression fittings are an exception: the insert can be replaced in this case.

TA30A with display window in cover	Specification
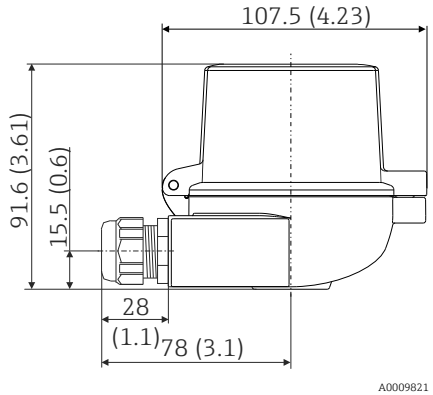	▪ Protection degree: ▪ IP66/68 (NEMA Type 4x encl.) ▪ For ATEX: IP66/67 ▪ Temperature: −50 to +150 °C (−58 to +302 °F) without cable gland ▪ Material: aluminum, polyester powder coated Seals: silicone ▪ Threaded cable entry: G ½", NPT ½" and M20x1.5 ▪ Head color: blue, RAL 5012 Cap color: gray, RAL 7035 ▪ Weight: 420 g (14.81 oz) ▪ Display window: single-pane safety glass according to DIN 8902 ▪ Display window in cover for head transmitter with TID10 display ▪ Ground terminal, internal and external ▪ Available with sensors with 3-A® symbol

TA30EB	Specification
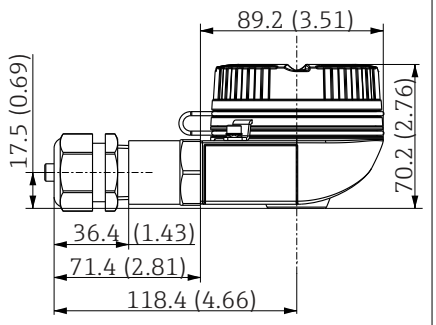	▪ Screw cap ▪ Degree of protection: IP 66/68, NEMA 4x ▪ Temperature: −50 to +150 °C (−58 to +302 °F) ▪ Material: aluminum; polyester powder coating; Klüber Syntheso Glep 1 dry-film lubricant ▪ Thread: M20x1.5 ▪ Head color: blue, RAL 5012 ▪ Cap color: gray, RAL 7035 ▪ Weight: approx. 400 g (14.11 oz) ▪ Ground terminal: internal and external When the housing cover is unscrewed: Before fastening, clean the threads in the cover and on the lower part of the housing and lubricate if necessary (recommended lubricant: Klüber Syntheso Glep 1)

TA20L Mignon	Specification
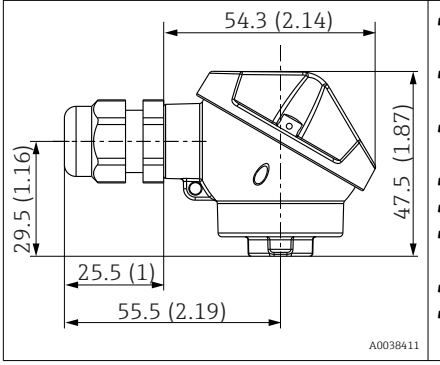	▪ Protection class: IP66 ▪ Temperature: −50 to +150 °C (−58 to +302 °F) without cable gland ▪ Material: aluminum, polyester powder coated Seals: silicone ▪ Threaded cable entry: M16x1.5 ▪ Protection armature connection: M10x1 ▪ Head color: blue, RAL 5012 Cap color: gray, RAL 7035 ▪ Weight: 420 g (14.81 oz) ▪ No ground terminal

Cable glands and connectors [1)]

Type	Suitable for cable entry	Degree of protection	Temperature range	Suitable cable diameter
Cable gland, polyamide blue (indication of Ex-i circuit)	½" NPT	IP68	−30 to +95 °C (−22 to +203 °F)	7 to 12 mm (0.27 to 0.47 in)
Cable gland, polyamide	½" NPT, ¾" NPT, M20x1.5 (optionally 2x cable entry)	IP68	−40 to +100 °C (−40 to +212 °F)	5 to 9 mm (0.19 to 0.35 in)
	½" NPT, M20x1.5 (optionally 2x cable entry)	IP69K	−20 to +95 °C (−4 to +203 °F)	
Cable gland for dust ignition-proof area, polyamide	½" NPT, M20x1.5	IP68	−20 to +95 °C (−4 to +203 °F)	
Cable gland for dust ignition-proof area, nickel-plated brass	M20x1.5	IP68 (NEMA Type 4x)	−20 to +130 °C (−4 to +266 °F)	
M12 plug, 4-pin, 316 (PROFIBUS® PA, Ethernet-APL™, IO-Link®)	½" NPT, M20x1.5	IP67	−40 to +105 °C (−40 to +221 °F)	-
M12 plug, 8-pin, 316	M20x1.5	IP67	−30 to +90 °C (−22 to +194 °F)	-
7/8" plug, 4-pin, 316 (FOUNDATION ™ Fieldbus, PROFIBUS® PA)	½" NPT, M20x1.5	IP67	−40 to +105 °C (−40 to +221 °F)	-

1) Depending on product and configuration

Cable glands are not available for encapsulated, flameproof thermometers.

Certificates and approvals

Current certificates and approvals for the product are available at www.endress.com on the relevant product page:

1. Select the product using the filters and search field.
2. Open the product page.
3. Select **Downloads**.

Ordering information

Detailed ordering information is available from your nearest sales organization www.addresses.endress.com or in the Product Configurator at www.endress.com:

1. Select the product using the filters and search field.
2. Open the product page.
3. Select **Configuration**.

Product Configurator - the tool for individual product configuration

- Up-to-the-minute configuration data
- Depending on the device: direct input of information specific to the measuring point, such as the measuring range or operating language
- Automatic verification of exclusion criteria
- Automatic creation of the order code and its breakdown in PDF or Excel output format
- Ability to order directly in the Endress+Hauser Online Shop

Accessories

The accessories currently available for the product can be selected at www.endress.com:

1. Select the product using the filters and search field.
2. Open the product page.
3. Select **Spare parts & Accessories**.

Service-specific accessories

DeviceCare SFE100
DeviceCare is an Endress+Hauser configuration tool for field devices using the following communication protocols: HART, PROFIBUS DP/PA, FOUNDATION Fieldbus, IO/Link, Modbus, CDI and Endress+Hauser Common Data Interfaces.

Technical Information TI01134S

www.endress.com/sfe100

FieldCare SFE500
FieldCare is a configuration tool for Endress+Hauser and third-party field devices based on DTM technology.
The following communication protocols are supported: HART, WirelessHART, PROFIBUS, FOUNDATION Fieldbus, Modbus, IO-Link, EtherNet/IP, PROFINET and PROFINET APL.

Technical Information TI00028S

www.endress.com/sfe500

Netilion
With the Netilion lIoT ecosystem, Endress+Hauser enables the optimization of plant performance, digitization of workflows, sharing of knowledge and improved collaboration. Drawing upon decades of experience in process automation, Endress+Hauser offers the process industry an IIoT ecosystem designed to effortlessly extract insights from data. These insights allow process optimization, leading to increased plant availability, efficiency, reliability and ultimately a more profitable plant.

www.netilion.endress.com

SmartBlue app
SmartBlue from Endress+Hauser allows easy wireless field device configuration via Bluetooth® or WLAN. By providing mobile access to diagnostic and process information, SmartBlue saves time, even in hazardous and difficult-to-access environments.

ANDROID APP ON Google Play
Download on the App Store

A0033202

12 QR code for free Endress+Hauser SmartBlue app

Online tools

Product information over the entire life cycle of the device: www.endress.com/onlinetools

System components

Surge arrester modules from the HAW product family

Surge arrester modules for DIN rail and field device mounting, for the protection of plants and measuring instruments with power supply and signal/communication lines.

More detailed information: www.endress.com

Process indicators from the RIA product family

Easily readable process indicators with various functions: loop-powered indicators for displaying 4 to 20 mAvalues, display of up to four HART variables, process indicators with control units, limit value monitoring, sensor power supply, and galvanic isolation.

Universal application thanks to international hazardous area approvals, suitable for panel mounting or field installation..

For more information, please refer to: www.endress.com

RN series active barrier

Single- or two-channel active barrier for safe separation of 0/4 to 20 mA standard signal circuits with bidirectional HART transmission. In the signal duplicator option, the input signal is transmitted to two galvanically isolated outputs. The device has one active and one passive current input; the outputs can be operated actively or passively.

For more information, please refer to: www.endress.com

Documentation

The following document types are available in the Downloads area of the Endress+Hauser website (www.endress.com/downloads), depending on the device version:

Document type	Purpose and content of the document
Technical Information (TI)	**Planning aid for your device** The document contains all the technical data on the device and provides an overview of the accessories and other products that can be ordered for the device.
Brief Operating Instructions (KA)	**Guide that takes you quickly to the 1st measured value** The Brief Operating Instructions contain all the essential information from incoming acceptance to initial commissioning.
Operating Instructions (BA)	**Your reference document** The Operating Instructions contain all the information that is required in various phases of the life cycle of the device: from product identification, incoming acceptance and storage, to mounting, connection, operation and commissioning through to troubleshooting, maintenance and disposal.
Description of Device Parameters (GP)	**Reference for your parameters** The document provides a detailed explanation of each individual parameter. The description is aimed at those who work with the device over the entire life cycle and perform specific configurations.
Safety instructions (XA)	Depending on the approval, safety instructions for electrical equipment in hazardous areas are also supplied with the device. These are an integral part of the Operating Instructions. The nameplate indicates which Safety Instructions (XA) apply to the device.
Supplementary device-dependent documentation (SD/FY)	Always comply strictly with the instructions in the relevant supplementary documentation. The supplementary documentation is a constituent part of the device documentation.



www.addresses.endress.com

Endress+Hauser

People for Process Automation