TI01414D/06/EN/05.25-00
71711363
2025-11-11

Technical Information
Proline Promag W 300

Electromagnetic flowmeter



Specialist for demanding water and wastewater applications with a compact, easily accessible transmitter

Application

- The bidirectional measuring principle is virtually independent of pressure, density, temperature and viscosity
- Suitable for elementary measurement tasks such as raw water intake

Device properties

- International drinking water approvals
- Degree of protection IP68 (Type 6P enclosure)
- Compact dual-compartment housing with up to 3 I/Os
- Backlit display with touch control and WLAN access
- Remote display available

Your benefits

- Reliable measurement at constant accuracy with 0 x DN inlet run and no pressure loss
- Flexible engineering – sensor with fixed or lap-joint process connections
- Long-term operation – robust and completely welded sensor
- Improved plant availability – sensor compliant with industry-specific requirements
- Full access to process and diagnostic information – numerous, freely combinable I/Os and Ethernet
- Reduced complexity and variety – freely configurable I/O functionality
- Integrated verification – Heartbeat Technology

Endress+Hauser
People for Process Automation

Table of contents

About this document 4
Symbols 4

Function and system design 5
Measuring principle 5
Measuring system 6
Equipment architecture 7
Reliability 7

Input 9
Measured variable 9
Measuring range 10
Operable flow range 14
Input signal 14

Output 16
Output and input variants 16
Output signal 18
Signal on alarm 24
Load 26
Ex connection data 27
Low flow cut off 29
Galvanic isolation 29
Protocol-specific data 29

Power supply 37
Terminal assignment 37
Available device plugs 38
Supply voltage 40
Power consumption 40
Current consumption 40
Power supply failure 40
Overcurrent protection element 40
Electrical connection 40
Potential equalization 46
Terminals 50
Cable entries 50
Pin assignment, device plug 51
Cable specification 53
Overvoltage protection 55

Performance characteristics 55
Reference operating conditions 55
Maximum measurement error 55
Repeatability 57
Influence of ambient temperature 57

Installation 58
Mounting location 58
Orientation 60
Inlet and outlet runs 61
Adapters 63
Special installation instructions 64

Environment 64
Ambient temperature range 64
Storage temperature 65
Relative humidity 65
Operating height 65
Degree of protection 65
Vibration-resistance and shock resistance 65
Mechanical load 65
Electromagnetic compatibility (EMC) 66

Process 66
Medium temperature range 66
Conductivity 66
Pressure-temperature ratings 66
Pressure tightness 69
Flow limit 70
Pressure loss 70
System pressure 70
Thermal insulation 71
Vibrations 71
Magnetism and static electricity 71

Custody transfer 72

Mechanical construction 72
Dimensions in SI units 72
Dimensions in US units 88
Weight 98
Measuring tube specification in SI units 102
Measuring tube specification in US units 103
Materials 104
Fitted electrodes 107
Process connections 107
Surface roughness 107

Display and user interface 108
Operation concept 108
Languages 108
Onsite operation 108
Remote operation 109
Service interface 116
Network integration 117
Supported operating tools 118
HistoROM data management 119

Certificates and approvals 121
CE mark 121
UKCA marking 121
RCM marking 121
Ex-approval 121
Drinking water approval 121
HART certification 121
FOUNDATION Fieldbus certification 122
Certification PROFIBUS 122
EtherNet/IP certification 122
Certification PROFINET 122
PROFINET over Ethernet-APL certification 122
Radio approval 122
External standards and guidelines 122

Ordering information 123

Application packages 123
Diagnostic functionality 123
Heartbeat Technology 123
Cleaning 124
OPC-UA Server 124

Accessories 124
Device-specific accessories 124
Communication-specific accessories 125
Service-specific accessories 126
System components 127

Documentation 127
Standard documentation 127
Supplementary device-dependent documentation 128

Registered trademarks 129

About this document

Symbols

Electrical symbols

Symbol	Meaning
	Direct current
	Alternating current
	Direct current and alternating current
	**Ground connection** A grounded terminal which, as far as the operator is concerned, is grounded via a grounding system.
	**Protective earth (PE)** Ground terminals that must be connected to ground prior to establishing any other connections. The ground terminals are located on the interior and exterior of the device: ▪ Interior ground terminal: protective earth is connected to the mains supply. ▪ Exterior ground terminal: device is connected to the plant grounding system.

Communication-specific symbols

Symbol	Meaning
	**Wireless Local Area Network (WLAN)** Communication via a wireless, local area network
	**LED** LED is off.
	**LED** LED is on.
	**LED** LED flashing.

Symbols for certain types of information

Symbol	Meaning
	**Permitted** Procedures, processes or actions that are permitted.
	**Preferred** Procedures, processes or actions that are preferred.
	**Forbidden** Procedures, processes or actions that are forbidden.
	**Tip** Indicates additional information.
	Reference to documentation
	Reference to page
	Reference to graphic
	Visual inspection

Symbols in graphics

Symbol	Meaning
1, 2, 3, ...	Item numbers
1., 2., 3., ...	Series of steps
A, B, C, ...	Views
A-A, B-B, C-C, ...	Sections
	Hazardous area
	Safe area (non-hazardous area)
	Flow direction

Function and system design

Measuring principle

Following *Faraday's law of magnetic induction*, a voltage is induced in a conductor moving through a magnetic field.

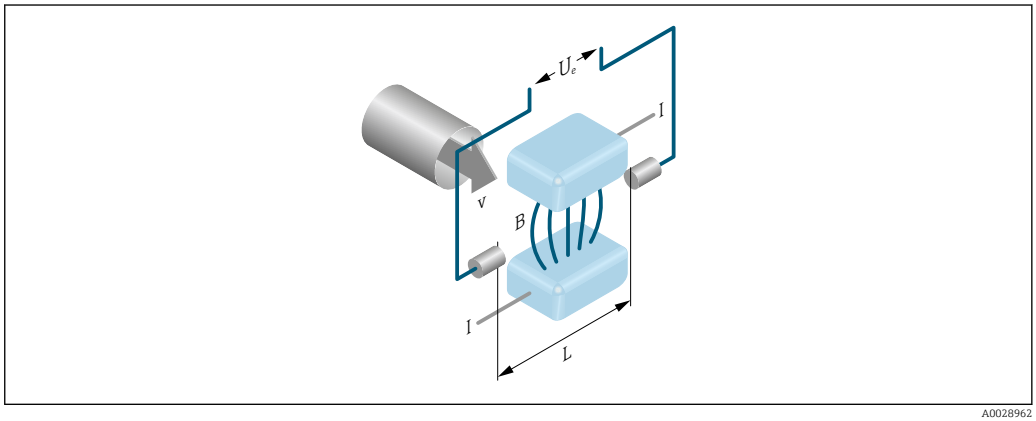

A0028962

Ue *Induced voltage*
B *Magnetic induction (magnetic field)*
L *Electrode spacing*
I *Current*
v *Flow velocity*

In the electromagnetic measuring principle, the flowing medium is the moving conductor. The voltage induced (U_e) is proportional to the flow velocity (v) and is supplied to the amplifier by means of two measuring electrodes. The flow volume (Q) is calculated via the pipe cross-section (A). The magnetic field is created through a switched direct current of alternating polarity.

Formulae for calculation

- Induced voltage $U_e = B \cdot L \cdot v$
- Volume flow $Q = A \cdot v$

Measuring system

The device consists of a transmitter and a sensor.

The device is available as a compact version:
The transmitter and sensor form a mechanical unit.

Transmitter

Proline 300 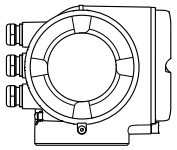 A0026708	Device versions and materials: ▪ Transmitter housing Aluminum, coated: aluminum, AlSi10Mg, coated ▪ Material of window in transmitter housing: Aluminum, coated: glass Configuration: ▪ External operation via 4-line, illuminated graphic local display (LCD) with touch control and guided menus ("Make-it-run" wizards) for application-specific commissioning. ▪ Via service interface or WLAN interface: ▪ Operating tools (e.g. FieldCare, DeviceCare) ▪ Web server (access via web browser, e.g. Microsoft Internet Explorer, Microsoft Edge)

Sensor

Promag W *Lap joint flange/lap joint flange, stamped plate or fixed flange with aluminum half-shell housing: DN 25 to 300 mm (1 to 12 in)* 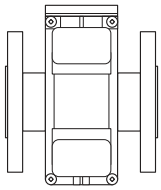 A0017040	▪ Nominal diameter range: DN 25 to 3 000 mm (1 to 120 in) ▪ Materials → 📄 104
Fixed flange with fully welded housing made of carbon steel: DN 25 to 300 mm (1 to 12 in) 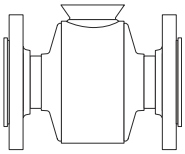 A0022673	
Fixed flange with fully welded housing made of carbon steel: DN 350 to 3 000 mm (14 to 120 in) 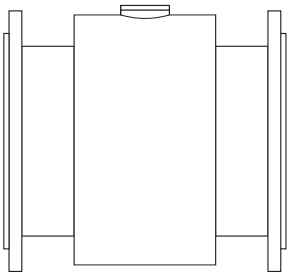 A0017041	

Equipment architecture

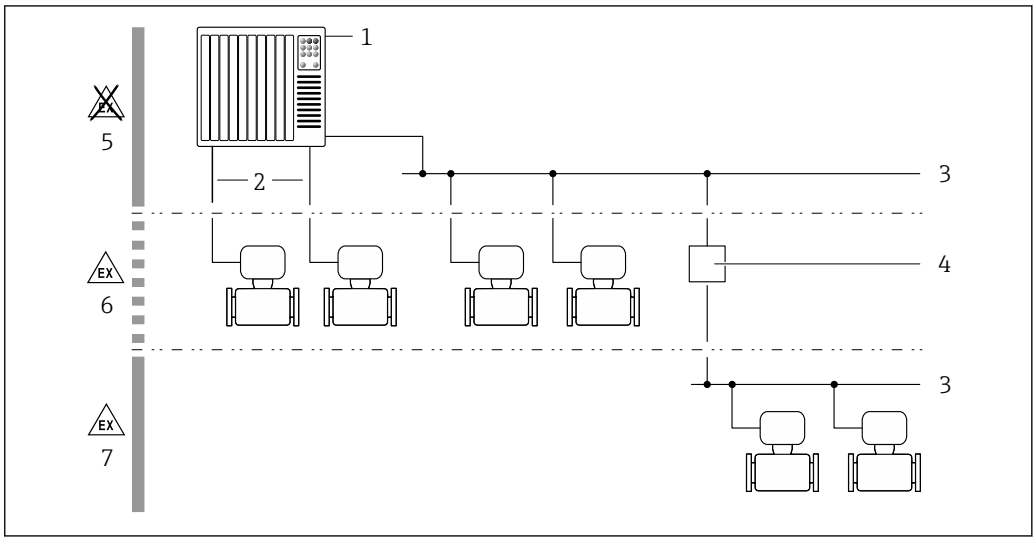

1 *Possibilities for integrating measuring instruments into a system*

1 *Automation system (e.g. PLC)*
2 *Connection cable (0/4 to 20 mA HART etc.)*
3 *Fieldbus*
4 *Coupler*
5 *Non-hazardous area*
6 *Hazardous area: Zone 2; Class I, Division 2*
7 *Hazardous area: Zone 1; Class I, Division 1*

Reliability

IT security

The manufacturer warranty is valid only if the product is installed and used as described in the Operating Instructions. The product is equipped with security mechanisms to protect it against any inadvertent changes to the settings.

IT security measures, which provide additional protection for the product and associated data transfer, must be implemented by the operators themselves in line with their security standards.

Device-specific IT security

The device offers a range of specific functions to support protective measures on the operator's side. These functions can be configured by the user and guarantee greater in-operation safety if used correctly. The following list provides an overview of the most important functions:

Function/interface	Factory setting	Recommendation
Write protection via hardware write protection switch → 🖹 8	Not enabled	On an individual basis following risk assessment
Access code (also applies to web server login or FieldCare connection) → 🖹 8	Not enabled (0000)	Assign a customized access code during commissioning
WLAN (order option in display module)	Enabled	On an individual basis following risk assessment
WLAN security mode	Enabled (WPA2-PSK)	Do not change
WLAN passphrase (Password) → 🖹 8	Serial number	Assign an individual WLAN passphrase during commissioning
WLAN mode	Access point	On an individual basis following risk assessment
Web server → 🖹 8	Enabled	On an individual basis following risk assessment
CDI-RJ45 service interface → 🖹 9	Enabled	-

Protecting access via hardware write protection

Write access to the parameters of the device via the local display, Web browser or operating tool (e.g. FieldCare, DeviceCare) can be disabled via a write protection switch (DIP switch on the main electronics module). When hardware write protection is enabled, only read access to the parameters is possible.

Hardware write protection is disabled when the device is delivered.

Protecting access via a password

Different passwords are available to protect write access to the device parameters or access to the device via the WLAN interface.

- User-specific access code
  Protect write access to the device parameters via the local display, web browser or operating tool (e.g. FieldCare, DeviceCare). Access authorization is clearly regulated through the use of a user-specific access code.
- WLAN passphrase
  The network key protects a connection between an operating unit (e.g. notebook or tablet) and the device via the WLAN interface which can be ordered as an option.
- Infrastructure mode
  When the device is operated in infrastructure mode, the WLAN passphrase corresponds to the WLAN passphrase configured on the operator side.

User-specific access code

Write access to the device parameters via the local display, web browser or operating tool (e.g. FieldCare, DeviceCare) can be protected by the modifiable, user-specific access code.

WLAN passphrase: Operation as WLAN access point

A connection between an operating unit (e.g. notebook or tablet) and the device via the WLAN interface, which can be ordered as an optional extra, is protected by the network key. The WLAN authentication of the network key complies with the IEEE 802.11 standard.

When the device is delivered, the network key is pre-defined depending on the device. It can be changed via the **WLAN settings** submenu in the **WLAN passphrase** parameter.

Infrastructure mode

A connection between the device and WLAN access point is protected by means of an SSID and passphrase on the system side. Please contact the relevant system administrator for access.

General notes on the use of passwords

- The access code and network key supplied with the device should be changed during commissioning for safety reasons.
- Follow the general rules for generating a secure password when defining and managing the access code and network key.
- The user is responsible for the management and careful handling of the access code and network key.

Access via web server

The integrated web server can be used to operate and configure the device via a web browser. The connection is established via the service interface (CDI-RJ45) or WLAN interface . For device versions with the Ethernet/IP and PROFINET communication protocols, the connection can also be established via the terminal connection for signal transmission with Ethernet/IP, PROFINET (RJ45 plug), PROFINET over Ethernet-APL (two-wire) or Modbus TCP over Ethernet-APL.

The web server is enabled when the device is delivered. The web server can be disabled if necessary via the **Web server functionality** parameter (e.g., after commissioning).

The device and status information can be hidden on the login page. This prevents unauthorized access to the information.

For detailed information on device parameters, see: Description of Device Parameters.

Access via OPC-UA

The "OPC UA Server" application package is available in the device version with the HART communication protocol → 124.

The device can communicate with OPC UA clients using the "OPC UA Server" application package.

The OPC UA server integrated in the device can be accessed via the WLAN access point using the WLAN interface - which can be ordered as an optional extra - or the service interface (CDI- RJ45) via Ethernet network. Access rights and authorization as per separate configuration.

The following Security Modes are supported as per the OPC UA Specification (IEC 62541):
- None
- Basic128Rsa15 – signed
- Basic128Rsa15 – signed and encrypted

Access via service interface (port 2): CDI-RJ45

The device can be connected to a network via the service interface. Device-specific functions guarantee the secure operation of the device in a network.

The use of relevant industrial standards and guidelines that have been defined by national and international safety committees, such as IEC/ISA62443 or the IEEE, is recommended. This includes organizational security measures such as the assignment of access authorization as well as technical measures such as network segmentation.

PROFINET, Ethernet/IP:

The device can be integrated into a ring topology. The device is integrated via the terminal connection for signal transmission, output 1 (port 1) and the terminal connection to the service interface (port 2)→ 116.

For detailed information on connecting transmitters with an Ex de approval, see separate document "Safety instructions" (XA) for the device.

Advanced safety requirements

If the specified requirements for measures cannot be met, alternative measures may need to be put in place. This may involve, for example, mechanical protection of the product against tampering, the cabling, or organizational measures. The Proline measuring instruments can be used in the open field for example. Measures to combat physical tampering of the Proline measuring instruments must be arranged by the customer.

Additional analysis is required if Proline measuring instruments are integrated into a different system. Please note the following:
- The fieldbus network (OT) and company network (IT) must be strictly separated.
- Endress+Hauser recommends the segmentation of the fieldbus networks according to DIN IEC 62443-3-3.

Network

Pay particular attention to the network components used, the router and switches for example. The operator must guarantee the integrity of the components. Access to the network must be restricted by the operator, if necessary.

FDI Packages

Signed FDI Packages can be obtained via www.endress.com for the configuration of the field device.

User training

Depending on the application scenario, users who are not specialized in this area may come in contact with the instrument. We recommend that these users be trained in the safe use of the relevant terminals, components and/or interfaces and be made aware of security issues.

Input

Measured variable

Direct measured variables

- Volume flow (proportional to induced voltage)
- Electrical conductivity

Calculated measured variables

Mass flow

Measuring range

Typically v = 0.01 to 10 m/s (0.03 to 33 ft/s) with the specified accuracy

Electrical conductivity: ≥ 5 µS/cm for liquids in general

Flow characteristic values in SI units: DN 25 to 125 mm (1 to 4 in)

Nominal diameter		Recommended flow	Factory settings		
		min./max. full scale value (v ~ 0.3...10 m/s)	Full scale value current output (v ~ 2.5 m/s)	Pulse value (~ 2 Pulse/s at v ~ 2.5 m/s)	Low flow cut off (v ~ 0.04 m/s)
[mm]	[in]	[dm³/min]	[dm³/min]	[dm³]	[dm³/min]
25	1	9 to 300	75	0.5	1
32	–	15 to 500	125	1	2
40	1 ½	25 to 700	200	1.5	3
50	2	35 to 1 100	300	2.5	5
65	–	60 to 2 000	500	5	8
80	3	90 to 3 000	750	5	12
100	4	145 to 4 700	1 200	10	20
125	–	220 to 7 500	1 850	15	30

Flow characteristic values in SI units: DN 150 to 3 000 mm (6 to 120 in)

Nominal diameter		Recommended flow	Factory settings		
		min./max. full scale value (v ~ 0.3...10 m/s)	Full scale value current output (v ~ 2.5 m/s)	Pulse value (~ 2 Pulse/s at v ~ 2.5 m/s)	Low flow cut off (v ~ 0.04 m/s)
[mm]	[in]	[m³/h]	[m³/h]	[m³]	[m³/h]
150	6	20 to 600	150	0.025	2.5
200	8	35 to 1 100	300	0.05	5
250	10	55 to 1 700	500	0.05	7.5
300	12	80 to 2 400	750	0.1	10
350	14	110 to 3 300	1 000	0.1	15
375	15	140 to 4 200	1 200	0.15	20
400	16	140 to 4 200	1 200	0.15	20
450	18	180 to 5 400	1 500	0.25	25
500	20	220 to 6 600	2 000	0.25	30
600	24	310 to 9 600	2 500	0.3	40
700	28	420 to 13 500	3 500	0.5	50
750	30	480 to 15 000	4 000	0.5	60
800	32	550 to 18 000	4 500	0.75	75
900	36	690 to 22 500	6 000	0.75	100
1000	40	850 to 28 000	7 000	1	125
–	42	950 to 30 000	8 000	1	125
1200	48	1 250 to 40 000	10 000	1.5	150

Nominal diameter		Recommended flow	Factory settings		
		min./max. full scale value (v ~ 0.3...10 m/s)	Full scale value current output (v ~ 2.5 m/s)	Pulse value (~ 2 Pulse/s at v ~ 2.5 m/s)	Low flow cut off (v ~ 0.04 m/s)
[mm]	[in]	[m³/h]	[m³/h]	[m³]	[m³/h]
–	54	1 550 to 50 000	13 000	1.5	200
1400	–	1 700 to 55 000	14 000	2	225
–	60	1 950 to 60 000	16 000	2	250
1600	–	2 200 to 70 000	18 000	2.5	300
–	66	2 500 to 80 000	20 500	2.5	325
1800	72	2 800 to 90 000	23 000	3	350
–	78	3 300 to 100 000	28 500	3.5	450
2000	–	3 400 to 110 000	28 500	3.5	450
–	84	3 700 to 125 000	31 000	4.5	500
2200	–	4 100 to 136 000	34 000	4.5	540
–	90	4 300 to 143 000	36 000	5	570
2400	–	4 800 to 162 000	40 000	5.5	650
–	96	5 000 to 168 000	42 000	6	675
–	102	5 700 to 190 000	47 500	7	750
2600	–	5 700 to 191 000	48 000	7	775
–	108	6 500 to 210 000	55 000	7	850
2800	–	6 700 to 222 000	55 500	8	875
–	114	7 100 to 237 000	59 500	8	950
3000	–	7 600 to 254 000	63 500	9	1 025
–	120	7 900 to 263 000	65 500	9	1 050

Flow characteristic values in SI units: DN 50 to 200 mm (2 to 8 in) for order code for "Design", option C "Fixed flange, constricted measuring tube, 0 x DN inlet/outlet runs"

Nominal diameter		Recommended flow	Factory settings		
		min./max. full scale value (v ~ 0.12...5 m/s)	Full scale value current output (v ~ 2.5 m/s)	Pulse value (~ 4 Pulse/s at v ~ 2.5 m/s)	Low flow cut off (v ~ 0.01 m/s)
[mm]	[in]	[dm³/min]	[dm³/min]	[dm³]	[dm³/min]
50	2	15 to 600	300	1.25	1.25
65	–	25 to 1 000	500	2	2
80	3	35 to 1 500	750	3	3.25
100	4	60 to 2 400	1 200	5	4.75
125	–	90 to 3 700	1 850	8	7.5
150	6	145 to 5 400	2 500	10	11
200	8	220 to 9 400	5 000	20	19

Flow characteristic values in SI units: DN 250 to 300 mm (10 to 12 in) for order code for "Design", option C "Fixed flange, constricted measuring tube, 0 x DN inlet/outlet runs"

Nominal diameter		Recommended flow	Factory settings		
		min./max. full scale value (v ~ 0.12...5 m/s)	Full scale value current output (v ~ 2.5 m/s)	Pulse value (~ 4 Pulse/s at v ~ 2.5 m/s)	Low flow cut off (v ~ 0.01 m/s)
[mm]	[in]	[m³/h]	[m³/h]	[m³]	[m³/h]
250	10	20 to 850	500	0.03	1.75
300	12	35 to 1300	750	0.05	2.75

Flow characteristic values in US units: DN 1 to 48 in (25 to 1200 mm)

Nominal diameter		Recommended flow	Factory settings		
		min./max. full scale value (v ~ 0.3...10 m/s)	Full scale value current output (v ~ 2.5 m/s)	Pulse value (~ 2 Pulse/s at v ~ 2.5 m/s)	Low flow cut off (v ~ 0.04 m/s)
[in]	[mm]	[gal/min]	[gal/min]	[gal]	[gal/min]
1	25	2.5 to 80	18	0.2	0.25
–	32	4 to 130	30	0.2	0.5
1 ½	40	7 to 185	50	0.5	0.75
2	50	10 to 300	75	0.5	1.25
–	65	16 to 500	130	1	2
3	80	24 to 800	200	2	2.5
4	100	40 to 1250	300	2	4
–	125	60 to 1950	450	5	7
6	150	90 to 2650	600	5	12
8	200	155 to 4850	1200	10	15
10	250	250 to 7500	1500	15	30
12	300	350 to 10600	2400	25	45
14	350	500 to 15000	3600	30	60
15	375	600 to 19000	4800	50	60
16	400	600 to 19000	4800	50	60
18	450	800 to 24000	6000	50	90
20	500	1000 to 30000	7500	75	120
24	600	1400 to 44000	10500	100	180
28	700	1900 to 60000	13500	125	210
30	750	2150 to 67000	16500	150	270
32	800	2450 to 80000	19500	200	300
36	900	3100 to 100000	24000	225	360
40	1000	3800 to 125000	30000	250	480
42	–	4200 to 135000	33000	250	600
48	1200	5500 to 175000	42000	400	600

Flow characteristic values in US units: DN 54 to 120 in (1400 to 3000 mm)

Nominal diameter		Recommended flow	Factory settings		
		min./max. full scale value (v ~ 0.3...10 m/s)	Full scale value current output (v ~ 2.5 m/s)	Pulse value (~ 2 Pulse/s at v ~ 2.5 m/s)	Low flow cut off (v ~ 0.04 m/s)
[in]	[mm]	[Mgal/d]	[Mgal/d]	[Mgal]	[Mgal/d]
54	–	9 to 300	75	0.0005	1.3
–	1400	10 to 340	85	0.0005	1.3
60	–	12 to 380	95	0.0005	1.3
–	1600	13 to 450	110	0.0008	1.7
66	–	14 to 500	120	0.0008	2.2
72	1800	16 to 570	140	0.0008	2.6
78	–	18 to 650	175	0.0010	3.0
–	2000	20 to 700	175	0.0010	2.9
84	–	24 to 800	190	0.0011	3.2
–	2200	26 to 870	210	0.0012	3.4
90	–	27 to 910	220	0.0013	3.6
–	2400	31 to 1030	245	0.0014	4.0
96	–	32 to 1066	265	0.0015	4.0
102	–	34 to 1203	300	0.0017	5.0
–	2600	34 to 1212	305	0.0018	5.0
108	–	35 to 1300	340	0.0020	5.0
–	2800	42 to 1405	350	0.0020	6.0
114	–	45 to 1503	375	0.0022	6.0
–	3000	48 to 1613	405	0.0023	6.0
120	–	50 to 1665	415	0.0024	7.0

Flow characteristic values in US units: DN 2 to 12 in (50 to 300 mm) for order code for "Design", option C "Fixed flange, constricted measuring tube, 0 x DN inlet/outlet runs"

Nominal diameter		Recommended flow	Factory settings		
		min./max. full scale value (v ~ 0.12...5 m/s)	Full scale value current output (v ~ 2.5 m/s)	Pulse value (~ 4 Pulse/s at v ~ 2.5 m/s)	Low flow cut off (v ~ 0.01 m/s)
[in]	[mm]	[gal/min]	[gal/min]	[gal]	[gal/min]
2	50	4 to 160	75	0.3	0.35
–	65	7 to 260	130	0.5	0.6
3	80	10 to 400	200	0.8	0.8
4	100	16 to 650	300	1.2	1.25
–	125	24 to 1000	450	1.8	2
6	150	40 to 1400	600	2.5	3
8	200	60 to 2500	1200	5	5
10	250	90 to 3700	1500	6	8
12	300	155 to 5700	2400	9	12

Recommended measuring range

Flow limit → 70

Operable flow range

Over 1000 : 1

Input signal

Output and input variants

→ 16

External measured values

To increase the measurement accuracy of certain measured variables or to calculate the mass flow, the automation system can continuously write different measured values to the measuring instrument:
- Medium temperature enables temperature-compensated conductivity measurement (e.g. iTEMP)
- Reference density for calculating the mass flow

Various pressure and temperature measuring devices can be ordered from Endress+Hauser: see "Accessories" section → 127

It is recommended to read in external measured values to calculate the corrected volume flow.

HART protocol

The measured values are written from the automation system to the measuring device via the HART protocol. The pressure transmitter must support the following protocol-specific functions:
- HART protocol
- Burst mode

Current input

The measured values are written from the automation system to the measuring device via the current input → 14.

Digital communication

The measured values can be written by the automation system via:
- FOUNDATION Fieldbus
- PROFIBUS DP
- PROFIBUS PA
- Modbus RS485
- Modbus TCP over Ethernet-APL
- EtherNet/IP
- PROFINET
- PROFINET over Ethernet-APL

Current input 0/4 to 20 mA

Current input	0/4 to 20 mA (active/passive)
Current span	▪ 4 to 20 mA (active) ▪ 0/4 to 20 mA (passive)
Resolution	1 µA
Voltage drop	Typically: 0.6 to 2 V for 3.6 to 22 mA (passive)
Maximum input voltage	≤ 30 V (passive)
Open-circuit voltage	≤ 28.8 V (active)
Possible input variables	▪ Temperature ▪ Density

Status input

Maximum input values	▪ DC −3 to 30 V ▪ If status input is active (ON): R_i >3 kΩ
Response time	Configurable: 5 to 200 ms
Input signal level	▪ Low signal: DC −3 to +5 V ▪ High signal: DC 12 to 30 V
Assignable functions	▪ Off ▪ Reset the individual totalizers separately ▪ Reset all totalizers ▪ Flow override

Output

Output and input variants

Depending on the option selected for output/input 1, different options are available for the other outputs and inputs. Only one option can be selected for each output/input 1 to 3. The following tables must be read vertically (↓).

Example: If the option BA "4–20 mA HART" was selected for output/input 1, one of the options A, B, D, E, F, H, I or J is available for output 2 and one of the options A, B, D, E, F, H, I or J is available for output 3.

Output/input 1 and options for output/input 2

Options for output/input 3 → 17

Order code for "Output; input 1" (020) →	Possible options														
Current output 4 to 20 mA HART	**BA**														
Current output 4 to 20 mA HART Ex i passive	↓	**CA**													
Current output 4 to 20 mA HART Ex i active		↓	**CC**												
FOUNDATION fieldbus			↓	**SA**											
FOUNDATION fieldbus Ex i				↓	**TA**										
PROFIBUS DP					↓	**LA**									
PROFIBUS PA						↓	**GA**								
PROFIBUS PA Ex i							↓	**HA**							
Modbus RS485								↓	**MA**						
Ethernet/IP 2-port switch integrated									↓	**NA**					
PROFINET 2-port switch integrated										↓	**RA**				
PROFINET over Ethernet-APL											↓	**RB**			
PROFINET over Ethernet-APL Ex i												↓	**RC**		
Modbus TCP over Ethernet-APL 10 Mbit/s, SPE 10 Mbit/s, Ethernet 100 Mbit/s													↓	**MB**	
Modbus TCP over Ethernet-APL, Ex i, 10 Mbit/s, Ethernet 100 Mbit/s														↓	**MC**
Order code for "Output; input 2" (021) →	↓	↓	↓	↓	↓	↓	↓	↓	↓	↓	↓	↓	↓	↓	↓
Not used	**A**	**A**	**A**	**A**	**A**	**A**	**A**	**A**	**A**	**A**	**A**	**A**	**A**	**A**	**A**
Current output 4 to 20 mA	**B**			**B**		**B**	**B**		**B**	**B**	**B**	**B**		**B**	
Current output 4 to 20 mA Ex i passive		**C**	**C**		**C**			**C**					**C**		**C**
User-configurable input/output [1]	**D**			**D**		**D**	**D**		**D**	**D**	**D**	**D**		**D**	
Pulse/frequency/switch output	**E**			**E**		**E**	**E**		**E**	**E**	**E**	**E**		**E**	
Double pulse output [2]	**F**								**F**						
Pulse/frequency/switch output Ex i passive		**G**	**G**		**G**			**G**					**G**		**G**
Relay output	**H**			**H**		**H**	**H**		**H**	**H**	**H**	**H**		**H**	
Current input 0/4 to 20 mA	**I**			**I**		**I**	**I**		**I**	**I**	**I**	**I**		**I**	
Status input	**J**			**J**		**J**	**J**		**J**	**J**	**J**	**J**		**J**	

1) A specific input or output can be assigned to a user-configurable input/output → 24.
2) If double pulse output (F) is selected for output/input 2 (021), only the double pulse output (F) option is available for selection for output/input 3 (022).

Output/input 1 and options for output/input 3

Options for output/input 2 → 16

Order code for "Output; input 1" (020) →	Possible options														
Current output 4 to 20 mA HART	**BA**														
Current output 4 to 20 mA HART Ex i passive	↓	**CA**													
Current output 4 to 20 mA HART Ex i active		↓	**CC**												
FOUNDATION fieldbus			↓	**SA**											
FOUNDATION fieldbus Ex i				↓	**TA**										
PROFIBUS DP					↓	**LA**									
PROFIBUS PA						↓	**GA**								
PROFIBUS PA Ex i							↓	**HA**							
Modbus RS485								↓	**MA**						
Ethernet/IP 2-port switch integrated									↓	**NA**					
PROFINET 2-port switch integrated										↓	**RA**				
PROFINET over Ethernet-APL 10 Mbit/s, 2-wire											↓	**RB**			
PROFINET over Ethernet-APL Ex i, 10 Mbit/s, 2-wire												↓	**RC**		
Modbus TCP over Ethernet-APL 10 Mbit/s, SPE 10 Mbit/s, Ethernet 100 Mbit/s													↓	**MB**	
Modbus TCP over Ethernet-APL, Ex i, 10 Mbit/s, Ethernet 100 Mbit/s														↓	**MC**
Order code for "Output; input 3" (022) →	↓	↓	↓	↓	↓	↓	↓	↓	↓	↓	↓	↓	↓	↓	↓
Not used	**A**	**A**	**A**	**A**	**A**	**A**	**A**	**A**	**A**	**A**	**A**	**A**	**A**	**A**	**A**
Current output 4 to 20 mA	**B**					**B**			**B**	**B**	**B**	**B**		**B**	
Current output 4 to 20 mA Ex i passive		**C**	**C**												
User-configurable input/output	**D**					**D**			**D**	**D**	**D**	**D**		**D**	
Pulse/frequency/switch output	**E**					**E**			**E**	**E**	**E**	**E**		**E**	
Double pulse output (slave) [1]	**F**								**F**						
Pulse/frequency/switch output Ex i passive		**G**	**G**												
Relay output	**H**					**H**			**H**	**H**	**H**	**H**		**H**	
Current input 0/4 to 20 mA	**I**					**I**			**I**	**I**	**I**	**I**		**I**	
Status input	**J**					**J**			**J**	**J**	**J**	**J**		**J**	

1) If double pulse output (F) is selected for output/input 2 (021), only the double pulse output (F) option is available for output/input 3 (022).

Output signal

Current output 4 to 20 mA HART

Order code	"Output; input 1" (20): Option BA: current output 4 to 20 mA HART
Signal mode	Can be set to: ▪ Active ▪ Passive
Current range	Can be set to: ▪ 4 to 20 mA NAMUR ▪ 4 to 20 mA US ▪ 4 to 20 mA ▪ 0 to 20 mA (only if the signal mode is active) ▪ Fixed current
Open-circuit voltage	DC 28.8 V (active)
Maximum input voltage	DC 30 V (passive)
Load	250 to 700 Ω
Resolution	0.38 µA
Damping	Configurable: 0 to 999.9 s
Assignable measured variables	▪ Volume flow ▪ Mass flow ▪ Corrected volume flow ▪ Flow velocity ▪ Conductivity ▪ Electronics temperature

Current output 4 to 20 mA HART Ex i

Order code	"Output; input 1" (20) choose from: ▪ Option CA: current output 4 to 20 mA HART Ex i passive ▪ Option CC: current output 4 to 20 mA HART Ex i active
Signal mode	Depends on the selected order version.
Current range	Can be set to: ▪ 4 to 20 mA NAMUR ▪ 4 to 20 mA US ▪ 4 to 20 mA ▪ 0 to 20 mA (only if the signal mode is active) ▪ Fixed current
Open-circuit voltage	DC 21.8 V (active)
Maximum input voltage	DC 30 V (passive)
Load	▪ 250 to 400 Ω (active) ▪ 250 to 700 Ω (passive)
Resolution	0.38 µA
Damping	Configurable: 0 to 999.9 s
Assignable measured variables	▪ Volume flow ▪ Mass flow ▪ Corrected volume flow ▪ Flow velocity ▪ Conductivity ▪ Electronics temperature

FOUNDATION Fieldbus

FOUNDATION Fieldbus	H1, IEC 61158-2, galvanically isolated
Data transfer	31.25 kbit/s

Current consumption	10 mA
Permitted supply voltage	9 to 32 V
Bus connection	With integrated reverse polarity protection

PROFIBUS DP

Signal encoding	NRZ code
Data transfer	9.6 kBaud...12 MBaud
Terminating resistor	Integrated, can be activated via DIP switches

PROFIBUS PA

PROFIBUS PA	In accordance with EN 50170 Volume 2, IEC 61158-2 (MBP), galvanically isolated
Data transmission	31.25 kbit/s
Current consumption	10 mA
Permitted supply voltage	9 to 32 V
Bus connection	With integrated reverse polarity protection

Modbus RS485

Physical interface	RS485 in accordance with EIA/TIA-485 standard
Terminating resistor	Integrated, can be activated via DIP switches

Modbus TCP over Ethernet-APL

Port 1: Modbus TCP over Ethernet-APL 10 Mbit/s	

Device usage	**Device connection to an APL field switch (terminal 26/27)**
	The device may only be operated according to the following APL port classifications:
	▪ If used in hazardous areas: SLAA or SLAC [1)]
	▪ If used in non-hazardous areas: SLAX
	Connection values of APL field switch (corresponds to APL port classification SPCC or SPAA, for instance):
	▪ Maximum input voltage: 15 V_{DC}
	▪ Minimum output values: 0.54 W
	Device connection to an SPE switch
	▪ In non-hazardous areas, the device can be used with an appropriate SPE switch:
	  ▪ Maximum output voltage: 30 V_{DC}
	  ▪ Minimum output power: 1.85 W
	▪ The SPE switch must support the 10BASE-T1L standard and PoDL power classes 10, 11 or 12 and have a function to disable power class detection.

Standards	According to IEEE 802.3cg, APL port profile specification v1.0, galvanically isolated
Data transfer	Full-duplex (APL/SPE)
Current consumption	Terminal 26/27 max. approx. 45 mA
Permitted supply voltage	9 to 30 V
Bus connection	Terminal 26/27 with integrated reverse polarity protection

1) For more information on using the device in the hazardous area, see the Ex-specific Safety Instructions

Port 2: Modbus TCP over Ethernet 100 Mbit/s	
Device usage	**Device connection to a Fast Ethernet (RJ45) switch** In non-hazardous areas, the Ethernet switch must support the standard 100BASE-TX.
Standards	In accordance with IEEE 802.3u
Data transfer	Half-duplex, full-duplex
Current consumption	-
Permitted supply voltage	-
Bus connection	Service interface (RJ45)

EtherNet/IP

Standards	In accordance with IEEE 802.3

PROFINET

Standards	In accordance with IEEE 802.3

PROFINET over Ethernet-APL

Device use	**Device connection to an APL field switch** The device may only be operated according to the following APL port classifications: ▪ If used in hazardous areas: SLAA or SLAC [1)] ▪ If used in non-hazardous areas: SLAX Connection values of APL field switch (corresponds to APL port classification SPCC or SPAA, for instance): ▪ Maximum input voltage: 15 V_{DC} ▪ Minimum output values: 0.54 W **Device connection to an SPE switch** ▪ In non-hazardous areas, the device can be used with an appropriate SPE switch: The device can be connected to an SPE switch with a maximum voltage of 30 V_{DC} and a minimum output power of 1.85 W connected. ▪ The SPE switch must support the 10BASE-T1L standard and PoDL power classes 10, 11 or 12 and have a function to disable power class detection.
PROFINET	According to IEC 61158 and IEC 61784
Ethernet-APL	According to IEEE 802.3cg, APL port profile specification v1.0, galvanically isolated
Data transfer	10 Mbit/s
Current consumption	**Transmitter** ▪ Max. 400 mA(24 V) ▪ Max. 200 mA (110 V, 50/60 Hz; 230 V, 50/60 Hz)
Permitted supply voltage	9 to 30 V
Network connection	With integrated reverse polarity protection

1) For more information on using the device in the hazardous area, see the Ex-specific Safety Instructions

Current output 4 to 20 mA

Order code	"Output; input 2" (21), "Output; input 3" (022): Option B: current output 4 to 20 mA
Signal mode	Can be set to: ▪ Active ▪ Passive
Current range	Can be set to: ▪ 4 to 20 mA NAMUR ▪ 4 to 20 mA US ▪ 4 to 20 mA ▪ 0 to 20 mA (only if the signal mode is active) ▪ Fixed current
Maximum output values	22.5 mA
Open-circuit voltage	DC 28.8 V (active)
Maximum input voltage	DC 30 V (passive)
Load	0 to 700 Ω
Resolution	0.38 µA
Damping	Configurable: 0 to 999.9 s
Assignable measured variables	▪ Volume flow ▪ Mass flow ▪ Corrected volume flow ▪ Flow velocity ▪ Conductivity ▪ Electronics temperature

Current output 4 to 20 mA Ex i passive

Order code	"Output; input 2" (21), "Output; input 3" (022): Option C: current output 4 to 20 mA Ex i passive
Signal mode	Passive
Current range	Can be set to: ▪ 4 to 20 mA NAMUR ▪ 4 to 20 mA US ▪ 4 to 20 mA ▪ Fixed current
Maximum output values	22.5 mA
Maximum input voltage	DC 30 V
Load	0 to 700 Ω
Resolution	0.38 µA
Damping	Configurable: 0 to 999 s
Assignable measured variables	▪ Volume flow ▪ Mass flow ▪ Corrected volume flow ▪ Flow velocity ▪ Conductivity ▪ Electronics temperature

Pulse/frequency/switch output

Function	Can be configured as pulse, frequency or switch output
Version	Open collector Can be set to: ▪ Active ▪ Passive ▪ Passive NAMUR Ex-i, passive
Maximum input values	DC 30 V, 250 mA (passive)
Open-circuit voltage	DC 28.8 V (active)
Voltage drop	For 22.5 mA: ≤ DC 2 V
Pulse output	
Maximum input values	DC 30 V, 250 mA (passive)
Maximum output current	22.5 mA (active)
Open-circuit voltage	DC 28.8 V (active)
Pulse width	Configurable: 0.05 to 2 000 ms
Maximum pulse rate	10 000 Impulse/s
Pulse value	Configurable
Assignable measured variables	▪ Volume flow ▪ Mass flow ▪ Corrected volume flow
Frequency output	
Maximum input values	DC 30 V, 250 mA (passive)
Maximum output current	22.5 mA (active)
Open-circuit voltage	DC 28.8 V (active)
Output frequency	Configurable: end value frequency 2 to 10 000 Hz(f_{max} = 12 500 Hz)
Damping	Configurable: 0 to 999.9 s
Pulse/pause ratio	1:1
Assignable measured variables	▪ Volume flow ▪ Mass flow ▪ Corrected volume flow ▪ Flow velocity ▪ Conductivity ▪ Electronics temperature
Switch output	
Maximum input values	DC 30 V, 250 mA (passive)
Open-circuit voltage	DC 28.8 V (active)
Switching behavior	Binary, conductive or non-conductive
Switching delay	Configurable: 0 to 100 s

Number of switching cycles	Unlimited

Assignable functions	▪ Disable
	▪ On
	▪ Diagnostic behavior
	▪ Limit value:
	  ▪ Disable
	  ▪ Volume flow
	  ▪ Mass flow
	  ▪ Corrected volume flow
	  ▪ Flow velocity
	  ▪ Conductivity
	  ▪ Totalizer 1-3
	  ▪ Electronics temperature
	▪ Flow direction monitoring
	▪ Status
	  ▪ Empty pipe detection
	  ▪ Buildup index
	  ▪ HBSI limit value exceeded
	  ▪ Low flow cut off

Double pulse output

Function	Double pulse
Version	Open collector Can be set to: ▪ Active ▪ Passive ▪ Passive NAMUR
Maximum input values	DC 30 V, 250 mA (passive)
Open-circuit voltage	DC 28.8 V (active)
Voltage drop	For 22.5 mA: ≤ DC 2 V
Output frequency	Configurable: 0 to 1 000 Hz
Damping	Configurable: 0 to 999 s
Pulse/pause ratio	1:1
Assignable measured variables	▪ Volume flow ▪ Mass flow ▪ Corrected volume flow ▪ Flow velocity ▪ Conductivity ▪ Electronics temperature

Relay output

Function	Switch output
Version	Relay output, galvanically isolated
Switching behavior	Can be set to: ▪ NO (normally open), factory setting ▪ NC (normally closed)

Maximum switching capacity (passive)	▪ DC 30 V, 0.1 A ▪ AC 30 V, 0.5 A

Assignable functions	▪ Disable
	▪ On
	▪ Diagnostic behavior
	▪ Limit value:
	  ▪ Disable
	  ▪ Volume flow
	  ▪ Mass flow
	  ▪ Corrected volume flow
	  ▪ Flow velocity
	  ▪ Conductivity
	  ▪ Totalizer 1-3
	  ▪ Electronics temperature
	▪ Flow direction monitoring
	▪ Status
	  ▪ Empty pipe detection
	  ▪ Buildup index
	  ▪ HBSI limit value exceeded
	  ▪ Low flow cut off

User-configurable input/output

One specific input or output is assigned to a user-configurable input/output (configurable I/O) during device commissioning.

The following inputs and outputs are available for assignment:
- Choice of current output: 4 to 20 mA (active), 0/4 to 20 mA (passive)
- Pulse/frequency/switch output
- Choice of current input: 4 to 20 mA (active), 0/4 to 20 mA (passive)
- Status input

The technical values correspond to those of the inputs and outputs described in this section.

Signal on alarm

Depending on the interface, failure information is displayed as follows:

HART current output

Device diagnostics	Device condition can be read out via HART Command 48

PROFIBUS PA

Status and alarm messages	Diagnostics in accordance with PROFIBUS PA Profile 3.02
Failure current FDE (Fault Disconnection Electronic)	0 mA

PROFIBUS DP

Status and alarm messages	Diagnostics in accordance with PROFIBUS PA Profile 3.02

EtherNet/IP

Device diagnostics	Device condition can be read out in Input Assembly

PROFINET

Device diagnostics	According to "Application Layer protocol for decentralized periphery", Version 2.3

PROFINET over Ethernet-APL

Device diagnostics	Diagnostics according to PROFINET PA Profile 4.02

FOUNDATION Fieldbus

Status and alarm messages	Diagnostics in accordance with FF-891
Failure current FDE (Fault Disconnection Electronic)	0 mA

Modbus RS485

Failure mode	Choose from: ▪ NaN value instead of current value ▪ Last valid value

Modbus TCP over Ethernet-APL/SPE/Fast Ethernet

Failure mode	Choose from: ▪ NaN value instead of current value ▪ Last valid value

Current output

Current output 4-20 mA	
Failure mode	Configurable: ▪ 4 to 20 mA in accordance with NAMUR recommendation NE 43 ▪ 4 to 20 mA in accordance with US ▪ Min. value: 3.59 mA ▪ Max. value: 22.5 mA ▪ Definable value between: 3.59 to 22.5 mA ▪ Actual value ▪ Last valid value
Current output 4-20 mA	
Failure mode	Configurable: ▪ Maximum alarm: 22 mA ▪ Definable value between: 0 to 20.5 mA

Pulse/frequency/switch output

Pulse output	
Failure mode	Configurable: ▪ Actual value ▪ No pulses
Frequency output	
Failure mode	Configurable: ▪ Actual value ▪ 0 Hz ▪ Definable value between: 2 to 12 500 Hz
Switch output	
Failure mode	Configurable: ▪ Current status ▪ Open ▪ Closed

Relay output

Failure mode	Choose from: ▪ Current status ▪ Open ▪ Closed

Local display

Plain text display	With information on cause and remedial measures
Backlight	Red lighting indicates a device error.

Status signal as per NAMUR recommendation NE 107

Interface/protocol

- Via digital communication:
  - HART protocol
  - FOUNDATION fieldbus
  - PROFIBUS PA
  - PROFIBUS DP
  - Modbus RS485
  - Modbus TCP over Ethernet-APL
  - Ethernet/IP
  - PROFINET
  - PROFINET over Ethernet-APL
- Via service interface
  - Service interface CDI-RJ45
  - Via service interface/port 2: (RJ45)
  - WLAN interface
- Plain text display
  - With information on cause and remedial action
  - Modbus TCP

Additional information on remote operation → 109

Web browser

Plain text display	With information on cause and remedial measures

LEDs

Status information	Status indicated by various LEDs The following information is displayed depending on the device version: ▪ Supply voltage active ▪ Data transmission active ▪ Device alarm/error has occurred ▪ Network available [1] ▪ Connection established [1] ▪ Diagnostic status [2] ▪ PROFINET blinking feature [3]

1) Only available for PROFINET, PROFINET over Ethernet-APL, Modbus over Ethernet-APL, Ethernet/IP
2) Only available for Modbus over Ethernet-APL
3) Only available for PROFINET, PROFINET over Ethernet-APL,

Load Output signal → 18

Ex connection data **Safety-related values**

Order code for "Output; input 1"	Type of output	Safety-related values	
		"Output; input 1"	"Service interface"
Option **BA**	Current output 4 to 20 mA HART	**I/O1: (terminal 26/27)** U_N = 30 V_{DC} U_M = 250 V_{AC}	**Port 2: (RJ45)** U_N = 3.3 V_{AC} U_M = 250 V_{AC}
Option **GA**	PROFIBUS PA	**I/O1: (terminal 26/27)** U_N = 32 V_{DC} U_M = 250 V_{AC}	**Port 2: (RJ45)** U_N = 3.3 V_{AC} U_M = 250 V_{AC}
Option **LA**	PROFIBUS DP	**I/O1: (terminal 26/27)** U_N = 5 V U_M = 250 V_{AC}	**Port 2: (RJ45)** U_N = 3.3 V_{AC} U_M = 250 V_{AC}
Option **MA**	Modbus RS485	**I/O1: (terminal 26/27)** U_N = 5 V U_M = 250 V_{AC}	**Port 2: (RJ45)** U_N = 3.3 V_{AC} U_M = 250 V_{AC}
Option **MB**	Modbus TCP over Ethernet-APL 10 Mbit/s, SPE 10 Mbit/s, Ethernet 100 Mbit/s	**Port 1: (terminal 26/27)** APL port profile SLAX SPE PoDL classes 10, 11, 12 U_N = 30 V_{DC} U_M = 250 V_{AC}	**Port 2: (RJ45)** U_N = 3.3 V_{AC} U_M = 250 V_{AC}
Option **NA**	Ethernet/IP	**Port 1: (RJ45)** U_N = 3.3 V_{AC} U_M = 250 V_{AC}	**Port 2: (RJ45)** U_N = 3.3 V_{AC} U_M = 250 V_{AC}
Option **RA**	PROFINET	**Port 1: (RJ45)** U_N = 3.3 V_{AC} U_M = 250 V_{AC}	**Port 2: (RJ45)** U_N = 3.3 V_{AC} U_M = 250 V_{AC}
Option **RB**	PROFINET over Ethernet-APL/SPE, 10 Mbit/s	**Port 1: (terminal 26/27)** APL port profile SLAX SPE PoDL classes 10, 11, 12 U_N = 30 V_{DC} U_M = 250 V_{AC}	**Port 2: (RJ45)** U_N = 3.3 V_{AC} U_M = 250 V_{AC}
Option **SA**	FOUNDATION fieldbus	**I/O1: (terminal 26/27)** U_N = 32 V_{DC} U_M = 250 V_{AC}	**Port 2: (RJ45)** U_N = 3.3 V_{AC} U_M = 250 V_{AC}
The specifications for U_M only apply to devices with Ex i circuits. Zone 1; Class I, Division 1 devices; Zone 2; Class I Division 2 devices with Ex i sensor			

Order code for "Output; input 2"; "Output; input 3"	Type of output	Safety-related values			
		Output; input 2		Output; input 3	
		24 (+)	25 (–)	22 (+)	23 (–)
Option **B**	Current output 4 to 20 mA	U_N = 30 V_{DC} U_M = 250 V_{AC}			
Option **D**	User-configurable input/output	U_N = 30 V_{DC} U_M = 250 V_{AC}			
Option **E**	Pulse/frequency/switch output	U_N = 30 V_{DC} U_M = 250 V_{AC}			
Option **F**	Double pulse output	U_N = 30 V_{DC} U_M = 250 V_{AC}			
Option **H**	Relay output	U_N = 30 V_{DC} I_N =100 mA_{DC}/500 mA_{AC} U_M = 250 V_{AC}			
Option **I**	Current input 4 to 20 mA	U_N = 30 V_{DC} U_M = 250 V_{AC}			
Option **J**	Status input	U_N = 30 V_{DC} U_M = 250 V_{AC}			

Intrinsically safe values

Order code for "Output; input 1"	Type of output	Intrinsically safe values "Output 1"	Intrinsically safe values "Service interface"
Option **CA**	Current output 4 to 20 mA HART Ex i passive	**I/O: (terminal 26/27)** U_i = 30 V I_i = 100 mA P_i = 1.25 W L_i = 0 µH C_i = 6 nF	**Port 2: (RJ45)** [1) 2)] U_i = 10 V I_i = n.a. P_i = n.a. L_i = 0 µH C_i = 200 nF
Option **CC**	Current output 4 to 20 mA HART Ex i active	**I/O: (terminal 26/27)** **Ex ia** [1)] U_0 = 21.8 V I_0 = 90 mA P_0 = 491 mW L_0 = 4.1 mH (IIC)/ 15 mH (IIB) C_0 = 160 nF (IIC)/ 1 160 nF (IIB) U_i = 30 V I_i = 10 mA P_i = 0.3 W L_i = 5 µH C_i = 6 nF **Ex ic** [3)] U_0 = 21.8 V I_0 = 90 mA P_0 = 491 mW L_0 = 9 mH (IIC)/ 39 mH (IIB) C_0 = 600 nF (IIC)/ 4 000 nF (IIB) U_i = 30 V I_i = 10 mA P_i = 0.3 W L_i = 5 µH C_i = 6 nF	**Port 2: (RJ45)** [1) 2)] U_i = 10 V I_i = n.a. P_i = n.a. L_i = 0 µH C_i = 200 nF
Option **HA**	PROFIBUS PA Ex i (FISCO Field Device)	**I/O: (terminal 26/27)** **Ex ia** [1)] U_i = 30 V I_i = 570 mA P_i = 8.5 W L_i = 10 µH C_i = 5 nF **Ex ic** [3)] U_i = 32 V I_i = 570 mA P_i = 8.5 W L_i = 10 µH C_i = 5 nF	**Port 2: (RJ45)** [1) 2)] U_i = 10 V I_i = n.a. P_i = n.a. L_i = 0 µH C_i = 200 nF
Option **TA**	FOUNDATION fieldbus Ex i	**I/O: (terminal 26/27)** **Ex ia** [1)] U_i = 30 V I_i = 570 mA P_i = 8.5 W L_i = 10 µH C_i = 5 nF **Ex ic** [3)] U_i = 32 V I_i = 570 mA P_i = 8.5 W L_i = 10 µH C_i = 5 nF	**Port 2: (RJ45)** [1) 2)] U_i = 10 V I_i = n.a. P_i = n.a. L_i = 0 µH C_i = 200 nF
Option **RC**	PROFINET over Ethernet-APL, Ex i, 10 Mbit/s	**Port 1: (terminal 26/27)** 2-WISE [4)] power load, APL port profile SLAA [1)]/SLAC [3)] **Ex ia** U_i = 17.5 V I_i = 380 mA P_i = 5.32 W L_i = 10 µH C_i = 5 nF	**Port 2: (RJ45)** [1)] U_i = 10 V I_i = n.a. P_i = n.a. L_i = 0 µH C_i = 200 nF
Option **MC**	Modbus TCP, Ex i, 10 Mbit/s, Ethernet 100 Mbit/s	**Port 1: (terminal 26/27)** 2-WISE [4)] power load, APL port profile SLAA [1)]/SLAC [3)] **Ex ia** U_i = 17.5 V I_i = 380 mA P_i = 5.32 W Li = 10 µH Ci = 5 nF	**Port 2: (RJ45)** [1)] U_i = 10 V I_i = n.a. P_i = n.a. L_i = 0 µH C_i = 200 nF

1) Only available for transmitter Zone 1; Class I, Division 1.
2) Only as service interface
3) Only available for the Zone 2, Class I, Division 2 transmitter and only for the Proline 500 – digital transmitter
4) Cable requirements as per APL-Engineering-Guideline (www.ethernet-apl.org).

Order code for "Output; input 2"; "Output; input 3"	Type of output	Intrinsically safe values or NIFW values			
		Output; input 2		Output; input 3	
		24 (+)	25 (–)	22 (+)	23 (–)
Option **C**	Current output 4 to 20 mA Ex i passive	U_i = 30 V I_i = 100 mA P_i = 1.25 W L_i = 0 C_i = 0			
Option **G**	Pulse/frequency/switch output Ex-i passive	U_i = 30 V I_i = 100 mA P_i = 1.25 W L_i = 0 C_i = 0			

Low flow cut off

The switch points for low flow cut off are user-selectable.

Galvanic isolation

The outputs are galvanically isolated:
- from the power supply
- from one another
- from the potential equalization (PE) connection

Protocol-specific data

HART

Manufacturer ID	0x11
Device type ID	0x3C
HART protocol revision	7
Device description files (DTM, DD)	Information and files under: www.endress.com
HART load	Min. 250 Ω
System integration	Information on system integration: Operating Instructions → 127. ▪ Measured variables via HART protocol ▪ Burst Mode functionality

FOUNDATION Fieldbus

Manufacturer ID	0x452B48 (hex)
Ident number	0x103C (hex)
Device revision	1
DD revision	Information and files under: ▪ www.endress.com ▪ www.fieldcommgroup.org
CFF revision	
Interoperability Test Kit (ITK)	Version 6.2.0
ITK Test Campaign Number	Information: ▪ www.endress.com ▪ www.fieldcommgroup.org
Link Master capability (LAS)	Yes
Choice of "Link Master" and "Basic Device"	Yes Factory setting: Basic Device
Node address	Factory setting: 247 (0xF7)

Supported functions	The following methods are supported: ▪ Restart ▪ ENP Restart ▪ Diagnostic ▪ Set to OOS ▪ Set to AUTO ▪ Read trend data ▪ Read event logbook
Virtual Communication Relationships (VCRs)	
Number of VCRs	44
Number of link objects in VFD	50
Permanent entries	1
Client VCRs	0
Server VCRs	10
Source VCRs	43
Sink VCRs	0
Subscriber VCRs	43
Publisher VCRs	43
Device Link Capabilities	
Slot time	4
Min. delay between PDU	8
Max. response delay	16
System integration	Information regarding system integration: Operating Instructions → 127. ▪ Cyclic data transmission ▪ Description of the modules ▪ Execution times ▪ Methods

PROFIBUS DP

Manufacturer ID	0x11
Ident number	0x1570
Profile version	3.02
Device description files (GSD, DTM, DD)	Information and files under: ▪ https://www.endress.com/download On the device product page: PRODUCTS → Product Finder → Links ▪ https://www.profibus.com
Supported functions	▪ Identification & Maintenance Simplest device identification on the part of the control system and nameplate ▪ PROFIBUS upload/download Reading and writing parameters is up to ten times faster with PROFIBUS upload/download ▪ Condensed status Simplest and self-explanatory diagnostic information by categorizing diagnostic messages that occur
Configuration of the device address	▪ DIP switches on the I/O electronics module ▪ Via operating tools (e.g. FieldCare)

Compatibility with earlier model	If the device is replaced, the measuring device Promag 300 supports the compatibility of the cyclic data with previous models. It is not necessary to adjust the engineering parameters of the PROFIBUS network with the Promag 300 GSD file.
	Earlier models:
	▪ Promag 50 PROFIBUS DP
	  ▪ ID No.: 1546 (hex)
	  ▪ Extended GSD file: EH3x1546.gsd
	  ▪ Standard GSD file: EH3_1546.gsd
	▪ Promag 53 PROFIBUS DP
	  ▪ ID No.: 1526 (hex)
	  ▪ Extended GSD file: EH3x1526.gsd
	  ▪ Standard GSD file: EH3_1526.gsd
	Description of the function scope of compatibility: Operating Instructions → 127.

System integration	Information regarding system integration: Operating Instructions → 127. ▪ Cyclic data transmission ▪ Block model ▪ Description of the modules

PROFIBUS PA

Manufacturer ID	0x11
Ident number	0x156C
Profile version	3.02
Device description files (GSD, DTM, DD)	Information and files under: ▪ https://www.endress.com/download On the device product page: PRODUCTS → Product Finder → Links ▪ https://www.profibus.com
Supported functions	▪ Identification & Maintenance Simplest device identification on the part of the control system and nameplate ▪ PROFIBUS upload/download Reading and writing parameters is up to ten times faster with PROFIBUS upload/download ▪ Condensed status Simplest and self-explanatory diagnostic information by categorizing diagnostic messages that occur
Configuration of the device address	▪ DIP switches on the I/O electronics module ▪ Local display ▪ Via operating tools (e.g. FieldCare)

Compatibility with earlier model	If the device is replaced, the measuring device Promag 300 supports the compatibility of the cyclic data with previous models. It is not necessary to adjust the engineering parameters of the PROFIBUS network with the Promag 300 GSD file.
	Earlier models:
	▪ Promag 50 PROFIBUS PA
	  ▪ ID No.: 1525 (hex)
	  ▪ Extended GSD file: EH3x1525.gsd
	  ▪ Standard GSD file: EH3_1525.gsd
	▪ Promag 53 PROFIBUS PA
	  ▪ ID No.: 1527 (hex)
	  ▪ Extended GSD file: EH3x1527.gsd
	  ▪ Standard GSD file: EH3_1527.gsd
	Description of the function scope of compatibility: Operating Instructions → 127.

System integration	Information regarding system integration: Operating Instructions → 127. ▪ Cyclic data transmission ▪ Block model ▪ Description of the modules

Modbus RS485

Protocol	Modbus Applications Protocol Specification V1.1
Response times	▪ Direct data access: typically 25 to 50 ms ▪ Auto-scan buffer (data range): typically 3 to 5 ms
Device type	Slave
Slave address range	1 to 247
Broadcast address range	0
Function codes	▪ 03: Read holding register ▪ 04: Read input register ▪ 06: Write single registers ▪ 08: Diagnostics ▪ 16: Write multiple registers ▪ 23: Read/write multiple registers
Broadcast messages	Supported by the following function codes: ▪ 06: Write single registers ▪ 16: Write multiple registers ▪ 23: Read/write multiple registers
Supported baud rate	▪ 1200 BAUD ▪ 2400 BAUD ▪ 4800 BAUD ▪ 9600 BAUD ▪ 19200 BAUD ▪ 38400 BAUD ▪ 57600 BAUD ▪ 115200 BAUD
Data transmission mode	▪ ASCII ▪ RTU
Data access	Each device parameter can be accessed via Modbus RS485. For Modbus register information
Compatibility with earlier model	If the device is replaced, the measuring instrument Promag 300 supports the compatibility of the Modbus registers for the process variables and the diagnostic information with the previous model Promag 53. It is not necessary to change the engineering parameters in the automation system. Description of the function scope of compatibility: Operating Instructions → 127.
System integration	Information regarding system integration: Operating Instructions → 127. ▪ Modbus RS485 information ▪ Function codes ▪ Register information ▪ Response time ▪ Modbus data map

Modbus TCP over Ethernet-APL

Port 1: Modbus TCP over Ethernet-APL 10 Mbit/s, SPE 10 Mbit/s	
Protocol	▪ Modbus application protocol V1.1 ▪ TCP
Response times	On Modbus client request: Typically 3 to 5 ms
TCP port	502
Modbus TCP connections	Maximum 4
Communication type	Ethernet Advanced Physical Layer 10BASE-T1L
Data transfer	Full-duplex
Polarity	Automatic correction of crossed "APL signal + " and "APL signal -" signal lines
Device type	Address

Device type ID	0xC43C
Function codes	▪ 03: Read holding register ▪ 04: Read input register ▪ 06: Write single registers ▪ 16: Write multiple registers ▪ 23: Read/write multiple registers ▪ 43: Read device identification
Broadcast support for function codes	▪ 06: Write single registers ▪ 16: Write multiple registers ▪ 23: Read/write multiple registers ▪ 43: Read device identification
Supported transfer speed	10 Mbit/s (Ethernet-APL)
Supported features	Address can be configured using DHCP, web server or software
Device description files (FDI)	Information and files available at: www.endress.com → Downloads area
Configuration options for measuring instrument	▪ Asset management software (FieldCare, DeviceCare, Field Expert) ▪ Integrated web server via web browser and IP address ▪ Onsite operation
Supported functions	▪ Device identification using: Nameplate ▪ Measured value status The process variables are communicated with a measured value status ▪ Blinking feature via the local display for simple device identification and assignment ▪ Device operation via asset management software (e.g. FieldCare, DeviceCare)
System integration	Information regarding system integration: Operating Instructions → 127. ▪ Overview and description of the supported function codes ▪ Status coding ▪ Factory setting

Port 2: Modbus TCP over Ethernet 100 Mbit/s	
Protocol	▪ Modbus application protocol V1.1 ▪ TCP
Response times	On Modbus client request: Typically 3 to 5 ms
TCP port	502
Modbus TCP connections	Maximum 4
Communication type	▪ 10BASE-T ▪ 100BASE-TX
Data transfer	Half-duplex, full-duplex
Polarity	Auto-MDIX
Device type	Address
Device type ID	0xC43C
Function codes	▪ 03: Read holding register ▪ 04: Read input register ▪ 06: Write single registers ▪ 16: Write multiple registers ▪ 23: Read/write multiple registers ▪ 43: Read device identification
Broadcast support for function codes	▪ 06: Write single registers ▪ 16: Write multiple registers ▪ 23: Read/write multiple registers ▪ 43: Read device identification
Supported transfer speed	▪ 10 Mbit/s ▪ 100 Mbit/s (Fast-Ethernet)

Supported features	Address can be configured using DHCP, web server or software
Device description files (FDI)	Information and files available at: www.endress.com → Downloads area
Configuration options for measuring instrument	▪ Asset management software (FieldCare, DeviceCare, Field Expert) ▪ Integrated web server via web browser and IP address ▪ Onsite operation
Supported functions	▪ Device identification using: Nameplate ▪ Measured value status The process variables are communicated with a measured value status ▪ Device operation via asset management software (e.g. FieldCare, DeviceCare)
System integration	Information regarding system integration: Operating Instructions → 127. ▪ Overview and description of the supported function codes ▪ Status coding ▪ Factory setting

EtherNet/IP

Protocol	▪ The CIP Networks Library Volume 1: Common Industrial Protocol ▪ The CIP Networks Library Volume 2: EtherNet/IP Adaptation of CIP
Communication type	▪ 10Base-T ▪ 100Base-TX
Device profile	Generic device (product type: 0x2B)
Manufacturer ID	0x000049E
Device type ID	0x103C
Baud rates	Automatic $^{10}/_{100}$ Mbit with half-duplex and full-duplex detection
Polarity	Auto-polarity for automatic correction of crossed TxD and RxD pairs
Supported CIP connections	Max. 3 connections
Explicit connections	Max. 6 connections
I/O connections	Max. 6 connections (scanner)
Configuration options for measuring device	▪ DIP switches on the electronics module for IP addressing ▪ Manufacturer-specific software (FieldCare) ▪ Add-on Profile Level 3 for Rockwell Automation control systems ▪ Web browser ▪ Electronic Data Sheet (EDS) integrated in the measuring device
Configuration of the EtherNet interface	▪ Speed: 10 MBit, 100 MBit, auto (factory setting) ▪ Duplex: half-duplex, full-duplex, auto (factory setting)
Configuration of the device address	▪ DIP switches on the electronics module for IP addressing (last octet) ▪ DHCP ▪ Manufacturer-specific software (FieldCare) ▪ Add-on Profile Level 3 for Rockwell Automation control systems ▪ Web browser ▪ EtherNet/IP tools, e.g. RSLinx (Rockwell Automation)
Device Level Ring (DLR)	Yes
System integration	Information regarding system integration: Operating Instructions → 127. ▪ Cyclic data transmission ▪ Block model ▪ Input and output groups

PROFINET

Protocol	Application layer protocol for decentral device periphery and distributed automation, Version 2.3
Communication type	100 Mbit/s
Conformity class	Conformance class B
Netload Class	Netload Class 2 100 Mbit/s
Baud rates	Automatic 100 Mbit/s with full-duplex detection
Periods	From 8 ms
Polarity	Auto-polarity for automatic correction of crossed TxD and RxD pairs
Media Redundancy Protocol (MRP)	Yes
System redundancy support	System redundancy S2 (2 AR with 1 NAP)
Device profile	Application interface identifier 0xF600 Generic device
Manufacturer ID	0x11
Device type ID	0x843C
Device description files (GSD, DTM, DD)	Information and files available at: ▪ www.endress.com On the product page for the device: Documents/Software → Device drivers ▪ www.profibus.com
Supported connections	▪ 2 x AR (IO Controller AR) ▪ 1 x AR (IO-Supervisor Device AR connection allowed) ▪ 1 x Input CR (Communication Relation) ▪ 1 x Output CR (Communication Relation) ▪ 1 x Alarm CR (Communication Relation)
Configuration options for measuring instrument	▪ DIP switches on the electronics module, for device name assignment (last part) ▪ Asset management software (FieldCare, DeviceCare, Field Xpert) ▪ Integrated web server via web browser and IP address ▪ Device master file (GSD), can be read out via the integrated web server of the measuring instrument. ▪ Onsite operation
Configuration of the device name	▪ DIP switches on the electronics module, for device name assignment (last part) ▪ DCP protocol ▪ Asset management software (FieldCare, DeviceCare, Field Xpert) ▪ Integrated web server

Supported functions	▪ Identification & Maintenance, simple device identifier via:
	  ▪ Control system
	  ▪ Nameplate
	▪ Measured value status
	The process variables are communicated with a measured value status
	▪ Blinking feature via the local display for simple device identification and assignment
	▪ Device operation via asset management software (e.g. FieldCare, DeviceCare, SIMATIC PDM)

System integration	Information regarding system integration: Operating Instructions → 🖹 127. ▪ Cyclic data transmission ▪ Overview and description of the modules ▪ Status coding ▪ Startup configuration ▪ Factory setting

PROFINET over Ethernet-APL

Protocol	Application layer protocol for decentral device periphery and distributed automation, Version 2.43
Communication type	Ethernet Advanced Physical Layer 10BASE-T1L
Conformance Class	Conformance Class B (PA)
Netload Class	PROFINET Netload Robustness Class 2 10 Mbit/s
Data transfer	10 Mbit/s Full-duplex
Cycle times	64 ms
Polarity	Automatic correction of crossed "APL signal +" and "APL signal -" signal lines
Media Redundancy Protocol (MRP)	Not possible (point-to-point connection to APL field switch)
System redundancy support	System redundancy S2 (2 AR with 1 NAP)
Device profile	PROFINET PA profile 4.02 (Application interface identifier API: 0x9700)
Manufacturer ID	17
Device type ID	0xA43C
Device description files (GSD, DTM, FDI)	Information and files available at: ▪ www.endress.com → Downloads area ▪ www.profibus.com
Supported connections	▪ 2x AR (IO Controller AR) ▪ 2x AR (IO Supervisor Device AR connection allowed)
Configuration options for measuring instrument	▪ DIP switches on the electronics module, for device name assignment (last part) ▪ Asset management software (FieldCare, DeviceCare, Field Xpert) ▪ Integrated Web server via Web browser and IP address ▪ Device master file (GSD), can be read out via the integrated Web server of the measuring instrument. ▪ Onsite operation
Configuration of the device name	▪ DIP switches on the electronics module, for device name assignment (last part) ▪ DCP protocol ▪ Asset management software (FieldCare, DeviceCare, Field Xpert) ▪ Integrated web server

Supported functions	▪ Identification & Maintenance, simple device identifier via:
	  ▪ Control system
	  ▪ Nameplate
	▪ Measured value status
	The process variables are communicated with a measured value status
	▪ Blinking feature via the local display for simple device identification and assignment
	▪ Device operation via asset management software (e.g. FieldCare, DeviceCare, SIMATIC PDM with FDI package)

System integration	Information regarding system integration: Operating Instructions → 127. ▪ Cyclic data transmission ▪ Overview and description of the modules ▪ Status coding ▪ Factory setting

Power supply

Terminal assignment **Transmitter: supply voltage, input/outputs**

HART

Supply voltage		Input/output 1 (port 1)		Input/output 2		Input/output 3		Service interface (Port 2)
1 (+)	2 (–)	26 (+)	27 (-)	24 (+)	25 (–)	22 (+)	23 (–)	CDI-RJ45
				The terminal assignment depends on the specific device version ordered → 16.				

FOUNDATION fieldbus

Supply voltage		Input/output 1 (port 1)		Input/output 2		Input/output 3		Service interface (Port 2)
1 (+)	2 (–)	26 (A)	27 (B)	24 (+)	25 (–)	22 (+)	23 (–)	CDI-RJ45
				The terminal assignment depends on the specific device version ordered → 16.				

PROFIBUS DP

Supply voltage		Input/output 1 (port 1)		Input/output 2		Input/output 3		Service interface (Port 2)
1 (+)	2 (–)	26 (B)	27 (A)	24 (+)	25 (–)	22 (+)	23 (–)	CDI-RJ45
				The terminal assignment depends on the specific device version ordered → 16.				

PROFIBUS PA

Supply voltage		Input/output 1 (port 1)		Input/output 2		Input/output 3		Service interface (Port 2)
1 (+)	2 (–)	26 (B)	27 (A)	24 (+)	25 (–)	22 (+)	23 (–)	CDI-RJ45
				The terminal assignment depends on the specific device version ordered → 16.				

Modbus RS485

Supply voltage		Input/output 1 (port 1)		Input/output 2		Input/output 3		Service interface (Port 2)
1 (+)	2 (–)	26 (B)	27 (A)	24 (+)	25 (–)	22 (+)	23 (–)	CDI-RJ45
				The terminal assignment depends on the specific device version ordered → 16.				

Modbus TCP

Supply voltage		Input/output 1 (Port 1 [1])		Input/output 2		Input/output 3		Service interface (Port 2) [1]
1 (+)	2 (–)	26 (+)	27 (-)	24 (+)	25 (–)	22 (+)	23 (–)	CDI-RJ45
				The terminal assignment depends on the specific device version ordered → 16.				

1) For Modbus TCP communication, either port 1 OR port 2 can be used.

PROFINET

Supply voltage		Input/output 1 (port 1) [1]		Input/output 2		Input/output 3		Service interface (Port 2) [1]
1 (+)	2 (–)	RJ45		24 (+)	25 (–)	22 (+)	23 (–)	CDI-RJ45
				The terminal assignment depends on the specific device version ordered → 16.				

1) Port can be used for communication or as a service interface (CDI-RJ45).

PROFINET over Ethernet-APL

Supply voltage		Input/output 1 (port 1)		Input/output 2		Input/output 3		Service interface (Port 2 [1])
1 (+)	2 (–)	26 (+)	27 (-)	24 (+)	25 (–)	22 (+)	23 (–)	CDI-RJ45
				The terminal assignment depends on the specific device version ordered → 16.				

1) No PROFINET communication available on port 2

Ethernet/IP

Supply voltage		Input/output 1 (port 1) [1]		Input/output 2		Input/output 3		Service interface (Port 2) [1]
1 (+)	2 (–)	RJ45		24 (+)	25 (–)	22 (+)	23 (–)	CDI-RJ45
				The terminal assignment depends on the specific device version ordered → 16.				

1) Port can be used for communication or as a service interface (CDI-RJ45).

Terminal assignment of the remote display and operating module → 41.

Available device plugs

Device plugs may not be used in hazardous areas!

Device plugs for Proline 300:
Order code for "Input; output 1"
- Option **SA** "FOUNDATION fieldbus" → 38
- Option **GA** "PROFIBUS PA" → 39
- Option **NA** "Ethernet/IP" → 39
- Option **RA** "PROFINET" → 39
- Option **RB** "PROFINET over Ethernet-APL" → 39
- Option **MB** "Modbus TCP" → 39

Device plug for connecting to the service interface:
Order code for "Accessory mounted"
Option **NB**, RJ45 M12 adapter (service interface) → 52

Order code for "Input; output 1", option SA "FOUNDATION fieldbus"

Order code for "Electrical connection"	Cable entry/connection → 41	
	2	3
M, 3, 4, 5	7/8" plug	–

Order code for "Input; output 1", option GA "PROFIBUS PA"

Order code for "Electrical connection"	Cable entry/connection → 🖹 41	
	2	3
L, N, P, U	Connector M12×1	–

Order code for "Input; output 1", option NA "Ethernet/IP"

Order code for "Electrical connection"	Cable entry/connection → 🖹 41	
	2	3
L, N, P, U	Connector M12×1	–
R [1) 2)], S [1) 2)], T [1) 2)], V [1) 2)]	Connector M12×1	Connector M12×1

1) Not compatible with an external WLAN antenna (order code for "Accessory enclosed", option P8), an RJ45 M12 adapter for the service interface (order code for "Accessory mounted", option NB)
2) Suitable for integrating the device into a ring topology.

Order code for "Input; output 1", option RA "PROFINET"

Order code for "Electrical connection"	Cable entry/connection → 🖹 41	
	2	3
L, N, P, U	Connector M12×1	–
R [1) 2)], S [1) 2)], T [1) 2)], V [1) 2)]	Connector M12×1	Connector M12×1

1) Not compatible with an external WLAN antenna (order code for "Accessory enclosed", option P8), an RJ45 M12 adapter for the service interface (order code for "Accessory mounted", option NB)
2) Suitable for integrating the device into a ring topology.

Order code for "Input; output 1", option RB "PROFINET over Ethernet-APL"

Order code for "Electrical connection"	Cable entry/connection → 🖹 41	
	2	3
L, N, P, U	Connector M12×1	–

Order code for "Input; output 1", option MB "Modbus TCP over Ethernet-APL"

Order code for "Electrical connection"	Accessories	Cable entry/connection → 🖹 40	
		2	3
L, N, P, U	-	Connector M12×1 A-coded	–
L, N, P, U	NB [1)]	Connector M12×1 A-coded	Connector M12×1 [1)] D-coded
1 [2)], 2 [2)], 7 [2)], 8 [2)]	–	–	Connector M12×1 D-coded

1) Cannot be used as a Modbus TCP port.
2) Not compatible with an external WLAN antenna (order code for "Accessory enclosed", option P8, an RJ45 M12 adapter for the service interface (order code for "Accessory mounted", option NB) or a remote operating and display module DKX001.

Order code for "Accessory mounted", option NB: "Adapter RJ45 M12 (service interface)"

Order code for "Accessory mounted"	Cable entry/connection → 🖹 40	
	Cable entry 2	Cable entry 3
NB [1]	–	Connector M12×1

1) Not compatible with electrical connection option 1, 2, 7, 8

Supply voltage

Order code for "Power supply"	Terminal voltage		Frequency range
Option **D**	DC 24 V	±20%	–
Option **E**	AC 100 to 240 V	−15 to 10%	50/60 Hz, ±4 Hz
Option **I**	DC 24 V	±20%	–
	AC 100 to 240 V	−15 to 10%	50/60 Hz, ±4 Hz

Power consumption

Transmitter

Max. 10 W (active power)

switch-on current	Max. 36 A (<5 ms) as per NAMUR Recommendation NE 21

Current consumption

Transmitter

- Max. 400 mA (24 V)
- Max. 200 mA (110 V, 50/60 Hz; 230 V, 50/60 Hz)

Power supply failure

- Totalizers stop at the last value measured.
- Depending on the device version, the configuration is retained in the device memory or in the plug-in memory (HistoROM DAT).
- Error messages (incl. total operated hours) are stored.

Overcurrent protection element

The device must be operated with a dedicated circuit breaker, as it does not have an ON/OFF switch of its own.

- The circuit breaker must be easy to reach and labeled accordingly.
- Permitted nominal current of the circuit breaker: 2 A up to maximum 10 A.

Electrical connection

Terminal connection for transmitter

- Terminal assignment→ 🖹 37
- Device plugs available→ 🖹 38

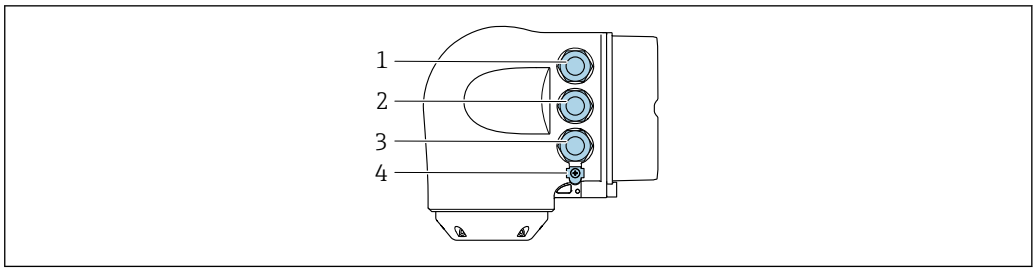

A0026781

1 *Terminal connection for supply voltage*
2 *Terminal connection for signal transmission, input/output*
3 *Terminal connection for signal transmission, input/output or terminal for network connection via service interface (CDI-RJ45); Optional: terminal connection for external WLAN antenna or connection for remote display and operating module DKX001*
4 *Terminal connection for potential equalization (PE)*

An adapter for the RJ45 to the M12 plug is optionally available:
Order code for "Accessories", option **NB**: "Adapter RJ45 M12 (service interface)"

The adapter connects the service interface (CDI-RJ45) to an M12 plug mounted in the cable entry. The connection to the service interface can thus be established via an M12 plug without opening the device.

Network connection via service interface (CDI-RJ45) → 🖹 116

Connecting in a ring topology

Device versions with EtherNet/IP and PROFINET communication protocols can be integrated into a ring topology. The device is integrated via the terminal connection for signal transmission (output 1) and the connection to the service interface (CDI-RJ45).

Integrate the transmitter into a ring topology:
- Ethernet/IP
- PROFINET

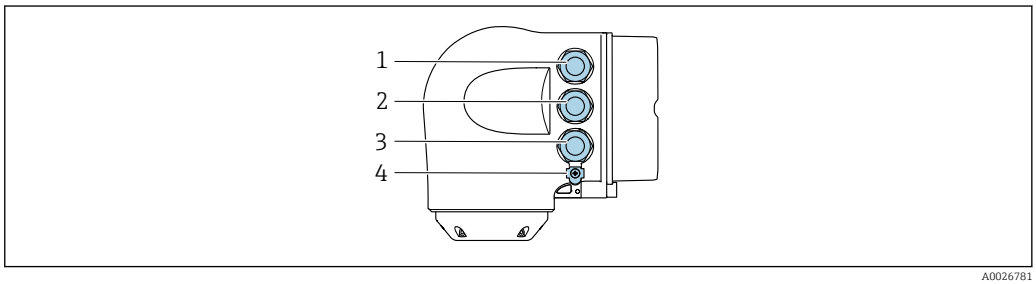

A0026781

1 *Terminal connection for supply voltage*
2 *Terminal connection for signal transmission: PROFINET or Ethernet/IP (RJ45 plug)*
3 *Terminal connection to service interface (CDI-RJ45)*
4 *Terminal connection for potential equalization (PE)*

If the device has additional inputs/outputs, these are routed in parallel via the cable entry for connection to the service interface.

Connecting the remote display and operating module DKX001

The remote display and operating module DKX001 is available as an optional extra → 🖹 124..

- The measuring instrument is always supplied with a dummy cover when the remote display and operating module DKX001 is ordered directly with the measuring instrument. Display or operation at the transmitter is not possible in this case.
- If ordered subsequently, the remote display and operating module DKX001 may not be connected at the same time as the existing measuring instrument display module. Only one display or operation unit may be connected to the transmitter at any one time.

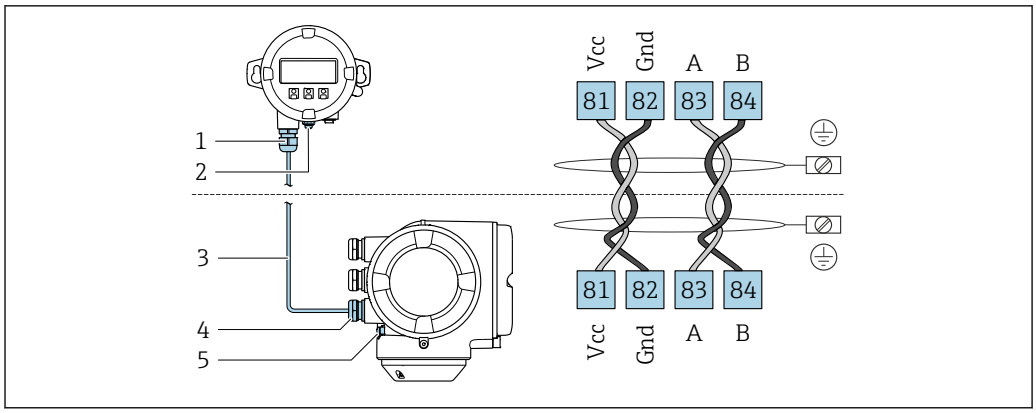

A0027518

1 Remote display and operating module DKX001
2 Terminal connection for potential equalization (PE)
3 Connecting cable
4 Measuring instrument
5 Terminal connection for potential equalization (PE)

Connection examples

Current output 4 to 20 mA (without HART)

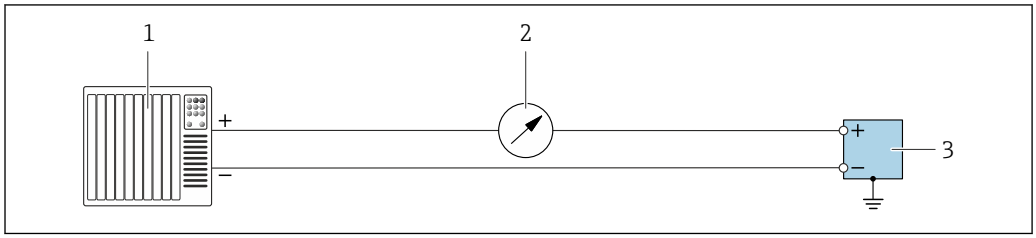

A0055851

2 Connection example for 4 to 20 mA current output (active)

1 Automation system with current input (e.g. PLC)
2 Optional additional display unit: Observe maximum load
3 Flowmeter with current output (active)

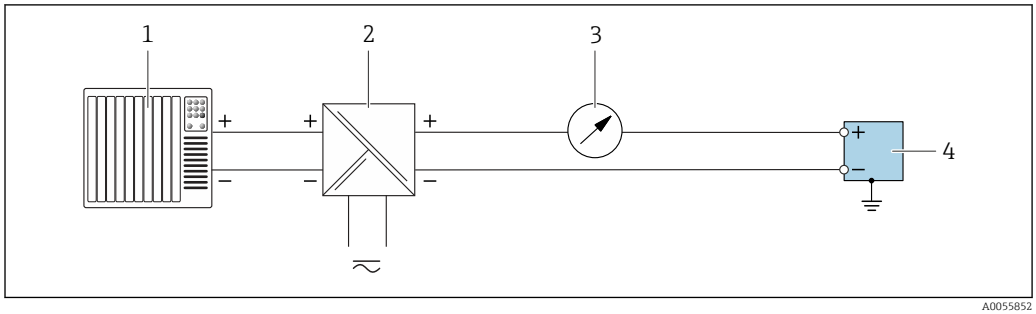

A0055852

3 Connection example for 4 to 20 mA current output (passive)

1 Automation system with current input (e.g. PLC)
2 Power supply
3 Optional additional display unit: Observe maximum load
4 Transmitter with current output (passive)

Current input 4 to 20 mA

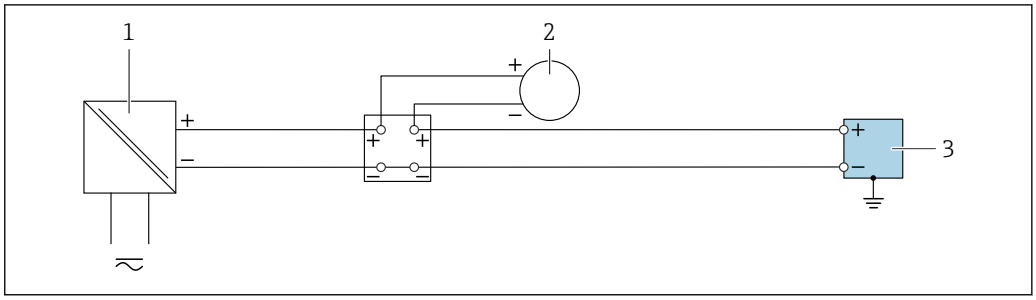

4 *Connection example for 4 to 20 mA current input*

1 *Power supply*
2 *External measuring instrument with 4 to 20 mA passive current output. e.g. pressure or temperature)*
3 *Transmitter with 4 to 20 mA current input*

Pulse output/frequency output/switch output

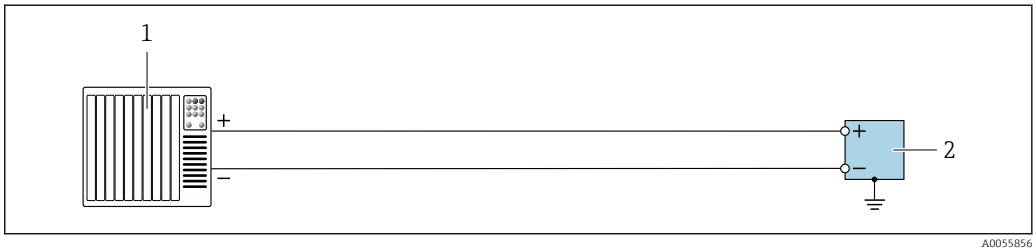

5 *Connection example for pulse output/frequency output/switch output (active)*

1 *Automation system with pulse input/frequency input/switch input (e.g. PLC)*
2 *Transmitter with pulse output/frequency output/switch output (active)*

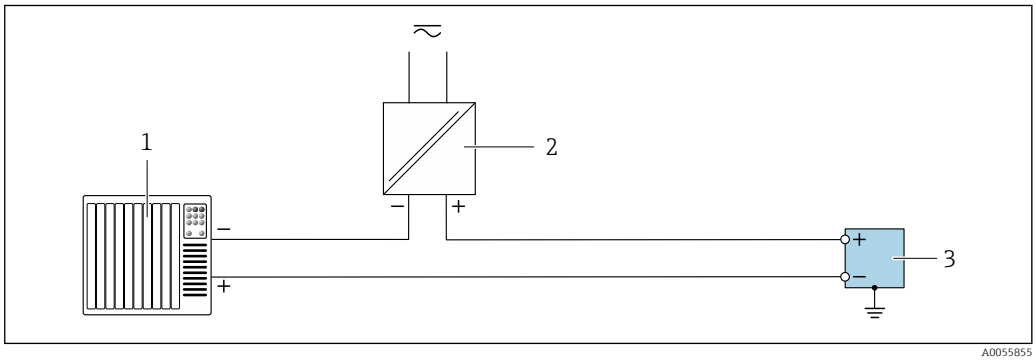

6 *Connection example for pulse output/frequency output/switch output (passive)*

1 *Automation system with pulse input/frequency input/switch input (e.g. PLC)*
2 *Power supply*
3 *Transmitter with pulse output/frequency output/switch output (passive)*

Relay output

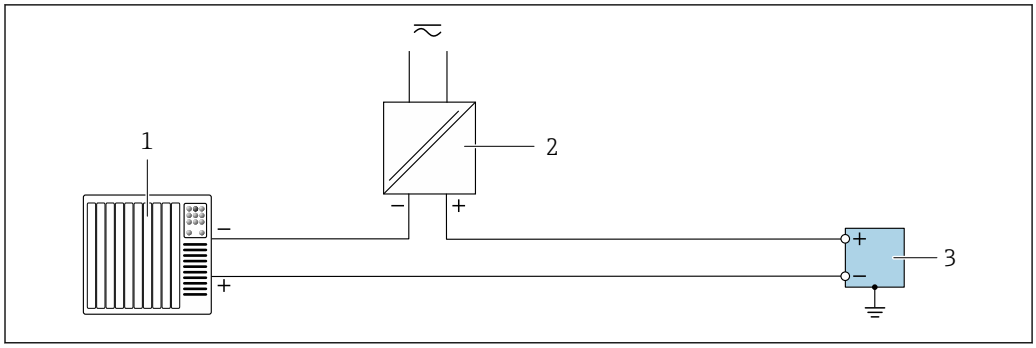

7 Connection example for relay output

1 Automation system with switch input (e.g. PLC)
2 Power supply
3 Transmitter with relay output

Status input

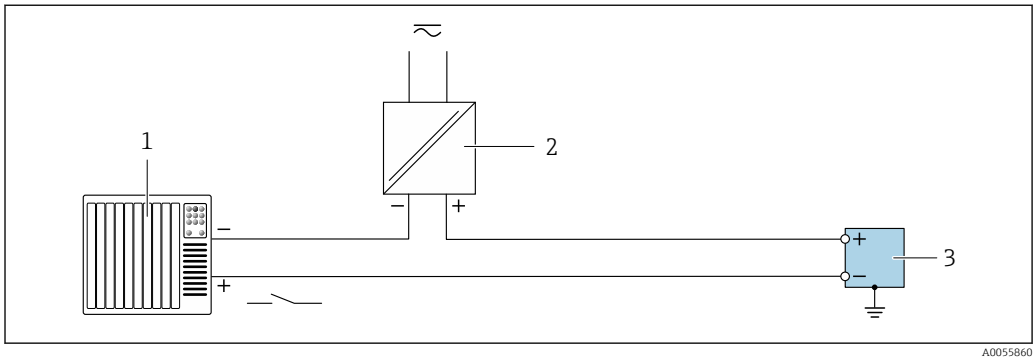

8 Connection example for status input

1 Automation system with switch output passive e.g. PLC)
2 Power supply
3 Transmitter with status input

Current output 4 to 20 mA HART

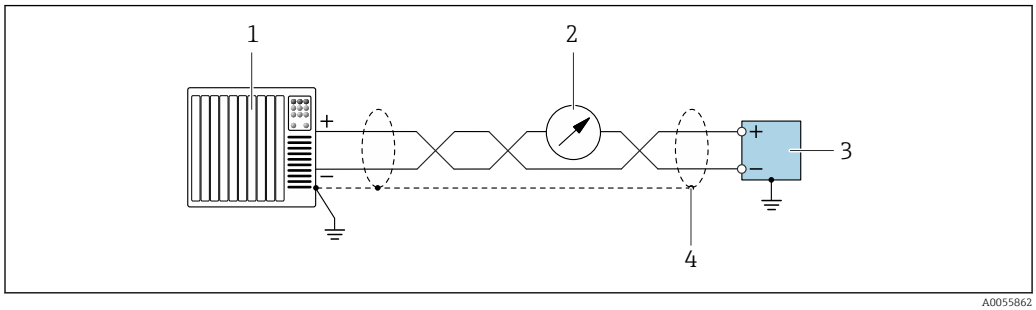

9 Connection example for 4 to 20 mA current output with HART (active)

1 Automation system with 4 to 20 mA current input with HART (e.g. PLC)
2 Optional display unit: Note maximum load
3 Transmitter with 4 to 20 mA current output with HART (active)
4 Ground cable shield at one end. For installations in compliance with NAMUR NE 89, grounding of the cable shield on both sides is required.

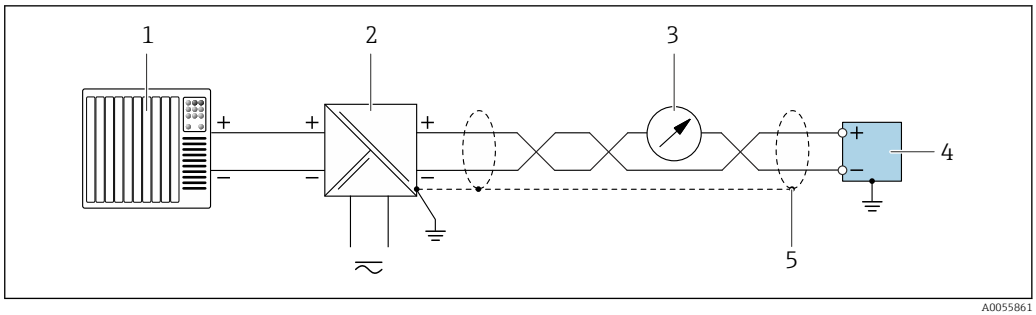

10 *Connection example for 4 to 20 mA current output with HART (passive)*

1 *Automation system with 4 to 20 mA current input with HART (e.g. PLC)*
2 *Power supply*
3 *Optional display unit: Note maximum load*
4 *Transmitter with 4 to 20 mA current output with HART (passive)*
5 *Ground cable shield at one end. For installations in compliance with NAMUR NE 89, grounding of the cable shield on both sides is required.*

Modbus RS485

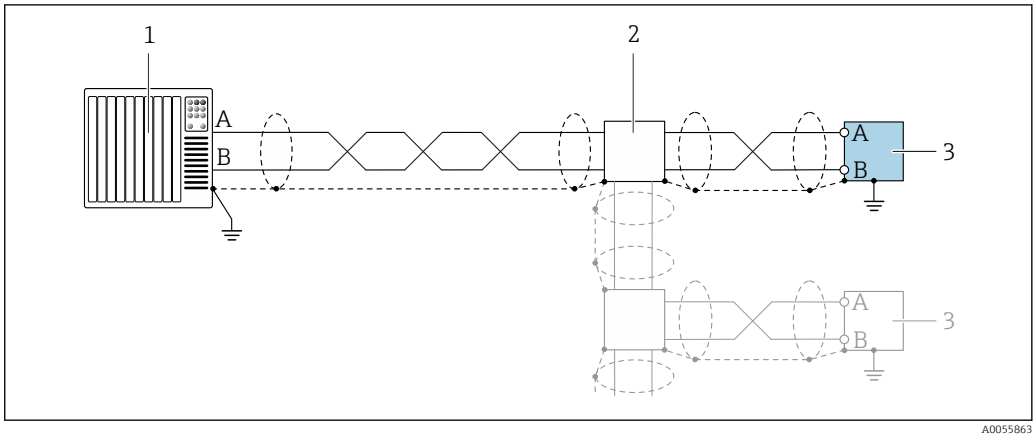

11 *Connection example for Modbus RS485*

1 *Automation system with Modbus master (e.g. PLC)*
2 *Optional distribution box*
3 *Transmitter with Modbus RS485*

PROFIBUS PA

See https://www.profibus.com "PROFIBUS Installation Guidelines".

PROFIBUS DP

See https://www.profibus.com "PROFIBUS Installation Guidelines".

FOUNDATION Fieldbus

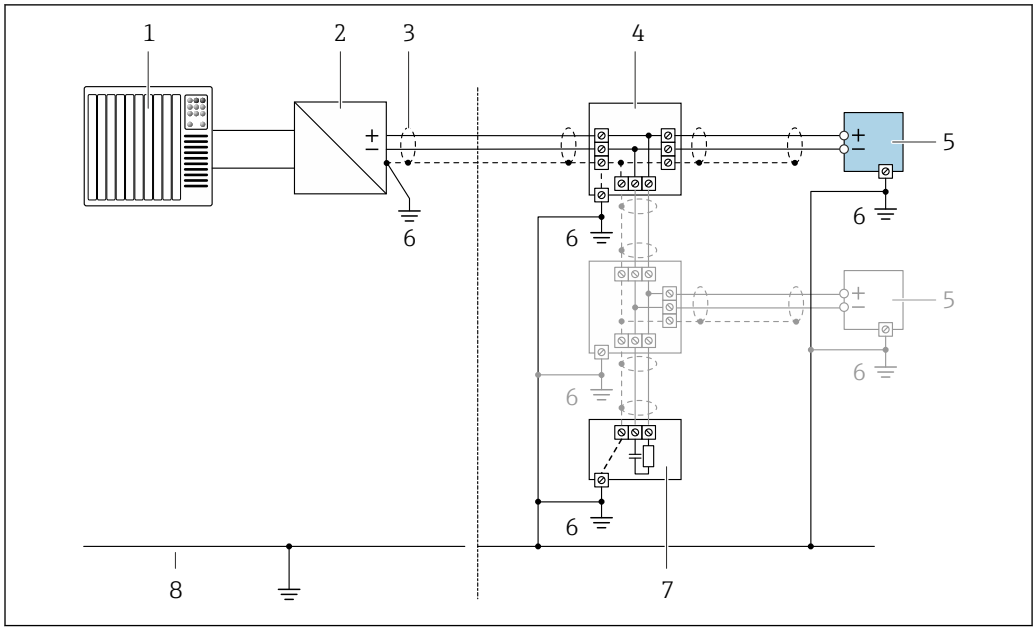

12 Connection example for FOUNDATION Fieldbus

1 *Automation system (e.g. PLC)*
2 *Power Conditioner (FOUNDATION Fieldbus)*
3 *Cable shield provided at one end. The cable shield must be grounded at both ends to comply with EMC requirements; observe cable specifications*
4 *T-box*
5 *Measuring instrument*
6 *Local grounding*
7 *Bus terminator*
8 *Potential equalization conductor*

PROFINET

See https://www.profibus.com "PROFINET Planning guideline".

EtherNet/IP

See https://www.odva.org"EtherNet/IP Media Planning & Installation Manual".

Ethernet-APL

See https://www.profibus.com Ethernet-APL White Paper "

Potential equalization

Introduction

Correct potential equalization (equipotential bonding) is a prerequisite for stable and reliable flow measurement. Inadequate or incorrect potential equalization can result in device failure and present a safety hazard.

The following requirements must be observed to ensure correct, trouble-free measurement:
- The principle that the medium, the sensor and the transmitter must be at the same electric potential applies.
- Take in-company grounding guidelines, materials and the grounding conditions and potential conditions of the pipe into consideration.
- The necessary potential equalization connections must be established using a ground cable with a minimum cross-section of 6 mm^2 (0.0093 in^2) and a cable lug.
- In the case of remote device versions, the ground terminal in the example always refers to the sensor and not to the transmitter.

You can order accessories such as ground cables and ground disks from Endress+Hauser.
→ 124

For devices intended for use in hazardous areas, observe the instructions in the Ex documentation (XA).

Abbreviations used
- PE (Protective Earth): potential at the protective earth terminals of the device
- P_P (Potential Pipe): potential of the pipe, measured at the flanges
- P_M (Potential Medium): potential of the medium

Connection examples for standard situations

Unlined and grounded metal pipe

- Potential equalization is via the measuring tube.
- The medium is set to ground potential.

Starting conditions:
- Pipes are correctly grounded on both sides.
- Pipes are conductive and at the same electric potential as the medium

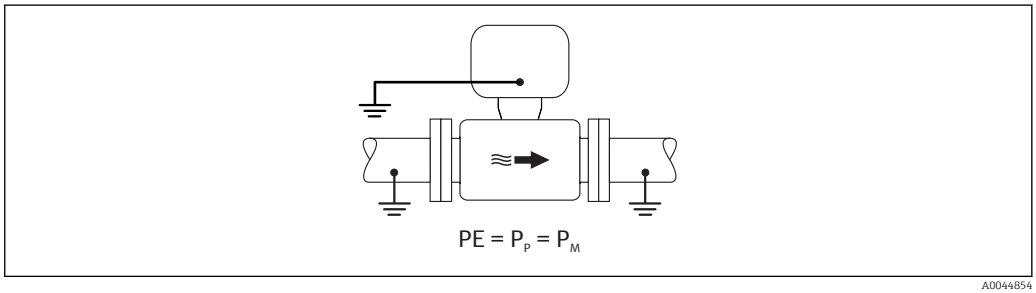

A0044854

► Connect the connection housing of the transmitter or sensor to ground potential via the ground terminal provided for this purpose.

Metal pipe without liner

- Potential equalization is via the ground terminal and pipe flanges.
- The medium is set to ground potential.

Starting conditions:
- Pipes are not sufficiently grounded.
- Pipes are conductive and at the same electric potential as the medium

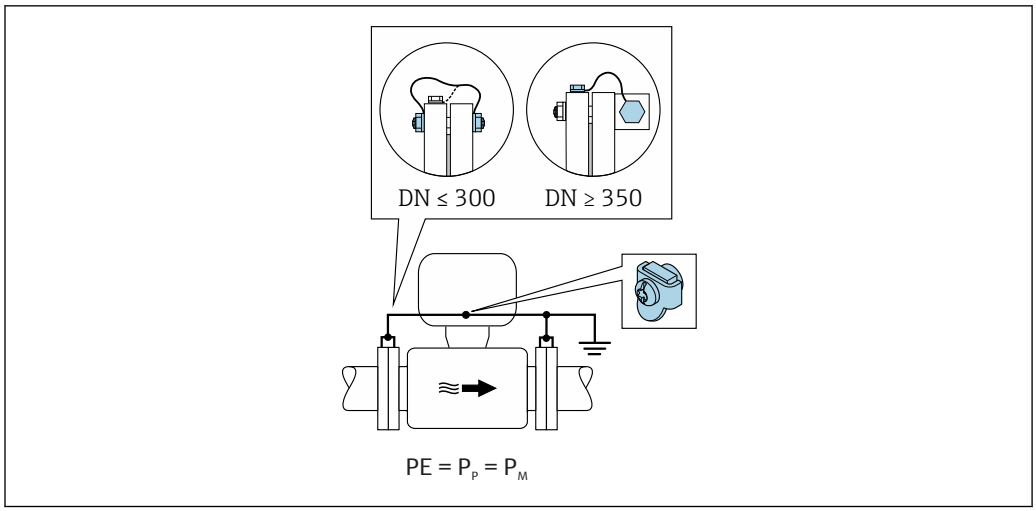

A0042089

1. Connect both sensor flanges to the pipe flange via a ground cable and ground them.
2. Connect the connection housing of the transmitter or sensor to ground potential via the ground terminal provided for this purpose.
3. For DN ≤ 300 (12"): Mount the ground cable directly on the conductive flange coating of the sensor with the flange screws.
4. For DN ≥ 350 (14"): Mount the ground cable directly on the metal transport bracket. Observe the screw tightening torques: see the Brief Operating Instructions for the sensor.

Plastic pipe or pipe with insulating liner

- Potential equalization is via the ground terminal and ground disks.
- The medium is set to ground potential.

Starting conditions:
- The pipe has an insulating effect.
- Low-impedance medium grounding close to the sensor is not guaranteed.
- Equalizing currents through the medium cannot be ruled out.

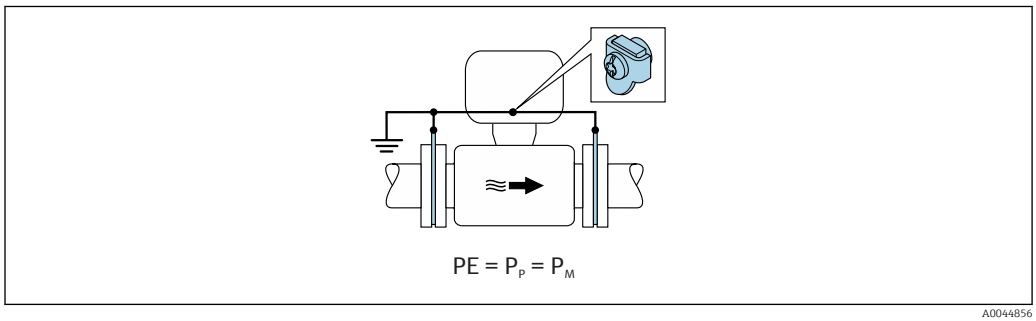

A0044856

1. Connect the ground disks to the ground terminal of the transmitter or sensor connection housing via the ground cable.
2. Connect the connection to ground potential.

Connection example with the potential of medium not equal to protective ground without the "Floating measurement" option

In these cases, the medium potential can differ from the potential of the device.

Metal, ungrounded pipe

The sensor and transmitter are installed in a way that provides electrical insulation from PE, e.g. applications for electrolytic processes or systems with cathodic protection.

Starting conditions:
- Unlined metal pipe
- Pipes with an electrically conductive liner

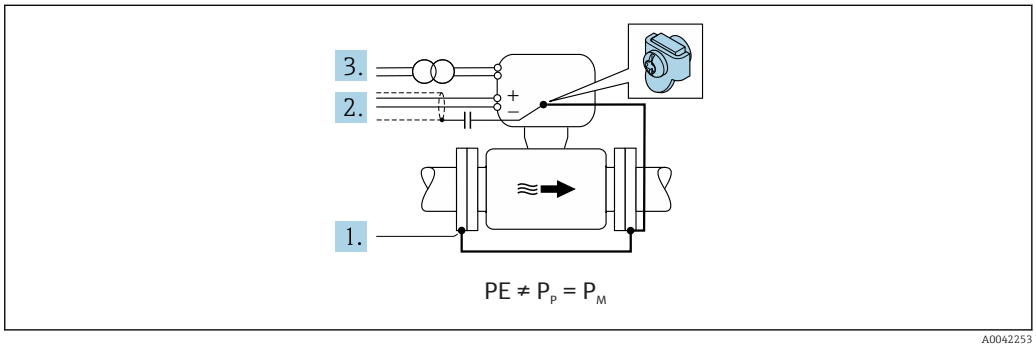

1. Connect the pipe flanges and transmitter via the ground cable.
2. Route the shielding of the signal lines via a capacitor (recommended value 1.5µF/50V).
3. Device connected to power supply such that it is floating in relation to the protective earth (isolation transformer). This measure is not required in the case of 24V DC supply voltage without PE (= SELV power unit).

Connection examples with the potential of medium not equal to protective ground with the "Floating measurement" option

In these cases, the medium potential can differ from the potential of the device.

Introduction

The "Floating measurement" option enables the galvanic isolation of the measuring system from the device potential. This minimizes harmful equalizing currents caused by differences in potential between the medium and the device. The "Floating measurement" option is optionally available: order code for "Sensor option", option CV.

Operating conditions for the use of the "Floating measurement" option

Device version	Compact version and remote version (length of connecting cable ≤ 10 m)
Differences in voltage between medium potential and device potential	As small as possible, usually in the mV range
Alternating voltage frequencies in the medium or at ground potential (PE)	Below typical power line frequency in the country

To achieve the specified conductivity measuring accuracy, a conductivity calibration is recommended when the device is installed.

A full pipe adjustment is recommended when the device is installed.

Plastic pipe

Sensor and transmitter are correctly grounded. A difference in potential can occur between the medium and protective earth. Potential equalization between P_M and PE via the reference electrode is minimized with the "Floating measurement" option.

Starting conditions:
- The pipe has an insulating effect.
- Equalizing currents through the medium cannot be ruled out.

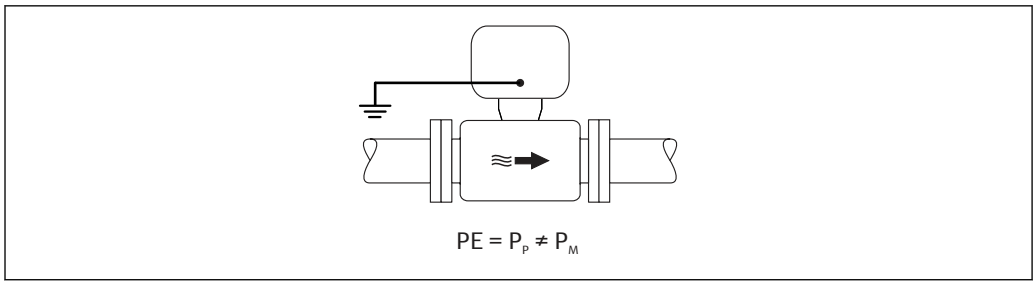

A0044855

1. Use the "Floating measurement" option, while also observing the operating conditions for floating measurement.
2. Connect the connection housing of the transmitter or sensor to ground potential via the ground terminal provided for this purpose.

Metal, ungrounded pipe with insulating liner

The sensor and transmitter are installed in a way that provides electrical insulation from PE. The medium and pipe have different potentials. The "Floating measurement" option minimizes harmful equalizing currents between P_M and P_P via the reference electrode.

Starting conditions:
- Metal pipe with insulating liner
- Equalizing currents through the medium cannot be ruled out.

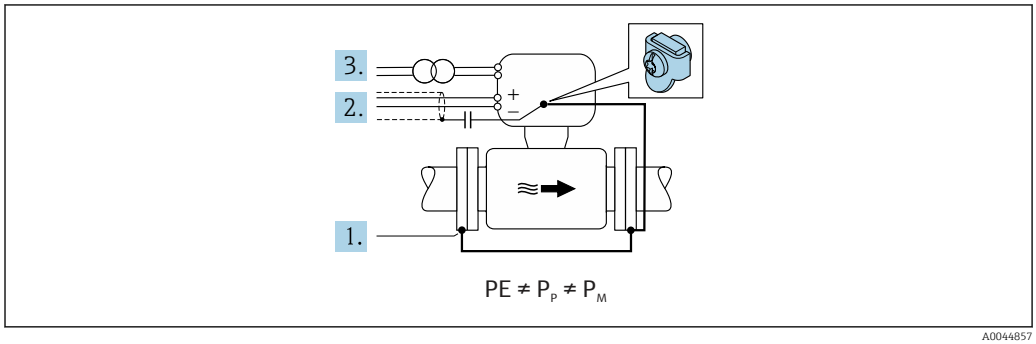

A0044857

1. Connect the pipe flanges and transmitter via the ground cable.
2. Route the shielding of the signal cables via a capacitor (recommended value 1.5µF/50V).
3. Device connected to power supply such that it is floating in relation to the protective earth (isolation transformer). This measure is not required in the case of 24V DC supply voltage without PE (= SELV power unit).
4. Use the "Floating measurement" option, while also observing the operating conditions for floating measurement.

Terminals

Spring-loaded terminals: Suitable for strands and strands with ferrules.
Conductor cross-section 0.2 to 2.5 mm² (24 to 12 AWG).

Cable entries

- Cable gland: M20 × 1.5 with cable Ø 6 to 12 mm (0.24 to 0.47 in)
- Thread for cable entry:
  - NPT ½"
  - G ½"
  - M20
- Device plug for digital communication: M12
  Only available for certain device versions → 38.

Pin assignment, device plug

FOUNDATION Fieldbus

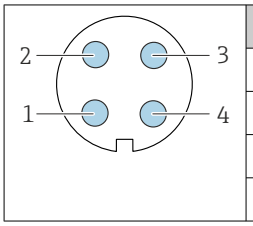

Pin	Assignment		Coding	Plug/socket
1	+	Signal +	A	Plug
2	-	Signal –		
3		Grounding		
4		Not used		

PROFIBUS PA

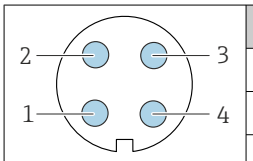

Pin	Assignment		Coding	Plug/socket
1	+	PROFIBUS PA +	A	Plug
2		Grounding		
3	-	PROFIBUS PA –		
4		Not used		

Recommended plug:
- Binder, series 713, part no. 99 1430 814 04
- Phoenix, part no. 1413934 SACC-FS-4QO SH PBPA SCO

PROFINET

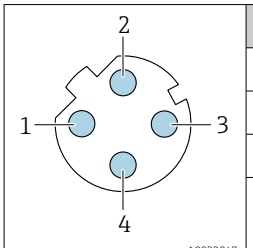

Pin	Assignment		Coding	Plug/socket
1	+	TD +	D	Socket
2	+	RD +		
3	-	TD –		
4	-	RD –		

Recommended plug:
- Binder, series 825, part no. 99 3729 810 04
- Phoenix, part no. 1543223 SACC-M12MSD-4Q

PROFINET over Ethernet-APL

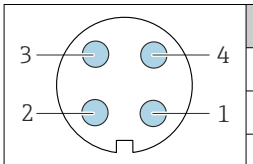

Pin	Assignment	Coding	Plug/socket
1	APL signal -	A	Socket
2	APL signal +		
3	Cable shield[1]		
4	Not used		
Metal plug housing	Cable shield		

[1] If a cable shield is used

Recommended plug:
- Binder, series 713, part no. 99 1430 814 04
- Phoenix, part no. 1413934 SACC-FS-4QO SH PBPA SCO

Modbus TCP over Ethernet-APL 10 Mbit/s

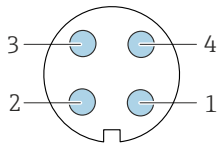

Pin	Assignment	Coding	Plug/socket
1	APL signal -	A	Socket
2	APL signal +		
3	Cable shield[1]		
4	Not used		
Metal plug housing	Cable shield		
[1]If a cable shield is used			

Recommended plug:
- Binder, series 713, part no. 99 1430 814 04
- Phoenix, part no. 1413934 SACC-FS-4QO SH PBPA SCO

Modbus TCP over Ethernet 100 Mbit/s

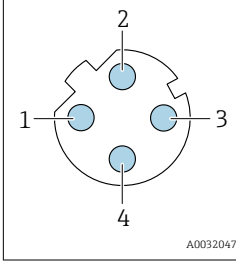

Pin	Assignment		Coding	Plug/socket
1	+	Tx	D	Socket
2	+	Rx		
3	-	Tx		
4	-	Rx		

Ethernet/IP

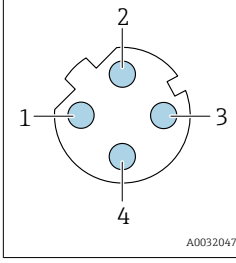

Pin	Assignment		Coding	Plug/socket
1	+	Tx	D	Socket
2	+	Rx		
3	-	Tx		
4	-	Rx		

Recommended plug:
- Binder, series 825, part no. 99 3729 810 04
- Phoenix, part no. 1543223 SACC-M12MSD-4Q

Service interface for

Order code for "Accessories mounted", option **NB**: Adapter RJ45 M12 (service interface)

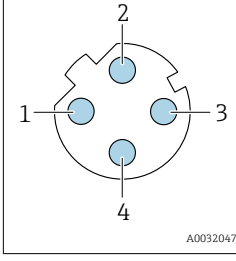

Pin	Assignment		Coding	Plug/socket
1	+	Tx	D	Socket
2	+	Rx		
3	-	Tx		
4	-	Rx		

Recommended plug:
- Binder, series 825, part no. 99 3729 810 04
- Phoenix, part no. 1543223 SACC-M12MSD-4Q

Cable specification

Permitted temperature range

- The installation guidelines that apply in the country of installation must be observed.
- The cables must be suitable for the minimum and maximum temperatures to be expected.

Power supply cable (incl. conductor for the inner ground terminal)

Standard installation cable is sufficient.

Protective grounding cable for the outer ground terminal

Conductor cross-section < 6 mm^2 (10 AWG)

The use of a cable lug enables the connection of larger cross-sections.

The grounding impedance must be less than 2 Ω.

Signal cable

For custody transfer, all signal lines must be shielded cables (tinned copper braiding, optical coverage ≥ 85 %). The cable shield must be connected on both sides.

4 to 20 mA current input

Standard installation cable is sufficient.

Pulse/frequency/switch output

Standard installation cable is sufficient.

Relay output

Standard installation cable is sufficient.

Status input

Standard installation cable is sufficient.

Current output 4 to 20 mA HART

Shielded twisted-pair cable.

See https://www.fieldcommgroup.org "HART PROTOCOL SPECIFICATIONS".

Modbus RS485

Shielded twisted-pair cable.

See https://modbus.org "MODBUS over Serial Line Specification and Implementation Guide".

PROFIBUS PA

Shielded twisted-pair cable. Cable type A is recommended.

See https://www.profibus.com "PROFIBUS Installation Guidelines".

PROFIBUS DP

Shielded twisted-pair cable. Cable type A is recommended.

See https://www.profibus.com "PROFIBUS Installation Guidelines".

PROFINET

Only PROFINET cables.

See https://www.profibus.com "PROFINET Planning guideline".

EtherNet/IP

Twisted-pair Ethernet CAT 5 or better.

See https://www.odva.org"EtherNet/IP Media Planning & Installation Manual".

Ethernet-APL

Shielded twisted-pair cable. Cable type A is recommended.

See https://www.profibus.com Ethernet-APL White Paper "

FOUNDATION Fieldbus

Twisted, shielded two-wire cable.

For further information on planning and installing FOUNDATION Fieldbus networks see:

- Operating Instructions for "FOUNDATION Fieldbus Overview" (BA00013S)
- FOUNDATION Fieldbus Guideline
- IEC 61158-2 (MBP)

Connecting cable for transmitter - remote display and operating module DKX001

Standard cable

A standard cable can be used as the connecting cable.

Standard cable	4 cores (2 pairs); pair-stranded with common shield
Shielding	Tin-plated copper-braid, optical cover ≥ 85 %
Capacitance: core/shield	Maximum 1 000 nF for Zone 1; Class I, Division 1
L/R	Maximum 24 µH/Ω for Zone 1; Class I, Division 1
Cable length	Maximum 300 m (1 000 ft), see the following table

Cross-section	**Cable length for use in:** ▪ **Non-hazardous area** ▪ **Hazardous area: Zone 2; Class I, Division 2** ▪ **Hazardous area: Zone 1; Class I, Division 1**
0.34 mm² (22 AWG)	80 m (270 ft)
0.50 mm² (20 AWG)	120 m (400 ft)
0.75 mm² (18 AWG)	180 m (600 ft)
1.00 mm² (17 AWG)	240 m (800 ft)
1.50 mm² (15 AWG)	300 m (1 000 ft)

Optionally available connecting cable

Standard cable	2 × 2 × 0.34 mm² (22 AWG) PVC cable [1] with common shield (2 pairs, pair-stranded)
Flame resistance	According to DIN EN 60332-1-2
Oil-resistance	According to DIN EN 60811-2-1
Shielding	Tin-plated copper-braid, optical cover ≥ 85 %
Capacitance: core/shield	≤200 pF/m
L/R	≤24 µH/Ω

Available cable length	10 m (35 ft)
Operating temperature	When mounted in a fixed position: −50 to +105 °C (−58 to +221 °F); when cable can move freely: −25 to +105 °C (−13 to +221 °F)

1) UV radiation can impair the cable outer sheath. Protect the cable from direct sunshine where possible.

Overvoltage protection

Mains voltage fluctuations	→ 40
Overvoltage category	Overvoltage category II
Short-term, temporary overvoltage	Between cable and ground up to 1200 V, for max. 5 s
Long-term, temporary overvoltage	Between cable and ground up to 500 V

Performance characteristics

Reference operating conditions

- Error limits following DIN EN 29104, in future ISO 20456
- Water, typically: +15 to +45 °C (+59 to +113 °F); 0.5 to 7 bar (73 to 101 psi)
- Data as indicated in the calibration protocol
- Accuracy based on accredited calibration rigs according to ISO 17025

Maximum measurement error

o.r. = of reading

Maximum permissible error under reference operating conditions

Volume flow

- ±0.5 % o.r. ± 1 mm/s (0.04 in/s)
- Optional: ±0.2 % o.r. ± 2 mm/s (0.08 in/s)

Fluctuations in the supply voltage have no effect within the specified range.

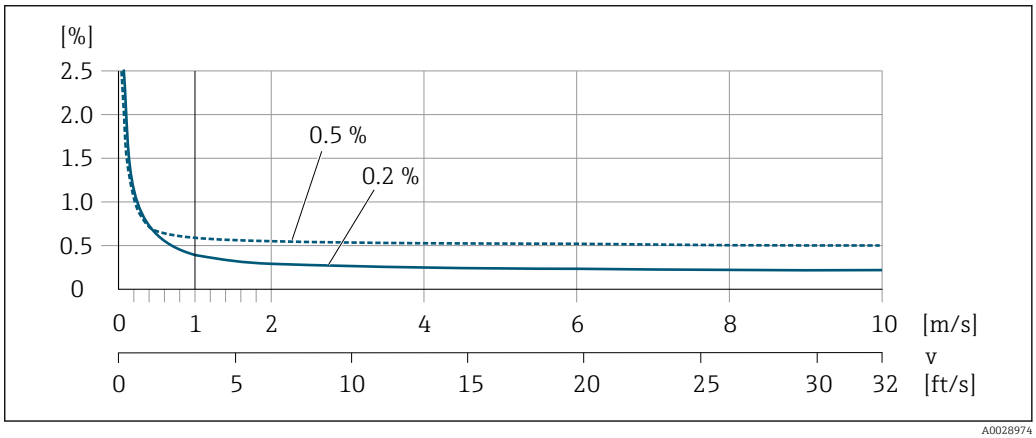

13 *Maximum measurement error in % o.r.*

Flat Spec

In the case of Flat Spec, the measurement error is constant in the range from $v_{0.5}$ ($v_{0.2}$) to v_{max}.

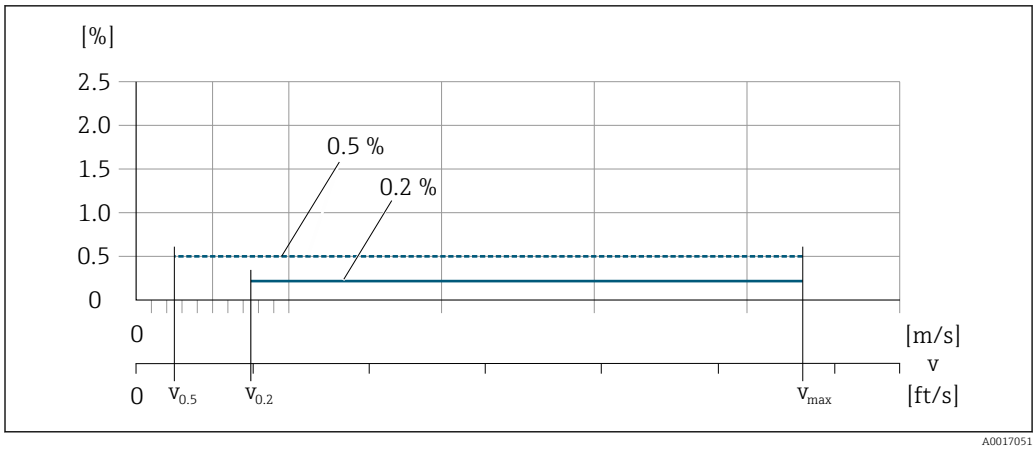

14 *Flat Spec in % o.r.*

Flat Spec flow values 0.5 %

Nominal diameter		$v_{0.5}$		v_{max}	
[mm]	[in]	[m/s]	[ft/s]	[m/s]	[ft/s]
25 to 600	1 to 24	0.5	1.64	10	32
50 to 300 [1]	2 to 12	0.25	0.82	5	16

1) Order code for "Design", option C

Flat Spec flow values 0.2 %

Nominal diameter		$v_{0.2}$		v_{max}	
[mm]	[in]	[m/s]	[ft/s]	[m/s]	[ft/s]
25 to 600	1 to 24	1.5	4.92	10	32
50 to 300 [1]	2 to 12	0.6	1.97	4	13

1) Order code for "Design", option C

Electrical conductivity

The values apply for:
- Devices installed in a metal pipe or in a non-metal pipe with ground disks
- Devices whose potential equalization was performed according to the instructions in the associated Operating Instructions
- Measurements at a reference temperature of 25 °C (77 °F). At different temperatures, attention must be paid to the temperature coefficient of the medium (typically 2.1 %/K)

Conductivity [µS/cm]	Measurement error [%] of reading
5 to 20	± 20%
> 20 to 50	± 10%
> 50 to 10 000	▪ Standard: ± 10% ▪ Optional [1]: ± 5%
> 10 000 to 20 000	± 10%
> 20 000 to 100 000	± 20%

1) Order code for "Calibrated conductivity measurement", option CW

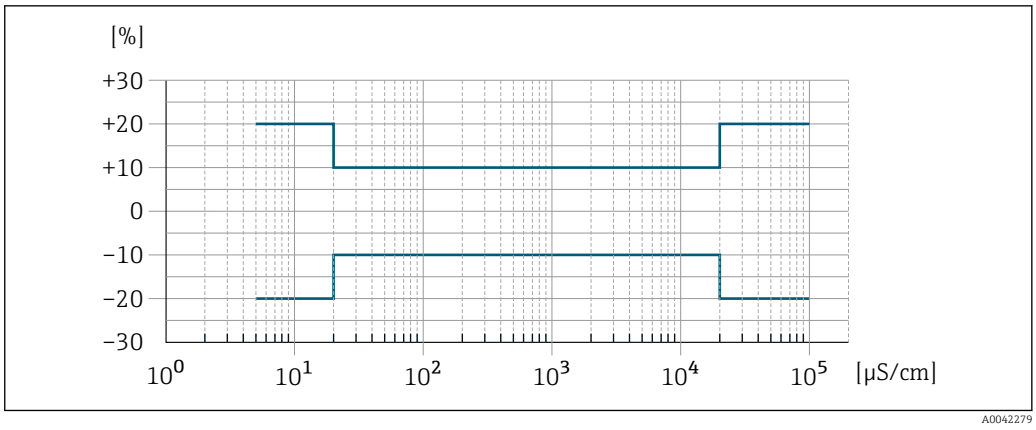

15 *Measurement error (standard)*

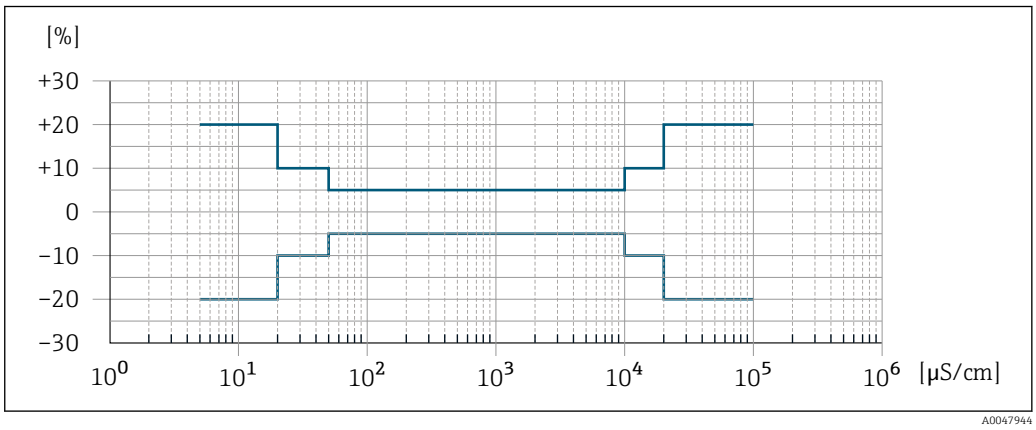

16 *Measurement error (optional: order code for "Calibrated conductivity measurement", option CW)*

Accuracy of outputs

The outputs have the following base accuracy specifications.

Current output

Accuracy	±5 µA

Pulse/frequency output

o.r. = of reading

Accuracy	Max. ±50 ppm o.r. (over the entire ambient temperature range)

Repeatability

o.r. = of reading

Volume flow
Max. ±0.1 % o.r. ± 0.5 mm/s (0.02 in/s)

Electrical conductivity
Max. ±5 % o.r.

Influence of ambient temperature

Current output

Temperature coefficient	Max. 1 µA/°C

Pulse/frequency output

Temperature coefficient	No additional effect. Included in accuracy.

Installation

Mounting location

- Do not install the device at the highest point of the pipe.
- Do not install the device upstream from a free pipe outlet in a down pipe.

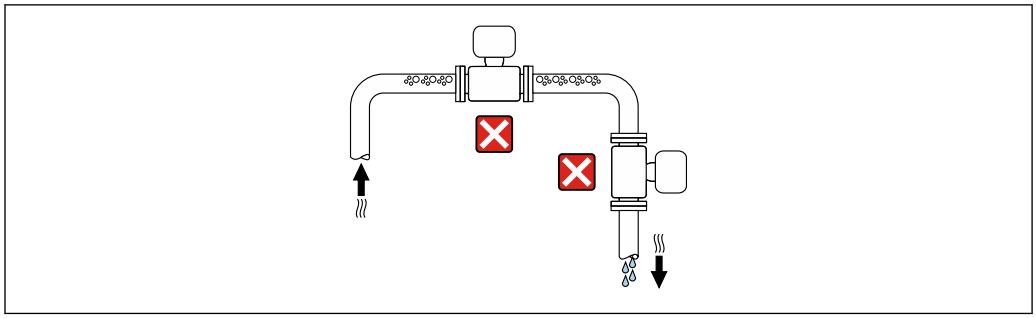

A0042131

The device should ideally be installed in an ascending pipe.

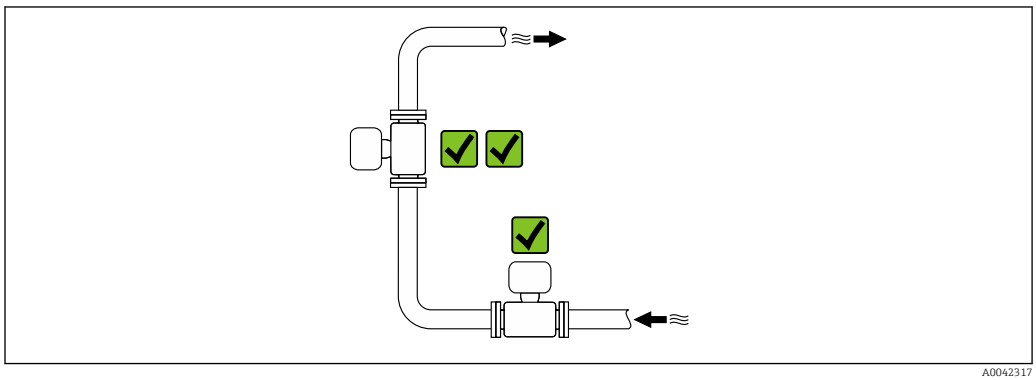

A0042317

Installation near valves

Mount the sensor upstream from the valve if possible.

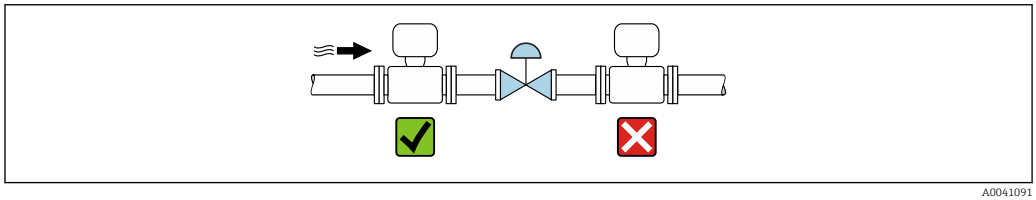

A0041091

Installation upstream from a down pipe

NOTICE

A vacuum in the measuring tube can damage the liner!

▶ If installing upstream of down pipes whose length h ≥ 5 m (16.4 ft): install a siphon with a vent valve downstream of the device.

This arrangement prevents the flow of liquid stopping in the pipe and the formation of air pockets.

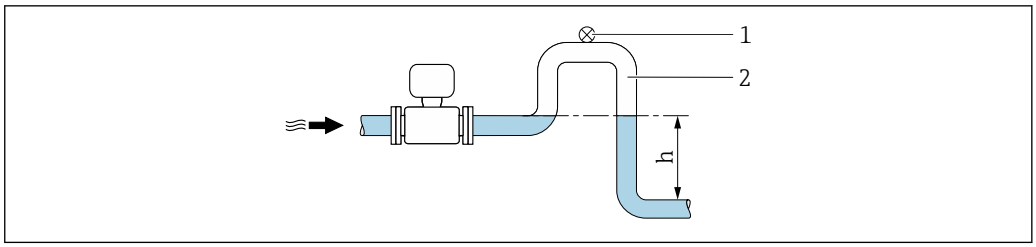

A0028981

1 Vent valve
2 Pipe siphon
h Length of down pipe

Installation with partially filled pipes

- Partially filled pipes with a gradient require a drain-type configuration.
- The installation of a cleaning valve is recommended.

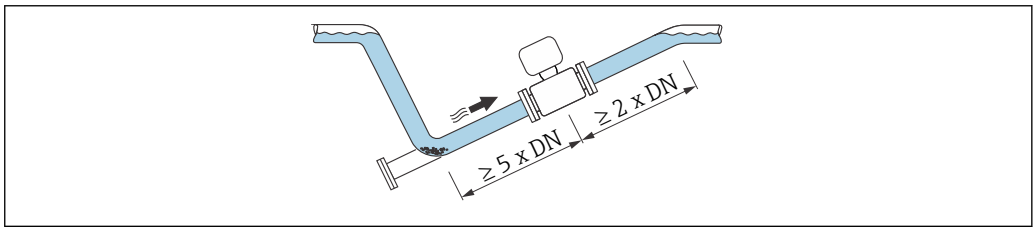

A0041088

No inlet and outlet runs for devices with the order code for "Design": option C, H or I.

Installation near pumps

NOTICE

A vacuum in the measuring tube can damage the liner!

- ▶ In order to maintain the static pressure, install the device in the flow direction downstream from the pump.
- ▶ Install pulsation dampers if reciprocating, diaphragm or peristaltic pumps are used.

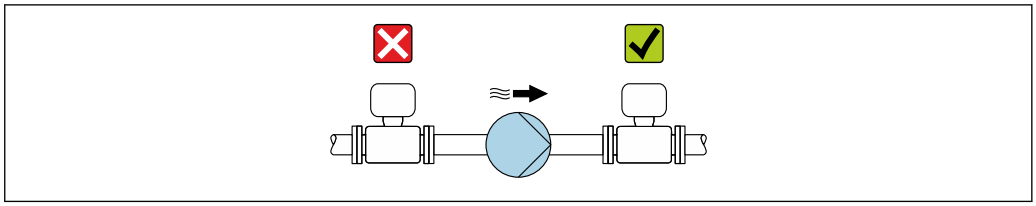

A0041083

- Information on the liner's resistance to partial vacuum → 🖹 69
- Information on the measuring system's resistance to vibration and shock → 🖹 65

Installation of heavy devices

Support required for nominal diameters of DN ≥ 350 mm (14 in).

NOTICE

Damage to the device!

If incorrect support is provided, the sensor housing could buckle and the internal magnetic coils could be damaged.

- ▶ Only provide supports at the pipe flanges.

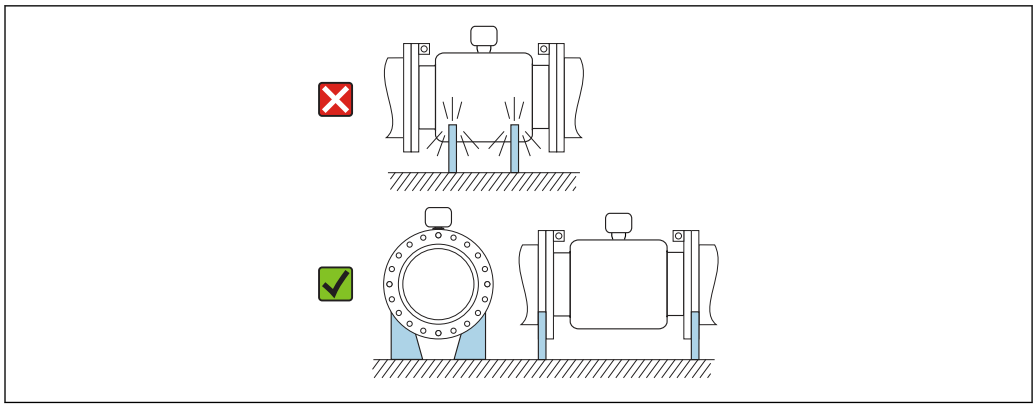

A0041087

Installation in event of pipe vibrations

NOTICE

Pipe vibrations can damage the device!

- ▶ Do not expose the device to strong vibrations.
- ▶ Support the pipe and fix it in place.
- ▶ Support the device and fix it in place.

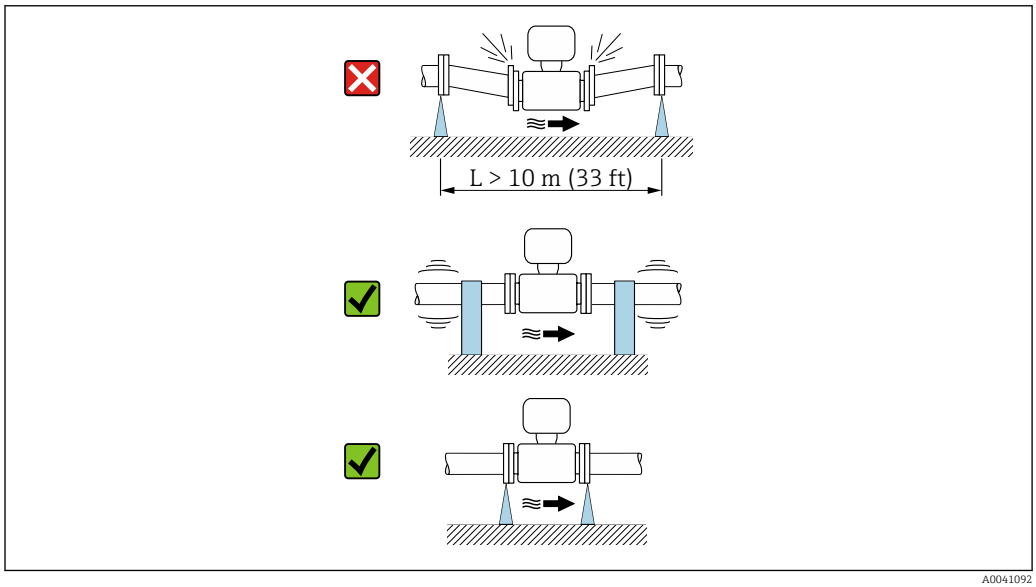

A0041092

Information on the measuring system's resistance to vibration and shock → 65

Orientation

The direction of the arrow on the nameplate helps you to install the measuring instrument according to the flow direction (direction of medium flow through the piping).

Orientation		Recommendation
Vertical orientation	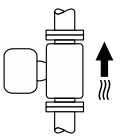 A0015591	✓✓
Horizontal orientation, transmitter at top	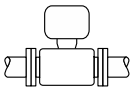 A0015589	✓✓ [1]

Orientation		Recommendation
Horizontal orientation, transmitter at bottom	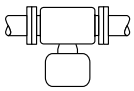 A0015590	✓✓ 2) 3) ✗ 4)
Horizontal orientation, transmitter at side	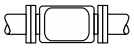 A0015592	✗

1) Applications with low process temperatures may reduce the ambient temperature. To maintain the minimum ambient temperature for the transmitter, this orientation is recommended.
2) Applications with high process temperatures may increase the ambient temperature. To maintain the maximum ambient temperature for the transmitter, this orientation is recommended.
3) To prevent the electronics from overheating in the event of strong heat formation (e.g. CIP or SIP cleaning process), install the device with the transmitter part pointing downwards.
4) With the empty pipe detection function switched on: empty pipe detection only works if the transmitter housing is pointing upwards.

Vertical

Optimum for self-emptying pipe systems and for use in conjunction with empty pipe detection.

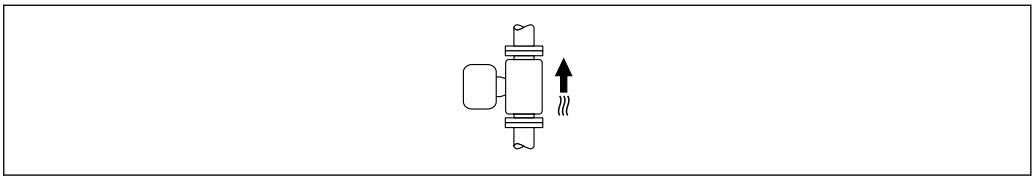

A0015591

Horizontal

- Ideally, the measuring electrode plane should be horizontal. This prevents brief insulation of the measuring electrodes by entrained air bubbles.
- Empty pipe detection only works if the transmitter housing is pointing upwards as otherwise there is no guarantee that the empty pipe detection function will actually respond to a partially filled or empty measuring tube.

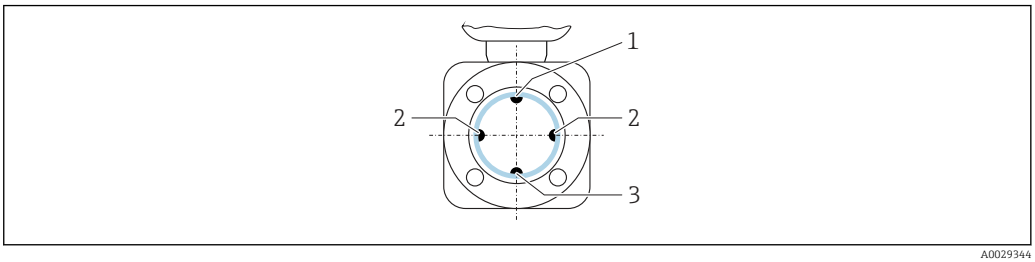

A0029344

1 EPD electrode for empty pipe detection
2 Measuring electrodes for signal detection
3 Reference electrode for potential equalization

Inlet and outlet runs

Installation with inlet and outlet runs

Installation requires inlet and outlet runs: devices with the order code for "Design", option D, E, F and G.

Installation with elbows, pumps or valves

To avoid a vacuum and to maintain the specified level of measurement accuracy, if possible install the device upstream from assemblies that produce turbulence (e.g. valves, T-sections) and downstream from pumps.

Maintain straight, unimpeded inlet and outlet runs.

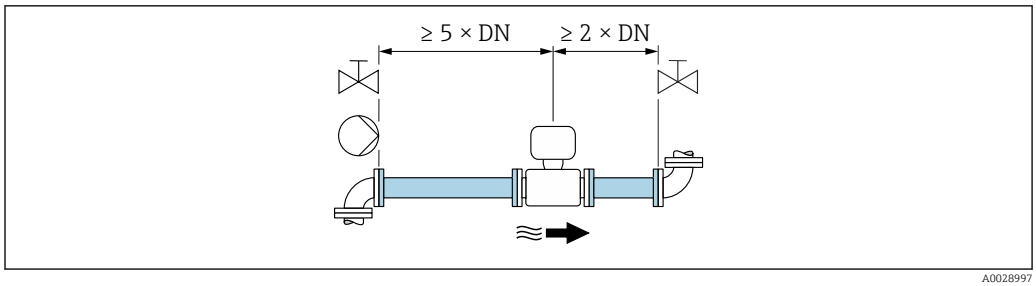

A0028997

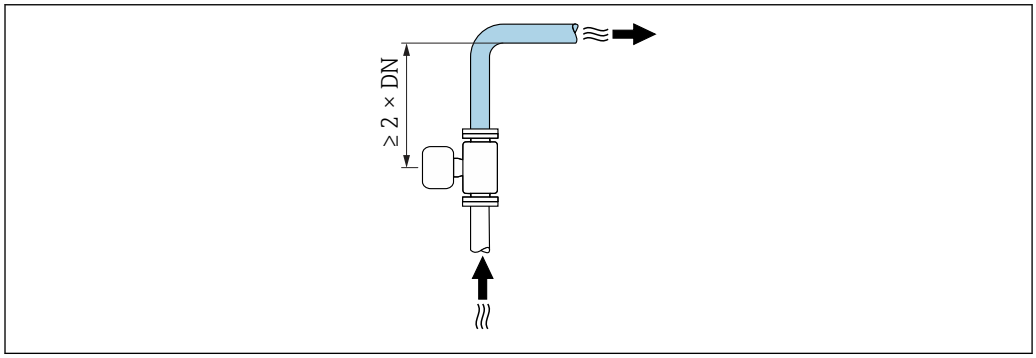

A0042132

Installation without inlet and outlet runs

Depending on the device design and installation location, the inlet and outlet runs can be reduced or omitted entirely.

Maximum measurement error
When the device is installed with the inlet and outlet runs described, a maximum measurement error of ±0.5 % of the reading ±1 mm/s (0.04 in/s) can be guaranteed.

Devices and possible order options

Order code for "Design"		
Option	**Description**	**Design**
C	Fixed flange, constricted measuring tube, 0 x DN inlet/outlet runs	Constricted measuring tube [1]
H	Lap joint flange, 0 x DN inlet/outlet runs	Full Bore [2]
I	Fixed flange, 0 x DN inlet/outlet runs	
J	Fixed flange, short installed length, 0 x DN inlet/ outlet runs	
K	Fixed flange, long installed length, 0 x DN inlet/ outlet runs	

1) "Constricted measuring tube" stands for a reduction of the internal diameter of the measuring tube. The reduced internal diameter causes a higher flow velocity inside the measuring tube.
2) "Full Bore" stands for the full diameter of the measuring tube. There is no pressure loss with a full diameter.

Installation before or after bends

Installation without inlet and outlet runs is possible: devices with the order code for "Design", option C, H, I, J and K.

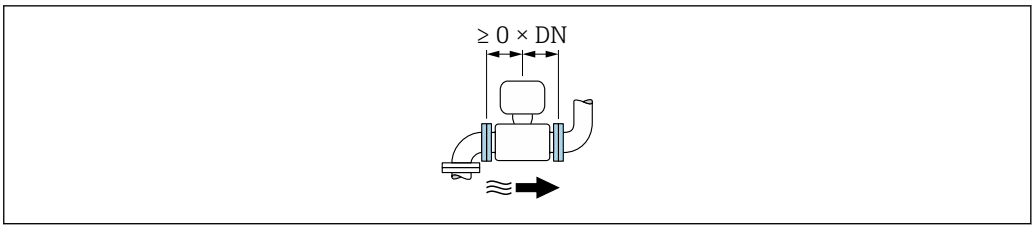

Installation downstream of pumps

Installation without inlet and outlet runs is possible: devices with the order code for "Design", option C, H and I.

In the case of devices with the order code for "Design", option J and K, an inlet run of only ≥ 2 x DN must be taken into consideration.

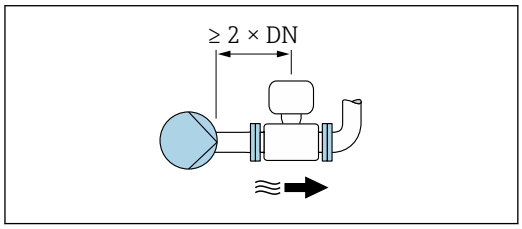

Installation upstream of valves

Installation without inlet and outlet runs is possible: devices with the order code for "Design", option C, H and I.

In the case of devices with the order code for "Design", option J and K, an outlet run of only ≥ 1 x DN must be taken into consideration.

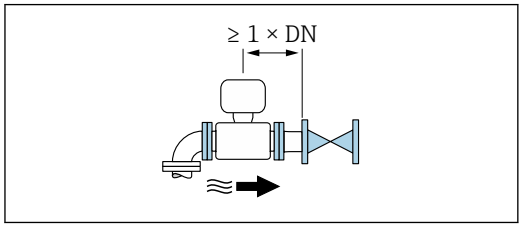

Installation downstream of valves

Installation without inlet and outlet runs is possible if the valve is 100% open during operation: devices with the order code for "Design", option C, H and I.

In the case of devices with the order code for "Design", option J and K, an inlet run of only ≥ 2 x DN must be taken into consideration if the valve is 100% open during operation.

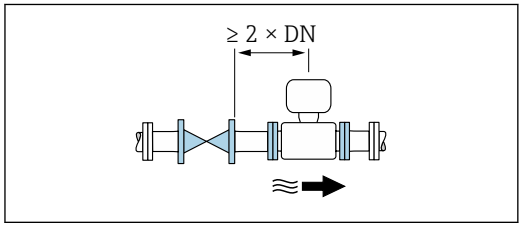

Adapters

The sensor can also be installed in larger-diameter pipes with the aid of suitable adapters according to DIN EN 545 (double-flange reducers). The resultant increase in the rate of flow improves measurement accuracy with very slow-moving fluids.

The nomogram shown here can be used to calculate the pressure loss caused by reducers and expanders:

- Calculate the ratio of the diameters d/D.
- From the nomogram read off the pressure loss as a function of flow velocity (downstream from the reduction) and the d/D ratio.

The nomogram only applies to liquids with a viscosity similar to that of water.

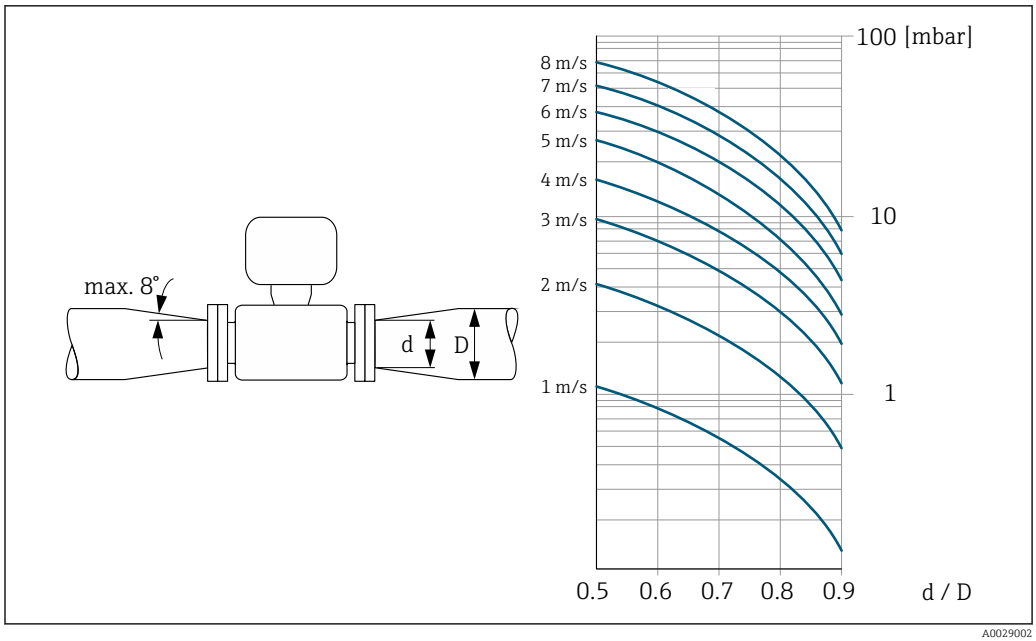

Special installation instructions

Protective cover

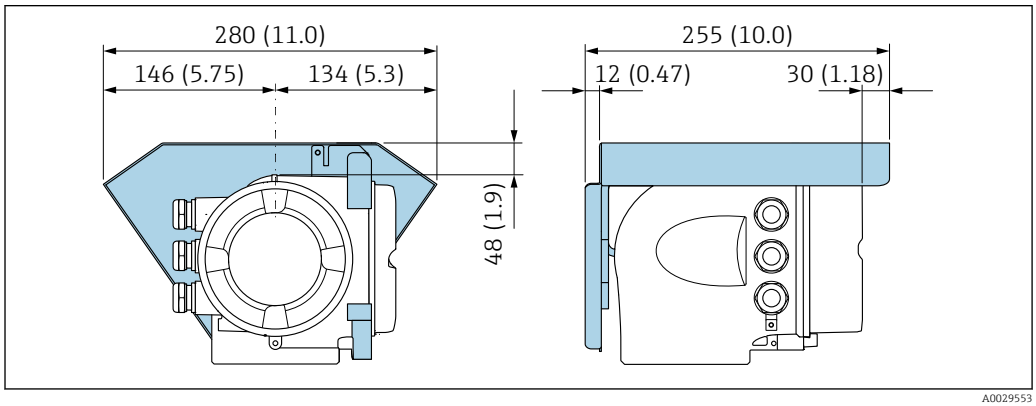

17 *Unit mm (in)*

Environment

Ambient temperature range

Transmitter	Standard: −40 to +60 °C (−40 to +140 °F)
Local display	−20 to +60 °C (−4 to +140 °F), the readability of the display may be impaired at temperatures outside the temperature range.
Sensor	▪ Process connection material, carbon steel: −10 to +60 °C (+14 to +140 °F) ▪ Process connection material, stainless steel: −40 to +60 °C (−40 to +140 °F)
Liner	Do not exceed or fall below the permitted temperature range of the liner .

If operating outdoors:
- Install the measuring device in a shady location.
- Avoid direct sunlight, particularly in warm climatic regions.
- Avoid direct exposure to weather conditions.

You can order a weather protection cover from Endress+Hauser. → 124.

Storage temperature

The storage temperature corresponds to the operating temperature range of the transmitter and the sensor → 📄 64.

- Protect the measuring device against direct sunlight during storage in order to avoid unacceptably high surface temperatures.
- Select a storage location where moisture cannot collect in the measuring device as fungus or bacteria infestation can damage the liner.
- If protection caps or protective covers are mounted these should never be removed before installing the measuring device.

Relative humidity

The device is suitable for use in outdoor and indoor areas with a relative humidity of 4 to 95%.

Operating height

According to EN 61010-1
- ≤ 2 000 m (6 562 ft)
- > 2 000 m (6 562 ft) with additional overvoltage protection (e.g. Endress+Hauser HAW Series)

Degree of protection

Transmitter

- IP66/67, Type 4X enclosure, suitable for pollution degree 4
- When the housing is open: IP20, Type 1 enclosure, suitable for pollution degree 2
- Display module: IP20, Type 1 enclosure, suitable for pollution degree 2

Optional

Order code for "Sensor option", option C3
- IP66/67, type 4X enclosure
- Fully welded, with protective coating as per EN ISO 12944 C5-M
- For the operation of the device in corrosive environments

External WLAN antenna

IP67

Vibration-resistance and shock resistance

Vibration sinusoidal, in accordance with IEC 60068-2-6

- 2 to 8.4 Hz, 3.5 mm peak
- 8.4 to 2 000 Hz, 1 g peak

Vibration broad-band random, according to IEC 60068-2-64

- 10 to 200 Hz, 0.003 g^2/Hz
- 200 to 2 000 Hz, 0.001 g^2/Hz
- Total: 1.54 g rms

Shock half-sine, according to IEC 60068-2-27

6 ms 30 g

Rough handling shocks according to IEC 60068-2-31

Mechanical load

Transmitter housing:
- Protect against mechanical effects, such as shock or impact
- Do not use as a ladder or climbing aid

Electromagnetic compatibility (EMC)

- As per IEC/EN 61326 and NAMUR Recommendation 21 (NE 21), NAMUR Recommendation 21 (NE 21) is fulfilled when the device is installed in accordance with NAMUR Recommendation 98 (NE 98).
- As per IEC/EN 61000-6-2 and IEC/EN 61000-6-4
- Device version with PROFIBUS DP: Complies with emission limits for industry as per EN 50170 Volume 2, IEC 61784

The following applies for PROFIBUS DP: If baud rates > 1.5 MBaud, an EMC cable entry must be used and the cable shield must continue as far as the terminal wherever possible.

Details are provided in the Declaration of Conformity.

This unit is not intended for use in residential environments and cannot guarantee adequate protection of the radio reception in such environments.

The selection of a sensor with a steel housing is recommended for use in the vicinity of electrical power supply lines with strong currents.

Process

Medium temperature range

Liner	Nominal diameter		Medium temperature range
	[mm]	[in]	
Hard rubber	50 to 3000	2 to 120	0 to +80 °C (+32 to +176 °F)
Polyurethane	25 to 1200	1 to 48	–20 to +50 °C (–4 to +122 °F)
PTFE	25 to 300	1 to 12	–20 to +90 °C (–4 to +194 °F)

Conductivity

≥5 µS/cm for liquids in general.

Pressure-temperature ratings

The following pressure/temperature diagrams apply to all pressure-bearing parts of the device and not just the process connection. The diagrams show the maximum permissible medium pressure depending on the specific medium temperature.

Process connection: fixed flange similar to EN 1092-1 (DIN 2501)

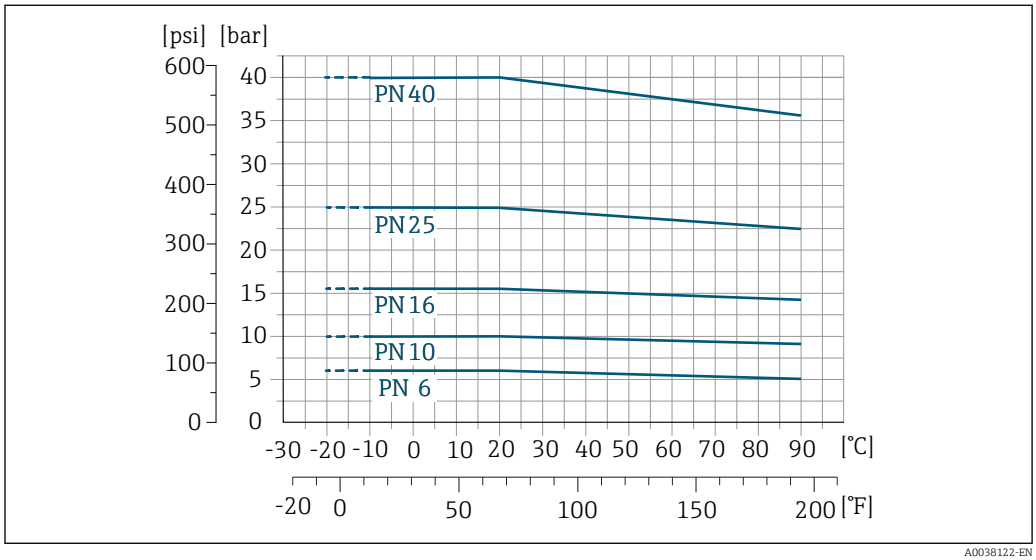

18 *Process connection material: stainless steel (–20 °C (–4 °F)); carbon steel (–10 °C (14 °F))*

Process connection: fixed flange similar to ASME B16.5

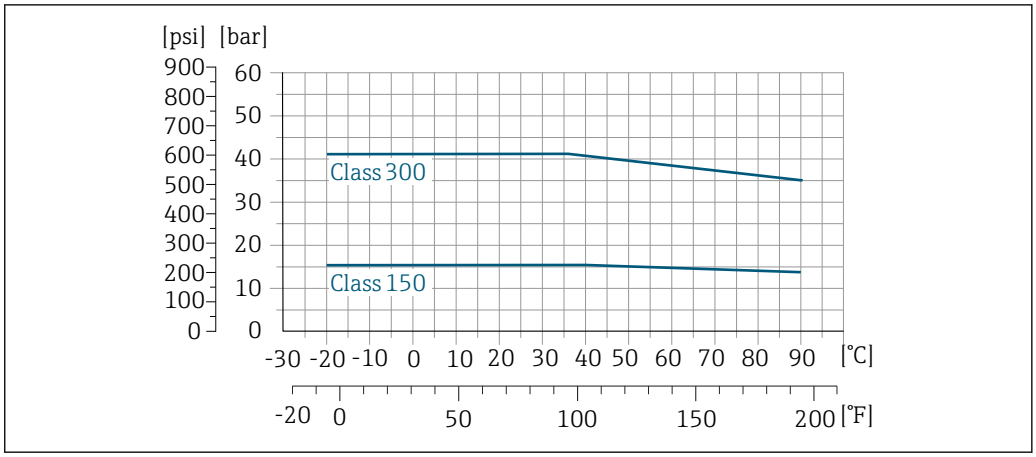

19 *Process connection material: stainless steel*

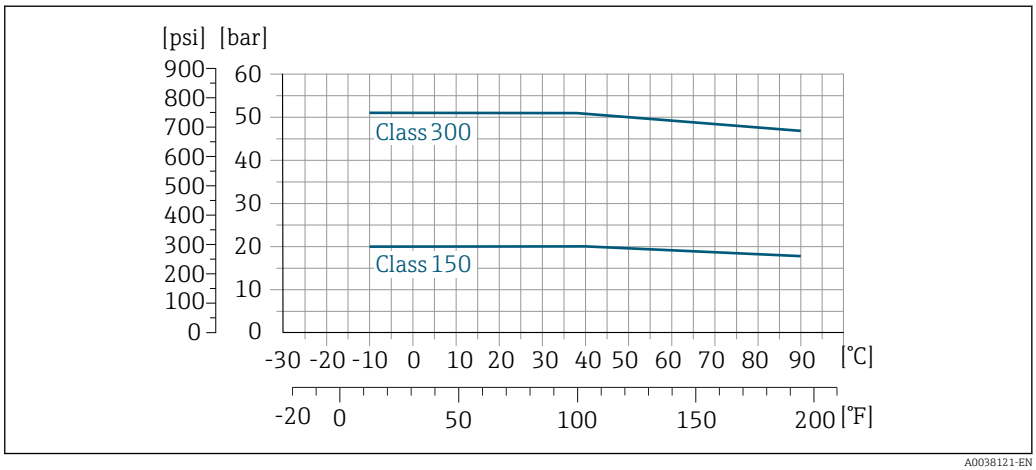

20 *Process connection material: carbon steel*

Process connection: fixed flange similar to JIS B2220

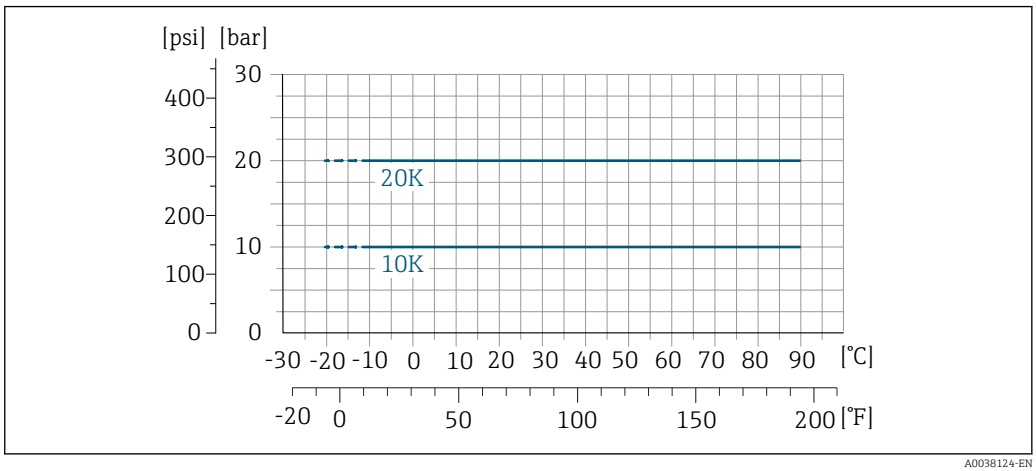

21 *Process connection material: stainless steel (−20 °C (−4 °F)); carbon steel (−10 °C (14 °F))*

Process connection: fixed flange similar to AWWA C207

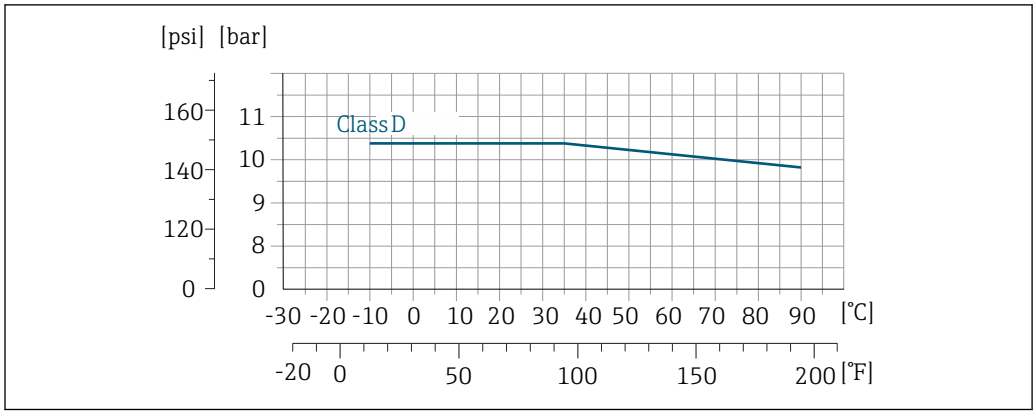

22 *Process connection material: carbon steel*

Process connection: fixed flange similar to AS 2129

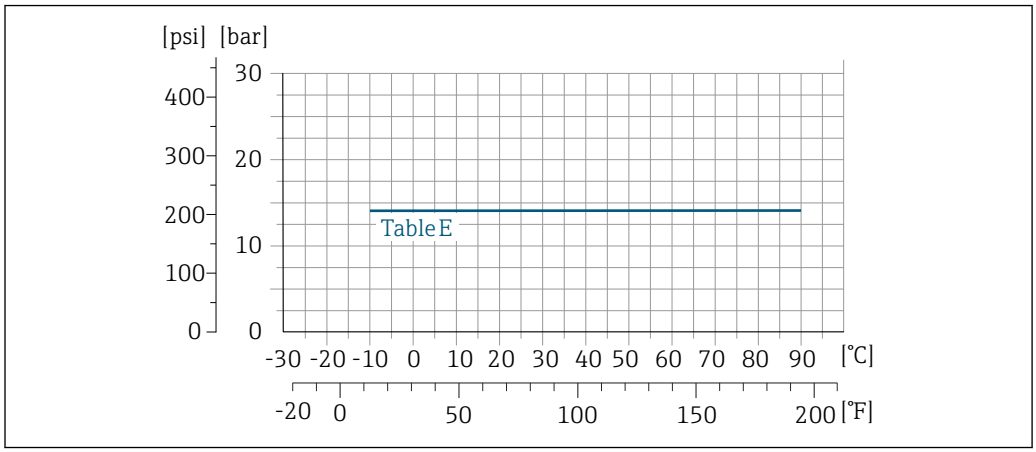

23 *Process connection material: carbon steel*

Process connection: fixed flange similar to AS 4087

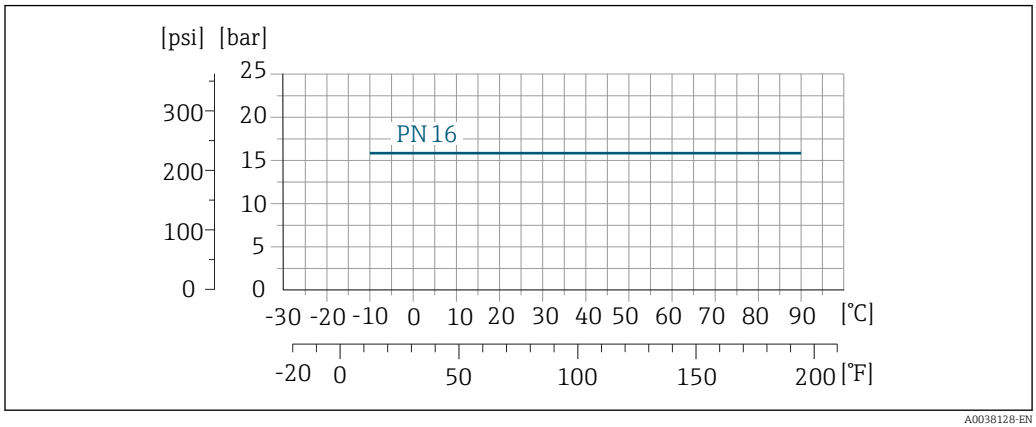

24 *Process connection material: carbon steel*

Process connection: lap joint flange/lap joint flange, stamped plate similar to EN 1092-1 (DIN 2501) and ASME B16.5; DN 25 to 300 (1 to 12")

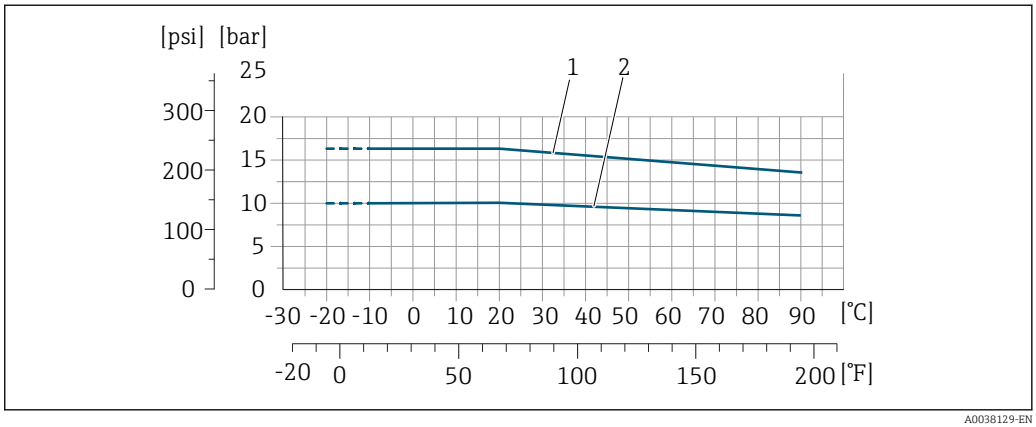

25 *Process connection material: stainless steel (−20 °C (−4 °F)); carbon steel (−10 °C (14 °F))*

1 *Lap joint flange PN16/ Class150*
2 *Lap joint flange, stamped plate PN10, lap joint flange PN10*

Pressure tightness

Liner: hard rubber

Nominal diameter		Limit values for absolute pressure in [mbar] ([psi]) for medium temperatures:		
[mm]	[in]	+25 °C (+77 °F)	+50 °C (+122 °F)	+80 °C (+176 °F)
50 … 3000	2 … 120	0 (0)	0 (0)	0 (0)

Liner: polyurethane

Nominal diameter		Limit values for absolute pressure in [mbar] ([psi]) for medium temperatures:	
[mm]	[in]	+25 °C (+77 °F)	+50 °C (+122 °F)
25 … 900	1 … 36	0 (0)	0 (0)

Liner: PTFE

Nominal diameter		Limit values for absolute pressure in [mbar] ([psi]) for medium temperatures:	
[mm]	[in]	+25 °C (+77 °F)	+90 °C (+194 °F)
25	1	0 (0)	0 (0)
40	2	0 (0)	0 (0)
50	2	0 (0)	0 (0)
65	2 ½	0 (0)	40 (0.58)
80	3	0 (0)	40 (0.58)
100	4	0 (0)	135 (2.0)
125	5	135 (2.0)	240 (3.5)
150	6	135 (2.0)	240 (3.5)
200	8	200 (2.9)	290 (4.2)
250	10	330 (4.8)	400 (5.8)
300	12	400 (5.8)	500 (7.3)

Flow limit

The diameter of the pipe and the flow rate determine the nominal diameter of the sensor. The optimum velocity of flow is between 2 to 3 m/s (6.56 to 9.84 ft/s). Also match the velocity of flow (v) to the physical properties of the medium:
- v < 2 m/s (6.56 ft/s): for abrasive media (e.g. potter's clay, lime milk, ore slurry)
- v > 2 m/s (6.56 ft/s): for media producing buildup (e.g. wastewater sludge)

A necessary increase in the flow velocity can be achieved by reducing the sensor nominal diameter.

Pressure loss

- No pressure loss occurs if the sensor is installed in a pipe with the same nominal diameter.
- Pressure losses for configurations incorporating adapters according to DIN EN 545 → 63

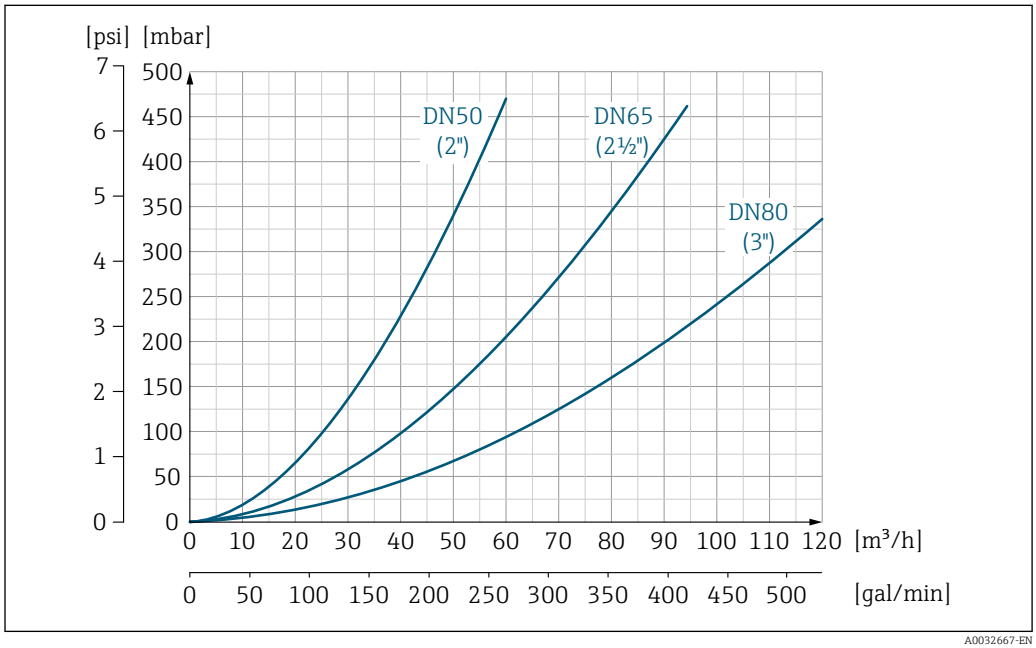

26 Pressure loss DN 50 to 80 (2 to 3") for order code for "Design", option C "Fixed flange, constricted measuring tube", 0 x DN inlet/outlet runs"

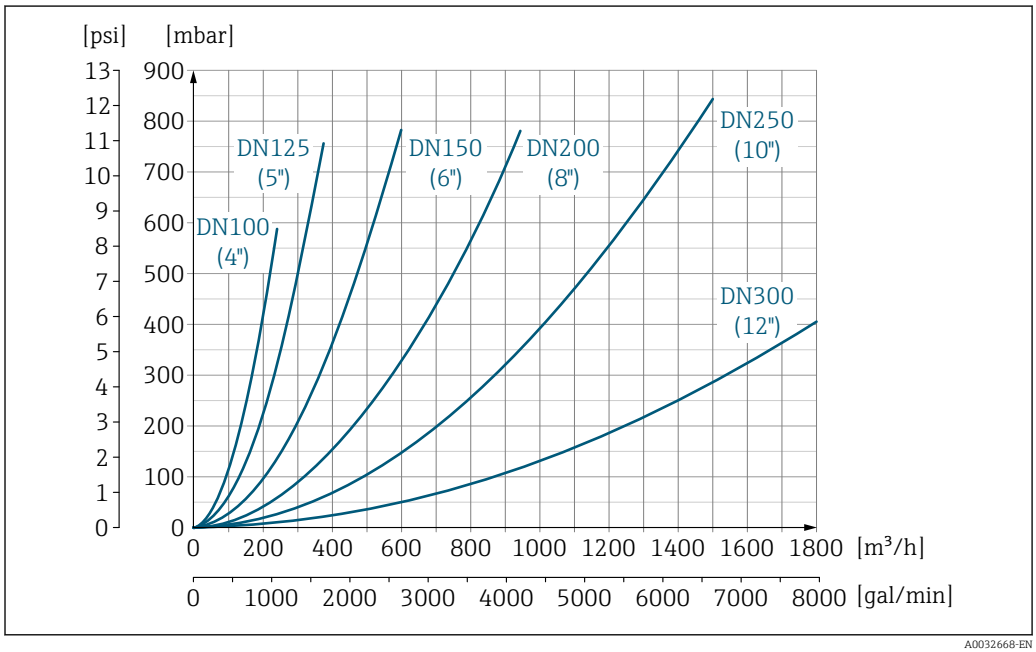

27 Pressure loss DN 100 to 300 (4 to 12") for order code for "Design", option C "Fixed flange, constricted measuring tube", 0 x DN inlet/outlet runs"

System pressure

Installation near pumps → 59

Thermal insulation

If process fluids are very hot, it is necessary to insulate pipes in order to reduce energy loss and to prevent individuals from accidentally coming into contact with hot pipes. Please observe the applicable standards and guidelines for insulating pipes.

NOTICE

Electronics overheating on account of thermal insulation!

- The housing support is used for heat dissipation and must be completely free (i.e. uncovered). At the very maximum, the sensor insulation may extend as far as the upper edge of the two sensor half-shells.

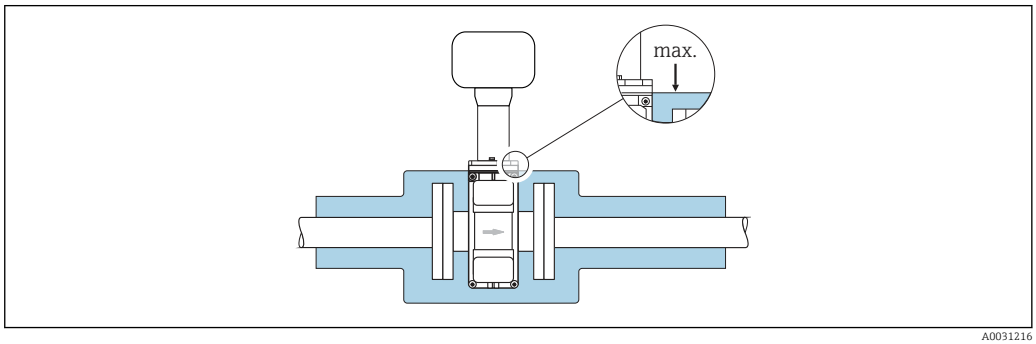

A0031216

Vibrations

Installation in event of pipe vibrations → 60

Magnetism and static electricity

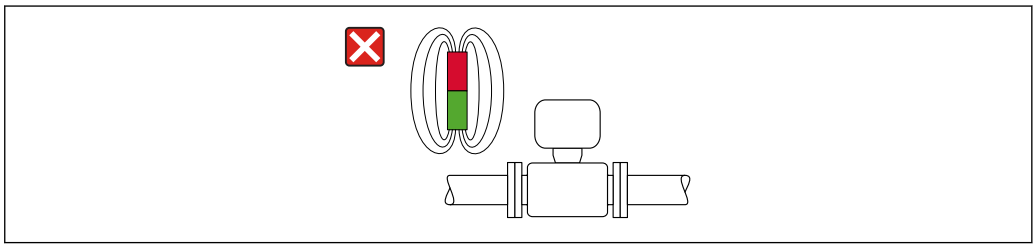

A0042152

28 *Avoid magnetic fields*

Custody transfer

The measuring device is optionally tested in accordance with OIML R49 and has an EU type-examination certificate according to Measuring Instruments Directive 2014/32/EU for service subject to legal metrological control ("custody transfer") for cold water (Annex III).

The permitted medium temperature in these applications is 0 to +50 °C (+32 to +122 °F).

The device is used with a legally controlled totalizer display on the local display.

Measuring devices subject to legal metrological control totalize in both directions, i.e. all the outputs consider flow components in the positive (forward) and negative (reverse) flow direction.

Generally a measuring device subject to legal metrological control is secured against tampering by seals on the transmitter or sensor. These seals may normally only be opened by a representative of the competent authority for legal metrology controls.

After putting the device into circulation or after sealing the device, operation is only possible to a limited extent.

Detailed ordering information is available from your local Endress+Hauser sales center for national approvals (outside Europe) as cold water meters based on OIML R49.

Mechanical construction

Dimensions in SI units

Compact version

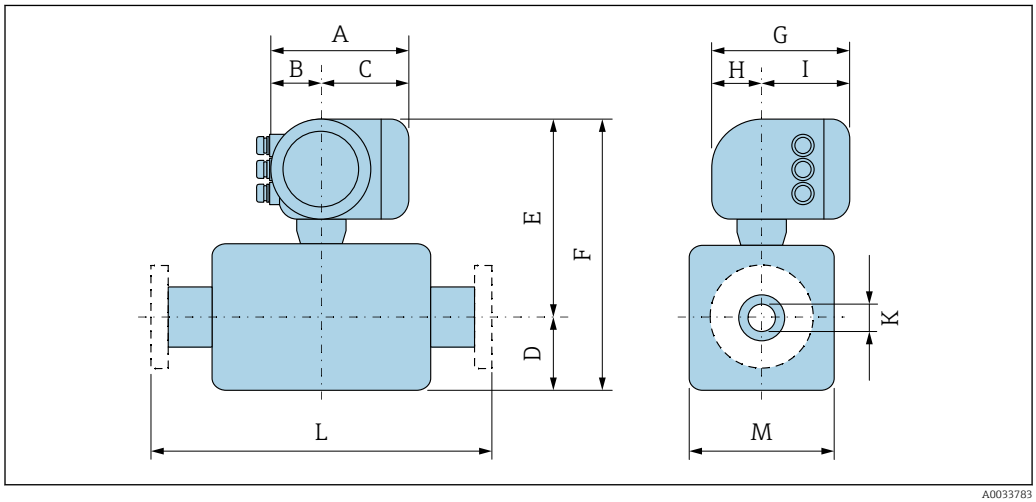

A0033783

Order code for "Housing", option A "Aluminum, coated"

A [1] [mm]	B [1] [mm]	C [mm]	G [2] [mm]	H [mm]	I [2] [mm]
169	68	101	200	59	141

1) Depending on the cable gland used: values up to + 30 mm
2) For version without local display: values − 30 mm

Order code for "Housing", option A "Aluminum, coated"; Ex d or XP

A [1] [mm]	B [mm]	C [mm]	G [2] [mm]	H [mm]	I [mm]
188	85	103	217	58	159

1) Depending on the cable gland used: values up to + 30 mm
2) For version without local display: values − 40 mm

DN 25 to 300 mm (1 to 12 in): Sensor with aluminum half-shell housing

DN		Order code for "Design"									
		Options D, E, H, I				Option C					
		D [1]	E [1) 2) 3)]	F [1) 2) 3)]	M [1]	D [1]	E [1) 2) 3)]	F [1) 2) 3)]	M [1]	K	L
[mm]	[in]	[mm]	[mm]	[mm]	[mm]	[mm]	[mm]	[mm]	[mm]	[mm]	[mm]
25	1	84	271	355	120	–	–	–	–	[4]	200
32	–	84	271	355	120	–	–	–	–	[4]	200
40	1 ½	84	271	355	120	–	–	–	–	[4]	200
50	2	84	271	355	120	84	271	355	120	[4]	200
65	–	109	296	405	180	84	271	355	120	[4]	200
80	3	109	296	405	180	84	271	355	120	[4]	200
100	4	109	296	405	180	109	296	405	180	[4]	250
125	–	150	336	486	260	109	296	405	180	[4]	250
150	6	150	336	486	260	109	296	405	180	[4]	300
200	8	180	361	541	324	150	336	486	260	[4]	350
250	10	205	386	591	400	150	336	486	260	[4]	450
300	12	230	411	641	460	180	361	541	324	[4]	500

1) The dimensions are reference values. They may vary depending on the pressure rating, design and order option.
2) With order code for "Sensor option", option CG "Sensor extended neck for insulation": values + 110 mm
3) For Ex d or XP versions: values + 30 mm
4) Depends on the liner → 🖹 102

DN 25 to 300 mm (1 to 12 in): Sensor with fully welded carbon steel housing

DN		Order code for "Design"									
		Option E				Option C					
		D [1]	E [1) 2)]	F [1) 2)]	M [1]	D [1]	E [1) 2)]	F [1) 2)]	M [1]	K	L
[mm]	[in]	[mm]	[mm]	[mm]	[mm]	[mm]	[mm]	[mm]	[mm]	[mm]	[mm]
25	1	70	290	360	140	–	–	–	–	[3]	200
32	–	70	290	360	140	–	–	–	–	[3]	200
40	1 ½	70	290	360	140	–	–	–	–	[3]	200
50	2	70	290	360	140	70	290	360	140	[3]	200
65	–	82	302	384	165	70	290	360	140	[3]	200
80	3	87	307	394	175	70	290	360	140	[3]	200
100	4	100	320	420	200	82	302	384	165	[3]	250
125	–	113	333	446	226	87	307	394	175	[3]	250
150	6	134	354	488	269	100	320	420	200	[3]	300
200	8	160	380	540	320	113	333	446	226	[3]	350
250	10	193	413	606	387	134	354	488	269	[3]	450
300	12	218	438	656	437	160	380	540	320	[3]	500

1) The dimensions are reference values. They may vary depending on the pressure rating, design and order option.
2) With order code for "Sensor option", option CG "Sensor extended neck for insulation": values + 110 mm
3) Depends on the liner → 🖹 102

DN 350 to 400 mm (14 to 16 in)

DN		Order code for "Design" Options E, I					
		D [1]	E [2]	F	M	K	L
[mm]	[in]	[mm]	[mm]	[mm]	[mm]	[mm]	[mm]
350	14	282	462	744	564	[3]	550
375	15	308	488	796	616	[3]	600
400	16	308	488	796	616	[3]	600

1) The dimensions are reference values. They may vary depending on the pressure rating, design and order option.
2) For Ex d or XP versions: values + 30 mm
3) Depends on the liner → 🖹 102

DN 450 to 900 mm (18 to 36 in)

DN		Order code for "Design" Options F, J				Options G, K				K	L	
		D [1]	E [1] [2]	F [1] [2]	M [1]	D [1]	E [1] [2]	F [1] [2]	M [1]			
[mm]	[in]	[mm]	[mm]	[mm]	[mm]	[mm]	[mm]	[mm]	[mm]	[mm]	[mm]	
450	18	290	475	765	580	333	518	851	666	[3]	600 [4]	650 [5]
500	20	315	500	815	630	359	544	903	717	[3]	600 [4]	650 [5]
600	24	365	550	915	730	411	596	1007	821	[3]	600 [4]	780 [5]
700	28	426	611	1037	851	512	697	1209	1024	[3]	700 [4]	910 [5]
750	30	463	648	1111	926	512	697	1209	1024	[3]	750 [4]	975 [5]
800	32	482	667	1149	964	534	719	1253	1065	[3]	800 [4]	1040 [5]
900	36	532	717	1249	1064	610	795	1405	1218	[3]	900 [4]	1170 [5]

1) The dimensions are reference values. They may vary depending on the pressure rating, design and order option.
2) For Ex d or XP versions: values + 30 mm
3) Depends on the liner → 🖹 102
4) Order code for "Design", option F "Fixed flange, short installed length" and option J "Fixed flange, short installed length, 0 x DN inlet/outlet runs"
5) Order code for "Design", option G "Fixed flange, long installed length" and option K "Fixed flange, long installed length 0 x DN inlet/outlet runs"

DN 1000 to 2000 mm (40 to 78 in)

DN		Order code for "Design" Options F, G, J, K						
		D [1]	E [1] [2]	F [1] [2]	M [1]	K	L	
[mm]	[in]	[mm]	[mm]	[mm]	[mm]	[mm]	[mm]	
1000	40	582	767	1349	1164	[3]	1000 [4]	1300 [5]
–	42	618	803	1421	1236	[3]	1050 [4]	1365 [5]
1200	48	696	881	1577	1392	[3]	1200 [4]	1560 [5]
–	54	809	994	1803	1617	[3]	1350 [4]	1755 [5]
1400	–	809	994	1803	1617	[3]	1400 [4]	1820 [5]
–	60	909	1094	2003	1817	[3]	1500 [4]	1950 [5]
1600	–	909	1094	2003	1817	[3]	1600 [4]	2080 [5]
–	66	960	1145	2105	1919	[3]	1650 [4]	2145 [5]

DN		Order code for "Design" Options F, G, J, K				K	L	
		D [1]	E [1] [2]	F [1] [2]	M [1]			
[mm]	[in]	[mm]	[mm]	[mm]	[mm]	[mm]	[mm]	
1800	72	1016	1201	2217	2032	[3]	1800 [4]	2340 [5]
–	78	1127	1312	2439	2254	[3]	2000 [4]	2600 [5]
2000	–	1127	1312	2439	2254	[3]	2000 [4]	2600 [5]

1) The dimensions are reference values. They may vary depending on the pressure rating, design and order option.
2) For Ex d or XP versions: values + 30 mm
3) Depends on the liner → 🖹 102
4) Order code for "Design", option F "Fixed flange, short installed length" and option J "Fixed flange, short installed length, 0 x DN inlet/outlet runs"
5) Order code for "Design", option G "Fixed flange, long installed length" and option K "Fixed flange, long installed length 0 x DN inlet/outlet runs"

DN 2200 to 3000 mm (84 to 120 in)

DN		Order code for "Design" Option F, J				K	L
		D [1]	E [1] [2]	F [1]	M [1]		
[mm]	[in]	[mm]	[mm]	[mm]	[mm]	[mm]	[mm]
–	84	1227	1412	2639	2454	[3]	2200
2200	–	1227	1412	2639	2454	[3]	2200
–	90	1332	1517	2849	2664	[3]	2400
2400	–	1332	1517	2849	2664	[3]	2400
–	96	1431	1616	3047	2861	[3]	2450
–	102	1516	1701	3217	3032	[3]	2600
2600	–	1442	1627	3069	2883	[3]	2600
–	108	1602	1787	3389	3204	[3]	2750
2800	–	1547	1732	3279	3093	[3]	2800
–	114	1688	1873	3561	3375	[3]	2900
3000	–	1647	1832	3479	3293	[3]	3000
–	120	1774	1959	3733	3547	[3]	3050

1) The dimensions are reference values. They may vary depending on the pressure rating, design and order option.
2) For Ex d or XP versions: values + 30 mm
3) Depends on the liner → 🖹 102

Flange connections

Fixed flange

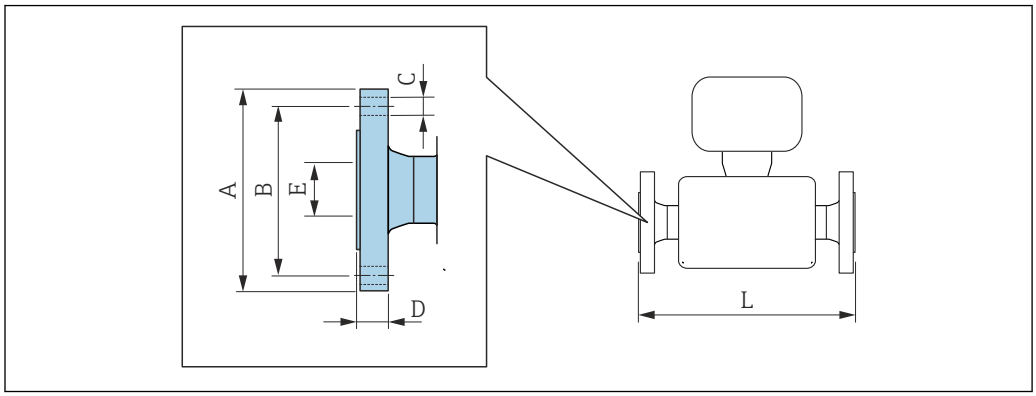

A0015621

Flange according to EN 1092-1 (DIN 2501 / DIN 2512N): PN 6 **Carbon steel:** *order code for "Process connection", option* **D1K** **Stainless steel:** *order code for "Process connection", option* **D1S**						
DN **[mm]**	**A** **[mm]**	**B** **[mm]**	**C** **[mm]**	**D** **[mm]**	**E** **[mm]**	**L** **[mm]**
350	490	445	12 × Ø22	22	1)	2)
400	540	495	16 × Ø22	22		
450	595	565	20 × Ø26	22		
500	645	600	20 × Ø22	24		
600	755	705	20 × Ø26	30		
700	860	810	24 × Ø26	30		
800	975	920	24 × Ø30	30		
900	1075	1020	24 × Ø30	34		
1000	1175	1120	28 × Ø30	38		
1200	1405	1340	32 × Ø33	42		
1400	1630	1560	36 × Ø36	56		
1600	1830	1760	40 × Ø36	63		
1800	2045	1970	44 × Ø39	69		
2000	2265	2180	48 × Ø42	74		
2200	2475	2390	52 × Ø42	81		
2400	2685	2600	56 × Ø42	87		
2600	2905	2810	60 × Ø48	91		
2800	3115	3020	64 × Ø48	101		
3000	3315	3220	68 × Ø48	102		
Surface roughness (flange): EN 1092-1 Form B1 (DIN 2526 Form C), Ra 6.3 to 12.5 µm						

1) Depends on the liner → 🖹 102
2) Total installed length is independent of the process connections. Length according to DVGW (German Technical and Scientific Association for Gas and Water) → 🖹 72

Flange according to EN 1092-1 (DIN 2501 / DIN 2512N): PN 10
Carbon steel: *order code for "Process connection", option* **D2K**
Stainless steel: *order code for "Process connection", option* **D2S**

DN [mm]	A [mm]	B [mm]	C [mm]	D [mm]	E [mm]	L [mm]
200	340	295	8 × Ø22	24	1)	2)
250	395	350	12 × Ø22	26		
300	445	400	12 × Ø22	26		
350	505	460	16 × Ø22	26		
400	565	515	16 × Ø26	26		
450	615	565	20 × Ø26	28		
500	670	620	20 × Ø26	28		
600	780	725	20 × Ø30	30		
700	895	840	24 × Ø30	35		
800	1015	950	24 × Ø33	38		
900	1115	1050	28 × Ø33	38		
1000	1230	1160	28 × Ø36	44		
1200	1455	1380	32 × Ø39	55		
1400	1675	1590	36 × Ø42	65		
1600	1915	1820	40 × Ø48	75		
1800	2115	2020	44 × Ø48	85		
2000	2325	2230	48 × Ø48	90		
2200	2550	2440	52 × Ø56	100		
2400	2760	2650	56 × Ø56	110		
2600	2960	2850	60 × Ø56	110		
2800	3180	3070	64 × Ø56	124		
3000	3405	3290	68 × Ø62	132		

Surface roughness (flange): EN 1092-1 Form B1 (DIN 2526 Form C), Ra 6.3 to 12.5 µm

1) Depends on the liner → 🖹 102
2) Total installed length is independent of the process connections. Length according to DVGW (German Technical and Scientific Association for Gas and Water) → 🖹 72

Flange according to EN 1092-1 (DIN 2501 / DIN 2512N): PN 16
Carbon steel: *order code for "Process connection", option* **D3K**
Stainless steel: *order code for "Process connection", option* **D3S**

DN [mm]	A [mm]	B [mm]	C [mm]	D [mm]	E [mm]	L [mm]
65	185	145	8 × Ø18	20	1)	2)
80	200	160	8 × Ø18	20		
100	220	180	8 × Ø18	22		
125	250	210	8 × Ø18	24		
150	285	240	8 × Ø22	24		
200	340	295	12 × Ø22	26		
250	405	355	12 × Ø26	32		
300	460	410	12 × Ø26	32		
350	520	470	16 × Ø26	30		

Flange according to EN 1092-1 (DIN 2501 / DIN 2512N): PN 16
Carbon steel: *order code for "Process connection", option* **D3K**
Stainless steel: *order code for "Process connection", option* **D3S**

DN [mm]	A [mm]	B [mm]	C [mm]	D [mm]	E [mm]	L [mm]
400	580	525	16 × Ø30	32		
450	640	585	20 × Ø30	34		
500	715	650	20 × Ø33	36		
600	840	770	20 × Ø36	40		
700	910	840	24 × Ø36	40		
800	1025	950	24 × Ø39	41		
900	1125	1050	28 × Ø39	48		
1000	1255	1170	28 × Ø42	59		
1200	1485	1390	32 × Ø48	78		
1400	1685	1590	36 × Ø48	84		
1600	1930	1820	40 × Ø56	102		
1800	2130	2020	44 × Ø56	110		
2000	2345	2230	48 × Ø62	124		

Surface roughness (flange): EN 1092-1 Form B1 (DIN 2526 Form C), Ra 6.3 to 12.5 µm

1) Depends on the liner → 🖹 102
2) Total installed length is independent of the process connections. Length according to DVGW (German Technical and Scientific Association for Gas and Water) → 🖹 72

Flange according to EN 1092-1 (DIN 2501 / DIN 2512N): PN 25
Carbon steel: *order code for "Process connection", option* **D4K**
Stainless steel: *order code for "Process connection", option* **D4S**

DN [mm]	A [mm]	B [mm]	C [mm]	D [mm]	E [mm]	L [mm]
200	360	310	12 × Ø26	32	1)	2)
250	425	370	12 × Ø30	36		
300	485	430	16 × Ø30	40		
350	555	490	16 × Ø33	38		
400	620	550	16 × Ø36	40		
450	670	600	20 × Ø36	46		
500	730	660	20 × Ø36	48		
600	845	770	20 × Ø39	48		
700	960	875	24 × Ø42	50		
800	1085	990	24 × Ø48	53		
900	1185	1090	28 × Ø48	57		
1000	1320	1210	28 × Ø56	63		

Surface roughness (flange): EN 1092-1 Form B1 (DIN 2526 Form C), Ra 6.3 to 12.5 µm

1) Depends on the liner → 🖹 102
2) Total installed length is independent of the process connections. Length according to DVGW (German Technical and Scientific Association for Gas and Water) → 🖹 72

Flange according to EN 1092-1 (DIN 2501 / DIN 2512N): PN 40
Carbon steel: *order code for "Process connection", option* **D5K**
Stainless steel: *order code for "Process connection", option* **D5S**

DN [mm]	A [mm]	B [mm]	C [mm]	D [mm]	E [mm]	L [mm]
25	115	85	4 × Ø14	16	1)	2)
32	140	100	4 × Ø18	18		
40	150	110	4 × Ø18	18		
50	165	125	4 × Ø18	20		
65	185	145	8 × Ø18	24		
80	200	160	8 × Ø18	26		
100	235	190	8 × Ø22	26		
125	270	220	8 × Ø26	28		
150	300	250	8 × Ø26	30		

Surface roughness (flange): EN 1092-1 Form B1 (DIN 2526 Form C), Ra 6.3 to 12.5 µm

1) Depends on the liner → 🖹 102
2) Total installed length is independent of the process connections. Length according to DVGW (German Technical and Scientific Association for Gas and Water) → 🖹 72

Flange according to ASME B16.5, Class 150
Carbon steel: *order code for "Process connection", option* **A1K**
Stainless steel: *order code for "Process connection", option* **A1S**

DN		A	B	C	D	E	L
[mm]	[in]	[mm]	[mm]	[mm]	[mm]	[mm]	[mm]
25	1	108	79.2	4 × Ø16	12.6	1)	2)
40	1 ½	127	98.6	4 × Ø16	15.9		
50	2	152.4	120.7	4 × Ø19.1	17.5		
80	3	190.5	152.4	4 × Ø19.1	22.3		
100	4	228.6	190.5	8 × Ø19.1	22.3		
150	6	279.4	241.3	8 × Ø22.4	23.8		
200	8	342.9	298.5	8 × Ø22.4	26.8		
250	10	406.4	362	12 × Ø25.4	29.6		
300	12	482.6	431.8	12 × Ø25.4	30.2		
350	14	535	476.3	12 × Ø28.6	35.4		
400	16	595	539.8	16 × Ø28.6	37		
450	18	635	577.9	16 × Ø31.8	40.1		
500	20	700	635	20 × Ø31.8	43.3		
600	24	815	749.3	20 × Ø34.9	48.1		

Surface roughness (flange): Ra 6.3 to 12.5 µm

1) Depends on the liner → 🖹 102
2) Total installed length is independent of the process connections. Length according to DVGW (German Technical and Scientific Association for Gas and Water) → 🖹 72

Flange according to ASME B16.5, Class 300
Carbon steel: *order code for "Process connection", option* **A2K**
Stainless steel: *order code for "Process connection", option* **A2S**

DN		A	B	C	D	E	L
[mm]	[in]	[mm]	[mm]	[mm]	[mm]	[mm]	[mm]
25	1	123.9	88.9	4 × Ø19.1	15.9	1)	2)
40	1 ½	155.4	114.3	4 × Ø22.4	19		
50	2	165.1	127	8 × Ø19.1	20.8		
80	3	209.6	168.1	8 × Ø22.4	26.8		
100	4	254	200.2	8 × Ø22.4	30.2		
150	6	317.5	269.7	12 × Ø22.4	35		
Surface roughness (flange): Ra 6.3 to 12.5 µm							

1) Depends on the liner → 🖹 102
2) Total installed length is independent of the process connections. Length according to DVGW (German Technical and Scientific Association for Gas and Water) → 🖹 72

Flange according to JIS B2220, 10K
Carbon steel: *order code for "Process connection", option* **N3K**
Stainless steel: *order code for "Process connection", option* **N3S**

DN [mm]	A [mm]	B [mm]	C [mm]	D [mm]	E [mm]	L [mm]
50	155	120	4 × Ø19	16	1)	2)
65	175	140	4 × Ø19	18		
80	185	150	8 × Ø19	18		
100	210	175	8 × Ø19	18		
125	250	210	8 × Ø23	20		
150	280	240	8 × Ø23	22		
200	330	290	12 × Ø23	22		
250	400	355	12 × Ø25	24		
300	445	400	16 × Ø25	24		
Surface roughness (flange): Ra 6.3 to 12.5 µm						

1) Depends on the liner → 🖹 102
2) Total installed length is independent of the process connections. Length according to DVGW (German Technical and Scientific Association for Gas and Water) → 🖹 72

Flange according to JIS B2220, 20K
Carbon steel: *order code for "Process connection", option* **N4K**
Stainless steel: *order code for "Process connection", option* **N4S**

DN [mm]	A [mm]	B [mm]	C [mm]	D [mm]	E [mm]	L [mm]
25	125	90	4 × Ø19	16	1)	2)
32	135	100	4 × Ø19	18		
40	140	105	4 × Ø19	18		
50	155	120	8 × Ø19	18		
65	175	140	8 × Ø19	20		
80	200	160	8 × Ø23	22		
100	225	185	8 × Ø23	24		

Flange according to JIS B2220, 20K
Carbon steel: *order code for "Process connection", option* **N4K**
Stainless steel: *order code for "Process connection", option* **N4S**

DN [mm]	A [mm]	B [mm]	C [mm]	D [mm]	E [mm]	L [mm]
125	270	225	8 × Ø25	26		
150	305	260	12 × Ø25	28		
200	350	305	12 × Ø25	30		
250	430	380	12 × Ø27	34		
300	480	430	16 × Ø27	36		
Surface roughness (flange): Ra 6.3 to 12.5 µm						

1) Depends on the liner → 🖹 102
2) Total installed length is independent of the process connections. Length according to DVGW (German Technical and Scientific Association for Gas and Water) → 🖹 72

Flange according to AWWA, Class D
Order code for "Process connection", option **W1K**

DN		A	B	C	D	E	L
[mm]	[in]	[mm]	[mm]	[mm]	[mm]	[mm]	[mm]
700	28	927	863.6	28 × Ø35	33.4	1)	2)
750	30	984	914.4	28 × Ø35	35.0		
800	32	1060	977.9	28 × Ø42	38.1		
900	36	1168	1085.9	32 × Ø42	41.3		
1000	40	1289	1200.2	36 × Ø42	41.3		
–	42	1346	1257.3	36 × Ø42	44.5		
1200	48	1511	1422.4	44 × Ø42	47.7		
–	54	1683	1593.9	44 × Ø48	54.0		
–	60	1855	1759.0	52 × Ø48	57.2		
–	66	2032	1930.4	52 × Ø48	63.5		
1800	72	2197	2095.5	60 × Ø48	66.7		
–	78	2362	2260.6	64 × Ø54	69.9		
–	84	2535	2425.7	64 × Ø54	73.1		
–	90	2705	2717.8	68 × Ø60	76.2		
–	96	2877	2755.9	68 × Ø60.3	82.55		
–	102	3048	2908.3	68 × Ø66.7	82.55		
–	108	3219	3067.0	68 × Ø66.7	85.73		
–	114	3391	3219.5	68 × Ø73	88.90		
–	120	3562	3371.8	68 × Ø73	88.90		
Surface roughness (flange): Ra 6.3 to 12.5 µm							

1) Depends on the liner → 🖹 102
2) Total length is independent of the process connections. Installed length according to DVGW (German Technical and Scientific Association for Gas and Water) → 🖹 72

Flange according to AS 2129, Tab. E
Order code for "Process connection", option **M2K**

DN [mm]	A [mm]	B [mm]	C [mm]	D [mm]	E [mm]	L [mm]
80	185	146	4 × Ø18	12	1)	2)
100	215	178	8 × Ø18	13		
150	280	235	8 × Ø22	17		
200	335	292	8 × Ø22	19		
250	405	356	12 × Ø22	22		
300	455	406	12 × Ø26	25		
350	525	470	12 × Ø26	30		
400	580	521	12 × Ø26	32		
450	640	584	16 × Ø26	35		
500	705	641	16 × Ø26	38		
600	825	756	16 × Ø33	48		
700	910	845	20 × Ø33	51		
750	995	927	20 × Ø36	54		
800	1060	984	20 × Ø36	54		
900	1175	1092	24 × Ø36	64		
1000	1255	1175	24 × Ø39	67		
1200	1490	1410	32 × Ø39	79		
Surface roughness (flange): Ra 6.3 to 12.5 µm						

1) Depends on the liner → 🖹 102
2) Total installed length is independent of the process connections. Length according to DVGW (German Technical and Scientific Association for Gas and Water) → 🖹 72

Flange according to AS 4087, PN 16
Order code for "Process connection", option **M3K**

DN [mm]	A [mm]	B [mm]	C [mm]	D [mm]	E [mm]	L [mm]
80	185	146	4 × Ø18	12	1)	2)
100	215	178	4 × Ø18	13		
150	280	235	8 × Ø18	13		
200	335	292	8 × Ø18	19		
250	405	356	8 × Ø22	19		
300	455	406	12 × Ø22	23		
350	525	470	12 × Ø26	30		
375	550	495	12 × Ø26	30		
400	580	521	12 × Ø26	32		
450	640	584	12 × Ø26	30		
500	705	641	16 × Ø26	38		
600	825	756	16 × Ø30	48		
700	910	845	20 × Ø30	56		
750	995	927	20 × Ø33	56		
800	1060	984	20 × Ø36	56		

Flange according to AS 4087, PN 16 *Order code for "Process connection", option* **M3K**						
DN [mm]	**A [mm]**	**B [mm]**	**C [mm]**	**D [mm]**	**E [mm]**	**L [mm]**
900	1175	1092	24 × Ø36	66		
1000	1255	1175	24 × Ø36	66		
1200	1490	1410	32 × Ø36	76		
Surface roughness (flange): Ra 6.3 to 12.5 µm						

1) Depends on the liner → 🖹 102
2) Total installed length is independent of the process connections. Length according to DVGW (German Technical and Scientific Association for Gas and Water) → 🖹 72

Lap joint flange

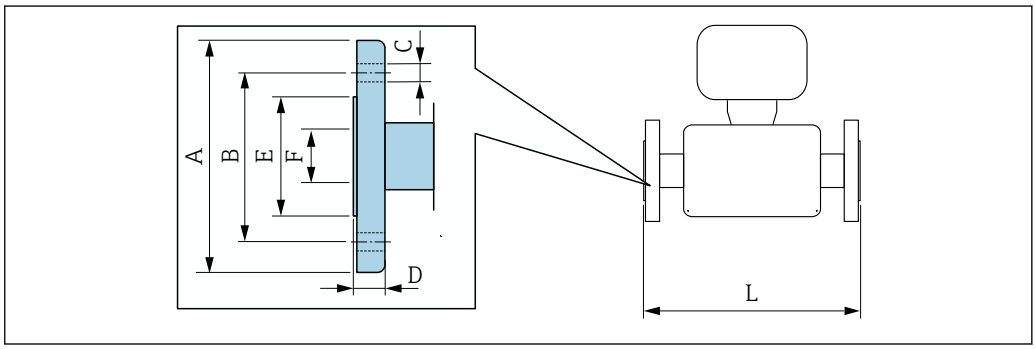

A0037862

Lap joint flange similar to EN 1092-1 (DIN 2501/ DIN 2512N): PN 10 **Carbon steel:** *order code for "Process connection", option* **D22** **Stainless steel:** *order code for "Process connection", option* **D24**								
DN		**A**	**B**	**C**	**D**	**E**	**F**	**L**
[mm]	**[in]**	**[mm]**	**[mm]**	**[mm]**	**[mm]**	**[mm]**	**[mm]**	**[mm]**
200	8	340	295	8 × Ø22	24	264	1)	2)
250	10	395	350	12 × Ø22	26	317		
300	12	445	400	12 × Ø22	26	367		
Surface roughness (flange): Ra 6.3 to 12.5 µm								

1) Depends on the liner → 🖹 102
2) Total length is independent of the process connections. Installed length according to DVGW (German Technical and Scientific Association for Gas and Water) → 🖹 72

Lap joint flange similar to EN 1092-1 (DIN 2501/DIN 2512N): PN 16 **Carbon steel:** *order code for "Process connection", option* **D32** **Stainless steel:** *order code for "Process connection", option* **D34**								
DN		**A**	**B**	**C**	**D**	**E**	**F**	**L**
[mm]	**[in]**	**[mm]**	**[mm]**	**[mm]**	**[mm]**	**[mm]**	**[mm]**	**[mm]**
25	1	115	85	4 × Ø14	16	49	1)	2)
32	-	140	100	4 × Ø18	18	65		
40	1 ½	150	110	4 × Ø18	18	71		
50	2	165	125	4 × Ø18	20	88		
65	-	185	145	8 × Ø18	20	103		
80	3	200	160	8 × Ø18	20	120		

Lap joint flange similar to EN 1092-1 (DIN 2501/DIN 2512N): PN 16
Carbon steel: *order code for "Process connection", option* **D32**
Stainless steel: *order code for "Process connection", option* **D34**

DN		A	B	C	D	E	F	L
[mm]	[in]	[mm]	[mm]	[mm]	[mm]	[mm]	[mm]	[mm]
100	4	220	180	8 × Ø18	22	148		
125	-	250	210	8 × Ø18	22	177		
150	6	285	240	8 × Ø22	24	209		
200	8	340	295	12 × Ø22	26	264		
250	10	405	355	12 × Ø26	29	317		
300	12	460	410	12 × Ø26	32	367		
Surface roughness (flange): Ra 6.3 to 12.5 µm								

1) Depends on the liner → 🖹 102
2) Total length is independent of the process connections. Installed length according to DVGW (German Technical and Scientific Association for Gas and Water) → 🖹 72

Lap joint flange according to ASME B16.5, Class 150
Carbon steel: *order code for "Process connection", option* **A12**
Stainless steel: *order code for "Process connection", option* **A14**

DN		A	B	C	D	E	F	L
[mm]	[in]	[mm]	[mm]	[mm]	[mm]	[mm]	[mm]	[mm]
25	1	110	80	4 × Ø16	14	49	1)	2)
40	1 ½	125	98	4 × Ø16	17.5	71		
50	2	150	121	4 × Ø19	19	88		
80	3	190	152	4 × Ø19	24	120		
100	4	230	190	8 × Ø19	24	148		
150	6	280	241	8 × Ø23	25	209		
200	8	345	298	8 × Ø23	29	264		
250	10	405	362	12 × Ø25	30	317		
300	12	485	432	12 × Ø25	32	378		
Surface roughness (flange): Ra 6.3 to 12.5 µm								

1) Depends on the liner → 🖹 102
2) Total length is independent of the process connections. Installed length according to DVGW (German Technical and Scientific Association for Gas and Water) → 🖹 72

Lap joint flange, stamped plate

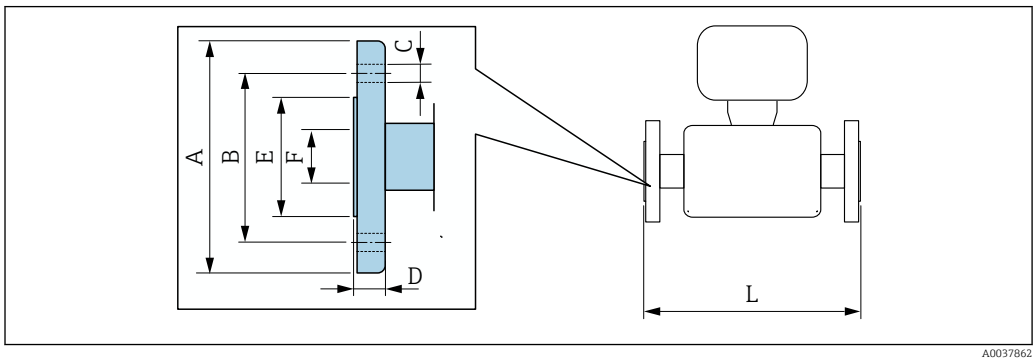

A0037862

Unassembled lap joint flange similar to EN 1092-1 (DIN 2501/DIN 2512N): PN 10 **Carbon steel:** *order code for "Process connection", option* **D21** **Stainless steel:** *order code for "Process connection", option* **D23**							
DN **[mm]**	**A** **[mm]**	**B** **[mm]**	**C** **[mm]**	**D** **[mm]**	**E** **[mm]**	**F** **[mm]**	**L** **[mm]**
25	115	85	4 x Ø13.5	16.5	49	1)	2)
32	140	100	4 x Ø17.5	17	65		
40	150	110	4 x Ø17.5	16.5	71		
50	165	125	4 x Ø17.5	18.5	88		
65	185	145	4 x Ø17.5	20	103		
80	200	160	8 x Ø17.5	23.5	120		
100	220	180	8 x Ø17.5	24.5	148		
125	250	210	8 x Ø17.5	24	177		
150	285	240	8 x Ø21.5	25	209		
200	340	295	8 x Ø21.5	27.5	264		
250	405	350	12 x Ø21.5	30.5	317		
300	445	400	12 x Ø21.5	34.5	367		
Surface roughness (flange): Ra 6.3 to 12.5 µm							

1) Depends on the liner → 🖹 102
2) Total length is independent of the process connections. Installed length according to DVGW (German Technical and Scientific Association for Gas and Water) → 🖹 72

Accessories

External WLAN antenna

The external WLAN antenna is not suitable for use in hygienic applications.

External WLAN antenna mounted on device

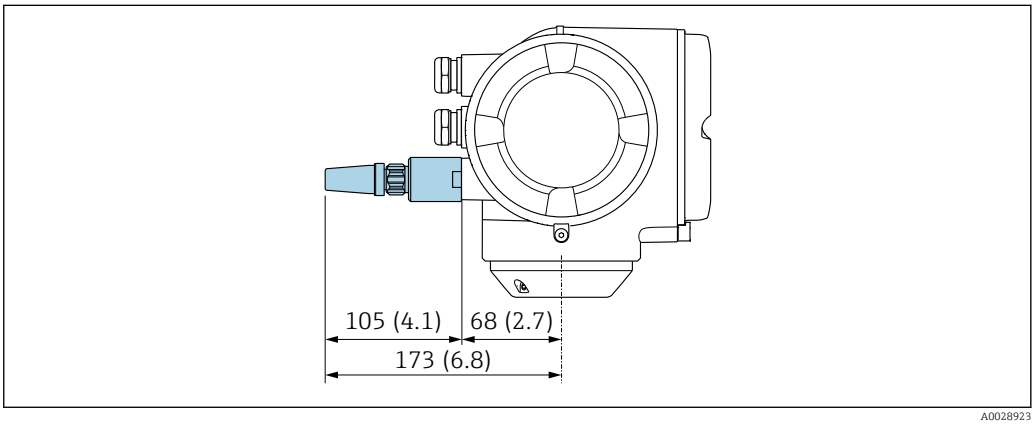

29 *Unit mm (in)*

External WLAN antenna mounted with cable

The external WLAN antenna can be mounted separately from the transmitter if the transmission/ reception conditions at the transmitter mounting location are poor.

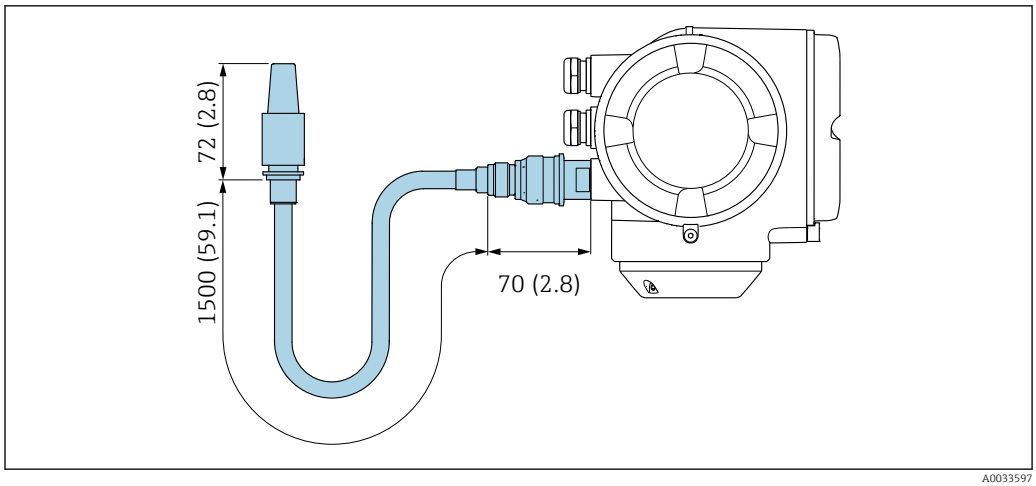

30 Unit mm (in)

Ground disks for flange connections

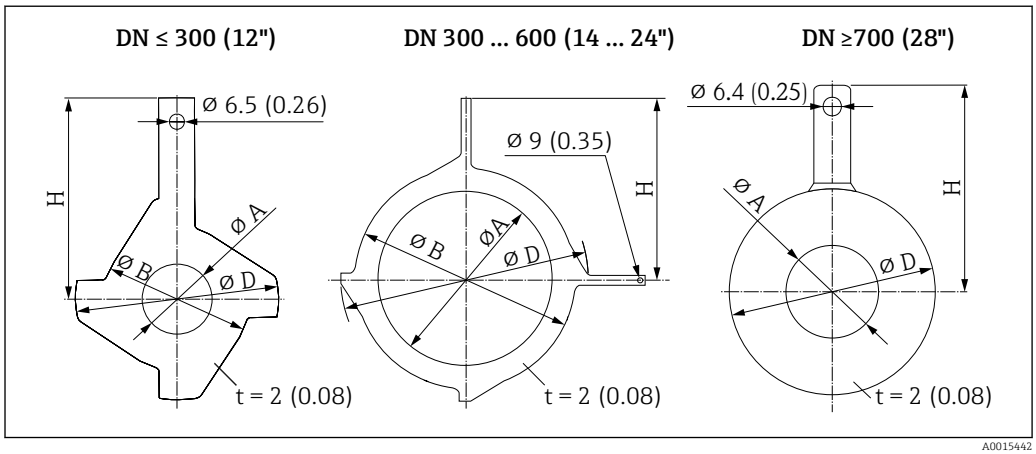

DN		Pressure rating	A		B		D		H	
[mm]	[inch]		[mm]	[inch]	[mm]	[inch]	[mm]	[inch]	[mm]	[inch]
25	1"	[1]	26	1.02	62	2.44	77.5	3.05	87.5	3.44
32	1 ¼"	[1]	35	1.38	80	3.15	87.5	3.44	94.5	3.72
40	1 ½"	[1]	41	1.61	82	3.23	101	3.98	103	4.06
50	2"	[1]	52	2.05	101	3.98	115.5	4.55	108	4.25
65	2 ½"	[1]	68	2.68	121	4.76	131.5	5.18	118	4.65
80	3"	[1]	80	3.15	131	5.16	154.5	6.08	135	5.31
100	4"	[1]	104	4.09	156	6.14	186.5	7.34	153	6.02
125	5"	[1]	130	5.12	187	7.36	206.5	8.13	160	6.30
150	6"	[1]	158	6.22	217	8.54	256	10.08	184	7.24
200	8"	[1]	206	8.11	267	10.51	288	11.34	205	8.07
250	10"	[1]	260	10.2	328	12.91	359	14.13	240	9.45
300	12"	PN 10 PN 16 Cl. 150	312	12.3	375	14.76	413	16.26	273	10.75
		PN 25 JIS 10K JIS 20K	310	12.2	375	14.76	404	15.91	268	10.55

DN		Pressure rating	A		B		D		H	
[mm]	[inch]		[mm]	[inch]	[mm]	[inch]	[mm]	[inch]	[mm]	[inch]
350	14"	PN 6	343	13.5	420	16.54	479	18.86	365	14.37
		PN 10								
		PN 16								
375	15"	PN 16	393	15.5	461	18.2	523	20.6	395	15.6
400	16"	PN 6	393	15.5	470	18.50	542	21.34	395	15.55
		PN 10								
		PN 16								
450	18"	PN 6	439	17.3	525	20.67	583	22.95	417	16.42
		PN 10								
		PN 16								
500	20"	PN 6	493	19.4	575	22.64	650	25.59	460	18.11
		PN 10								
		PN 16								
600	24"	PN 6	593	23.3	676	26.61	766	30.16	522	20.55
		PN 10								
		PN 16								
700	28"	PN 6	697	27.4	–	–	786	30.94	460	18.11
		PN10	693	27.3	–	–	813	32.01	480	18.9
		PN16	687	27.1	–	–	807	31.77	490	19.29
		Cl, D	693	27.3	–	–	832	32.76	494	19.45
750	30"	Cl, D	743	29.3	–	–	883	34.76	523	20.59
800	32"	PN 6	799	31.5	–	–	893	35.16	520	20.47
		PN 10	795	31.3	–	–	920	36.22	540	21.26
		PN 16	789	31.1	–	–	914	35.98	550	21.65
		Cl, D	795	31.3	–	–	940	37.01	561	22.09
900	36"	PN 6	897	35.3	–	–	993	39.09	570	22.44
		PN 10	893	35.2	–	–	1020	40.16	590	23.23
		PN 16	886	34.9	–	–	1014	39.92	595	23.43
		Cl, D	893	35.2	–	–	1048	41.26	615	24.21
1000	40"	PN 6	999	39.3	–	–	1093	43.03	620	24.41
		PN 10	995	39.2	–	–	1127	44.37	650	25.59
		PN 16	988	38.9	–	–	1131	44.53	660	25.98
		Cl, D	995	39.2	–	–	1163	45.79	675	26.57
–	42"	Cl, D	1044	41.1	–	–	1220	48.03	704	27.72
1200	48"	PN 6	1203	47.4	–	–	1310	51.57	733	28.86
		PN 10	1196	47.1	–	–	1344	52.91	760	29.92
		PN 16	1188	46.8	–	–	1345	52.95	775	30.51
		Cl, D	1196	47.1	–	–	1385	54.53	786	30.94

1) In the case of DN 25 to 250, ground disks can be used for all the flange standards/pressure ratings which can be supplied in the standard version

Dimensions in US units

Compact version

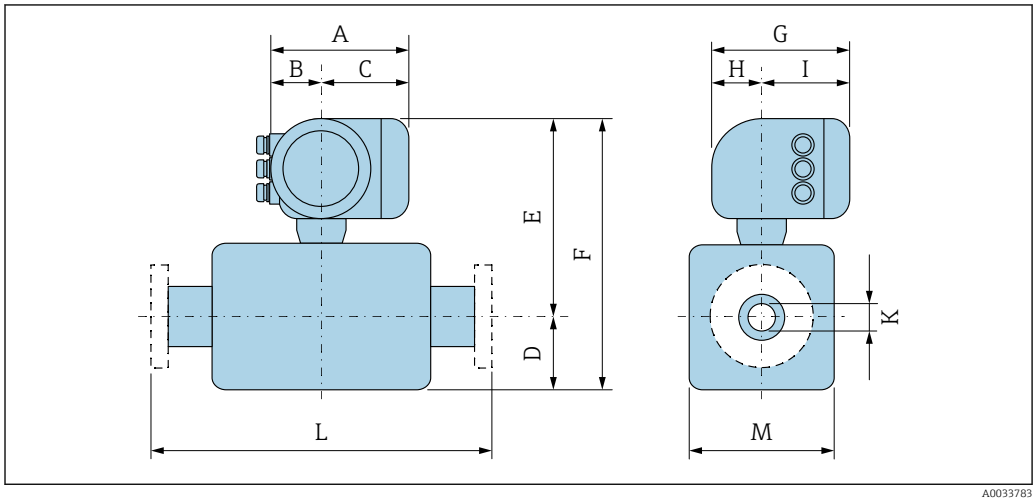

Order code for "Housing", option A "Aluminum, coated"

A [1] [in]	B [1] [in]	C [in]	G [2] [in]	H [in]	I [2] [in]
6.65	2.68	3.98	7.87	2.32	5.55

1) Depending on the cable gland used: values up to + 1.18 in
2) For version without local display: values − 1.18 in

Order code for "Housing", option A "Aluminum, coated"; Ex d or XP

A [1] [in]	B [in]	C [in]	G [2] [in]	H [in]	I [in]
7.4	3.35	4.06	8.54	2.28	6.26

1) Depending on the cable gland used: values up to + 1.18 in
2) For version without local display: values − 1.57 in

DN 1 to 12 in (25 to 300 mm): Sensor with aluminum half-shell housing

DN		Order code for "Design"									
		Options D, E, H, I				Option C					
		D [1]	E [1) 2) 3)]	F [1) 2) 3)]	M [1]	D [1]	E [1) 2) 3)]	F [1) 2) 3)]	M [1]	K	L
[mm]	[in]	[in]	[in]	[in]	[in]	[in]	[in]	[in]	[in]	[in]	[in]
25	1	3.31	10.67	13.98	4.72	–	–	–	–	[4]	7.87
32	–	3.31	10.67	13.98	4.72	–	–	–	–	[4]	7.87
40	1 ½	3.31	10.67	13.98	4.72	–	–	–	–	[4]	7.87
50	2	3.31	10.67	13.98	4.72	3.31	10.67	13.98	4.72	[4]	7.87
65	–	4.29	11.65	15.94	7.09	3.31	10.67	13.98	4.72	[4]	7.87
80	3	4.29	11.65	15.94	7.09	3.31	10.67	13.98	4.72	[4]	7.87
100	4	4.29	11.65	15.94	7.09	4.29	11.65	15.94	7.09	[4]	9.84
125	–	5.91	13.23	19.13	10.24	4.29	11.65	15.94	7.09	[4]	9.84
150	6	5.91	13.23	19.13	10.24	4.29	11.65	15.94	7.09	[4]	11.81
200	8	7.09	14.21	21.3	12.76	5.91	13.23	19.13	10.24	[4]	13.78

DN		Order code for "Design"									
		Options D, E, H, I				Option C					
		D [1]	E [1) 2) 3)]	F [1) 2) 3)]	M [1]	D [1]	E [1) 2) 3)]	F [1) 2) 3)]	M [1]	K	L
[mm]	[in]	[in]	[in]	[in]	[in]	[in]	[in]	[in]	[in]	[in]	[in]
250	10	8.07	15.2	23.27	15.75	5.91	13.23	19.13	10.24	[4]	17.72
300	12	9.06	16.18	25.24	18.11	7.09	14.21	21.3	12.76	[4]	19.69

1) The dimensions are reference values. They may vary depending on the pressure rating, design and order option.
2) With order code for "Sensor option", option CG "Sensor extended neck for insulation": values + 4.33 in
3) For Ex d or XP versions: values + 1.18 in
4) Depends on the liner → 🖹 102

DN 1 to 12 in (25 to 300 mm): Sensor with fully welded carbon steel housing

DN		Order code for "Design"									
		Option E				Option C					
		D [1]	E [1) 2)]	F [1) 2)]	M [1]	D [1]	E [1) 2)]	F [1) 2)]	M [1]	K	L
[mm]	[in]	[mm]	[mm]	[mm]	[mm]	[mm]	[mm]	[mm]	[mm]	[mm]	[mm]
25	1	2.76	11.42	14.17	5.51	–	–	–	–	[3]	7.87
32	–	2.76	11.42	14.17	5.51	–	–	–	–	[3]	7.87
40	1 ½	2.76	11.42	14.17	5.51	–	–	–	–	[3]	7.87
50	2	2.76	11.42	14.17	5.51	2.76	11.42	14.17	5.51	[3]	7.87
65	–	3.23	11.89	15.12	6.5	2.76	11.42	14.17	5.51	[3]	7.87
80	3	3.43	12.09	15.51	6.89	2.76	11.42	14.17	5.51	[3]	7.87
100	4	3.94	12.6	16.54	7.87	3.23	11.89	15.12	6.5	[3]	9.84
125	–	4.45	13.11	17.56	8.9	3.43	12.09	15.51	6.89	[3]	9.84
150	6	5.28	13.94	19.21	10.59	3.94	12.6	16.54	7.87	[3]	11.81
200	8	6.3	14.96	21.26	12.6	4.45	13.11	17.56	8.9	[3]	13.78
250	10	7.6	16.26	23.86	15.24	5.28	13.94	19.21	10.59	[3]	17.72
300	12	8.58	17.24	25.83	17.2	6.3	14.96	21.26	12.6	[3]	19.69

1) The dimensions are reference values. They may vary depending on the pressure rating, design and order option.
2) With order code for "Sensor option", option CG "Sensor extended neck for insulation": values + 110 mm
3) Depends on the liner → 🖹 102

DN 14 to 16 in (350 to 400 mm)

DN		Order code for "Design"					
		Options E, I					
		D [1]	E [1) 2)]	F [1) 2)]	M [1]	K	L
[mm]	[in]	[in]	[in]	[in]	[in]	[in]	[in]
350	14	11.10	18.19	29.29	22.20	[3]	21.65
375	15	12.13	19.21	31.34	24.25	[3]	23.62
400	16	12.13	19.21	31.34	24.25	[3]	23.62

1) The dimensions are reference values. They may vary depending on the pressure rating, design and order option.
2) For Ex d or XP versions: values + 1.18 in
3) Depends on the liner → 🖹 102

DN 18 to 36 in (450 to 900 mm)

DN		Order code for "Design"										
		Options F, J				Options G, K						
		D [1]	E [2]	F	M	D	E	F	M	K	L	
[mm]	[in]	[in]	[in]	[in]	[in]	[in]	[in]	[in]	[in]	[in]	[in]	
450	18	11.42	18.7	30.12	22.83	13.11	20.39	33.5	26.22	[3]	23.62 [4]	25.59 [5]
500	20	12.40	19.69	32.09	24.80	14.13	21.42	35.55	28.23		23.62	25.59
600	24	14.37	21.65	36.02	28.74	16.18	23.46	39.65	32.32		23.62	30.71
700	28	16.77	24.06	40.83	33.50	20.16	27.44	47.6	40.31		27.56	35.83
750	30	18.23	25.51	43.74	36.46	20.16	27.44	47.6	40.31		29.53	38.39
800	32	18.98	26.26	45.24	37.95	21.02	28.31	49.33	41.93		31.5	40.94
900	36	20.94	28.23	49.17	41.89	24.02	31.3	55.31	47.95		35.43	46.06

1) The dimensions are reference values. They may vary depending on the pressure rating, design and order option.
2) For Ex d or XP versions: values + 1.18 in
3) Depends on the liner → 🖹 102
4) Order code for "Design", option F "Fixed flange, short installed length" and option J "Fixed flange, short installed length, 0 x DN inlet/outlet runs"
5) Order code for "Design", option G "Fixed flange, long installed length" and option K "Fixed flange, long installed length 0 x DN inlet/outlet runs"

DN 40 to 78 in (1000 to 2000 mm)

DN		Order code for "Design"						
		Options F, G, J, K						
		D [1]	E [1] [2]	F [1] [2]	M [1]	K	L	
[mm]	[in]	[in]	[in]	[in]	[in]	[in]	[in]	
1000	40	22.91	30.2	53.11	45.83	[3]	39.37 [4]	51.18 [5]
–	42	24.33	31.61	55.94	48.66	[3]	41.34 [4]	53.74 [5]
1200	48	27.40	34.69	62.09	54.80	[3]	47.24 [4]	61.42 [5]
–	54	31.85	39.13	70.98	63.66	[3]	53.15 [4]	69.09 [5]
1400	–	31.85	39.13	70.98	63.66	[3]	55.12 [4]	71.65 [5]
–	60	35.79	43.07	78.86	71.54	[3]	59.06 [4]	76.77 [5]
1600	–	35.79	43.07	78.86	71.54	[3]	62.99 [4]	81.89 [5]
–	66	37.80	45.08	82.87	75.55	[3]	64.96 [4]	84.45 [5]
1800	72	40.00	47.28	87.28	80.00	[3]	70.87 [4]	92.13 [5]
–	78	44.37	51.65	96.02	88.74	[3]	78.74 [4]	102.36 [5]
2000	–	44.37	51.65	96.02	88.74	[3]	78.74 [4]	102.36 [5]

1) The dimensions are reference values. They may vary depending on the pressure rating, design and order option.
2) For Ex d or XP versions: values + 1.18 in
3) Depends on the liner → 🖹 102
4) Order code for "Design", option F "Fixed flange, short installed length" and option J "Fixed flange, short installed length, 0 x DN inlet/outlet runs"
5) Order code for "Design", option G "Fixed flange, long installed length" and option K "Fixed flange, long installed length 0 x DN inlet/outlet runs"

DN 84 to 120 in (2200 to 3000 mm)

DN		Order code for "Design" Option F, J				K	L
		D [1]	E [1] [2]	F [1]	M [1]		
[mm]	[in]	[in]	[in]	[in]	[in]	[in]	[in]
–	84	48.31	55.59	103.9	96.61	[3]	86.61
2200	–	48.31	55.59	103.9	96.61	[3]	86.61
–	90	52.44	59.72	112.17	104.88	[3]	94.49
2400	–	52.44	59.72	112.17	104.88	[3]	94.49
–	96	56.34	63.62	119.96	112.64	[3]	96.46
–	102	59.69	66.97	126.65	119.37	[3]	102.36
2600	–	56.77	64.06	120.83	113.50	[3]	102.36
–	108	63.07	70.35	133.43	126.14	[3]	108.27
2800	–	60.91	68.19	129.09	121.77	[3]	110.24
–	114	66.46	73.74	140.2	132.87	[3]	114.17
3000	–	64.84	72.13	136.97	129.65	[3]	118.11
–	120	69.84	77.13	146.97	139.65	[3]	120.08

1) The dimensions are reference values. They may vary depending on the pressure rating, design and order option.
2) For Ex d or XP versions: values + 1.18 in
3) Depends on the liner → 🖹 102

Flange connections

Fixed flange

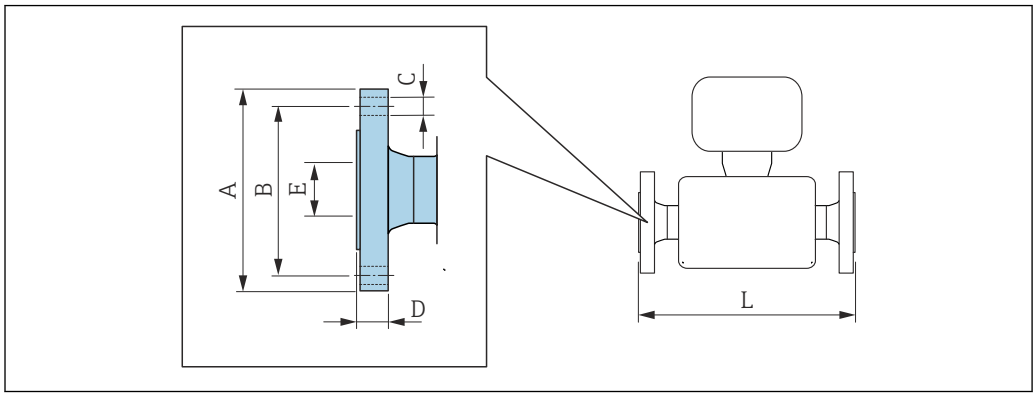

A0015621

Flange according to ASME B16.5, Class 150 **Carbon steel:** *order code for "Process connection", option* **A1K** **Stainless steel:** *order code for "Process connection", option* **A1S**							
DN		**A**	**B**	**C**	**D**	**E**	**L**
[mm]	**[in]**	**[in]**	**[in]**	**[in]**	**[in]**	**[in]**	**[in]**
25	1	4.25	3.12	4 × Ø0.63	0.5	1)	2)
40	1 ½	5	3.88	4 × Ø0.63	0.63		
50	2	6	4.75	4 × Ø0.75	0.69		
80	3	7.5	6	4 × Ø0.75	0.88		
100	4	9	7.5	8 × Ø0.75	0.88		
150	6	11	9.5	8 × Ø0.88	0.94		
200	8	13.5	11.75	8 × Ø0.88	1.06		
250	10	16	14.25	12 × Ø1	1.17		
300	12	19	17	12 × Ø1	1.19		
350	14	21.06	18.75	12 × Ø1.13	1.39		
400	16	23.43	21.25	16 × Ø1.13	1.46		
450	18	25	22.75	16 × Ø1.25	1.58		
500	20	27.56	25	20 × Ø1.25	1.7		
600	24	32.09	29.5	20 × Ø1.37	1.89		
Surface roughness (flange): Ra 250 to 492 µm							

1) Depends on the liner → 🖹 103
2) Total installed length is independent of the process connections. Length according to DVGW (German Technical and Scientific Association for Gas and Water) → 🖹 88

Flange according to ASME B16.5, Class 300 **Carbon steel:** *order code for "Process connection", option* **A2K** **Stainless steel:** *order code for "Process connection", option* **A2S**							
DN		**A**	**B**	**C**	**D**	**E**	**L**
[in]	**[mm]**	**[in]**	**[in]**	**[in]**	**[in]**	**[in]**	**[in]**
1	25	4.88	3.5	4 × Ø0.75	0.63	1)	2)
1 ½	40	6.12	4.5	4 × Ø0.88	0.75		
2	50	6.5	5	8 × Ø0.75	0.82		

Flange according to ASME B16.5, Class 300
Carbon steel: *order code for "Process connection", option* **A2K**
Stainless steel: *order code for "Process connection", option* **A2S**

DN		A	B	C	D	E	L
[in]	[mm]	[in]	[in]	[in]	[in]	[in]	[in]
3	80	8.25	6.62	8 × Ø0.88	1.06		
4	100	10	7.88	8 × Ø0.88	1.19		
6	150	12.5	10.62	12 × Ø0.88	1.38		
Surface roughness (flange): Ra 250 to 492 µm							

1) Depends on the liner → 🖹 103
2) Total installed length is independent of the process connections. Length according to DVGW (German Technical and Scientific Association for Gas and Water) → 🖹 88

Flange according to AWWA, Cl. D
Order code for "Process connection", option **W1K**

DN		A	B	C	D	E	L
[in]	[mm]	[in]	[in]	[in]	[in]	[in]	[in]
28	700	36.50	34.00	28 × Ø1.38	1.31	1)	2)
30	–	38.74	36.00	28 × Ø1.38	1.38		
32	800	41.73	38.50	28 × Ø1.65	1.50		
36	900	45.98	42.75	32 × Ø1.65	1.63		
40	1000	50.75	47.25	36 × Ø1.65	1.63		
42	–	52.99	49.50	36 × Ø1.65	1.75		
48	1200	59.49	56.00	44 × Ø1.65	1.88		
54	–	66.26	62.75	44 × Ø1.89	2.13		
60	–	73.03	69.25	52 × Ø1.89	2.25		
66	–	80.00	76.00	52 × Ø1.89	2.50		
72	1800	86.50	82.50	60 × Ø1.89	2.63		
78	–	92.99	89.00	64 × Ø2.13	2.75		
84	–	99.80	95.50	64 × Ø2.13	2.88		
90	–	106.50	107.00	68 × Ø2.36	3.00		
96	–	113.27	108.50	68 × Ø2.37	3.25		
102	–	120.00	114.50	68 × Ø2.63	3.25		
108	–	126.73	120.75	68 × Ø2.63	3.38		
114	–	133.50	126.75	68 × Ø2.87	3.50		
120	–	140.24	132.75	68 × Ø2.87	3.50		
Surface roughness (flange): Ra 250 to 492 µin							

1) Depends on the liner → 🖹 103
2) Total length is independent of the process connections. Installed length according to DVGW (German Technical and Scientific Association for Gas and Water) → 🖹 88

Lap joint flange

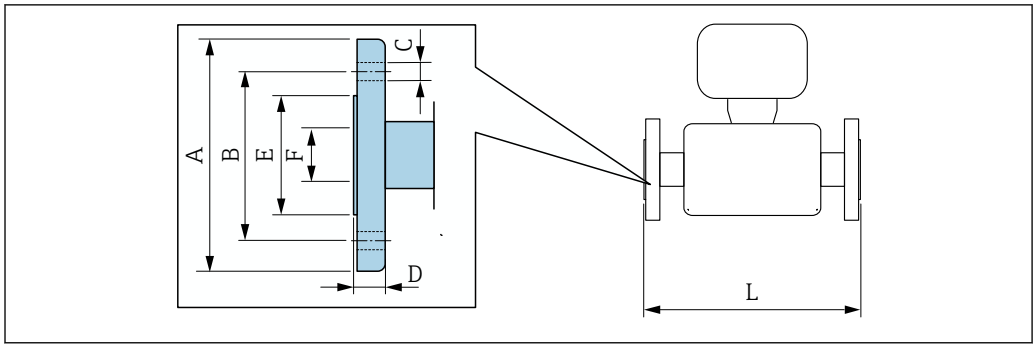

A0037862

Lap joint flange according to ASME B16.5, Class 150 **Carbon steel:** *order code for "Process connection", option* **A12** **Stainless steel:** *order code for "Process connection", option* **A14**								
DN		**A**	**B**	**C**	**D**	**E**	**F**	**L**
[mm]	**[in]**	**[in]**	**[in]**	**[in]**	**[in]**	**[in]**	**[in]**	**[in]**
25	1	4.33	3.15	4 × Ø0.63	0.55	1.93	1)	2)
40	1 ½	4.92	3.86	4 × Ø0.63	0.69	2.8		
50	2	5.91	4.76	4 × Ø0.75	0.75	3.46		
80	3	7.48	5.98	4 × Ø0.75	0.94	4.72		
100	4	9.06	7.48	8 × Ø0.75	0.94	5.83		
150	6	11.02	9.49	8 × Ø0.91	0.98	8.23		
200	8	13.58	11.73	8 × Ø0.91	1.14	10.39		
250	10	15.94	14.25	12 × Ø0.98	1.18	12.48		
300	12	19.09	17.01	12 × Ø0.98	1.26	14.88		
Surface roughness (flange): Ra 248 to 492 µin								

1) Depends on the liner → 🖹 102
2) Total length is independent of the process connections. Installed length according to DVGW (German Technical and Scientific Association for Gas and Water) → 🖹 88

Accessories

External WLAN antenna

The external WLAN antenna is not suitable for use in hygienic applications.

External WLAN antenna mounted on device

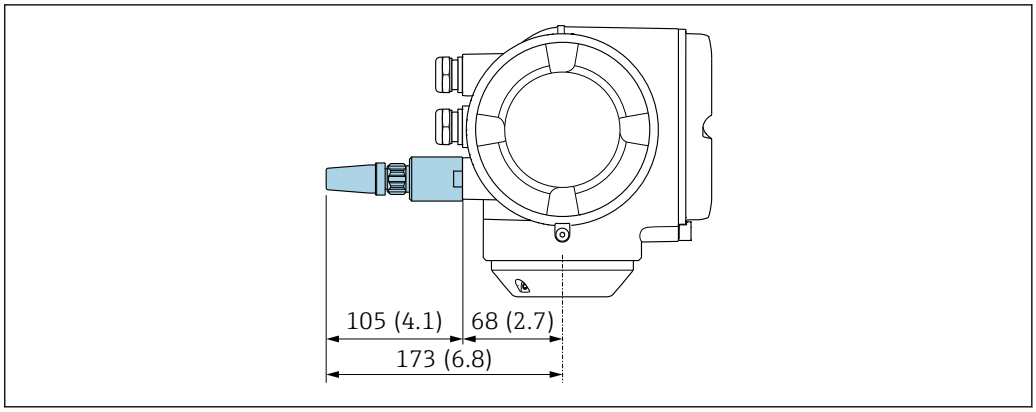

31 Unit mm (in)

External WLAN antenna mounted with cable

The external WLAN antenna can be mounted separately from the transmitter if the transmission/ reception conditions at the transmitter mounting location are poor.

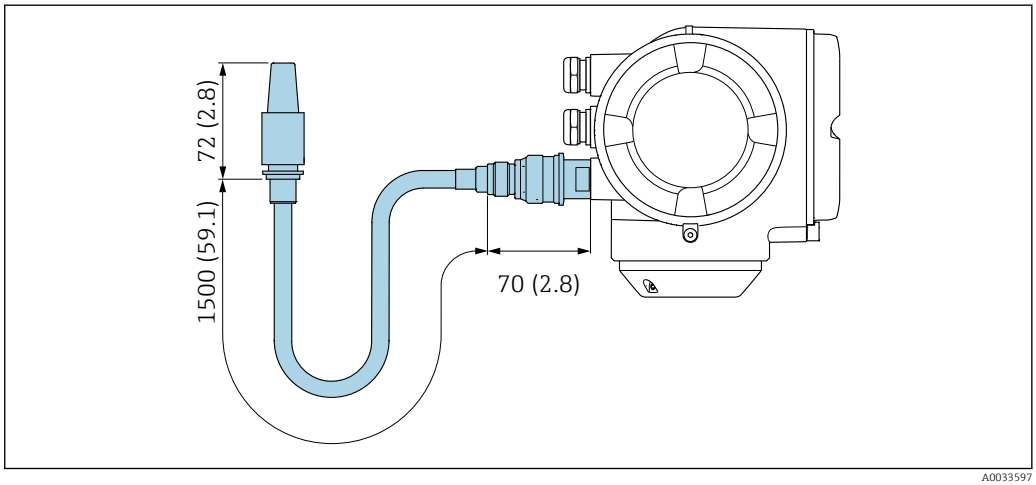

32 Unit mm (in)

Ground disks for flange connections

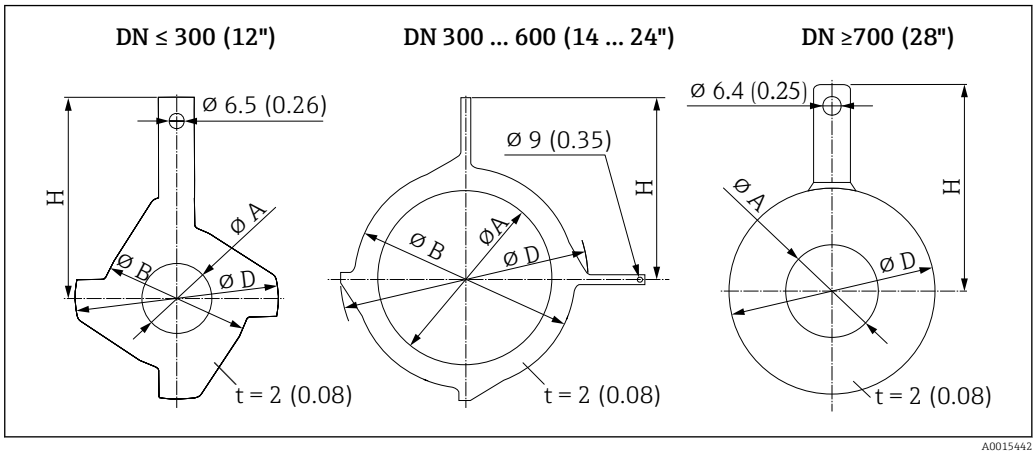

DN		Pressure rating	A		B		D		H	
[mm]	[inch]		[mm]	[inch]	[mm]	[inch]	[mm]	[inch]	[mm]	[inch]
25	1"	1)	26	1.02	62	2.44	77.5	3.05	87.5	3.44
32	1 ¼"	1)	35	1.38	80	3.15	87.5	3.44	94.5	3.72
40	1 ½"	1)	41	1.61	82	3.23	101	3.98	103	4.06
50	2"	1)	52	2.05	101	3.98	115.5	4.55	108	4.25
65	2 ½"	1)	68	2.68	121	4.76	131.5	5.18	118	4.65
80	3"	1)	80	3.15	131	5.16	154.5	6.08	135	5.31
100	4"	1)	104	4.09	156	6.14	186.5	7.34	153	6.02
125	5"	1)	130	5.12	187	7.36	206.5	8.13	160	6.30
150	6"	1)	158	6.22	217	8.54	256	10.08	184	7.24
200	8"	1)	206	8.11	267	10.51	288	11.34	205	8.07
250	10"	1)	260	10.2	328	12.91	359	14.13	240	9.45
300	12"	PN 10 PN 16 Cl. 150	312	12.3	375	14.76	413	16.26	273	10.75
		PN 25 JIS 10K JIS 20K	310	12.2	375	14.76	404	15.91	268	10.55
350	14"	PN 6	343	13.5	420	16.54	479	18.86	365	14.37
		PN 10								
		PN 16								
375	15"	PN 16	393	15.5	461	18.2	523	20.6	395	15.6
400	16"	PN 6	393	15.5	470	18.50	542	21.34	395	15.55
		PN 10								
		PN 16								
450	18"	PN 6	439	17.3	525	20.67	583	22.95	417	16.42
		PN 10								
		PN 16								
500	20"	PN 6	493	19.4	575	22.64	650	25.59	460	18.11
		PN 10								
		PN 16								
600	24"	PN 6	593	23.3	676	26.61	766	30.16	522	20.55
		PN 10								
		PN 16								
700	28"	PN 6	697	27.4	–	–	786	30.94	460	18.11
		PN10	693	27.3	–	–	813	32.01	480	18.9
		PN16	687	27.1	–	–	807	31.77	490	19.29
		Cl, D	693	27.3	–	–	832	32.76	494	19.45
750	30"	Cl, D	743	29.3	–	–	883	34.76	523	20.59
800	32"	PN 6	799	31.5	–	–	893	35.16	520	20.47
		PN 10	795	31.3	–	–	920	36.22	540	21.26
		PN 16	789	31.1	–	–	914	35.98	550	21.65
		Cl, D	795	31.3	–	–	940	37.01	561	22.09
900	36"	PN 6	897	35.3	–	–	993	39.09	570	22.44

DN		Pressure rating	A		B		D		H	
[mm]	[inch]		[mm]	[inch]	[mm]	[inch]	[mm]	[inch]	[mm]	[inch]
		PN 10	893	35.2	–	–	1020	40.16	590	23.23
		PN 16	886	34.9	–	–	1014	39.92	595	23.43
		Cl, D	893	35.2	–	–	1048	41.26	615	24.21
1000	40"	PN 6	999	39.3	–	–	1093	43.03	620	24.41
		PN 10	995	39.2	–	–	1127	44.37	650	25.59
		PN 16	988	38.9	–	–	1131	44.53	660	25.98
		Cl, D	995	39.2	–	–	1163	45.79	675	26.57
–	42"	Cl, D	1044	41.1	–	–	1220	48.03	704	27.72
1200	48"	PN 6	1203	47.4	–	–	1310	51.57	733	28.86
		PN 10	1196	47.1	–	–	1344	52.91	760	29.92
		PN 16	1188	46.8	–	–	1345	52.95	775	30.51
		Cl, D	1196	47.1	–	–	1385	54.53	786	30.94

1) In the case of DN 25 to 250, ground disks can be used for all the flange standards/pressure ratings which can be supplied in the standard version

Weight

All values (weight exclusive of packaging material) refer to devices with flanges of the standard pressure rating.
The weight may be lower than indicated depending on the pressure rating and design.
Weight specifications including transmitter as per order code for "Housing", option A "Aluminum, coated".

Different values due to different transmitter versions:
Transmitter version for the hazardous area
(Order code for "Housing", option A "Aluminum, coated"; Ex d): +2 kg (+4.4 lbs)

Weight in SI units

Order code for "Design", option C, D, E, H, I : DN 25 to 400 mm (1 to 16 in)			
Nominal diameter		Reference values EN (DIN), AS, JIS	
[mm]	[in]	Pressure rating	[kg]
25	1	PN 40	10
32	–	PN 40	11
40	1 ½	PN 40	12
50	2	PN 40	13
65	–	PN 16	13
80	3	PN 16	15
100	4	PN 16	18
125	–	PN 16	25
150	6	PN 16	31
200	8	PN 10	52
250	10	PN 10	81
300	12	PN 10	95
350	14	PN 6	106
375	15	PN 6	121
400	16	PN 6	121

Order code for "Design", option F, J: DN 450 to 2 000 mm (18 to 78 in)			
		Reference values	
Nominal diameter		EN (DIN) (PN16)	AS (PN 16)
[mm]	[in]	[kg]	[kg]
450	18	142	138
500	20	182	186
600	24	227	266
700	28	291	369
–	30	–	447
800	32	353	524
900	36	444	704
1000	40	566	785
–	42	–	–
1200	48	843	1229
–	54	–	–
1400	–	1204	–

Order code for "Design", option F, J: DN 450 to 2 000 mm (18 to 78 in)			
Nominal diameter		Reference values	
		EN (DIN) (PN16)	AS (PN 16)
[mm]	[in]	[kg]	[kg]
–	60	–	–
1600	–	1845	–
–	66	–	–
1800	72	2357	–
–	78	2929	–
2000	–	2929	–

Order code for "Design", option F, J: DN 2 200 to 3 000 mm (84 to 120 in)		
Nominal diameter		Reference values
		EN (DIN) (PN6)
[mm]	[in]	[kg]
–	84	–
2200	–	3422
–	90	–
2400	–	4094
–	96	–
–	102	–
2600	–	6433
–	108	–
2800	–	7195
–	114	–
3000	–	8567
–	120	–

Order code for "Design", option G, K: DN 450 to 2 000 mm (18 to 78 in)		
Nominal diameter		Reference values
		EN (DIN) (PN 6)
[mm]	[in]	[kg]
450	18	161
500	20	156
600	24	208
700	28	304
–	30	–
800	32	357
900	36	485
1000	40	589
–	42	–
1200	48	850
–	54	850

Order code for "Design", option G, K: DN 450 to 2 000 mm (18 to 78 in)		
Nominal diameter		Reference values EN (DIN) (PN 6)
[mm]	[in]	[kg]
1400	–	1300
–	60	–
1600	–	1845
–	66	–
1800	72	2357
–	78	2929
2000	–	2929

Weight in US units

Order code for "Design", option C, D, E, H, I: DN 1 to 16 in (25 to 400 mm)		
Nominal diameter		Reference values ASME (Class 150)
[mm]	[in]	[lb]
25	1	11
32	–	–
40	1 ½	15
50	2	20
65	–	–
80	3	31
100	4	42
125	–	–
150	6	73
200	8	115
250	10	198
300	12	284
350	14	379
375	15	–
400	16	448

Order code for "Design", option F, J: DN 18 to 120 in (450 to 3 000 mm)		
Nominal diameter		Reference values ASME (Class 150), AWWA (Class D)
[mm]	[in]	[lb]
450	18	421
500	20	503
600	24	666
700	28	587
–	30	701
800	32	845
900	36	1036

Order code for "Design", option F, J: DN 18 to 120 in (450 to 3 000 mm)		
Nominal diameter		Reference values ASME (Class 150), AWWA (Class D)
[mm]	[in]	[lb]
1000	40	1 294
–	42	1 477
1200	48	1 987
–	54	2 807
1400	–	–
–	60	3 515
1600	–	–
–	66	4 699
1800	72	5 662
–	78	6 864
2000	–	6 864
–	84	8 280
2200	–	–
–	90	10 577
2400	–	–
–	96	15 575
–	102	18 024
2600	–	–
–	108	20 783
2800	–	–
–	114	24 060
3000	–	–
–	120	27 724

Order code for "Design", option G, K: DN 18 to 78 in (450 to 2 000 mm)		
Nominal diameter		Reference values ASME (Class 150), AWWA (Class D)
[mm]	[in]	[lb]
450	18	562
500	20	628
600	24	893
700	28	882
–	30	1 014
800	32	1 213
900	36	1 764
1000	40	1 984
–	42	2 426
1200	48	3 087
–	54	4 851
1400	–	–

Order code for "Design", option G, K: DN 18 to 78 in (450 to 2000 mm)		
Nominal diameter		Reference values ASME (Class 150), AWWA (Class D)
[mm]	[in]	[lb]
–	60	5954
1600	–	–
–	66	8158
1800	72	9040
–	78	10143
2000	–	–

Measuring tube specification in SI units

HR = hard rubber, PUR = polyurethane, PTFE = polytetrafluorethylene

Nominal diameter		Pressure rating				Measuring tube internal diameter		
		EN (DIN)	ASME AWWA	AS 2129 AS 4087	JIS	HR	PUR	PTFE
[mm]	[in]					[mm]	[mm]	[mm]
25	1	PN 40	Class 150	–	20K	–	24	25
32	–	PN 40	–	–	20K	–	32	34
40	1 ½	PN 40	Class 150	–	20K	–	38	40
50	2	PN 40	Class 150	Table E, PN 16	10K	50	50	52
50 [1)]	2	PN 40	Class 150	Table E, PN 16	10K	32	–	–
65	–	PN 16	–	–	10K	66	66	68
65	–	PN 16	–	–	10K	38	–	–
80	3	PN 16	Class 150	Table E, PN 16	10K	79	79	80
80	3	PN 16	Class 150	Table E, PN 16	10K	50	–	–
100	4	PN 16	Class 150	Table E, PN 16	10K	101	104	104
100	4	PN 16	Class 150	Table E, PN 16	10K	66	–	–
125	–	PN 16	–	–	10K	127	130	129
125	–	PN 16	–	–	10K	79	–	–
150	6	PN 16	Class 150	Table E, PN 16	10K	155	158	156
150	6	PN 16	Class 150	Table E, PN 16	10K	102	–	–
200	8	PN 10	Class 150	Table E, PN 16	10K	204	207	202
200	8	PN 16	Class 150	Table E, PN 16	10K	127	–	–
250	10	PN 10	Class 150	Table E, PN 16	10K	258	261	256
250	10	PN 16	Class 150	Table E, PN 16	10K	156	–	–
300	12	PN 10	Class 150	Table E, PN 16	10K	309	312	306
300	12	PN 16	Class 150	Table E, PN 16	10K	204	–	–
350	14	PN 10	Class 150	Table E, PN 16	10K	337	340	–
375	15	–	–	PN 16	10K	389	392	–
400	16	PN 10	Class 150	Table E, PN 16	10K	387	390	–
450	18	PN 10	Class 150	–	10K	436	439	–
500	20	PN 10	Class 150	Table E, PN 16	10K	487	490	–
600	24	PN 10	Class 150	Table E, PN 16	10K	585	588	–
700	28	PN 10	Class D	Table E, PN 16	10K	694	697	–

Nominal diameter		Pressure rating				Measuring tube internal diameter		
		EN (DIN)	ASME AWWA	AS 2129 AS 4087	JIS	HR	PUR	PTFE
[mm]	[in]					[mm]	[mm]	[mm]
750	30	–	Class D	Table E, PN 16	10K	743	746	–
800	32	PN 10	Class D	Table E, PN 16	–	794	797	–
900	36	PN 10	Class D	Table E, PN 16	–	895	898	–
1000	40	PN 6	Class D	Table E, PN 16	–	991	994	–
–	42	–	Class D	–	–	1 043	1 043	–
1200	48	PN 6	Class D	Table E, PN 16	–	1 191	1 197	–
–	54	–	Class D	–	–	1 339	–	–
1400	–	PN 6	–	–	–	1 402	–	–
–	60	–	Class D	–	–	1 492	–	–
1600	–	PN 6	–	–	–	1 600	–	–
–	66	–	Class D	–	–	1 638	–	–
1800	72	PN 6	–	–	–	1 786	–	–
–	78	–	Class D	–	–	1 989	–	–
2000	–	PN 6	–	–	–	1 989	–	–
–	84	–	Class D	–	–	2 099	–	–
2200	–	PN 6	–	–	–	2 194	–	–
–	90	–	Class D	–	–	2 246	–	–
2400	–	PN 6	–	–	–	2 391	–	–
–	96	–	Class D	–		2 382	–	–
–	102	–	Class D	–		2 533	–	–
2600	–	PN 6	–	–		2 580	–	–
–	108	–	Class D	–		2 683	–	–
2800	–	PN 6	–	–		2 780	–	–
–	114	–	Class D	–		2 832	–	–
3000	–	PN 6	–	–		2 976	–	–
–	120	–	Class D	–		2 980	–	–

1) Order code for "Design", option C

Measuring tube specification in US units HR = hard rubber, PUR = polyurethane, PTFE = polytetrafluorethylene

Nominal diameter		Pressure rating	Measuring tube internal diameter		
		ASME AWWA	HR	PUR	PTFE
[mm]	[in]		[in]	[in]	[in]
25	1	Class 150	–	0.93	1.00
40	1 ½	Class 150	–	1.51	1.57
50	2	Class 150	1.98	1.98	2.04
50 [1)]	2	Class 150	1.26	–	–
80	3	Class 150	3.11	3.11	3.15
80	3	Class 150	1.97	–	–

Nominal diameter		Pressure rating	Measuring tube internal diameter		
		ASME AWWA	HR	PUR	PTFE
[mm]	[in]		[in]	[in]	[in]
100	4	Class 150	3.99	4.11	4.09
100	4	Class 150	2.60	–	–
150	6	Class 150	6.11	6.23	6.15
150	6	Class 150	4.02	–	–
200	8	Class 150	8.02	8.14	7.96
200	8	Class 150	5.00	–	–
250	10	Class 150	10.14	10.26	10.09
250	10	Class 150	6.14	–	–
300	12	Class 150	12.15	12.26	12.03
300	12	Class 150	8.03	–	–
350	14	Class 150	13.3	13.4	–
375	15	–	15.3	15.4	–
400	16	Class 150	15.2	15.4	–
450	18	Class 150	17.2	17.3	–
500	20	Class 150	19.2	19.3	–
600	24	Class 150	23.0	23.1	–
700	28	Class D	27.3	27.4	–
750	30	Class D	29.3	29.4	–
800	32	Class D	31.3	31.4	–
900	36	Class D	35.2	35.4	–
1000	40	Class D	39.0	39.1	–
–	42	Class D	41.1	41.1	–
1200	48	Class D	46.9	47.1	–
–	54	Class D	52.7	–	–
–	60	Class D	58.7	–	–
–	66	Class D	64.5	–	–
1800	72	–	70.3	–	–
–	78	Class D	78.3	–	–
–	84	Class D	84.0	–	–
–	90	Class D	89.8	–	–
–	96	Class D	93.8	–	–
–	102	Class D	99.7	–	–
–	108	Class D	105.6	–	–
–	114	Class D	111.5	–	–
–	120	Class D	117.3	–	–

1) Order code for "Design", option C

Materials

Transmitter housing

Order code for "Housing":
Option **A** "Aluminum, coated": aluminum, AlSi10Mg, coated

Window material

Order code for "Housing":
Option **A** "Aluminum, coated": glass

Cable entries/cable glands

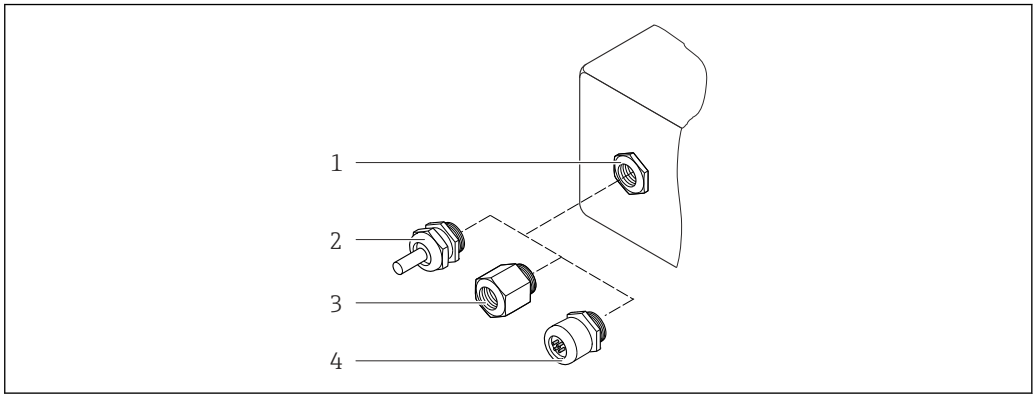

33 *Possible cable entries/cable glands*

1 *Internal thread M20 × 1.5*
2 *Cable gland M20 × 1.5*
3 *Adapter for cable entry with internal thread G ½" or NPT ½"*
4 *Device plug*

Order code for "Housing", option A "Aluminum, coated"

The various cable entries are suitable for hazardous and non-hazardous areas.

Cable entry/cable gland	Material
Coupling M20 × 1.5	Non-Ex: plastic
	Z2, D2, Ex d/de: brass with plastic
Adapter for cable entry with female thread G ½"	Nickel-plated brass
Adapter for cable entry with female thread NPT ½"	

Device plug

Electrical connection	Material
Plug M12x1	▪ Socket: Stainless steel, 1.4404 (316L) ▪ Contact housing: Polyamide ▪ Contacts: Gold-plated brass

Sensor housing

- DN 25 to 300 (1 to 12")
  - Aluminum half-shell housing, aluminum, AlSi10Mg, coated
  - Fully welded carbon steel housing with protective varnish
- DN 350 to 3000900 (14 to 12036")
  Fully welded carbon steel housing with protective varnish

Measuring tubes

- DN 25 to 600 (1 to 24")
  Stainless steel: 1.4301, 1.4306, 304, 304L
- DN 700 to (28 to ")
  Stainless steel: 1.4301, 304, S30408, or equivalent

Liner

- DN 25 to 300 (1 to 12"): PTFE
- DN 25 to 1200 (1 to 48"): polyurethane
- DN 50 to 3000 (2 to 120"): hard rubber

Electrodes

- Stainless steel, 1.4435 (316L)
- Alloy C22, 2.4602 (UNS N06022)
- Tantalum

Process connections

For flanges made of carbon steel:
- DN ≤ 300 (12"): with Al/Zn protective coating or protective varnish
- DN ≥ 350 (14"): protective varnish

All carbon steel lap joint flanges are supplied with a hot-dip galvanized finish.

EN 1092-1 (DIN 2501)

Fixed flange
- Carbon steel:
  - DN ≤ 300: S235JRG2, S235JR+N, P245GH, A105, E250C
  - DN 350 to 3000: P245GH, S235JRG2, A105, E250C
- Stainless steel:
  - DN ≤ 300: 1.4404, 1.4571, F316L
  - DN 350 to 600: 1.4571, F316L, 1.4404
  - DN 700 to 1000: 1.4404, F316L

Lap joint flange
- Carbon steel DN ≤ 300: S235JRG2, A105, E250C
- Stainless steel DN ≤ 300: 1.4306,1.4404, 1.4571, F316L

Lap joint flange, stamped plate
- Carbon steel DN ≤ 300: S235JRG2 similar to S235JR+AR or 1.0038
- Stainless steel DN ≤ 300: 1.4301 similar to 304

ASME B16.5

Fixed flange, lap joint flange
- Carbon steel: A105
- Stainless steel: F316L

JIS B2220

- Carbon steel: A105, A350 LF2
- Stainless steel: F316L

AWWA C207

Carbon steel: A105, P265GH, A181 Class 70, E250C, S275JR

AS 2129

Carbon steel: A105, P235GH, P265GH

AS 4087

Carbon steel: A105, P265GH, S275JR

Seals

As per DIN EN 1514-1, form IBC

Accessories

Protective cover

Stainless steel, 1.4404 (316L)

External WLAN antenna

- Antenna: ASA plastic (acrylonitrile styrene acrylate) and nickel-plated brass
- Adapter: Stainless steel and nickel-plated brass
- Cable: Polyethylene
- Plug: Nickel-plated brass
- Angle bracket: Stainless steel

Ground disks

- Stainless steel, 1.4435 (316L)
- Alloy C22, 2.4602 (UNS N06022)
- Tantalum

Fitted electrodes

Measurement, reference and empty pipe detection electrodes available as standard with:
- 1.4435 (316L)
- Alloy C22, 2.4602 (UNS N06022)
- Tantalum

Process connections

- EN 1092-1 (DIN 2501)
- ASME B16.5
- JIS B2220
- AS 2129 Table E
- AS 4087 PN 16
- AWWA C207 Class D

For information on the different materials used in the process connections → 106

Surface roughness

Electrodes with 1.4435 (316L); Alloy C22, 2.4602 (UNS N06022); tantalum: < 0.5 µm (19.7 µin)

(All data refer to parts in contact with the medium)

Display and user interface

Operation concept

Operator-oriented menu structure for user-specific tasks
- Commissioning
- Operation
- Diagnosis
- Expert level

Quick and safe commissioning
- Guided menus ("Make-it-run" wizards) for applications
- Menu guidance with brief descriptions of the individual parameter functions
- Access to the device via web server
- WLAN access to the device via mobile handheld terminal, tablet or smart phone

Reliable operation
- Operation in local language
- Uniform operating philosophy applied to device and operating tools
- If replacing electronic modules, transfer the device configuration via the integrated memory (HistoROM backup) which contains the process and measuring device data and the event logbook. No need to reconfigure.

Efficient diagnostics increase measurement reliability
- Troubleshooting measures can be called up via the device and in the operating tools
- Diverse simulation options, logbook for events that occur and optional line recorder functions

Languages

Can be operated in the following languages:
- Via local operation
  English, German, French, Spanish, Italian, Dutch, Portuguese, Polish, Russian, Turkish, Chinese, Japanese, Korean, Vietnamese, Czech, Swedish
- Via web browser
  English, German, French, Spanish, Italian, Dutch, Portuguese, Polish, Russian, Turkish, Chinese, Japanese, Vietnamese, Czech, Swedish
- Via "FieldCare", "DeviceCare" operating tool: English, German, French, Spanish, Italian, Chinese, Japanese

Onsite operation

Via display module

Equipment level:
- Order code for "Display; operation", option F "4-line, illuminated, graphic display; touch control"
- Order code for "Display; operation", option G "4-line, illuminated, graphic display; touch control + WLAN"

Information about WLAN interface → 116

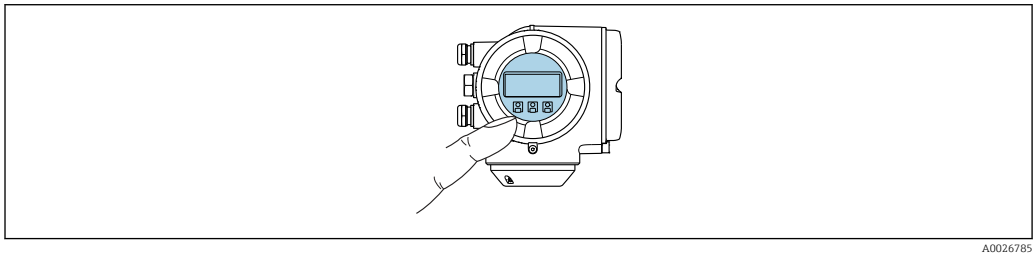

A0026785

34 *Operation with touch control*

Display elements
- 4-line, illuminated, graphic display
- White background lighting; switches to red in event of device errors
- Format for displaying measured variables and status variables can be individually configured

Operating elements
- External operation via touch control (3 optical keys) without opening the housing: ⊞, ⊟, Ⓔ
- Operating elements also accessible in the various zones of the hazardous area

Via remote display and operating module DKX001

The remote display and operating module DKX001 is available as an optional extra → 124..

- The measuring instrument is always supplied with a dummy cover when the remote display and operating module DKX001 is ordered directly with the measuring instrument. Display or operation at the transmitter is not possible in this case.
- If ordered subsequently, the remote display and operating module DKX001 may not be connected at the same time as the existing measuring instrument display module. Only one display or operation unit may be connected to the transmitter at any one time.

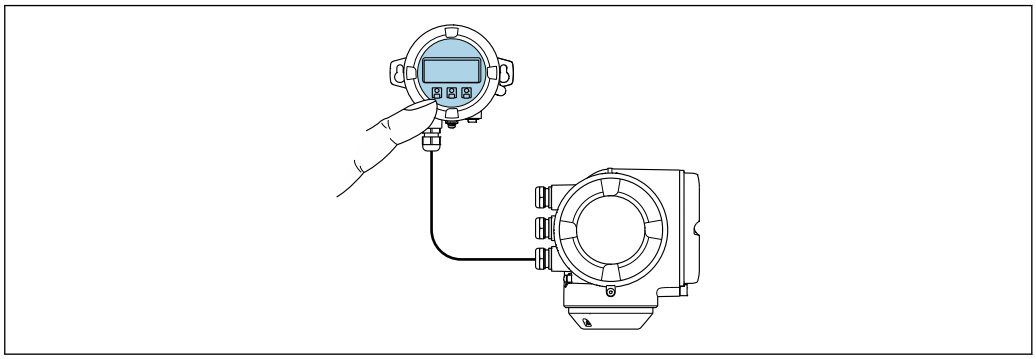

35 *Operation via remote display and operating module DKX001*

Display and operating elements

The display and operating elements correspond to those of the display module → 108.

Housing material

Transmitter housing		Remote display and operating module
Order code for "Housing"	**Material**	**Material**
Option **A** "Aluminum, coated"	AlSi10Mg, coated	AlSi10Mg, coated

Cable entry

Corresponds to the choice of transmitter housing, order code for "Electrical connection".

Connecting cable

→ 54

Dimensions

Remote operation

Via HART protocol

This communication interface is available in device versions with a HART output.

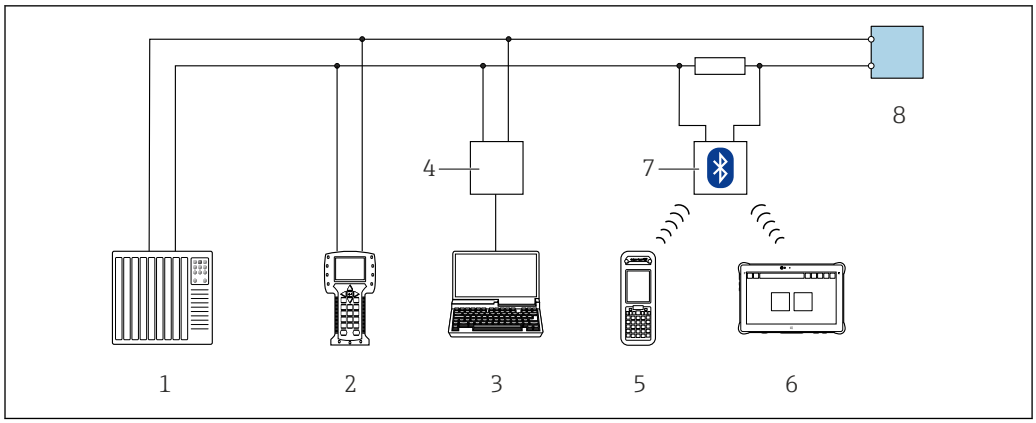

36 *Options for remote operation via HART protocol (active)*

1 *Automation system (e.g. PLC)*
2 *Field Communicator 475*
3 *Computer with web browser for accessing the integrated device web server or computer with operating tool (e.g. FieldCare, DeviceCare, AMS Device Manager, SIMATIC PDM) with COM DTM "CDI Communication TCP/IP"*
4 *Commubox FXA195 (USB)*
5 *Field Xpert SFX350 or SFX370*
6 *Field Xpert SMT70*
7 *VIATOR Bluetooth modem with connection cable*
8 *Transmitter*

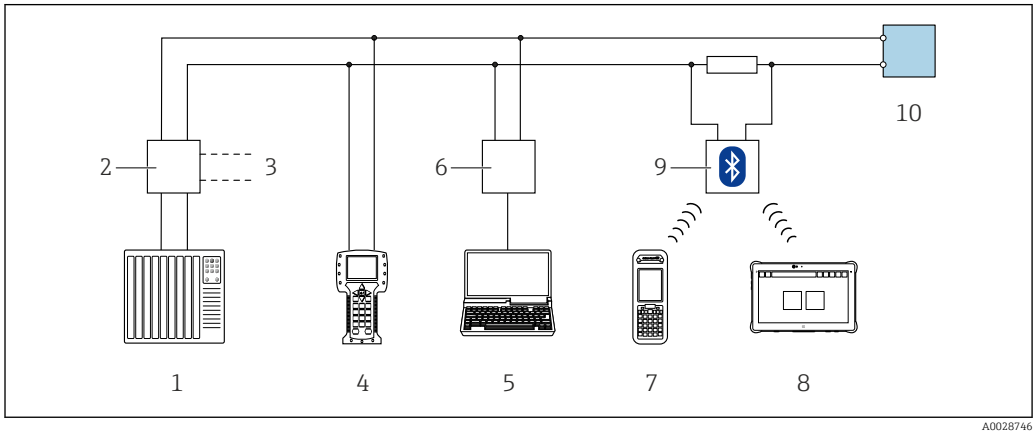

37 *Options for remote operation via HART protocol (passive)*

1 *Automation system (e.g. PLC)*
2 *Transmitter power supply unit, e.g. RN221N (with communication resistor)*
3 *Connection for Commubox FXA195 and Field Communicator 475*
4 *Field Communicator 475*
5 *Computer with web browser (e.g. Microsoft Edge) to access the integrated device web server or computer with operating tool (e.g. FieldCare, DeviceCare, AMS Device Manager, SIMATIC PDM) with COM DTM "CDI Communication TCP/IP"*
6 *Commubox FXA195 (USB)*
7 *Field Xpert SFX350 or SFX370*
8 *Field Xpert SMT70*
9 *VIATOR Bluetooth modem with connection cable*
10 *Transmitter*

Via FOUNDATION Fieldbus network

This communication interface is available in device versions with FOUNDATION Fieldbus.

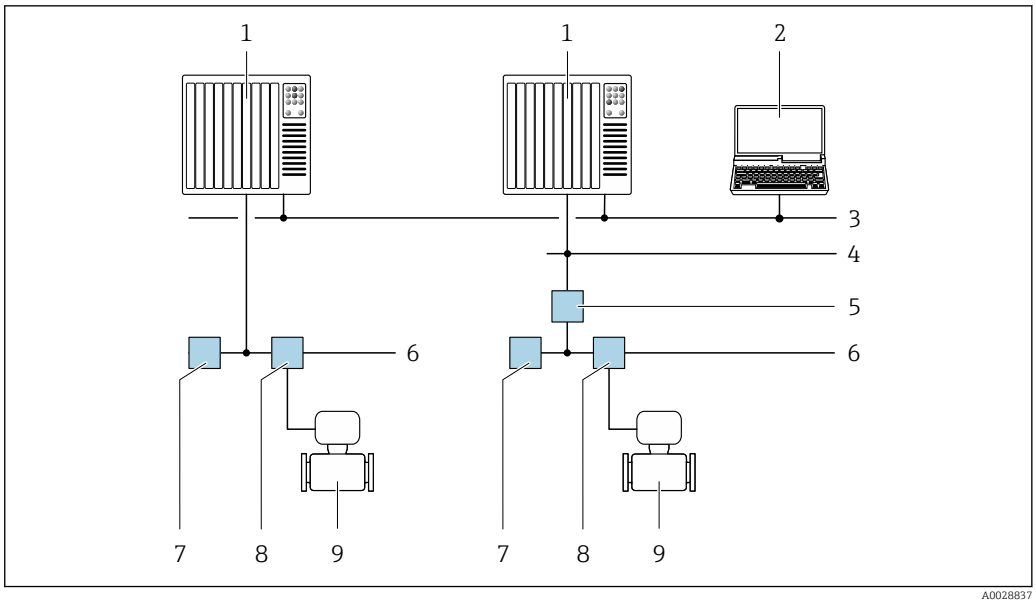

38 *Options for remote operation via FOUNDATION Fieldbus network*

1 *Automation system*
2 *Computer with FOUNDATION Fieldbus network card*
3 *Industry network*
4 *High Speed Ethernet FF-HSE network*
5 *Segment coupler FF-HSE/FF-H1*
6 *FOUNDATION Fieldbus FF-H1 network*
7 *Power supply FF-H1 network*
8 *T-box*
9 *Measuring instrument*

Via PROFIBUS DP network

This communication interface is available in device versions with PROFIBUS DP.

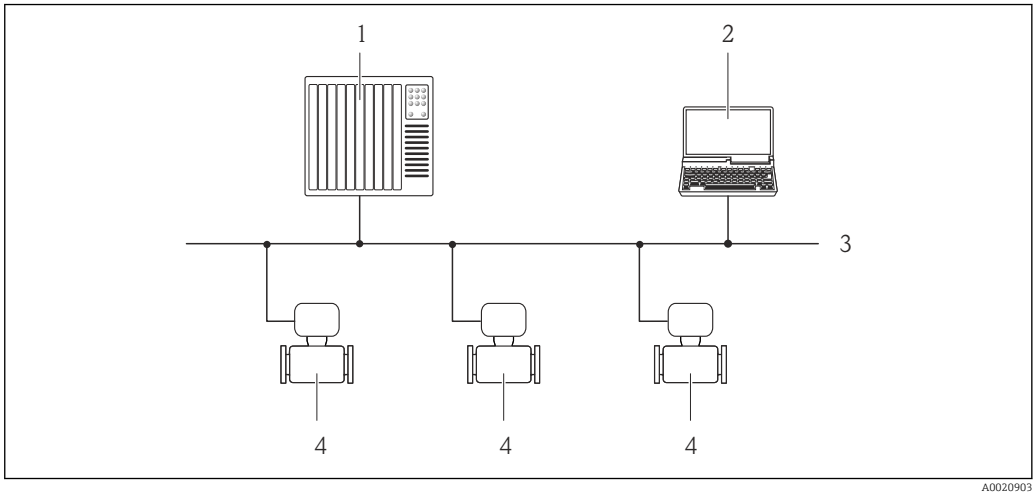

39 *Options for remote operation via PROFIBUS DP network*

1 *Automation system*
2 *Computer with PROFIBUS network card*
3 *PROFIBUS DP network*
4 *Measuring instrument*

Via PROFIBUS PA network

This communication interface is available in device versions with PROFIBUS PA.

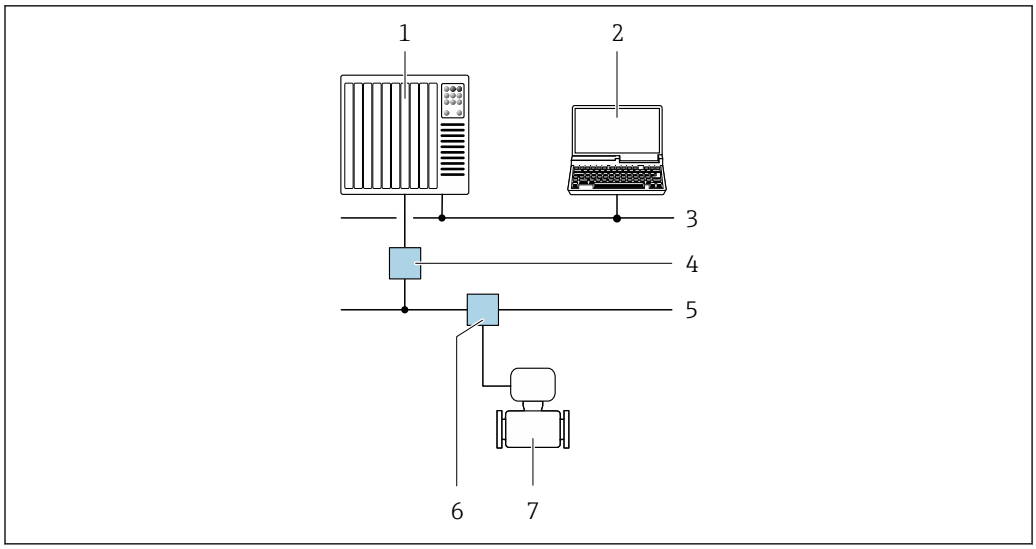

40 Options for remote operation via PROFIBUS PA network

1 Automation system
2 Computer with PROFIBUS network card
3 PROFIBUS DP network
4 Segment coupler PROFIBUS DP/PA
5 PROFIBUS PA network
6 T-box
7 Measuring instrument

Via Modbus RS485 protocol

This communication interface is available in device versions with a Modbus RS485 output.

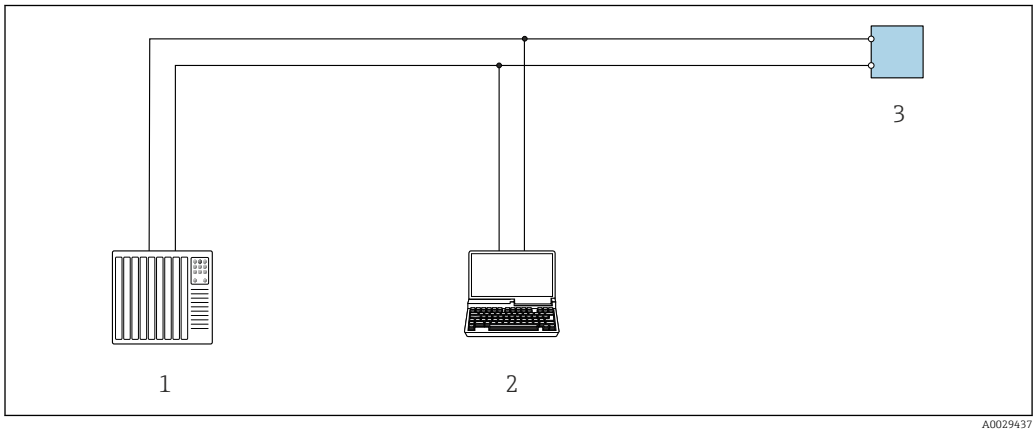

41 Options for remote operation via Modbus RS485 protocol (active)

1 Automation system (e.g. PLC)
2 Computer with web browser for accessing the integrated device web server or with operating tool (e.g. FieldCare, DeviceCare) with COM DTM "CDI Communication TCP/IP" or Modbus DTM
3 Transmitter

Via Modbus TCP over Ethernet-APL 10 Mbit/s, SPE 10 Mbit/s

This communication interface is available on port 1 in device versions with a Modbus TCP over Ethernet-APL output.

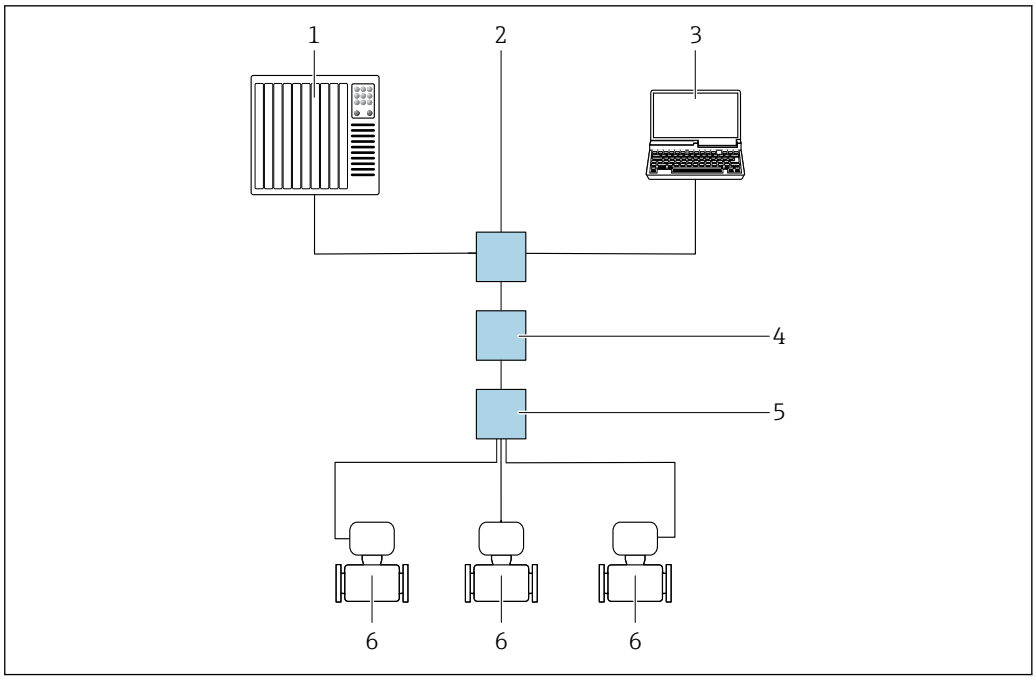

42 *Options for remote operation via Modbus TCP over Ethernet-APL protocol (active)*

1 *Automation system, e.g. Simatic S7 (Siemens)*
2 *Ethernet switch, e.g. Scalance X204 (Siemens)*
3 *Computer with web browser or operating tool*
4 *APL power switch/SPE power switch (optional)*
5 *APL field switch/SPE field switch*
6 *Measuring instrument/communication via port 1 (terminal 26 + 27)*

Via Modbus TCP over Ethernet 100 Mbit/s

This communication interface is available on port 2 in device versions with a Modbus TCP over Ethernet-APL output.

Star topology

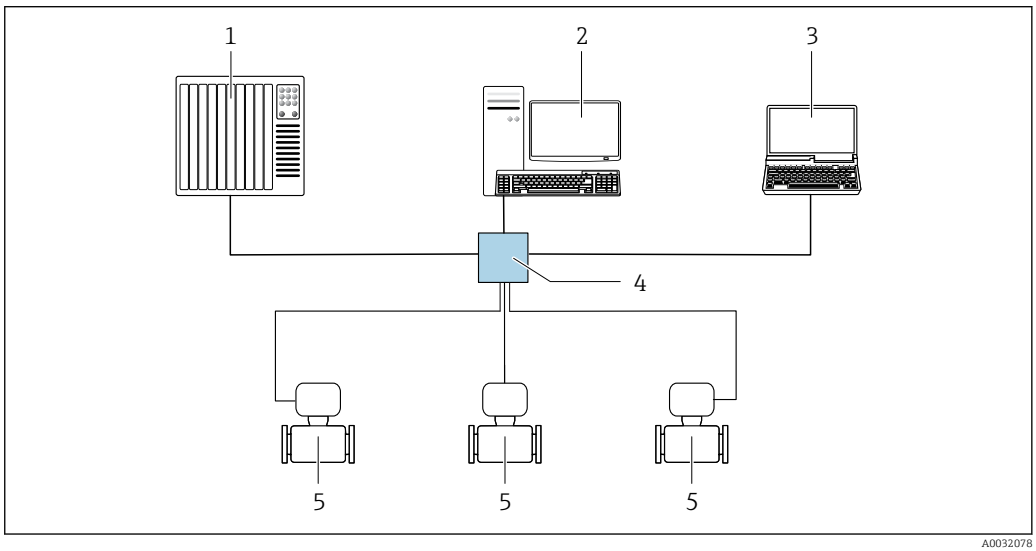

43 *Options for remote operation via Modbus TCP over Ethernet - 100 Mbit/s: Star topology*

1 *Automation system, z. B. RSLogix (Rockwell Automation)*
2 *Workstation for measuring instrument operation: with Custom Add-On Profile for "RSLogix 5000" (Rockwell Automation) or with Electronic Data Sheet (EDS)*
3 *Computer with web browser or operating tool*
4 *Standard Ethernet switch, e.g. Stratix (Rockwell Automation)*
5 *Measuring instrument/communication via port 2 (RJ45 connector)*

Via Ethernet/IP network

This communication interface is available in device versions with Ethernet/IP.

Star topology

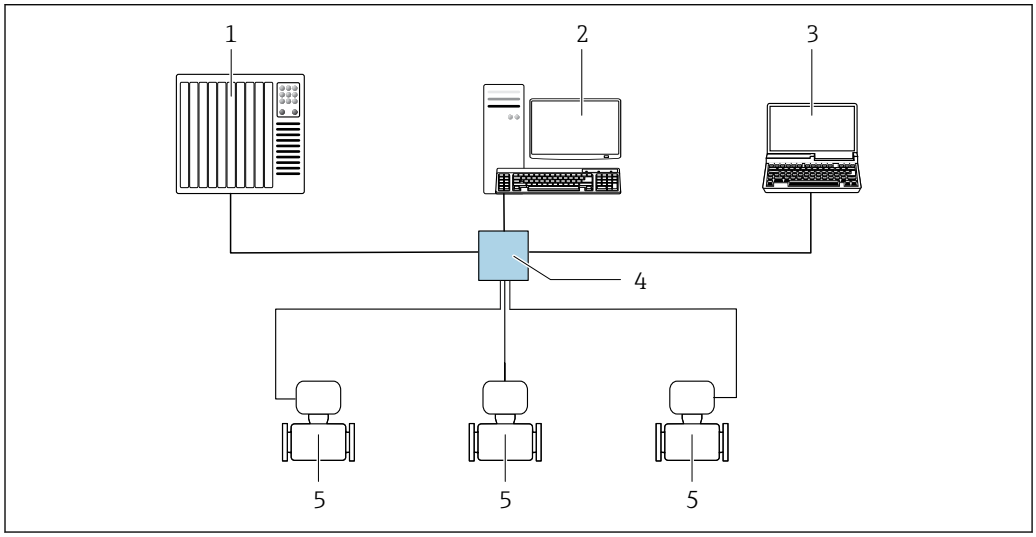

44 *Options for remote operation via Ethernet/IP network: star topology*

1 *Automation system, z. B. "RSLogix" (Rockwell Automation)*
2 *Workstation for measuring instrument operation: with Custom Add-On Profile for "RSLogix 5000" (Rockwell Automation) or with Electronic Data Sheet (EDS)*
3 *Computer with web browser for accessing the integrated web server or computer with operating tool (e.g. FieldCare, DeviceCare) with COM DTM "CDI Communication TCP/IP"*
4 *Standard Ethernet switch, e.g. Scalance X204 (Siemens)*
5 *Measuring instrument*

Ring topology

The device is integrated via the terminal connection for signal transmission (output 1) and the service interface (CDI-RJ45).

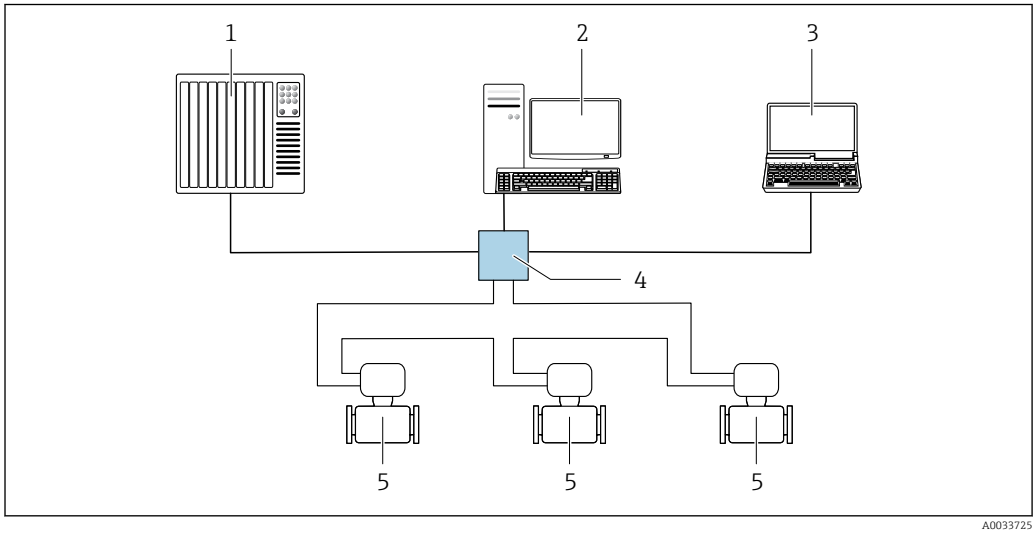

45 *Options for remote operation via Ethernet/IP network: ring topology*

1 *Automation system, z. B. "RSLogix" (Rockwell Automation)*
2 *Workstation for measuring instrument operation: with Custom Add-On Profile for "RSLogix 5000" (Rockwell Automation) or with Electronic Data Sheet (EDS)*
3 *Computer with web browser for accessing the integrated web server or computer with operating tool (e.g. FieldCare, DeviceCare) with COM DTM "CDI Communication TCP/IP"*
4 *Standard Ethernet switch, e.g. Scalance X204 (Siemens)*
5 *Measuring instrument*

Via PROFINET network

This communication interface is available in device versions with PROFINET.

Star topology

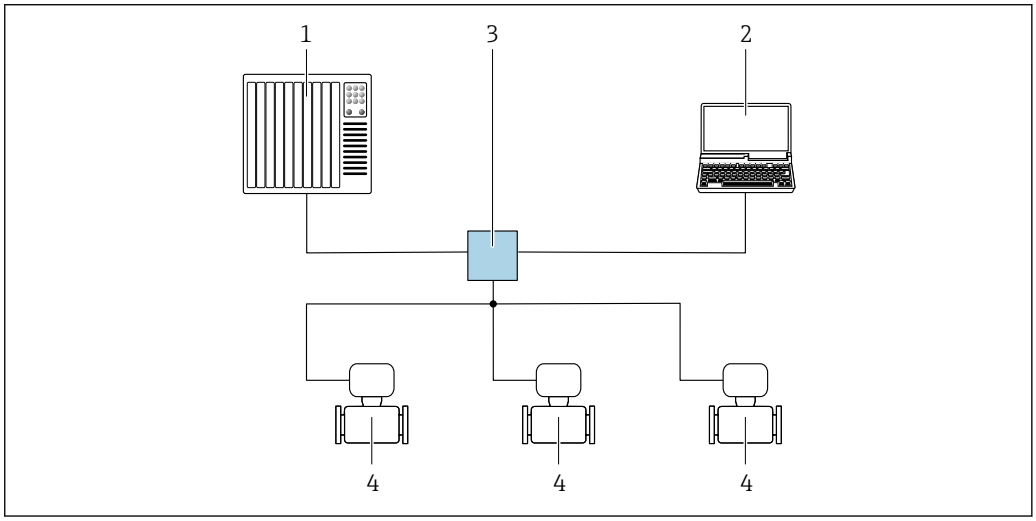

46 *Options for remote operation via PROFINET network: star topology*

1 *Automation system, e.g. Simatic S7 (Siemens)*
2 *Computer with web browser for accessing integrated web server or computer with operating tool (e.g. FieldCare, DeviceCare, SIMATIC PDM) with COM DTM "CDI Communication TCP/IP"*
3 *Standard Ethernet switch, e.g. Scalance X204 (Siemens)*
4 *Measuring instrument*

Ring topology

The device is integrated via the terminal connection for signal transmission (output 1) and the service interface (CDI-RJ45).

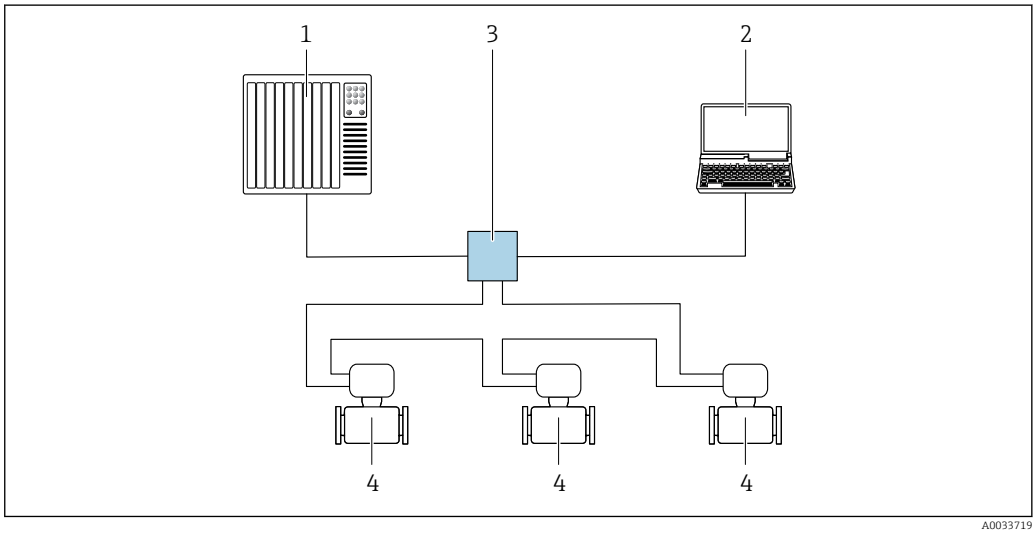

47 *Options for remote operation via PROFINET network: ring topology*

1 *Automation system, e.g. Simatic S7 (Siemens)*
2 *Computer with web browser for accessing integrated web server or computer with operating tool (e.g. FieldCare, DeviceCare, SIMATIC PDM) with COM DTM "CDI Communication TCP/IP"*
3 *Standard Ethernet switch, e.g. Scalance X204 (Siemens)*
4 *Measuring instrument*

Service interface

Via service interface (CDI-RJ45)

To configure the device on site, a point-to-point connection can be established. Alternatively, a connection via Modbus TCP can be used.The connection is made with the housing open, directly via the device's service interface (CDI-RJ45).

An adapter for the RJ45 to the M12 plug is optionally available for the non-hazardous area:

Order code for "Accessories", option **NB**: "Adapter RJ45 M12 (service interface)"

The adapter connects the service interface (CDI-RJ45) to an M12 plug mounted in the cable entry. The connection to the service interface can be established via an M12 plug without opening the device.

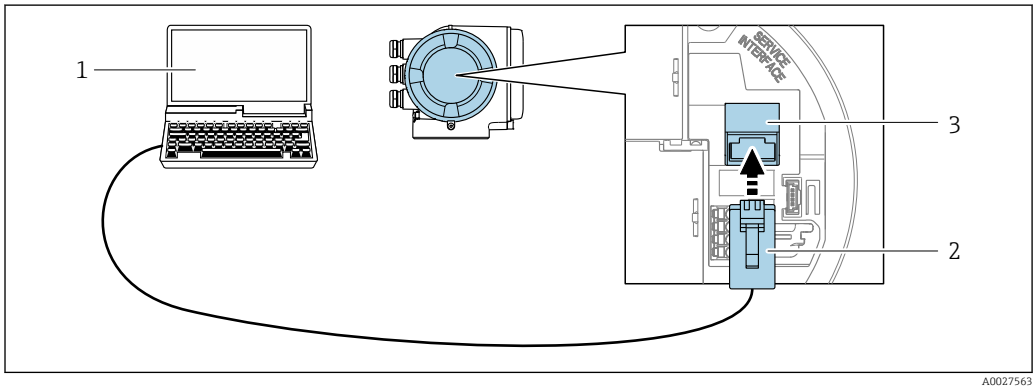

48 Connection via service interface (CDI-RJ45)

1 *Computer with web browser (e.g. Microsoft Edge, port 2) for accessing the integrated web server or with operating tool "FieldCare", "DeviceCare" with COM DTM "CDI Communication TCP/IP" or Modbus DTMor operating tool*
2 *Standard Ethernet connecting cable with RJ45 connector*
3 *Service interface (CDI-RJ45) of the measuring instrument with access to the integrated web server*

Via WLAN interface

The optional WLAN interface is available on the following device version:
Order code for "Display; operation", option G "4-line, illuminated; touch control + WLAN"

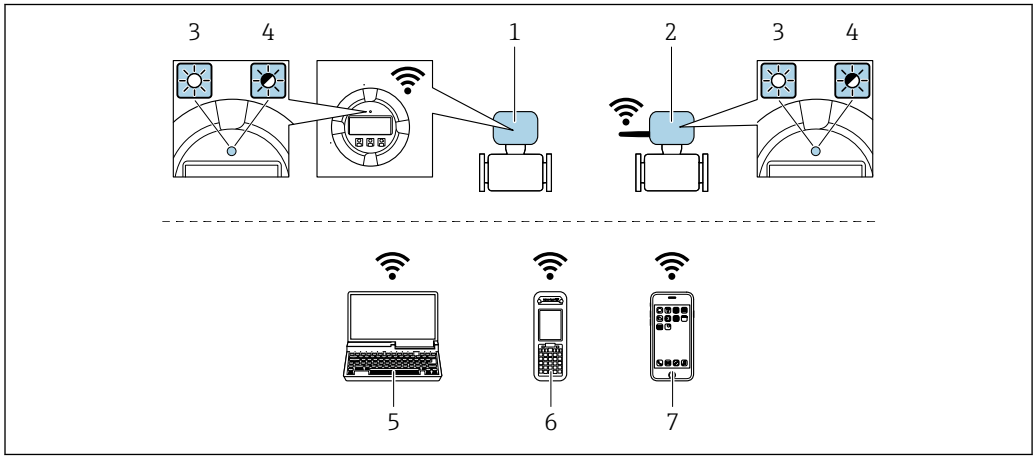

1 *Transmitter with integrated WLAN antenna*
2 *Transmitter with external WLAN antenna*
3 *LED lit constantly: WLAN reception is enabled on measuring instrument*
4 *LED flashing: WLAN connection established between operating unit and measuring instrument*
5 *Computer with WLAN interface and web browser for accessing integrated device web server or with operating tool. e.g FieldCare, DeviceCare)*
6 *Mobiles handheld terminal with WLAN interface and web browser for accessing integrated device web server or operating tool (e.g. FieldCare, DeviceCare)*
7 *Smartphone or tablet (e.g. Field Xpert SMT70)*

Function	WLAN: IEEE 802.11 b/g (2.4 GHz) ▪ Access point with DHCP server (factory setting) ▪ Network
Encryption	WPA2-PSK AES-128 (in accordance with IEEE 802.11i)
Configurable WLAN channels	1 to 11
Degree of protection	IP66/67
Available antennas	▪ Internal antenna ▪ External antenna (optional) In the event of poor transmission/reception conditions at the place of installation. Available as an accessory → 124. Only 1 antenna is active at any one time!
Range	▪ Internal antenna: typically 10 m (32 ft) ▪ External antenna: typically 50 m (164 ft)
Materials (external antenna)	▪ Antenna: ASA plastic (acrylonitrile styrene acrylate) and nickel-plated brass ▪ Adapter: Stainless steel and nickel-plated brass ▪ Cable: Polyethylene ▪ Plug: Nickel-plated brass ▪ Angle bracket: Stainless steel

Network integration

Network integration is only available for the HART communication protocol.

With the optional "OPC-UA Server" application package, the device can be integrated into an Ethernet network via the service interface (CDI-RJ45 and WLAN) and communicate with OPC-UA clients. If the device is used in this way, IT security must be considered.

Transmitters with an Ex de approval may **not** be connected via the service interface (CDI-RJ45)!
Order code for "Approval transmitter + sensor", options (Ex de):
BB, C2, GB, MB, NB

For permanent access to device data and for device configuration via the web server, the device is incorporated directly in a network via the service interface (CDI-RJ45). In this way, the device can be accessed any time from the control station. The measured values are processed separately via the inputs and outputs through the automation system.

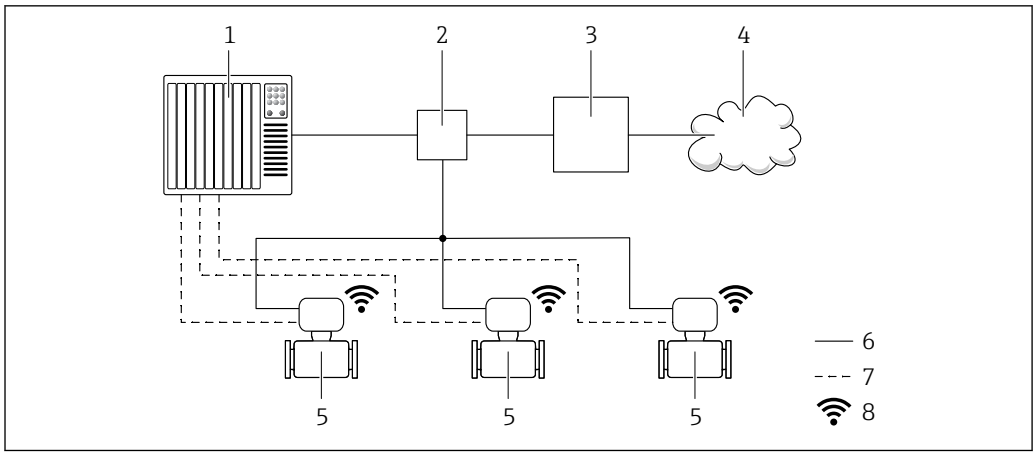

1 *Automation system, e.g. Simatic S7 (Siemens)*
2 *Ethernet switch*
3 *Edge Gateway*
4 *Cloud*
5 *Measuring instrument*
6 *Ethernet network*
7 *Measured values via inputs and outputs*
8 *Optional WLAN interface*

The optional WLAN interface is available on the following device version:
Order code for "Display; operation", option **G** "4-line, backlit, graphic display; touch control + WLAN"

Special Documentation for the OPC-UA Server application package → 129.

Supported operating tools

Different operating tools can be used for local or remote access to the measuring device. Depending on the operating tool used, access is possible with different operating units and via a variety of interfaces.

Supported operating tools	Operating unit	Interface	Additional information
Web browser	Notebook, PC or tablet with web browser	▪ Service interface CDI-RJ45 ▪ WLAN interface ▪ Ethernet-based fieldbus (Ethernet/IP, PROFINET, Modbus TCP over Ethernet-APL)	Special Documentation for device
DeviceCare SFE100	Notebook, PC or tablet with Microsoft Windows system	▪ Service interface CDI-RJ45 ▪ WLAN interface ▪ Fieldbus protocol ▪ Modbus TCP over Ethernet-APL	→ 126

Supported operating tools	Operating unit	Interface	Additional information
FieldCare SFE500	Notebook, PC or tablet with Microsoft Windows system	▪ Service interface CDI-RJ45 ▪ WLAN interface ▪ Fieldbus protocol	→ 🖹 126
Field Xpert	SMT70/77/50	▪ All fieldbus protocols ▪ WLAN interface ▪ Bluetooth ▪ Service interface CDI-RJ45	Operating Instructions BA01202S Device description files: Use update function of handheld terminal

Other operating tools based on FDT technology with a device driver such as DTM/iDTM or DD/EDD can be used for device operation. These operating tools are available from the individual manufacturers. Integration into the following operating tools, among others, is supported:

- FactoryTalk AssetCentre (FTAC) from Rockwell Automation → www.rockwellautomation.com
- Process Device Manager (PDM) from Siemens → www.siemens.com
- Asset Management Solutions (AMS) from Emerson → www.emersonprocess.com
- FieldCommunicator 375/475 from Emerson → www.emersonprocess.com
- Emersons TREX → www.emerson.com
- Field Device Manager (FDM) from Honeywell → www.process.honeywell.com
- FieldMate from Yokogawa → www.yokogawa.com
- PACTWare → www.pactware.com

The related device description files are available: www.endress.com → Download Area

Web server

The integrated web server can be used to operate and configure the device via a web browser via Ethernet-APL, via service interface (CDI-RJ45) or via WLAN interface . The structure of the operating menu is the same as for the local display. In addition to the measured values, status information on the device is displayed and can be used to monitor device health. Furthermore the device data can be managed and the network parameters can be configured.

A device that has a WLAN interface (can be ordered as an option) is required for the WLAN connection: order code for "Display; Operation", option G "4-line, illuminated; touch control + WLAN". The device acts as an Access Point and enables communication by computer or a mobile handheld terminal.

Supported functions
Data exchange between the operating unit (such as a notebook, for example,) and measuring instrument:
- Upload the configuration from the measuring instrument (XML format, configuration backup)
- Save the configuration to the measuring instrument (XML format, restore configuration)
- Export event list (.csv file)
- Export parameter settings (.csv file or PDF file, document the measuring point configuration)
- Export the Heartbeat Technology verification report (PDF file, only available with the **Heartbeat Verification** → 🖹 123 application package)
- Flash firmware version for device firmware upgrade, for example
- Download driver for system integration
- Visualize up to 1000 saved measured values (only available with the **Extended HistoROM** application package→ 🖹 123)

HistoROM data management

The measuring instrument features HistoROM data management. HistoROM data management comprises both the storage and import/export of key device and process data, making operation and servicing far more reliable, secure and efficient.

When the device is delivered, the factory settings of the configuration data are stored as a backup in the device memory. This memory can be overwritten with an updated data record, for example after commissioning.

Additional information on the data storage concept

There are different types of data storage units in which device data are stored and used by the device:

	HistoROM backup	T-DAT	S-DAT

Available data	▪ Event logbook, e.g. diagnostic events
	▪ Parameter data record backup
	▪ Device firmware package
	▪ Driver for system integration for exporting via web server, e.g.:
	  ▪ GSD for PROFIBUS DP
	  ▪ GSD for PROFIBUS PA
	  ▪ GSD for PROFINET
	  ▪ EDS for EtherNet/IP
	  ▪ DD for FOUNDATION Fieldbus
		▪ Measured value logging ("Extended HistoROM" order option)
		▪ Current parameter data record (used by firmware at run time)
		▪ Indicator (minimum/maximum values)
		▪ Totalizer value
			▪ Sensor data: e.g. nominal diameter
			▪ Serial number
			▪ Calibration data
			▪ Device configuration (e.g. SW options, fixed I/O or multi I/O)

Storage location	Fixed on the user interface PC board in the connection compartment	Can be plugged into the user interface PC board in the connection compartment	In the sensor plug in the transmitter neck part

Data backup

Automatic
- The most important device data (sensor and transmitter) are automatically saved in the DAT modules
- If the transmitter or measuring device is replaced: once the T-DAT containing the previous device data has been exchanged, the new measuring device is ready for operation again immediately without any errors
- If exchanging the electronics module (e.g. I/O electronics module): Once the electronics module has been replaced, the software of the module is compared against the current device firmware. The module software is upgraded or downgraded where necessary. The electronics module is available for use immediately afterwards and no compatibility problems occur.

Manual

Additional parameter data record (complete parameter settings) in the integrated device memory HistoROM backup for:
- Data backup function
  Backup and subsequent restoration of a device configuration in the device memory HistoROM backup
- Data comparison function
  Comparison of the current device configuration with the device configuration saved in the device memory HistoROM backup

Data transmission

Manual
- Transfer of a device configuration to another device using the export function of the specific operating tool, e.g. with FieldCare, DeviceCare or web server: to duplicate the configuration or to store in an archive (e.g. for backup purposes)
- Transmission of the drivers for system integration via web server, e.g.:
  - GSD for PROFIBUS DP
  - GSD for PROFIBUS PA
  - GSD for PROFINET
  - EDS for Ethernet/IP
  - DD for FOUNDATION fieldbus

Event list

Automatic
- Chronological display of up to 20 event messages in the events list
- If the **Extended HistoROM** application package (order option) is enabled: up to 100 event messages are displayed in the events list along with a time stamp, plain text description and remedial measures
- The events list can be exported and displayed via a variety of interfaces and operating tools e.g. DeviceCare, FieldCare or Web server

Data logging

Manual
If the **Extended HistoROM** application package (order option) is enabled:
- Recording of 1 to 4 channels of up to 1 000 measured values (up to 250 measured values per channel)
- User configurable recording interval
- Export the measured value log via a variety of interfaces and operating tools e.g. FieldCare, DeviceCare or web server

Certificates and approvals

Current certificates and approvals for the product are available at www.endress.com on the relevant product page:

1. Select the product using the filters and search field.
2. Open the product page.
3. Select **Downloads**.

CE mark

The device meets the legal requirements of the applicable EU Directives. These are listed in the corresponding EU Declaration of Conformity along with the standards applied.

Endress+Hauser confirms successful testing of the device by affixing to it the CE mark.

UKCA marking

The device meets the legal requirements of the applicable UK regulations (Statutory Instruments). These are listed in the UKCA Declaration of Conformity along with the designated standards. By selecting the order option for UKCA marking, Endress+Hauser confirms a successful evaluation and testing of the device by affixing the UKCA mark.

Contact address Endress+Hauser UK:
Endress+Hauser Ltd.
Floats Road
Manchester M23 9NF
United Kingdom
www.uk.endress.com

RCM marking

The measuring system meets the EMC requirements of the "Australian Communications and Media Authority (ACMA)".

Ex-approval

The measuring device is certified for use in hazardous areas and the relevant safety instructions are provided in the separate "Safety Instructions" (XA) document. Reference is made to this document on the nameplate.

The separate Ex documentation (XA) containing all the relevant explosion protection data is available from your Endress+Hauser sales center.

Drinking water approval

- ACS
- KTW/W270
- NSF 61
- WRAS BS 6920

HART certification

HART interface

The measuring device is certified and registered by the FieldComm Group. The measuring system meets all the requirements of the following specifications:
- Certified according to HART 7
- The device can also be operated with certified devices of other manufacturers (interoperability)

FOUNDATION Fieldbus certification

FOUNDATION Fieldbus interface

The measuring device is certified and registered by the FieldComm Group. The measuring system meets all the requirements of the following specifications:
- Certified in accordance with FOUNDATION Fieldbus H1
- Interoperability Test Kit (ITK), revision version 6.2.0 (certificate available on request)
- Physical Layer Conformance Test
- The device can also be operated with certified devices of other manufacturers (interoperability)

Certification PROFIBUS

PROFIBUS interface

The measuring device is certified and registered by the PNO (PROFIBUS Nutzerorganisation e.V./ PROFIBUS User Organization). The measuring system meets all the requirements of the following specifications:
- Certified according to PA Profile 3.02
- The device can also be operated with certified devices of other manufacturers (interoperability)

EtherNet/IP certification

The measuring device is certified and registered by the ODVA (Open Device Vendor Association). The measuring system meets all the requirements of the following specifications:
- Certified in accordance with the ODVA Conformance Test
- EtherNet/IP Performance Test
- EtherNet/IP PlugFest compliance
- The device can also be operated with certified devices of other manufacturers (interoperability)

Certification PROFINET

PROFINET interface

The measuring instrument is certified and registered by the PROFIBUS Nutzerorganisation e.V. (PNO). The measuring system meets all the requirements of the following specifications:
- Certified according to:
  - Test specification for PROFINET devices
  - PROFINET Netload Class 2 100 Mbit/s
- The device can also be operated with certified devices of other manufacturers (interoperability).
- The device supports PROFINET S2 system redundancy.

PROFINET over Ethernet-APL certification

PROFINET interface

The measuring instrument is certified and registered by the PROFIBUS Nutzerorganisation e.V. (PNO). The measuring system meets all the requirements of the following specifications:
- Certified according to:
  - Test specification for PROFINET devices
  - PROFINET PA Profile 4.02
  - PROFINET Netload Robustness Class 2 10 Mbit/s
  - APL conformance test
- The device can also be operated with certified devices of other manufacturers (interoperability)
- The device supports PROFINET S2 system redundancy.

Radio approval

The measuring instrument has radio approval.

For detailed information on the radio approval, see the Special Documentation

External standards and guidelines

- EN 60529
  Degrees of protection provided by enclosures (IP code)
- EN 61010-1
  Safety requirements for electrical equipment for measurement, control and laboratory use - general requirements
- GB30439.5
  Safety requirements for industrial automation products - part 5: Flowmeter safety requirements
- EN 61326-1/-2-3
  EMC requirements for electrical equipment for measurement, control and laboratory use
- NAMUR NE 21
  Electromagnetic compatibility (EMC) of industrial process and laboratory control equipment
- NAMUR NE 32
  Data retention in the event of a power failure in field and control instruments with microprocessors

- NAMUR NE 43
  Standardization of the signal level for the breakdown information of digital transmitters with analog output signal.
- NAMUR NE 53
  Software of field devices and signal-processing devices with digital electronics
- NAMUR NE 105
  Specifications for integrating fieldbus devices in engineering tools for field devices
- NAMUR NE 107
  Self-monitoring and diagnostics of field devices
- NAMUR NE 131
  Requirements for field devices for standard applications
- ETSI EN 300 328
  Guidelines for 2.4 GHz radio components.
- EN 301489
  Electromagnetic compatibility and radio spectrum matters (ERM).

Ordering information

Detailed ordering information is available from your nearest sales organization www.addresses.endress.com or in the Product Configurator at www.endress.com:

1. Select the product using the filters and search field.
2. Open the product page.
3. Select **Configuration**.

Product Configurator - the tool for individual product configuration
- Up-to-the-minute configuration data
- Depending on the device: direct input of information specific to the measuring point, such as the measuring range or operating language
- Automatic verification of exclusion criteria
- Automatic creation of the order code and its breakdown in PDF or Excel output format
- Ability to order directly in the Endress+Hauser Online Shop

Application packages

Many different application packages are available to enhance the functionality of the device. Such packages might be needed to address safety aspects or specific application requirements.

The application packages can be ordered with the device or subsequently from Endress+Hauser. Detailed information on the order code in question is available from your local Endress+Hauser sales center or on the product page of the Endress+Hauser website: www.endress.com.

Diagnostic functionality

Order code for "Application package", option EA "Extended HistoROM"

Comprises extended functions concerning the event log and the activation of the measured value memory.

Event log:
Memory volume is extended from 20 message entries (standard version) to up to 100 entries.

Data logging (line recorder):
- Memory capacity for up to 1000 measured values is activated.
- 250 measured values can be output via each of the 4 memory channels. The recording interval can be defined and configured by the user.
- Measured value logs can be accessed via the local display or operating tool e.g. FieldCare, DeviceCare or Web server.

For detailed information, see the Operating Instructions for the device.

Heartbeat Technology

Order code for "Application package", option EB "Heartbeat Verification + Monitoring"

Heartbeat Verification
Meets the requirement for traceable verification in accordance with DIN ISO 9001:2015 Clause 7.6 a) "Control of monitoring and measuring equipment"
- Functional testing in the installed state without interrupting the process.
- Traceable verification results on request, including a report.
- Simple testing process via local operation or other operating interfaces.
- Clear measuring point assessment (pass/fail) with high total test coverage within the framework of manufacturer specifications.
- Extension of calibration intervals according to operator's risk evaluation.

Heartbeat Monitoring
Continuously supplies data, which are characteristic of the measuring principle, to an external condition monitoring system for the purpose of preventive maintenance or process analysis. These data enable the operator to:
- Draw conclusions - using these data and other information - about the impact the process influences (e.g. buildup, magnetic field interferences) have on measuring performance over time.
- Schedule servicing in time.
- Monitor the process or product quality.

Detailed information on Heartbeat Technology:
Special Documentation (Verweisziel existiert nicht, aber @y.link.required='true')

Cleaning

Order code for "Application package", option EC "ECC electrode cleaning "

The electrode cleaning circuit (ECC) function has been developed to have a solution for applications where magnetite (Fe_3O_4) deposits frequently occur (e.g. hot water). Since magnetite is highly conductive this build up leads to measuring errors and ultimately to the loss of signal. The application package is designed to avoid build-up of very conductive matter and thin layers (typical of magnetite).

For detailed information, see the Operating Instructions for the device.

OPC-UA Server

Order code for "Application package", option EL "OPC-UA Server"

The application package provides an integrated OPC-UA server for comprehensive device services for IoT and SCADA applications.

For detailed information, see the Special Documentation for the device.

Accessories

Various accessories, which can be ordered with the device or subsequently from Endress+Hauser, are available for the device. Detailed information on the order code in question is available from your local Endress+Hauser sales center or on the product page of the Endress+Hauser website: www.endress.com.

Device-specific accessories

For the transmitter

Accessories	Description
Proline 300 transmitter	Transmitter for replacement or storage. Use the order code to define the following specifications: ▪ Approvals ▪ Output ▪ Input ▪ Display/operation ▪ Housing ▪ Software Order code: 5X3BXX Installation Instructions EA01199D

Remote display and operating module DKX001	▪ If ordered directly with the measuring instrument: Order code for "Display; operation", option O "Remote display 4-line, illuminated; 10 m (30 ft) cable; touch control" ▪ If ordered separately: ▪ Measuring instrument: order code for "Display; operation", option M "W/o, prepared for remote display" ▪ DKX001: Via the separate product structure DKX001 ▪ If ordered subsequently: DKX001: Via the separate product structure DKX001 **Mounting bracket for DKX001** ▪ If ordered directly: order code for "Accessory enclosed", option RA "Mounting bracket, pipe 1/2'" ▪ If ordered subsequently: order number: 71340960 **Connecting cable (replacement cable)** Via the separate product structure: DKX002 Further information on display and operating module DKX001→ 109. Special Documentation SD01763D
External WLAN antenna	External WLAN antenna with 1.5 m (59.1 in) connecting cable and two angle brackets. Order code for "Accessory enclosed", option P8 "Wireless antenna wide area". ▪ The external WLAN antenna is not suitable for use in hygienic applications. ▪ Further information on the WLAN interface → 116 Order number: 71351317 Installation Instructions EA01238D
Protective cover	Is used to protect the measuring instrument from the effects of the weather: e.g. rainwater, excess heating from direct sunlight. Order number: 71343505 Installation Instructions EA01160D
Ground cable	Set, consisting of two ground cables for potential equalization.

For the sensor

Accessories	Description
Ground disks	Are used to ground the medium in lined measuring tubes to ensure proper measurement. For details, see Installation Instructions EA00070D

Communication-specific accessories

Accessories	Description
Commubox FXA195 HART	For intrinsically safe HART communication with FieldCare via the USB interface. Technical Information TI00404F
HART loop converter HMX50	Is used to evaluate and convert dynamic HART process variables to analog current signals or limit values. ▪ Technical Information TI00429F ▪ Operating Instructions BA00371F
Fieldgate FXA42	Transmission of the measured values of connected 4 to 20 mA analog measuring instruments, as well as digital measuring instruments ▪ Technical Information TI01297S ▪ Operating Instructions BA01778S ▪ Product page: www.endress.com/fxa42

Field Xpert SMT50	The Field Xpert SMT50 tablet PC for device configuration enables mobile plant asset management in non-hazardous areas. It is suitable for commissioning and maintenance staff to manage field instruments with a digital communication interface and to record progress. This tablet PC is designed as an all-in-one solution with a preinstalled driver library and is an easy-to-use, touch-sensitive tool which can be used to manage field instruments throughout their entire life cycle. ▪ Technical Information TI01555S ▪ Operating Instructions BA02053S ▪ Product page: www.endress.com/smt50
Field Xpert SMT70	The Field Xpert SMT70 tablet PC for device configuration enables mobile plant asset management in hazardous and non-hazardous areas. It is suitable for commissioning and maintenance staff to manage field instruments with a digital communication interface and to record progress. This tablet PC is designed as an all-in-one solution with a preinstalled driver library and is an easy-to-use, touch-sensitive tool which can be used to manage field instruments throughout their entire life cycle. ▪ Technical Information TI01342S ▪ Operating Instructions BA01709S ▪ Product page: www.endress.com/smt70
Field Xpert SMT77	The Field Xpert SMT77 tablet PC for device configuration enables mobile plant asset management in areas categorized as Ex Zone 1. ▪ Technical Information TI01418S ▪ Operating Instructions BA01923S ▪ Product page: www.endress.com/smt77

Service-specific accessories

Accessories	Description
Applicator	Software for selecting and sizing Endress+Hauser measuring instruments: ▪ Choice of measuring instruments for industrial requirements ▪ Calculation of all the necessary data for identifying the optimum flowmeter: e.g. nominal diameter, pressure loss, flow velocity and measurement accuracy. ▪ Graphic display of the calculation results ▪ Determination of the partial order code, administration, documentation and access to all project-related data and parameters over the entire life cycle of a project. Applicator is available: Via the Internet: https://portal.endress.com/webapp/applicator
Netilion	IIoT ecosystem: Unlock knowledge With the Netilion IIoT ecosystem,Endress+Hauser allows you to optimize your plant performance, digitize workflows, share knowledge, and enhance collaboration. Drawing upon decades of experience in process automation, Endress+Hauser offers the process industry an IIoT ecosystem designed to effortlessly extract insights from data. These insights can be used to optimize processes, leading to increased plant availability, efficiency, and reliability - ultimately resulting in a more profitable plant. www.netilion.endress.com
FieldCare	FDT-based plant asset management tool from Endress+Hauser. It can configure all intelligent field units in your system and helps you manage them. By using the status information, it is also a simple but effective way of checking their status and condition. Operating Instructions BA00027S and BA00059S
DeviceCare	Tool to connect and configure Endress+Hauser field devices. Innovation brochure IN01047S

System components

Accessories	Description
Memograph M graphic data manager	The Memograph M graphic data manager provides information on all the relevant measured variables. Measured values are recorded correctly, limit values are monitored and measuring points analyzed. The data are stored in the 256 MB internal memory and also on a SD card or USB stick. ▪ Technical Information TI00133R ▪ Operating Instructions BA00247R
iTEMP	The temperature transmitters can be used in all applications and are suitable for the measurement of gases, steam and liquids. They can be used to read in the medium temperature. "Fields of Activity" document FA00006T

Documentation

For an overview of the scope of the associated Technical Documentation, refer to the following:
- *Device Viewer* (www.endress.com/deviceviewer): Enter the serial number from the nameplate
- *Endress+Hauser Operations app*: Enter serial number from nameplate or scan matrix code on nameplate.

Standard documentation

Supplementary information on the semi-standard options is available in the relevant Special Documentation in the TSP database.

Brief operating instructions

Brief Operating Instructions for the sensor

Measuring device	Documentation code
Proline Promag W	KA01266D

Brief operating instructions for transmitter

Measuring instrument	Documentation code				
	HART	FOUNDATION fieldbus	PROFIBUS PA	PROFIBUS DP	Modbus RS485
Proline 300	KA01308D	KA01294D	KA01405D	KA01385D	KA01310D

Brief operating instructions for transmitter

Measuring instrument	Documentation code			
	Ethernet/IP	PROFINET	PROFINET over Ethernet-APL	Modbus TCP
Proline 300	KA01338D	KA01340D	KA01516D	KA01732D

Operating instructions

Measuring instrument	Documentation code				
	HART	FOUNDATION fieldbus	PROFIBUS PA	PROFIBUS DP	Modbus RS485
Promag W 300	BA01918D	BA01938D	BA01928D	BA01940D	BA01939D

Measuring instrument	Documentation code			
	Ethernet/IP	PROFINET	PROFINET over Ethernet-APL	Modbus TCP
Promag W 300	BA01937D	BA01941D	BA02104D	BA02393D

Description of device parameters

Measuring instrument	Documentation code				
	HART	FOUNDATION fieldbus	PROFIBUS PA	PROFIBUS DP	Modbus RS485
Promag 300	GP01051D	GP01098D	GP01052D	GP01135D	GP01053D

Measuring instrument	Documentation code			
	Ethernet/IP	PROFINET	PROFINET over Ethernet-APL	Modbus TCP
Promag 300	GP01113D	GP01112D	GP01172D	GP01238D

Supplementary device-dependent documentation

Safety Instructions

Safety instructions for electrical equipment for hazardous areas.

Contents	Documentation code
ATEX/IECEx Ex d	XA01414D
ATEX/IECEx Ex ec	XA01514D
cCSAus XP	XA01515D
cCSAus Ex d	XA01516D
cCSAus Ex ec	XA01517D
EAC Ex d	XA01656D
EAC Ex ec	XA01657D
JPN Ex d	XA01775D
KCs Ex d	XA03279D
INMETRO Ex d	XA01518D
INMETRO Ex ec	XA01519D
NEPSI Ex d	XA01520D
NEPSI Ex ec	XA01521D
UKEX Ex d	XA02558D
UKEX Ex ec	XA02559D

Remote display and operating module DKX001

Contents	Documentation code
ATEX/IECEx Ex i	XA01494D
ATEX/IECEx Ex ec	XA01498D
cCSAus IS	XA01499D
cCSAus Ex nA	XA01513D
EAC Ex i	XA01664D
EAC Ex ec	XA01665D
INMETRO Ex i	XA01500D

Contents	Documentation code
INMETRO Ex ec	XA01501D
JPN	XA01781D
KCs Ex i	XA03280D
NEPSI Ex i	XA01502D
NEPSI Ex nA	XA01503D
UKCA Ex i	XA01494D
UKCA Ex ec	XA01498D

Functional Safety Manual

Contents	Documentation code
Promag 300	SD01740D

Special Documentation

Contents	Documentation code
Information on the Pressure Equipment Directive	SD01614D
Radio approvals for WLAN interface for A309/A310 display module	SD01793D
Remote display and operating module DKX001	SD01763D
OPC UA server [1)]	SD02043D

1) This Special Documentation is only available for device versions with a HART output.

Contents	Documentation code							
	HART	FOUNDATION Fieldbus	PROFIBUS PA	PROFIBUS DP	Modbus RS485	PROFINET	EtherNet/IP	PROFINET over Ethernet-APL
Heartbeat Technology	SD01640D	SD01742D	SD01744D	SD02206D	SD01743D	SD01986D	SD01980D	SD02729D
Web server	SD01654D	SD01657D	SD01656D	SD02235D	SD01655D	SD01977D	SD01976D	SD02768D

Installation Instructions

Contents	Note
Installation instructions for spare part sets and accessories	Documentation code: specified for each individual accessory → 🖹 124.

Registered trademarks

HART®
Registered trademark of the FieldComm Group, Austin, Texas USA

PROFIBUS®
Registered trademark of the PROFIBUS Nutzerorganisation e.V. (PROFIBUS User Organization), Karlsruhe, Germany

FOUNDATION™ fieldbus
Registration-pending trademark of the FieldComm Group, Austin, Texas, USA

Modbus®
Registered trademark of SCHNEIDER AUTOMATION, INC.

Ethernet/IP™
Trademark of ODVA, Inc.

Ethernet-APL™
Registered trademark of the PROFIBUS Nutzerorganisation e.V. (PROFIBUS User Organization), Karlsruhe, Germany

PROFINET®
Registered trademark of the PROFIBUS Nutzerorganisation e.V. (PROFIBUS User Organization), Karlsruhe, Germany



www.addresses.endress.com

Endress+Hauser
People for Process Automation