DATA SHEET

T 8115 EN

Series V2001 Valves · Clean Tech

Type 3321CT Globe Valve with pneumatic actuator

DIN and ANSI versions

Application

Compact control valve for the process industry

Nominal size	**DN 15 to 80**	**NPS ½ to 3**
Pressure rating	**PN 16 and 40**	**Class 150 and 300**
Temperatures	**-10 to +220 °C**	**14 to 428 °F**



Fig. 1: *Type 3321CT Valve with Type 3379 Pneumatic Actuator and Type 3724 Positioner*

Special features

Type 3321CT Globe Valve with Type 3379 Pneumatic Actuator and Type 3724 Positioner

- Completely made of stainless steel for hygienic, corrosive environments. Especially suitable for auxiliary media in the food and beverage industry as well as the biotechnology sector
- Skid mounting and compact design facilitate installation
- Digital positioner for precise closed-loop control
- Display, auto tuning and error monitoring

Versions

Standard version for temperatures ranging from -10 to +220 °C/14 to 428 °F

– **Type 3321CT Valve** in nominal sizes DN 15 to 80/NPS ½ to 3 · Flanged body made of stainless steel · Pressure rating PN 16 and 40/Class 150 and 300 · Self-adjusting packing · Gaskets and packings that comply with the European Regulation (EC) No. 1935/2004 and the US Regulation FDA 21 CFR Section 177.1550 · With Type 3379 Pneumatic Actuator made of stainless steel · With Type 3724 Positioner (see Data Sheet ▶ T 8395)

Further versions

– **Reduced K_{VS} coefficients:** Best operating range adapted to the operating conditions
– **Soft-seated plug** for bubble-free shut-off
– **Version as on/off valve** with Type 4740 Limit Switch (see Data Sheet ▶ T 8357)

SAMSON AKTIENGESELLSCHAFT
Weismüllerstraße 3 · 60314 Frankfurt am Main, Germany
Phone: +49 69 4009-0 · samson@samsongroup.com · www.samsongroup.com

Edition June 2022

– Version for the **food** and **beverage industry** as well as for the **pharmaceuticals** and **biotechnology** sector
Valve for cleanroom environments: Materials (gaskets, packings, body), manufacture of parts as well as assembly conditions in accordance with the European Regulation (EC) No. 1935/2004 and the US Regulation FDA 21 CFR Section 177.1550

Principle of operation

The medium flows through the valve in the direction indicated by the arrow. A rise in signal pressure causes the force acting on the diaphragm in the actuator to increase. The springs are compressed. Depending on the selected direction of action, the actuator stem retracts or extends. As a result, the position of the plug in the seat changes and determines the flow rate through the valve and the pressure p_2 with it.

Mounting position

The valve can be mounted in any desired position. Generally, SAMSON recommends installing the valve with the actuator upright and on top of the valve.

Fail-safe positions

Depending on how the compression springs are arranged in the pneumatic actuator, the valve has two fail-safe positions that become effective when the supply air fails:

– **Actuator stem extends:**
The valve is closed upon air supply failure.
– **Actuator stem retracts:**
The valve is opened upon air supply failure.

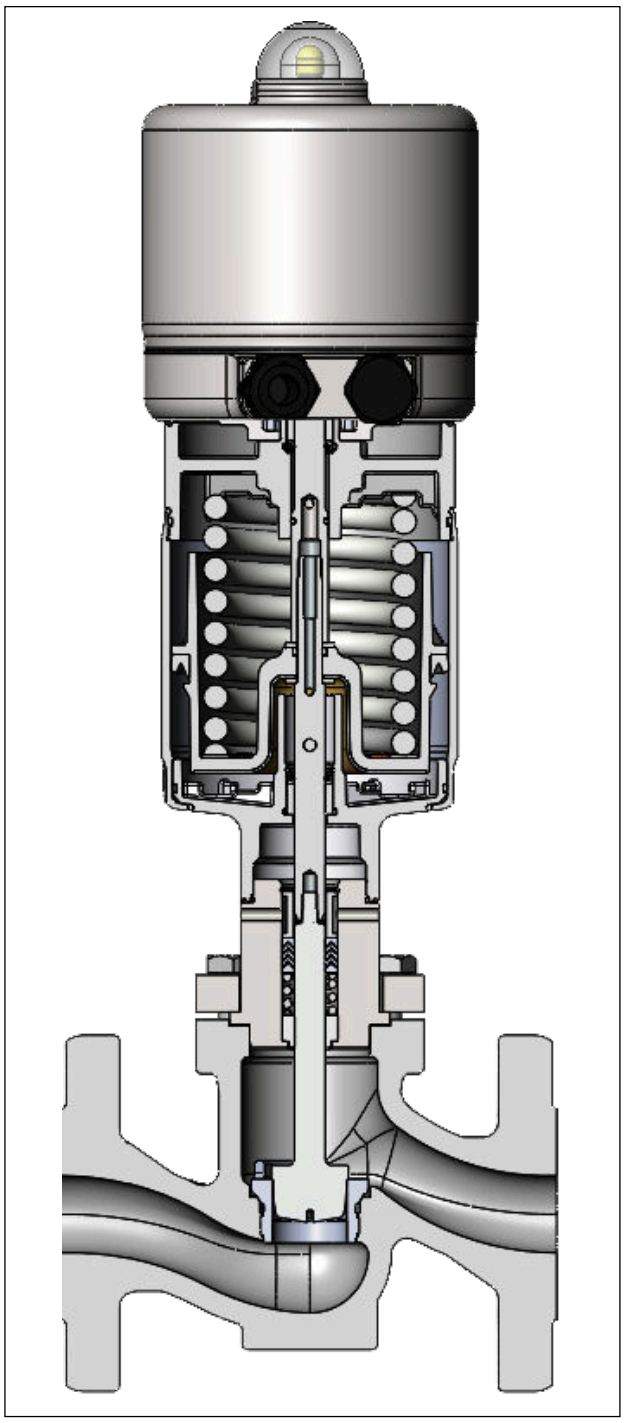

Fig. 2: *Type 3321CT Valve · Fail-close valve*

Table 1: *Technical data for Type 3321CT · DIN and ANSI versions*

Nominal size	**DN 15 to 80 · NPS ½ to 3**
Pressure rating	PN 16 and 40 · Class 150 and 300
Connection	Flanges with raised face form B1 according to DIN EN 1092-1/RF
Seat-plug seal	Metal or soft seal
Characteristic	Equal percentage
Rangeability	50:1
Permissible medium temperature	
Standard version	-10 to +220 °C · 14 to 428 °F
Leakage class according to DIN EN 60534-4 or ANSI FCI 70-2	
Metal seal	IV
Soft seal	VI
Conformity	CE
	FDA compliance Conformity with Regulation (EC) No. 1935/2004

Table 2: *Materials · DIN and ANSI versions*

Type 3321CT Valve	
Valve body	Stainless steel 1.4408 · A351 CF8M
Valve bonnet	Stainless steel 1.4404 or 1.4408 · A182 F316L or A351 CF8M
Seat	Stainless steel 1.4404 · A182 F316L
Plug with plug stem	Stainless steel 1.4404 · A182 F316L
Plug seal	Seal for soft-seated plug: PEEK (certified according to FDA/Regulation (EC) No. 1935/2004)
Guide bushing	Nickel alloy
Packing	V-ring packing: PTFE with carbon; spring: 1.4310
Body gasket	Graphite on metal core
Type 3379 Pneumatic Actuator	
Housing and cover	Stainless steel 1.4409 · A351 CF3M
Actuator stem	Stainless steel 1.4409 · A351 CF3M
Piston	Glass-fiber-reinforced polyamide
	Stainless steel 1.4409 · A351 CF3M[1)]
Bearings	Polymer
Spring	Spring steel
Gasket	NBR
Type 3724 Positioner	
Housing and cover	Stainless steel 1.4409 · A351 CF3M
Transparent cover	Polycarbonate

1) For Ø150 piston

Flow coefficients

Table 3: *K_{VS} and C_V coefficients with associated nominal sizes for Type 3321CT*

	K_{VS}	0.63	1.0	1.6	2.5	4.0	6.3	10	16	25	40	60	80
	C_V	0.73	1.17	1.86	2.91	4.66	7.34	11.65	18.64	29.13	46.6	70	95
Seat bore in mm		6	6	12	12	12	24	24	31	38	48	63	80
Travel in mm		15	15	15	15	15	15	15	15	15	15	15	15
DN	**NPS**												
15	½	•		•		•							
20	¾		•		•		•						
25	1	•		•		•		•					
32	–						•		•				
40	1½							•		•			
50	2								•		•		
65	2½									•		•	
80	3										•		•

Table 4: *Permissible differential pressures · Fail-close*

DN	NPS	K_{VS}	C_V	Actuator area in cm² (Type 3379)	Bench range in bar	Supply pressure in bar	Differential pressure Δp in bar
15, 25	½, 1	0.63	0.75	31	2.3 to 3.7	4	40
20	¾	1	1.2				
15, 25	½, 1	1.6	2	31	2.3 to 3.7	4	40
20	¾	2.5	3				
15, 25	½, 1	4	5				
20, 32	¾,	6.3	7.5	31	2.3 to 3.7	4	11
				63	2.5 to 4.0	4.2	27
25, 40	1, 1½	10	12	31	2.3 to 3.7	4	11
				63	2.5 to 4.0	4.2	27
32, 50	2	16	20	31	2.3 to 3.7	4	6
				63	2.5 to 4.0	4.2	15
					3.3 to 5.6	5.9	21
				176	1.0 to 2.3	2.4	17
					1.4 to 3.0	3.2	26
40, 65	1½, 2½	25	30	63	2.5 to 4.0	4.3	10
					3.3 to 5.6	5.9	14
				176	1.4 to 3.0	3.2	16
					2.1 to 4.6	4.6	27
50, 80	2, 3	40	47	63	2.5 to 4.0	4.3	5
					3.3 to 5.6	5.9	8
				176	1.4 to 3.0	3.2	9
					2.1 to 4.6	4.6	16
65	2½	60	70	176	1.0 to 2.3	2.4	3
					1.4 to 3.0	3.2	5
					2.1 to 4.6	4.6	9
80	3	80	95	176	1.4 to 3.0	3.2	3
					2.1 to 4.6	4.6	5

Table 5: *Permissible differential pressures · Fail-open*

DN	NPS	K_{VS}	C_V	Actuator area in cm² (Type 3379)	Bench range in bar	Differential pressure Δp in bar With required supply pressure in bar		
						4.0	5.0	6.0
15, 25	½, 1	0.63	0.75	31	2.3 to 3.7	–	35	40
20	¾	1	1.2					
15, 25	½, 1	0.63	0.75	63	1.0 to 1.9	40	40	40
20	¾	1	1.2					
15, 25	½, 1	1.6	2	31	2.3 to 3.7	–	18	40
20	¾	2.5	3					
15, 25	½, 1	4	5					
15, 25	½, 1	1.6	2	63	1.0 to 1.9	40	40	40
20	¾	2.5	3					
15, 25	½, 1	4	5					
20, 32	¾,	6.3	7.5	63	1.0 to 1.9	21	34	40
25, 40	1, 1½	10	12					
32, 50	2	16	20	63	1.0 to 1.9	12	20	27
				176	1.0 to 2.3	32	40	40
40, 65	1½, 2½	25	30	63	1.0 to 1.9	7	12	17
				176	1.0 to 2.3	20	35	40
50, 80	2, 3	40	47	63	1.0 to 1.9	4	7	10
				176	1.0 to 2.3	12	21	30
65	2½	60	70	176	1.0 to 2.3	7	12	17
80	3	80	95	176	1.0 to 2.3	4	7	10

Dimensions

Table 6: *Dimensions for Type 3321CT Valve*

Valve		NPS	½	¾	1	–	1½	2	2½	3
		DN	15	20	25	32	40	50	65	80
Height H1		in[1)]	4.02			–	4.49		5.78	
		mm	102			114	114		147	
Height H2		in[1)]	1.73			–	2.83		3.86	
		mm	44			72	72		98	
Length L	PN 16/40	mm	130	150	160	180	200	230	290	310
	Class 150	in[1)]	7.25	7.25	7.25	–	8.75	10	10.88	11.75
	Class 300	in[1)]	7.5	7.62	7.75	–	9.25	10.5	11.5	12.5

[1)] ANSI specifications

Weights

Table 7: *Weights for Type 3321CT Valve*

Valve	DN	15	20	25	32	40	50	65	80
	NPS	½	¾	1	–	1½	2	2½	3
Weight, approx.	kg	5	6	7	11	12	16	28	32
	lbs[1)]	15	18	20	–	35	44	71	82

[1)] ANSI specifications

Table 8: *Type 3379 Pneumatic Actuator*

Actuator		Without positioner			With Type 3724 Positioner		
Actuator area	**cm²**	**31**	**63**	**176**	**31**	**63**	**176**
Piston diameter	**mm**	**63**	**90**	**150**	**63**	**90**	**150**
H	mm	195	195	215	285	285	310
H3[1)]	mm	150	150	150	150	150	150
A1	mm	20	20	20	30	30	30
ØD2	mm	–	–	–	108	108	108
ØD1	mm	69	96	160	69	96	160
Weight, approx.	kg	1.8	3.1	8.9	3.7	4.9	10.7

1) Minimum clearance required to remove the actuator

Dimensional drawings

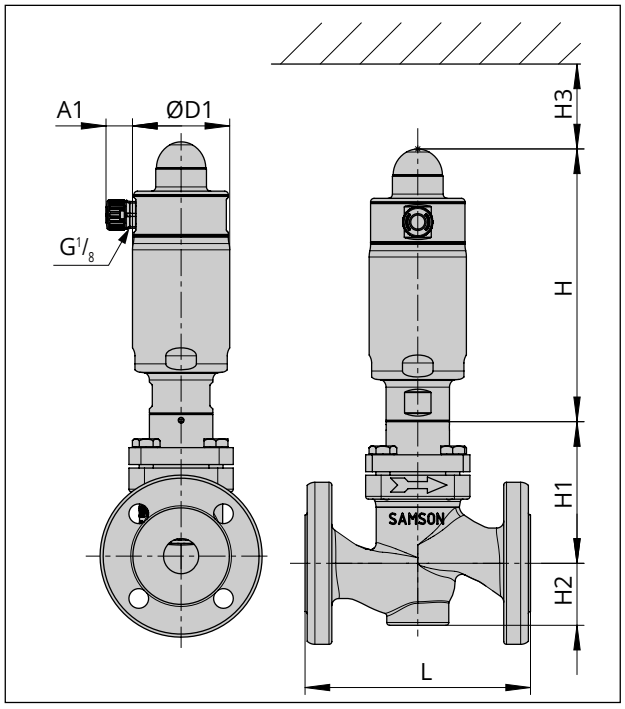

Fig. 3: *Type 3321CT Valve with Type 3379 Pneumatic Actuator*

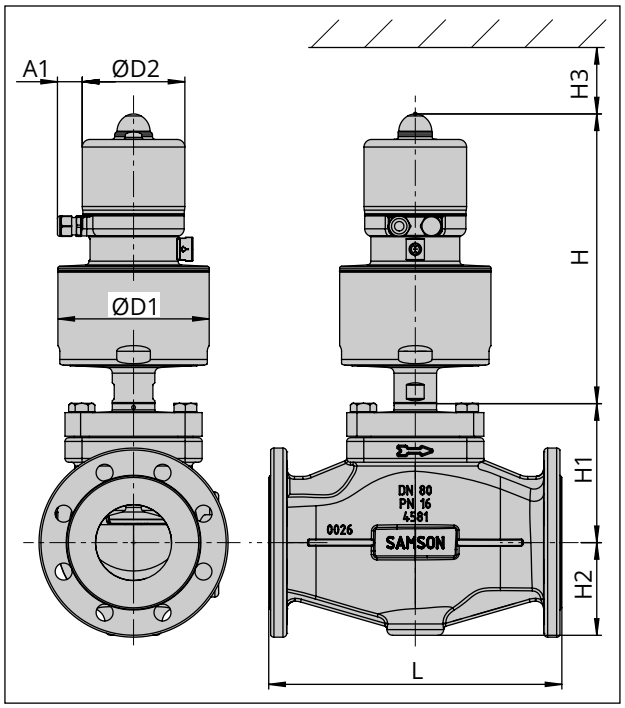

Fig. 4: *Type 3321CT Valve with Type 3379 Pneumatic Actuator and Type 3724 Positioner*

Ordering text

Globe valve	**Type 3321CT**
Nominal size	DN/NPS ...
Pressure rating	PN/Class ...
Body material	See Table 2
Seat-plug seal	Metal or soft seal
Pneumatic actuator	**Type 3379**
Fail-safe action	Fail-close or fail-open
Process medium	Density in lb/cu.ft or kg/m^3 and temperature in °F or °C
Max. flow rate	lbs/h or kg/h or cu.ft/min or m^3/h in standard or operating state
Pressure	p_1 and p_2 in bar or psi (absolute pressure p_{abs}), with minimum, normal and maximum flow rate
Pressure/temperature design	
Valve accessories	Positioner/limit switch