BA01618F/00/EN/02.18
71394719
2018-04-12

01.00.zz (Device firmware)

Operating Instructions
Micropilot FMR60 HART

Free space radar

HART COMMUNICATION PROTOCOL

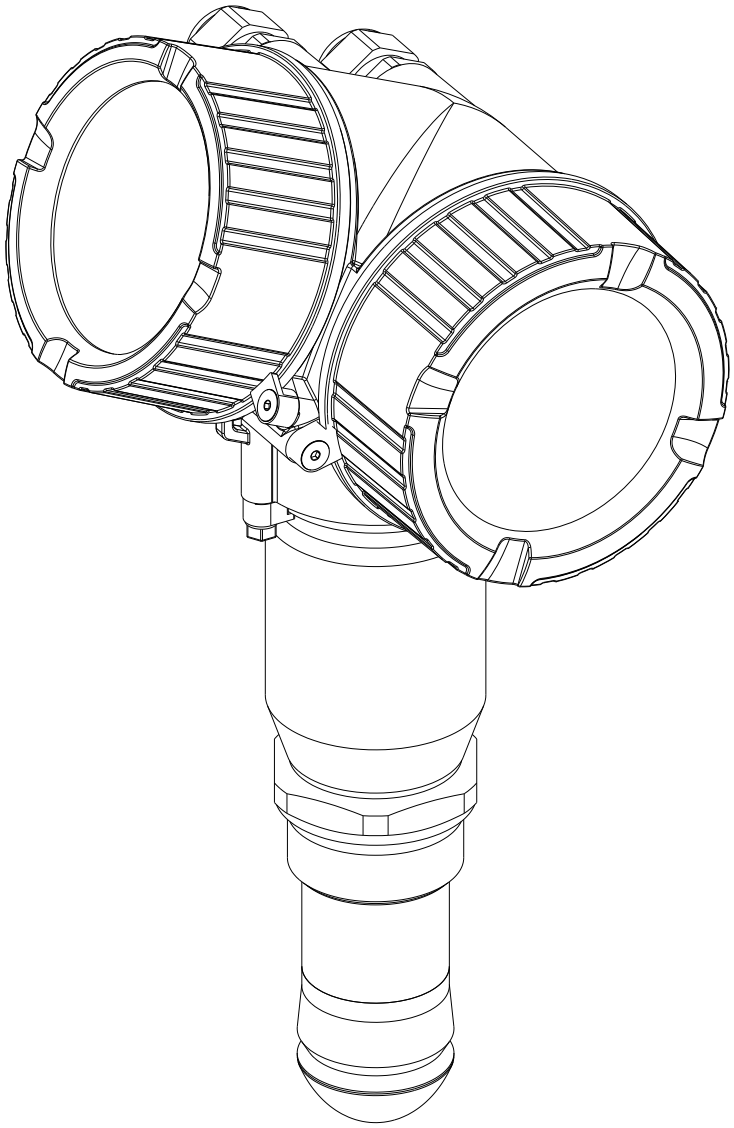

Endress+Hauser
People for Process Automation

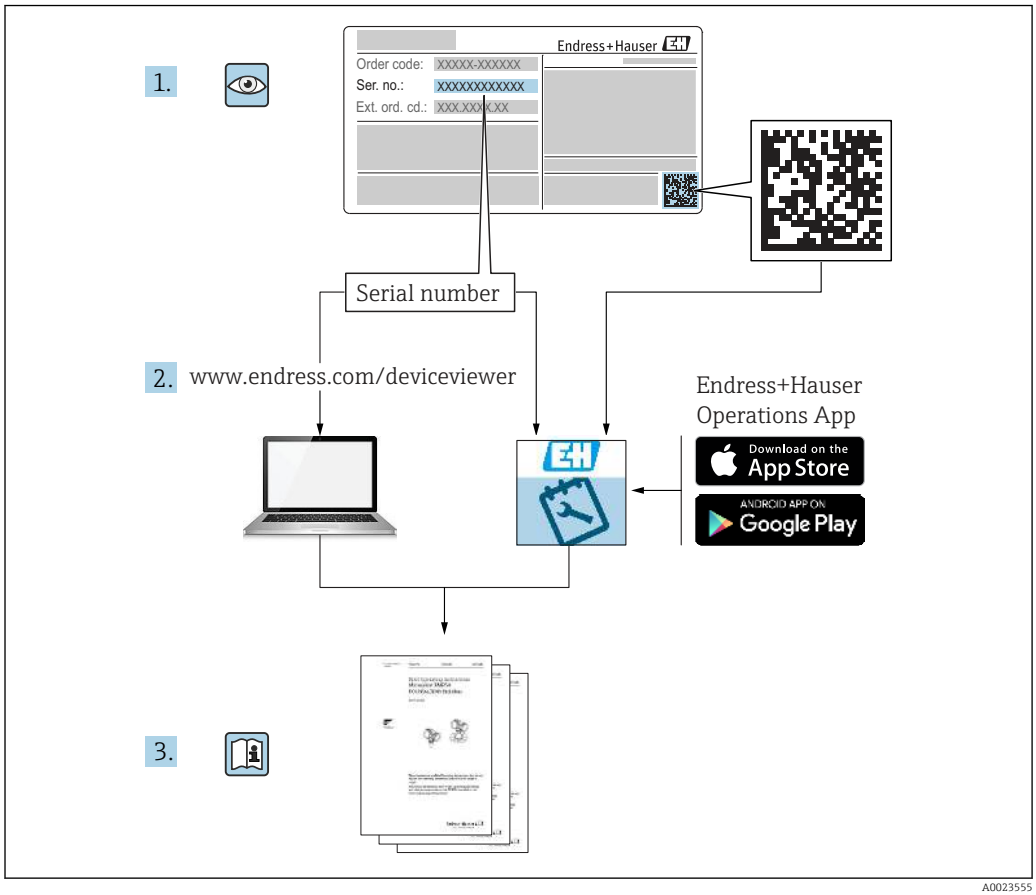
1.
Endress+Hauser
Order code: XXXXX-XXXXXX
Ser. no.: XXXXXXXXXXX
Ext. ord. cd.: XXX XXX XX XX
Serial number
2. www.endress.com/deviceviewer
Endress+Hauser
Operations App
Download on the App Store
ANDROID APP ON Google Play
3.
A0023555

Table of contents

1 Important document information 5
1.1 Document function 5
1.2 Symbols 5
1.2.1 Safety symbols 5
1.2.2 Electrical symbols 5
1.2.3 Tool symbols 5
1.2.4 Symbols for certain types of information 6
1.2.5 Symbols in graphics 6
1.2.6 Symbols at the device 7
1.3 Documentation 7
1.4 Terms and abbreviations 8
1.5 Registered trademarks 9

2 Basic safety instructions 10
2.1 Requirements for the personnel 10
2.2 Designated use 10
2.3 Workplace safety 11
2.4 Operational safety 11
2.5 Product safety 11
2.5.1 CE mark 11
2.5.2 EAC conformity 11
2.6 Safety Instructions (XA) 12

3 Product description 14
3.1 Product design 14
3.1.1 Micropilot FMR60 14
3.1.2 Electronics housing 14

4 Incoming acceptance and product identification 15
4.1 Incoming acceptance 15
4.2 Product identification 15
4.2.1 Nameplate 16

5 Storage, Transport 17
5.1 Storage conditions 17
5.2 Transporting the product to the measuring point 17

6 Installation 18
6.1 Installation conditions 18
6.1.1 Orientation - Liquid media 18
6.1.2 Optimization options 20
6.1.3 Beam angle 20
6.1.4 Measurement through a ball valve . . . 21
6.1.5 External measurement through plastic cover or dielectric windows . . . 22
6.2 Installation: Drip-off antenna, PTFE 50 mm / 2" 22
6.2.1 FMR60 - Aligning the antenna axis . . 22
6.2.2 Radial alignment of the antenna 22
6.2.3 Information concerning nozzles 22
6.2.4 Information concerning threaded connections 23
6.3 Container with heat insulation 23
6.4 Turning the transmitter housing 23
6.5 Turning the display 24
6.5.1 Opening cover 24
6.5.2 Turning the display module 24
6.5.3 Closing electronics compartment cover 25
6.6 Post-installation check 25

7 Electrical connection 26
7.1 Connection conditions 26
7.1.1 Terminal assignment 26
7.1.2 Cable specification 29
7.1.3 Device plug connectors 30
7.1.4 Supply voltage 31
7.1.5 Overvoltage protection 32
7.1.6 Connecting the measuring device 33
7.1.7 Post-connection check 35

8 Operation options 36
8.1 Overview 36
8.1.1 Local operation 36
8.1.2 Operation with remote display and operating module FHX50 37
8.1.3 Operation via Bluetooth® wireless technology 38
8.1.4 Remote operation 39
8.2 Structure and function of the operating menu 40
8.2.1 Structure of the operating menu 40
8.2.2 User roles and related access authorization 42
8.2.3 Data access - Security 42
8.3 Display and operating module 47
8.3.1 Display appearance 47
8.3.2 Operating elements 50
8.3.3 Entering numbers and text 51
8.3.4 Opening the context menu 53
8.3.5 Envelope curve on the display and operating module 54

9 System integration via HART protocol 55
9.1 Overview of the Device Description files (DD) 55
9.2 Measured values via HART protocol 55

10 Commissioning via SmartBlue (app) 56
10.1 Requirements 56
10.2 Commissioning 56

11 Commissioning via wizard 60

12 Commissioning via operating menu 61
12.1 Installation and function check 61
12.2 Setting the operating language 61
12.3 Configuration of a level measurement 62
12.4 Recording the reference curve 64
12.5 Configuration of the on-site display 65
12.5.1 Factory settings of the on-site display 65
12.5.2 Adjustment of the on-site display . . . 65
12.6 Configuration of the current outputs 65
12.6.1 Factory setting of the current outputs 65
12.6.2 Adjustment of the current outputs . . . 65
12.7 Configuration management 66
12.8 Protection of the settings against unauthorized changes 67

13 Diagnostics and troubleshooting . . . 68
13.1 General trouble shooting 68
13.1.1 General errors 68
13.1.2 Error - SmartBlue operation 69
13.1.3 Parametrization errors 69
13.2 Diagnostic information on local display 71
13.2.1 Diagnostic message 71
13.2.2 Calling up remedial measures 73
13.3 Diagnostic event in the operating tool 74
13.4 Diagnostic list 75
13.5 Overview of diagnostic events 76
13.6 Event logbook 77
13.6.1 Event history 77
13.6.2 Filtering the event logbook 78
13.6.3 Overview of information events 78
13.7 Firmware history 79

14 Maintenance 80
14.1 Exterior cleaning 80
14.2 Replacing seals 80

15 Repairs 81
15.1 General information on repairs 81
15.1.1 Repair concept 81
15.1.2 Repairs to Ex-approved devices 81
15.1.3 Replacement of an electronics module 81
15.1.4 Replacement of a device 81
15.2 Spare parts 82
15.3 Return 82
15.4 Disposal 82

16 Accessories 83
16.1 Device-specific accessories 83
16.1.1 Weather protection cover 83
16.1.2 Mounting bracket adjustable 84
16.1.3 Remote display FHX50 85
16.1.4 Overvoltage protection 86
16.1.5 Gas-tight feedthrough 86
16.1.6 Bluetooth module for HART devices . . 87
16.2 Communication-specific accessories 88
16.3 Service-specific accessories 89
16.4 System components 90

17 Operating menu 91
17.1 Ovwerview of the operating menu (SmartBlue) 91
17.2 Overview of the operating menu (display module) 96
17.3 Overview of the operating menu (operating tool) 103
17.4 "Setup" menu 109
17.4.1 "Mapping" wizard 115
17.4.2 "Advanced setup" submenu 117
17.5 "Diagnostics" menu 161
17.5.1 "Diagnostic list" submenu 163
17.5.2 "Event logbook" submenu 164
17.5.3 "Device information" submenu 165
17.5.4 "Measured values" submenu 168
17.5.5 "Data logging" submenu 170
17.5.6 "Simulation" submenu 173
17.5.7 "Device check" submenu 178
17.5.8 "Heartbeat" submenu 179

Index 180

1 Important document information

1.1 Document function

These Operating Instructions contain all the information that is required in various phases of the life cycle of the device: from product identification, incoming acceptance and storage, to mounting, connection, operation and commissioning through to troubleshooting, maintenance and disposal.

1.2 Symbols

1.2.1 Safety symbols

Symbol	Meaning
DANGER	**DANGER!** This symbol alerts you to a dangerous situation. Failure to avoid this situation will result in serious or fatal injury.
WARNING	**WARNING!** This symbol alerts you to a dangerous situation. Failure to avoid this situation can result in serious or fatal injury.
CAUTION	**CAUTION!** This symbol alerts you to a dangerous situation. Failure to avoid this situation can result in minor or medium injury.
NOTICE	**NOTE!** This symbol contains information on procedures and other facts which do not result in personal injury.

1.2.2 Electrical symbols

Symbol	Meaning
⎓	Direct current
~	Alternating current
⎓ ~	Direct current and alternating current
⏚	**Ground connection** A grounded terminal which, as far as the operator is concerned, is grounded via a grounding system.
⏚	**Protective Earth (PE)** A terminal which must be connected to ground prior to establishing any other connections. The ground terminals are situated inside and outside the device: ▪ Inner ground terminal: Connects the protectiv earth to the mains supply. ▪ Outer ground terminal: Connects the device to the plant grounding system.

1.2.3 Tool symbols

Symbol	Meaning
 A0013442	Torx screwdriver
 A0011220	Flat blade screwdriver

Symbol	Meaning
 A0011219	Cross-head screwdriver
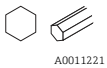 A0011221	Allen key
 A0011222	Hexagon wrench

1.2.4 Symbols for certain types of information

Symbol	Meaning
	**Permitted** Procedures, processes or actions that are permitted.
	**Preferred** Procedures, processes or actions that are preferred.
	**Forbidden** Procedures, processes or actions that are forbidden.
	**Tip** Indicates additional information.
	Reference to documentation.
	Reference to page.
	Reference to graphic.
	Notice or individual step to be observed.
1., 2., 3...	Series of steps.
	Result of a step.
	Help in the event of a problem.
	Visual inspection.

1.2.5 Symbols in graphics

Symbol	Meaning
1, 2, 3 ...	Item numbers
1., 2., 3...	Series of steps
A, B, C, ...	Views
A-A, B-B, C-C, ...	Sections
	**Hazardous area** Indicates a hazardous area.
	**Safe area (non-hazardous area)** Indicates the non-hazardous area.

1.2.6 Symbols at the device

Symbol	Meaning
	**Safety instructions** Observe the safety instructions contained in the associated Operating Instructions.
	**Temperature resistance of the connection cables** Specifies the minimum value of the temperature resistance of the connection cables.

1.3 Documentation

Document	Purpose and content of the document
Technical Information TI01302F	**Planning aid for your device** The document contains all the technical data on the device and provides an overview of the accessories and other products that can be ordered for the device.
Brief Operating Instructions KA01251F	**Guide that takes you quickly to the 1st measured value** The Brief Operating Instructions contain all the essential information from incoming acceptance to initial commissioning.
Description of Device Parameters GP01101F	**Reference for your parameters** The document provides a detailed explanation of each individual parameter in the operating menu. The description is aimed at those who work with the device over the entire life cycle and perform specific configurations.
Special Documentation SD01087F	**Functional Safety Manual** The document is part of the Operating Instructions and serves as a reference for application-specific parameters and notes.
Special Documentation SD01870F	**Manual for Heartbeat Verification and Heartbeat Monitoring** The document contains a description of the additional parameters and technical data that are available with the **Heartbeat Verification** and **Heartbeat Monitoring** application packages.

For an overview of the scope of the associated Technical Documentation, refer to the following:
- The *W@M Device Viewer*: enter the serial number from the nameplate (www.endress.com/deviceviewer)
- The *Endress+Hauser Operations App*: Enter the serial number from the nameplate or scan the 2-D matrix code (QR code) on the nameplate.

1.4 Terms and abbreviations

Term/abbreviation	Explanation
BA	Document type "Operating Instructions"
KA	Document type "Brief Operating Instructions"
TI	Document type "Technical Information"
SD	Document type "Special Documentation"
XA	Document type "Safety Instructions"
PN	Nominal pressure
MWP	Maximum Working Pressure The MWP can also be found on the nameplate.
ToF	Time of Flight
FieldCare	Scalable software tool for device configuration and integrated plant asset management solutions
DeviceCare	Universal configuration software for Endress+Hauser HART, PROFIBUS, FOUNDATION Fieldbus and Ethernet field devices
DTM	Device Type Manager
DD	Device Description for HART communication protocol
ε_r (DC value)	Relative dielectric constant
Operating tool	The term "operating tool" is used in place of the following operating software: ▪ FieldCare / DeviceCare, for operation via HART communication and PC ▪ SmartBlue (app), for operation using an Android or iOS smartphone or tablet.
BD	Blocking Distance; no signals are analyzed within the BD.
PLC	Programmable Logic Controller
CDI	Common Data Interface
PFS	Pulse Frequence Status (Switching output)

1.5 Registered trademarks

HART®
Registered trademark of the HART Communication Foundation, Austin, USA

Bluetooth®
The Bluetooth® word mark and logos are registered trademarks owned by the Bluetooth SIG, Inc. and any use of such marks by Endress+Hauser is under license. Other trademarks and trade names are those of their respective owners.

Apple®
Apple, the Apple logo, iPhone, and iPod touch are trademarks of Apple Inc., registered in the U.S. and other countries. App Store is a service mark of Apple Inc.

Android®
Android, Google Play and the Google Play logo are trademarks of Google Inc.

KALREZ®, VITON®
Registered trademark of DuPont Performance Elastomers L.L.C., Wilmington, USA

TEFLON®
Registered trademark of E.I. DuPont de Nemours & Co., Wilmington, USA

2 Basic safety instructions

2.1 Requirements for the personnel

The personnel for installation, commissioning, diagnostics and maintenance must fulfill the following requirements:
- Trained, qualified specialists must have a relevant qualification for this specific function and task.
- Are authorized by the plant owner/operator.
- Are familiar with federal/national regulations.
- Before starting work, read and understand the instructions in the manual and supplementary documentation as well as the certificates (depending on the application).
- Follow instructions and comply with basic conditions.

The operating personnel must fulfill the following requirements:
- Are instructed and authorized according to the requirements of the task by the facility's owner-operator.
- Follow the instructions in this manual.

2.2 Designated use

Application and media
The measuring device described in these Operating Instructions is intended for continuous, non-contact level measurement in liquids, pastes and sludges. Because of its operating frequency of approx. 80 GHz, a maximum radiated peak power of 6.3 mW and an average power output of 63 µW, unrestricted use outside of closed, metallic vessels is also permitted (for example over basins or open channels). Operation does not pose any danger whatsoever to humans and animals.

If the limit values specified in the "Technical data" and the conditions listed in the instructions and additional documentation are observed, the measuring device may be used for the following measurements only:
- Measured process variables: level, distance, signal strength
- Calculated process variables: volume or mass in vessels of any shape; flow through measuring weirs or channels (calculated from the level by the linearization functionality)

To ensure that the measuring device remains in proper condition for the operation time:
- Use the measuring device only for media against which the process-wetted materials are adequately resistant.
- Observe the limit values in "Technical data".

Incorrect use
The manufacturer is not liable for damage caused by improper or non-designated use.

Verification for borderline cases:
- For special fluids and fluids for cleaning, Endress+Hauser is glad to provide assistance in verifying the corrosion resistance of fluid-wetted materials, but does not accept any warranty or liability.

Residual risks
Due to heat transfer from the process as well as power loss in the electronics, the temperature of the electronics housing and the assemblies it contains (e.g. display module, main electronics module and I/O electronics module) may rise to 80 °C (176 °F). When in operation, the sensor may reach a temperature close to the medium temperature.

Danger of burns from contact with surfaces!
- For elevated fluid temperature, ensure protection against contact to prevent burns.

2.3 Workplace safety

For work on and with the device:
- Wear the required personal protective equipment according to federal/national regulations.

2.4 Operational safety

Risk of injury.
- Operate the device in proper technical condition and fail-safe condition only.
- The operator is responsible for interference-free operation of the device.

Conversions to the device

Unauthorized modifications to the device are not permitted and can lead to unforeseeable dangers.
- If, despite this, modifications are required, consult with the manufacturer.

Repair

To ensure continued operational safety and reliability,
- Carry out repairs on the device only if they are expressly permitted.
- Observe federal/national regulations pertaining to repair of an electrical device.
- Use original spare parts and accessories from the manufacturer only.

Hazardous area

To eliminate a danger for persons or for the facility when the device is used in the hazardous area (e.g. explosion protection, pressure vessel safety):
- Based on the nameplate, check whether the ordered device is permitted for the intended use in the hazardous area.
- Observe the specifications in the separate supplementary documentation that is an integral part of these Instructions.

2.5 Product safety

This measuring device is designed in accordance with good engineering practice to meet state-of-the-art safety requirements, has been tested, and left the factory in a condition in which it is safe to operate. It meets general safety standards and legal requirements.

NOTICE

Loss of degree of protection by opening of the device in humid environments
- If the device is opened in a humid environment, the degree of protection indicated on the nameplate is no longer valid. This may also impair the safe operation of the device.

2.5.1 CE mark

The measuring system meets the legal requirements of the applicable EC guidelines. These are listed in the corresponding EC Declaration of Conformity together with the standards applied.

Endress+Hauser confirms successful testing of the device by affixing to it the CE mark.

2.5.2 EAC conformity

The measuring system meets the legal requirements of the applicable EAC guidelines. These are listed in the corresponding EAC Declaration of Conformity together with the standards applied.

Endress+Hauser confirms successful testing of the device by affixing to it the EAC mark.

2.6 Safety Instructions (XA)

Depending on the approval, the following Safety Instructions (XA) are supplied with the device. They are an integral part of the Operating Instructions.

The nameplate indicates the Safety Instructions (XA) that are relevant to the device.

Feature 010	Approval	Feature 020 "Power Supply; Output"		
		A [1]	B [2]	C [3]
BA	ATEX II 1G Ex ia IIC T6 Ga	XA01549F	XA01549F	XA01549F
BB	ATEX II 1/2G Ex ia IIC T6 Ga/Gb	XA01549F	XA01549F	XA01549F
BC	ATEX II 1/2G Ex ia/db [ia Ga] IIC T6 Ga/Gb	XA01552F	XA01552F	XA01552F
BG	ATEX II 3G Ex ec IIC T6 Gc	XA01551F	XA01551F	XA01551F
BH	ATEX II 3G Ex ic IIC T6 Gc	XA01551F	XA01551F	XA01551F
B2	ATEX II 1/2G Ex ia IIC T6 Ga/Gb, 1/2D Ex ia IIIC T85°C Da/Db	XA01555F	XA01555F	XA01555F
B3	ATEX II 1/2G Ex ia/db [ia Ga] IIC T6, Ga/Gb 1/2D Ex ta/tb IIIC T85°C Da/Db	XA01556F	XA01556F	XA01556F
B4	ATEX II 1/2G Ex ia IIC T6 Ga/Gb, Ex ia/db [ia Ga] IIC T6 Ga/Gb	XA01553F	XA01553F	XA01553F
CB	CSA IS Cl.I Div.1 Gr.A-D	XA01612F	XA01612F	XA01612F
CC	CSA XP Cl.I Div.1 Gr.A-D [Ex ia]	XA01613F	XA01613F	XA01613F
C2	CSA IS Cl.I,II,III Div.1 Gr.A-G, Ex ia, NI Cl.1 Div.2 [Ex ia]	XA01612F	XA01612F	XA01612F
C3	CSA XP Cl.I,II,III Div.1 Gr.A-G, Zn0/1, NI Cl.I Div.2 [Ex ia]	XA01613F	XA01613F	XA01613F
FA	FM IS Cl.I Div.1 Gr.A-D	XA01615F	XA01615F	XA01615F
FB	FM IS Cl.I,II,III Div.1 Gr.A-G, AEx ia, NI Cl.1 Div.2	XA01615F	XA01615F	XA01615F
FC	FM XP-IS Cl.I Div.1 Gr.A-D, AIS Cl.I Div.1 Gr.A-D	XA01616F	XA01616F	XA01616F
FD	FM XP-IS Cl.I Div.1 Gr.A-D, Zn0/1, DIP-IS Cl.II,III Div.1 Gr.E-G, NI Cl.I Div.2	XA01616F	XA01616F	XA01616F
GA	EAC 0Ex ia IIC T6...T3 Ga X	XA01617F	XA01617F	XA01617F
GB	EAC Ga/Gb Ex ia IIC T6...T3 X	XA01617F	XA01617F	XA01617F
GC	EAC Ga/Gb Ex ia/db [ia Ga] IIC T6...T3 X	XA01618F	XA01618F	XA01618F
IA	IEC Ex ia IIC T6 Ga	XA01549F	XA01549F	XA01549F
IB	IEC Ex ia IIC T6 Ga/Gb	XA01549F	XA01549F	XA01549F
IC	IEC Ex ia/db [ia Ga] IIC T6 Ga/Gb	XA01552F	XA01552F	XA01552F
IG	IEC Ex ec IIC T6 Gc	XA01551F	XA01551F	XA01551F
IH	IEC Ex ic IIC T6 Gc	XA01551F	XA01551F	XA01551F
I2	IEC Ex ia IIC T6 Ga/Gb, Ex ia IIIC T85°C Da/Db	XA01555F	XA01555F	XA01555F
I3	IEC Ex ia/db [ia Ga] IIC T6 Ga/Gb, Ex ta/tb IIIC T85°C Da/Db	XA01556F	XA01556F	XA01556F
I4	IEC Ex ia IIC T6 Ga/Gb, Ex ia/db [ia Ga] IIC T6 Ga/Gb	XA01553F	XA01553F	XA01553F
JA	JPN Ex ia IIC T6 Ga	XA01631F [4]	XA01631F [4]	XA01631F [4]
JB	JPN Ex ia IIC T6 Ga/Gb	XA01631F [4]	XA01631F [4]	XA01631F [4]
JC	JPN Ex d [ia] IIC T6 Ga/Gb	XA01632F [4]	XA01632F [4]	XA01632F [4]
JG	JPN Ex nA IIC T6 Gc	XA01725F [4]	XA01725F [4]	XA01725F [4]
JH	JPN Ex ic IIC T6 Gc	XA01725F [4]	XA01725F [4]	XA01725F [4]
J2	JPN Ex ia IIC T6 Ga/Gb, JPN Ex ia IIIC T85°C Da/Db	XA01728F [4]	XA01728F [4]	XA01728F [4]
J3	JPN Ex d [ia] IIC T6 Ga/Gb, JPN Ex ta/tb IIIC T85°C Da/Db	XA01729F [4]	XA01729F [4]	XA01729F [4]
J4	JPN Ex ia IIC T6 Ga/Gb, JPN Ex d [ia] IIC T6 Ga/Gb	XA01726F [4]	XA01726F [4]	XA01726F [4]
KA	KC Ex ia IIC T6 Ga	XA01623F	XA01623F	XA01623F
KB	KC Ex ia IIC T6 Ga/Gb	XA01623F	XA01623F	XA01623F

Feature 010	Approval	Feature 020 "Power Supply; Output"		
		A [1]	B [2]	C [3]
KC	KC Ex ia/db [ia Ga] IIC T6 Ga/Gb	XA01624F	XA01624F	XA01624F
MA	INMETRO Ex ia IIC T6 Ga	XA01620F	XA01620F	XA01620F
MB	INMETRO Ex ia IIC T6 Ga/Gb	XA01620F	XA01620F	XA01620F
MC	INMETRO Ex ia/db [ia Ga] IIC T6 Ga/Gb	XA01622F	XA01622F	XA01622F
MG	INMETRO Ex ec IIC T6 Gc	XA01621F	XA01621F	XA01621F
MH	INMETRO Ex ic IIC T6 Gc	XA01621F	XA01621F	XA01621F
NA	NEPSI Ex ia IIC T6 Ga	XA01625F	XA01625F	XA01625F
NB	NEPSI Ex ia IIC T6 Ga/Gb	XA01625F	XA01625F	XA01625F
NC	NEPSI Ex ia/d [ia Ga] IIC T6 Ga/Gb	XA01627F	XA01627F	XA01627F
NG	NEPSI Ex nA IIC T6 Gc	XA01626F	XA01626F	XA01626F
NH	NEPSI Ex ic IIC T6 Gc	XA01626F	XA01626F	XA01626F
N2	NEPSI Ex ia IIC T6 Ga/Gb, NEPSI Ex iaD 20/21 T85	XA01629F	XA01629F	XA01629F
N3	NEPSI Ex ia/d [ia Ga] IIC T6 Ga/Gb, NEPSI Ex tD A20/A21 IP6X T85°C	XA01630F	XA01630F	XA01630F
8A	FM/CSA IS+XP-IS Cl.I,II,III Div.1 Gr.A-G, AIS Cl.I,II,III Div.1 Gr.A-G	XA01612F XA01615F XA01616F	XA01612F XA01615F XA01616F	XA01612F XA01615F XA01616F
* [4]				

1) 2-wire; 4-20mA HART
2) 2-wire; 4-20mA HART, switch output
3) 2-wire; 4-20mA HART, 4-20mA
4) in preparation

3 Product description

3.1 Product design

3.1.1 Micropilot FMR60

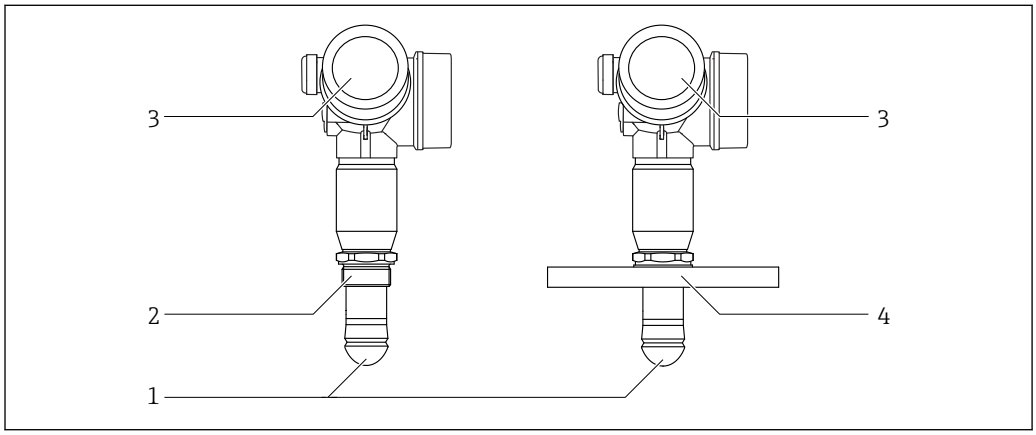

1 Design of the Micropilot FMR60

1 Drip-off antenna PTFE
2 Process connection (Thread)
3 Electronics housing
4 Flange

3.1.2 Electronics housing

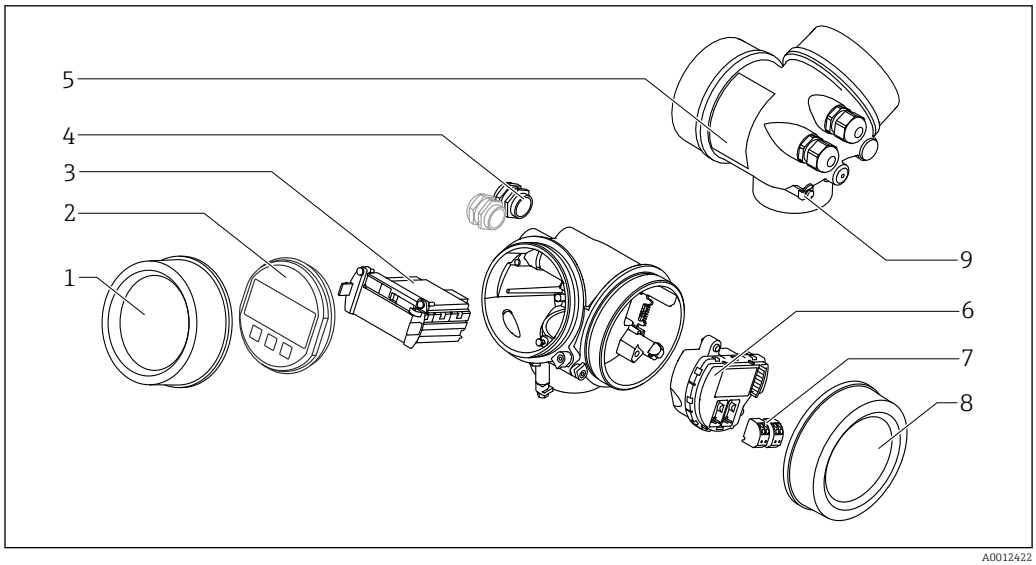

2 Design of the electronics housing

1 Electronics compartment cover
2 Display module
3 Main electronics module
4 Cable glands (1 or 2, depending on instrument version)
5 Nameplate
6 I/O electronics module
7 Terminals (pluggable spring terminals)
8 Connection compartment cover
9 Grounding terminal

4 Incoming acceptance and product identification

4.1 Incoming acceptance

Check the following during incoming acceptance:
- Are the order codes on the delivery note and the product sticker identical?
- Are the goods undamaged?
- Do the nameplate data match the ordering information on the delivery note?
- If required (see nameplate): Are the safety instructions (XA) present?

If one of these conditions does not apply, please contact your Endress+Hauser sales office.

4.2 Product identification

The following options are available for identification of the measuring device:
- Nameplate specifications
- Extended order code with breakdown of the device features on the delivery note
- Enter the serial number on the nameplate into *W@M Device Viewer* (www.endress.com/deviceviewer): all the information about the measuring device is displayed.
- Enter the serial number on the nameplate into the *Endress+Hauser Operations App* or scan the 2-D matrix code (QR code) on the nameplate with the *Endress+Hauser Operations App*: all the information about the measuring device is displayed.

For an overview of the scope of the associated Technical Documentation, refer to the following:
- The *W@M Device Viewer*: enter the serial number from the nameplate (www.endress.com/deviceviewer)
- The *Endress+Hauser Operations App*: Enter the serial number from the nameplate or scan the 2-D matrix code (QR code) on the nameplate.

4.2.1 Nameplate

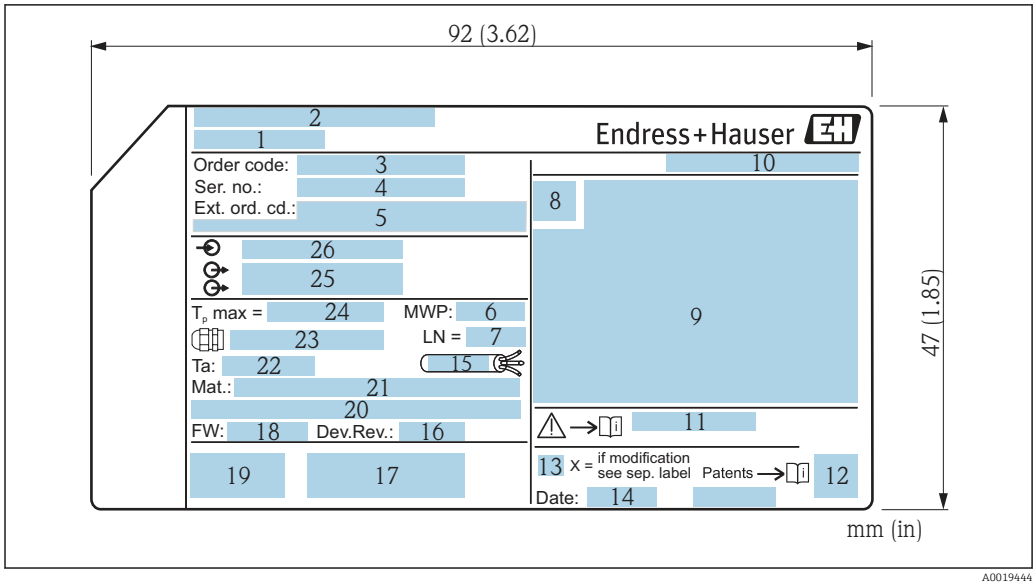

3 *Nameplate of the Micropilot*

1 *Device name*
2 *Manufacturer's address*
3 *Order code*
4 *Serial number (ser. no.)*
5 *Extended order code (Ext. ord. cd.)*
6 *Process pressure*
7 *Antenna length reference length*
8 *Certificate symbol*
9 *Certificate and approval relevant data*
10 *Degree of protection: e.g. IP, NEMA*
11 *Document number of the Safety Instructions: e.g. XA, ZD, ZE*
12 *2-D matrix code (QR code)*
13 *Modification mark*
14 *Manufacturing date: year-month*
15 *Temperature resistance of cable*
16 *Device revision (Dev.Rev.)*
17 *Additional information about the device version (certificates, approvals, communication protocol)*
18 *Firmware version (FW)*
19 *CE mark, C-Tick*
20 *Profibus PA: Profile Version; FOUNDATION Fieldbus: Device ID*
21 *Materials in contact with process*
22 *Permitted ambient temperature (T_a)*
23 *Size of the cable gland thread*
24 *Maximum process temperature*
25 *Signal outputs*
26 *Supply voltage*

Up to 33 characters of the extended order code are indicated on the nameplate. If the extended order code contains additional characters, these cannot be displayed.

However, the complete extended order code can also be displayed via the device operating menu: **Extended order code 1 to 3** parameter

5 Storage, Transport

5.1 Storage conditions

- Permitted storage temperature: −40 to +80 °C (−40 to +176 °F)
- Use original packaging.

5.2 Transporting the product to the measuring point

NOTICE

Housing or sensor may become damaged or pull off.

Risk of injury!

- ▶ Transport the measuring device to the measuring point in its original packaging or by the process connection.
- ▶ Always secure lifting equipment (slings, eyes, etc.) at the process connection and never lift the device by the electronic housing or sensor. Pay attention to the center of gravity of the device so that it does not tilt or slip unintentionally.
- ▶ Follow the safety instructions and transport conditions for devices over 18 kg (39.6 lbs), (IEC61010).

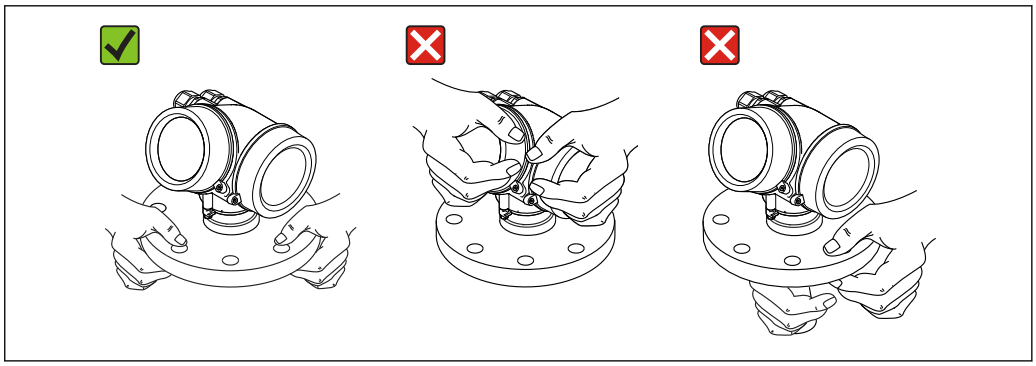

A0032300

6 Installation

6.1 Installation conditions

6.1.1 Orientation - Liquid media

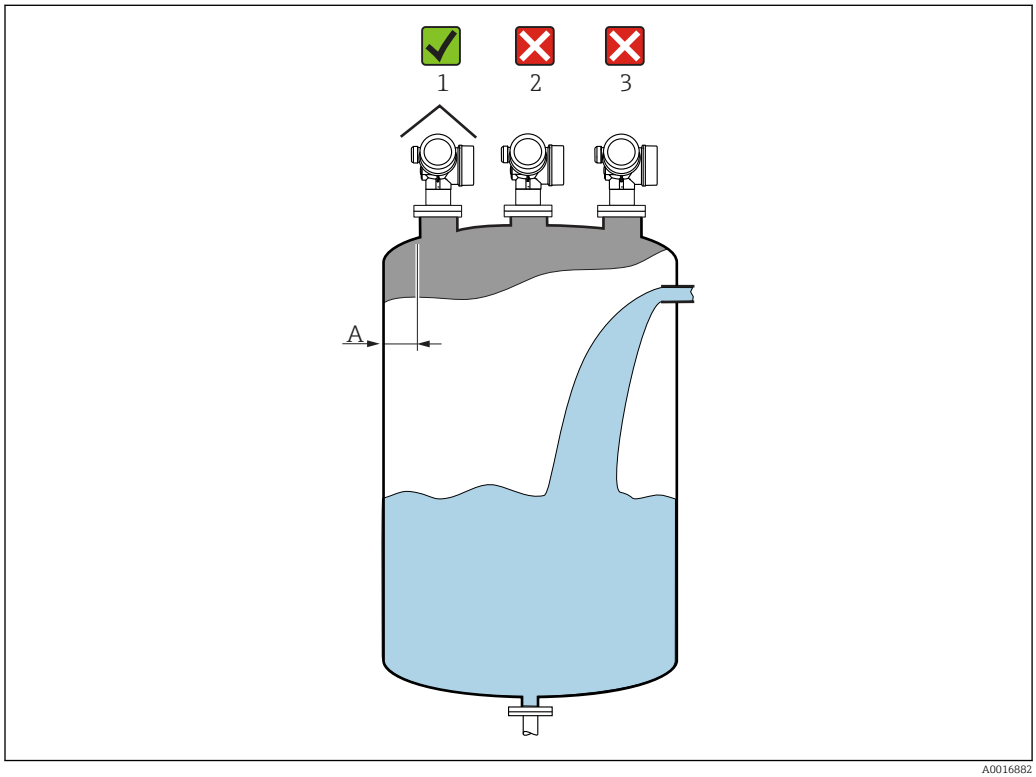

- Recommended distance **A** wall - nozzle outer edge: ~ 1/6 of the container diameter. However, the device must not under any circumstances be mounted closer than 15 cm (5.91 in) to the tank wall.
- Not in the center (2) as interference can cause signal loss.
- Not above the filling curtain (3).
- The use of a weather protection cover (1) is recommended to protect the transmitter from direct sunlight or rain.

Internal container fittings

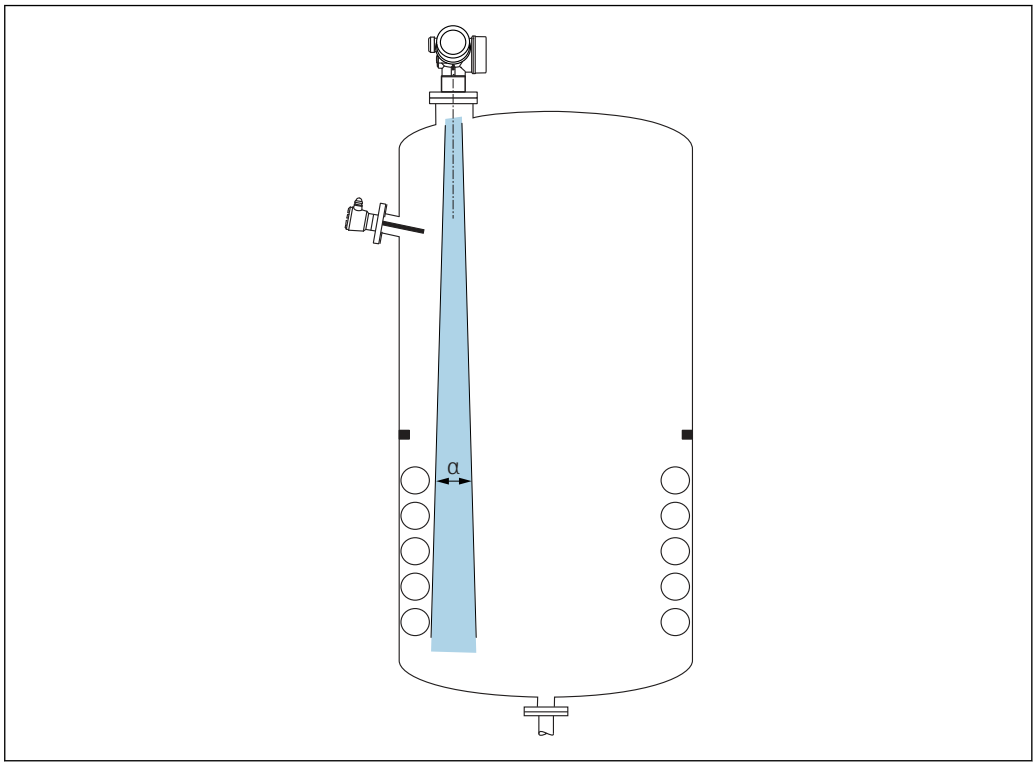

Avoid the location of internal fittings (limit switches, temperature sensors, struts, vacuum rings, heating coils, baffles etc.) inside the signal beam. Take into account the beam angle
→ 🖹 20.

Avoiding interference echoes

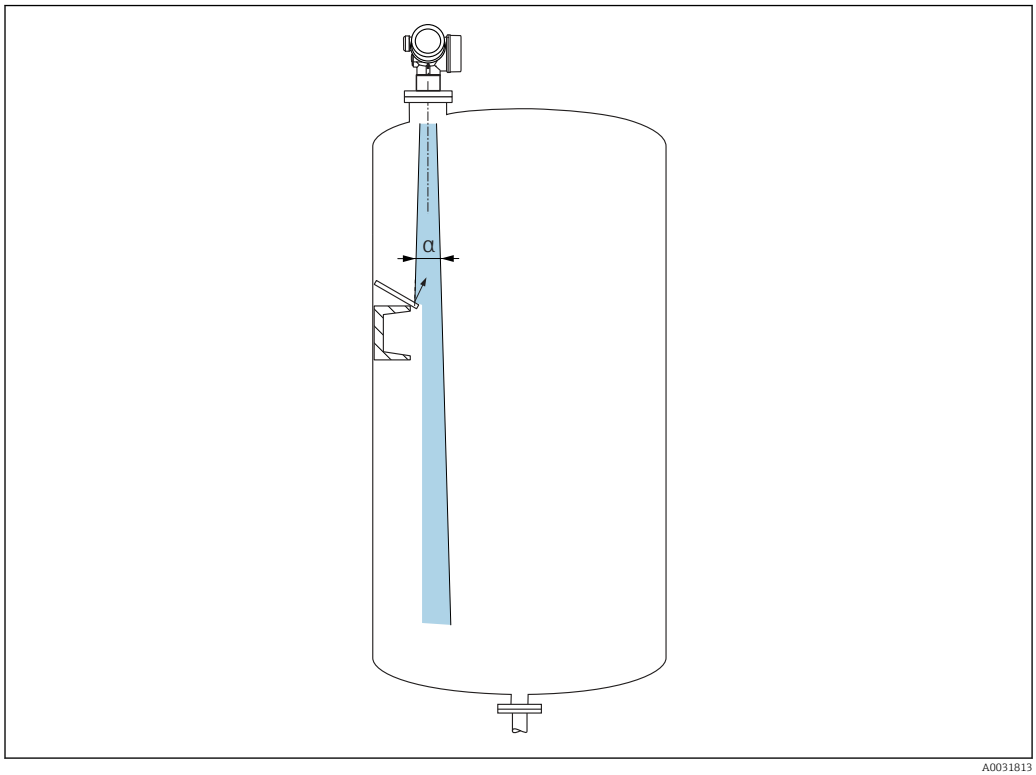

Metal deflector plates, installed at an angle to scatter the radar signals, help prevent interference echoes.

6.1.2 Optimization options

- Antenna size
  The larger the antenna the smaller the beam angle α, resulting in fewer interference echoes → 20.
- Mapping
  Measurement can be optimized by electronically suppressing interference echoes.
  See also **Confirm distance** parameter.

6.1.3 Beam angle

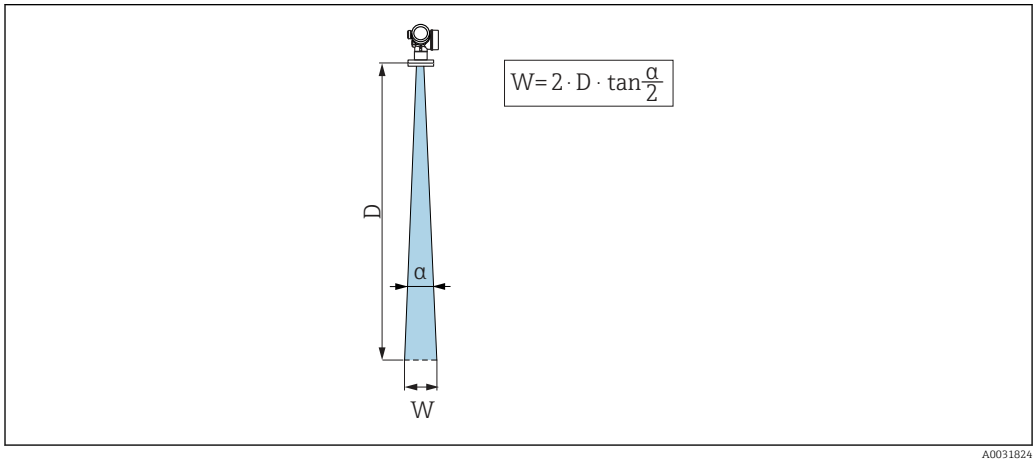

4 *Relationship between beam angle α, distance D and beamwidth diameter W*

The beam angle is defined as the angle α where the energy density of the radar waves reaches half the value of the maximum energy density (3dB width). Microwaves are also emitted outside the signal beam and can be reflected off interfering installations.

FMR60	
	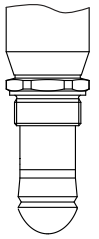 A0032080
Antenna [1]	Drip-off, PTFE 50 mm / 2"
Beam angle α	6 °
Distance (D)	**Beamwidth diameter W**
5 m (16 ft)	0.52 m (1.70 ft)
10 m (33 ft)	1.05 m (3.44 ft)
15 m (49 ft)	1.57 m (5.15 ft)
20 m (66 ft)	2.10 m (6.89 ft)
25 m (82 ft)	2.62 m (8.60 ft)
30 m (98 ft)	3.14 m (10.30 ft)
35 m (115 ft)	3.67 m (12.04 ft)
40 m (131 ft)	4.19 m (13.75 ft)
45 m (148 ft)	4.72 m (15.49 ft)
50 m (164 ft)	5.24 m (17.19 ft)

1) Order code 070 in product structure

6.1.4 Measurement through a ball valve

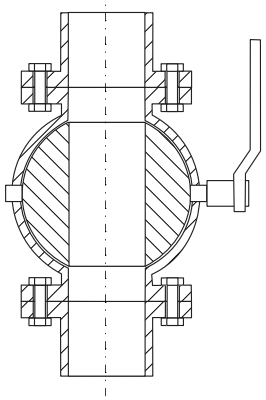

A0034564

- Measurements can be performed through an open full bore ball valve without any problems.
- At the transitions, no gap may be left exceeding 1 mm (0.04 in).
- Diameter of opening of ball valve must always be equivalent to pipe diameter; avoid edges and constrictions.

6.1.5 External measurement through plastic cover or dielectric windows

- Dielectric constant of medium: $\varepsilon_r \geq 10$
- The distance from the tip of the antenna to the tank should be approx. 100 mm (4 in).
- If possible, avoid installation positions in which condensate or buildup can form between the antenna and the vessel.
- In the case of outdoor installations, ensure that the area between the antenna and the tank is protected from the weather.
- Do not install any fittings or attachments between the antenna and the tank that could reflect the signal.

Suitable thickness of tank roof or window

Material	PE	PTFE	PP	Perspex
ε_r (Dielectric constant of medium)	2.3	2.1	2.3	3.1
Optimum thickness	1.25 mm (0.049 in) [1]	1.3 mm (0.051) [1]	1.25 mm (0.049 in) [1]	1.07 mm (0.042 in) [1]

1) or an integer that is a multiple of this value; it should be noted here that the microwave transparency decreases significantly with increasing window thickness.

6.2 Installation: Drip-off antenna, PTFE 50 mm / 2"

6.2.1 FMR60 - Aligning the antenna axis

Align the antenna vertically to the product surface.

Attention:

The maximum reach of the antenna can be reduced if it is not installed perpendicular to the product.

6.2.2 Radial alignment of the antenna

Based on the directional characteristic, radial alignment of the antenna is not necessary.

6.2.3 Information concerning nozzles

The maximum nozzle length H_{max} depends on the nozzle diameter D:

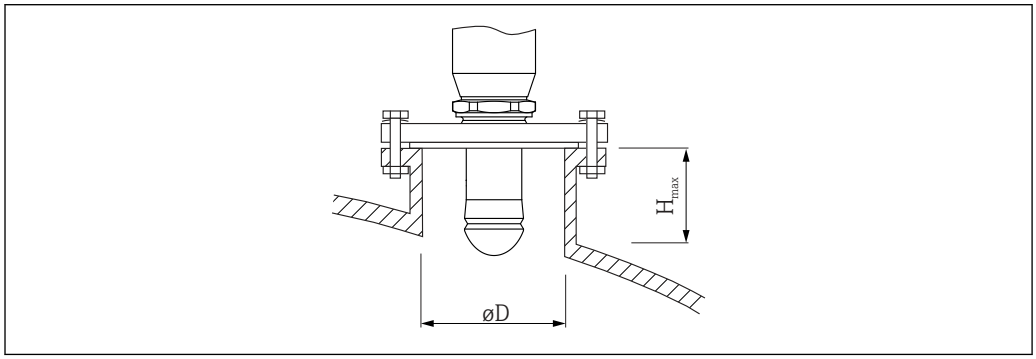

A0032209

Nozzle diameter (ØD)	Maximum nozzle length (H_{max}) [1]
50 to 80 mm (2 to 3.2 in)	750 mm (30 in)
80 to 100 mm (3.2 to 4 in)	1 150 mm (46 in)
100 to 150 mm (4 to 6 in)	1 450 mm (58 in)
≥150 mm (6 in)	2 200 mm (88 in)

1) In the case of longer nozzles, a reduced measuring performance must be anticipated.

Note the following if the antenna does not project out of the nozzle:
- The end of the nozzle must be smooth and free from burrs. The edge of the nozzle should be rounded if possible.
- Mapping must be performed.
- Please contact Endress+Hauser for applications with nozzles that are higher than indicated in the table.

6.2.4 Information concerning threaded connections

- When screwing in, turn by the hex bolt only.
- Tool: open-ended wrench 55 mm
- Maximum permissible torque: 50 Nm (36 lbf ft)

6.3 Container with heat insulation

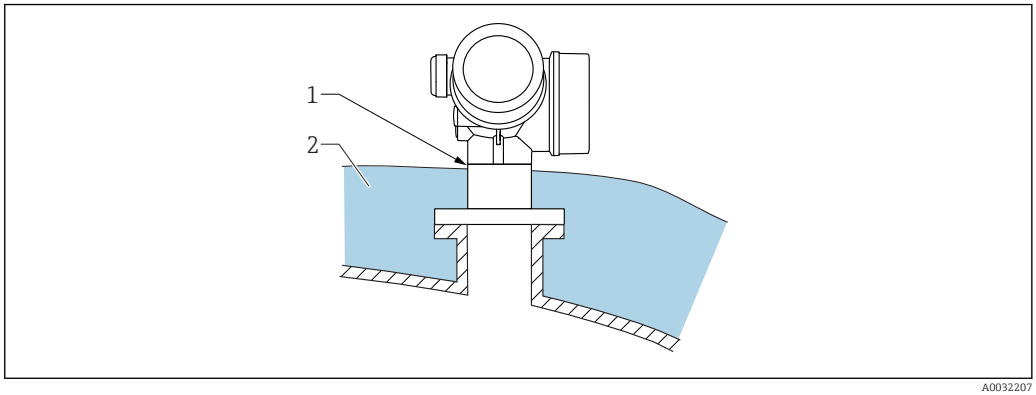

A0032207

If process temperatures are high, the device should be included in the usual container insulation system (2) to prevent the electronics from heating as a result of thermal radiation or convection. The insulation should not be higher than the neck of the device (1).

6.4 Turning the transmitter housing

To provide easier access to the connection compartment or display module, the transmitter housing can be turned:

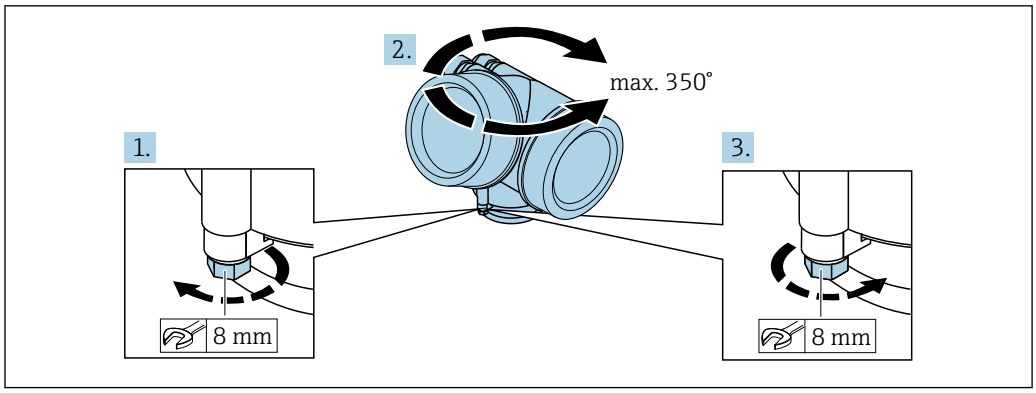

1. Unscrew the securing screw using an open-ended wrench.
2. Rotate the housing in the desired direction.
3. Tighten the securing screw (1.5 Nm for plastic housing; 2.5 Nm for aluminum or stainless steel housing).

6.5 Turning the display

6.5.1 Opening cover

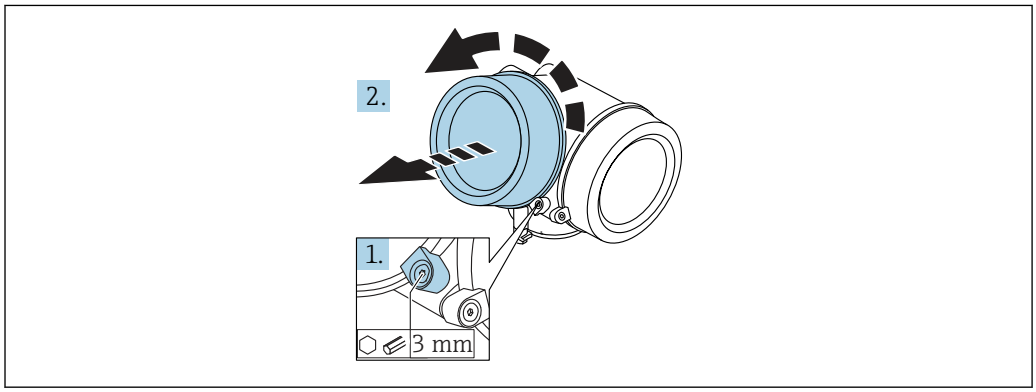

1. Loosen the screw of the securing clamp of the electronics compartment cover using an Allen key (3 mm) and turn the clamp 90 ° counterclockwise.
2. Unscrew cover and check lid gasket, replace if necessary.

6.5.2 Turning the display module

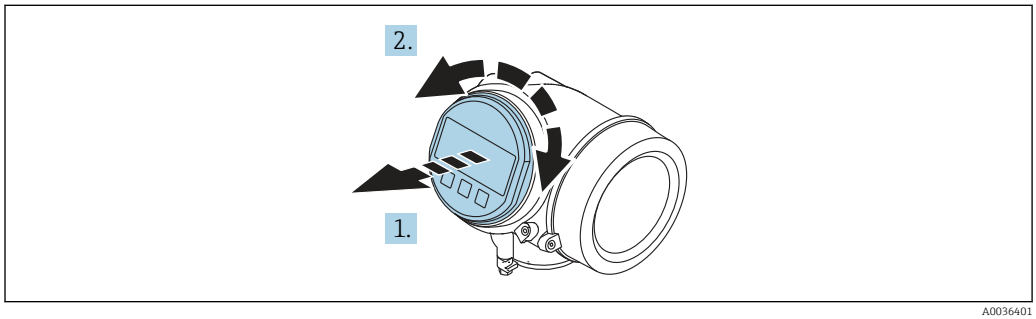

1. Pull out the display module with a gentle rotational movement.

2. Rotate the display module to the desired position: max. 8 × 45 ° in each direction.
3. Feed the coiled cable into the gap between the housing and main electronics module and plug the display module into the electronics compartment until it engages.

6.5.3 Closing electronics compartment cover

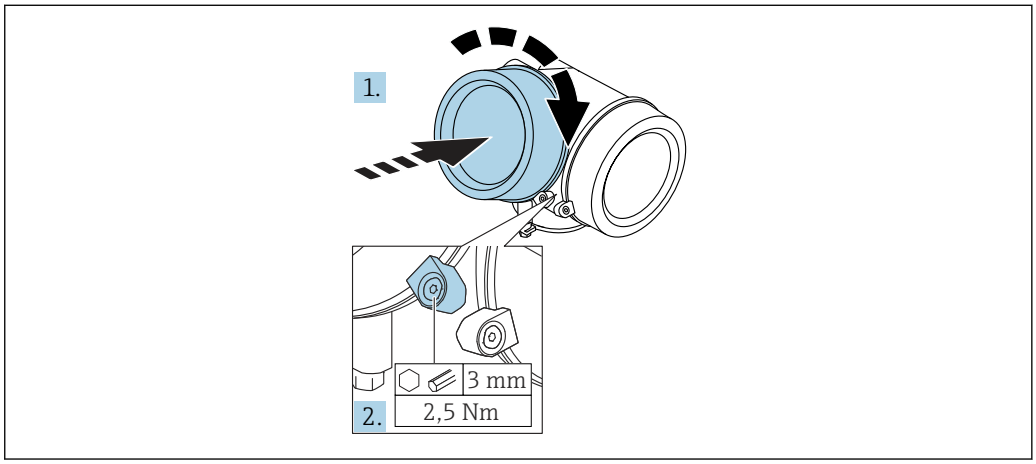

A0021451

1. Screw back firmly electronics compartment cover.
2. Turning securing clamp 90 ° clockwise and tighten the clamp with 2.5 Nm using the Allen key (3 mm).

6.6 Post-installation check

❑	Is the device undamaged (visual inspection)?
❑	Does the device conform to the measuring point specifications? For example: ▪ Process temperature ▪ Process pressure (refer to the chapter on "Material load curves" of the "Technical Information" document) ▪ Ambient temperature range ▪ Measuring range
❑	Are the measuring point identification and labeling correct (visual inspection)?
❑	Is the device adequately protected from precipitation and direct sunlight?
❑	Are the securing screw and securing clamp tightened securely?

7 Electrical connection

7.1 Connection conditions

7.1.1 Terminal assignment

Terminal assignment 2-wire: 4-20 mA HART

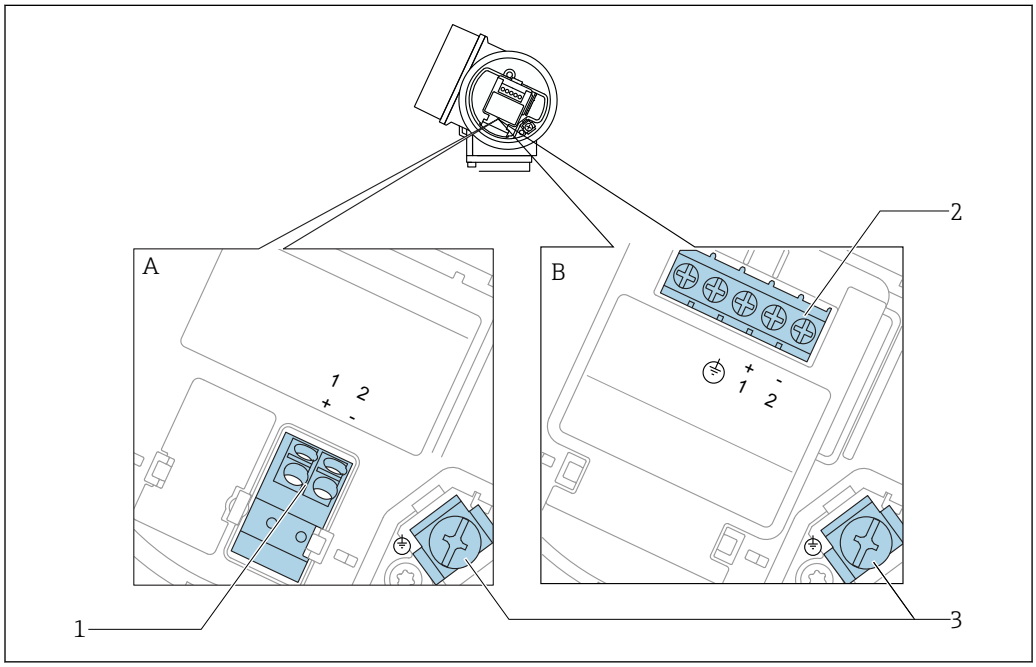

5 *Terminal assignment 2-wire: 4-20 mA HART*

A Without integrated overvoltage protection
B With integrated overvoltage protection
1 Connection 4-20 mA HART passive: terminals 1 and 2, without integrated overvoltage protection
2 Connection 4-20 mA HART passive: terminals 1 and 2, with integrated overvoltage protection
3 Terminal for cable screen

Block diagram 2-wire: 4-20 mA HART

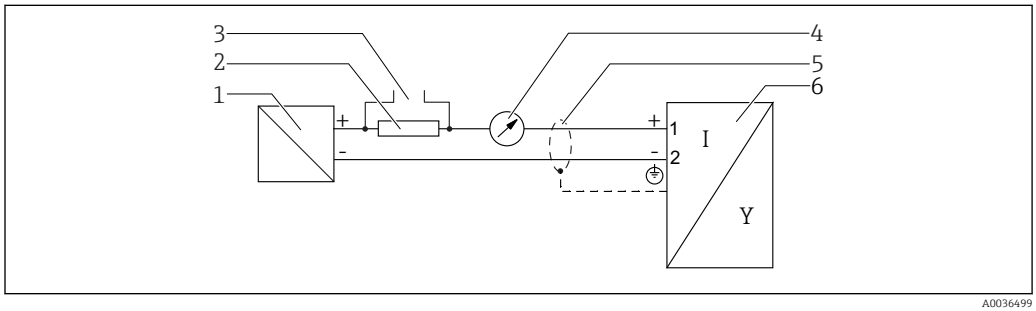

6 *Block diagram 2-wire: 4-20 mA HART*

1 Active barrier with power supply (e.g. RN221N); observe terminal voltage
2 HART communication resistor (≥ 250 Ω); observe maximum load
3 Connection for Commubox FXA195 or FieldXpert SFX350/SFX370 (via VIATOR Bluetooth modem)
4 Analog display device; observe maximum load
5 Cable screen; observe cable specification
6 Measuring device

Terminal assignment 2-wire: 4-20 mA HART, switch output

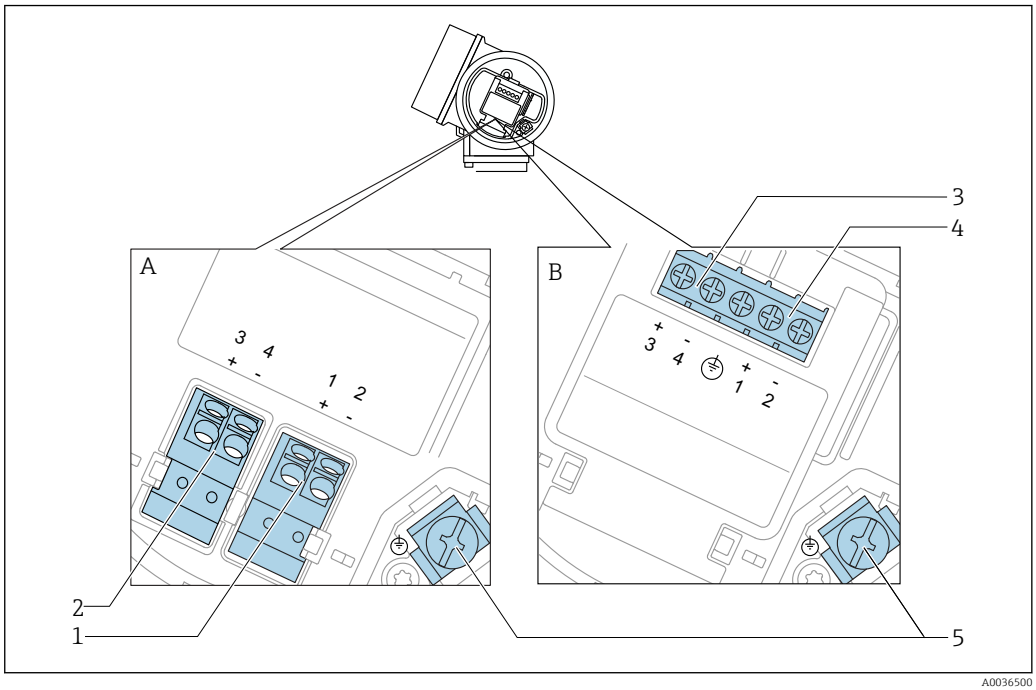

7 *Terminal assignment 2-wire: 4-20 mA HART, switch output*

A Without integrated overvoltage protection
B With integrated overvoltage protection
1 Connection 4-20 mA HART passive: terminals 1 and 2, without integrated overvoltage protection
2 Connection switch output (Open Collector): terminals 3 and 4, without integrated overvoltage protection
3 Connection switch output (Open Collector): terminals 3 and 4, with integrated overvoltage protection
4 Connection 4-20 mA HART passive: terminals 1 and 2, with integrated overvoltage protection
5 Terminal for cable screen

Block diagram 2-wire: 4-20 mA HART, switch output

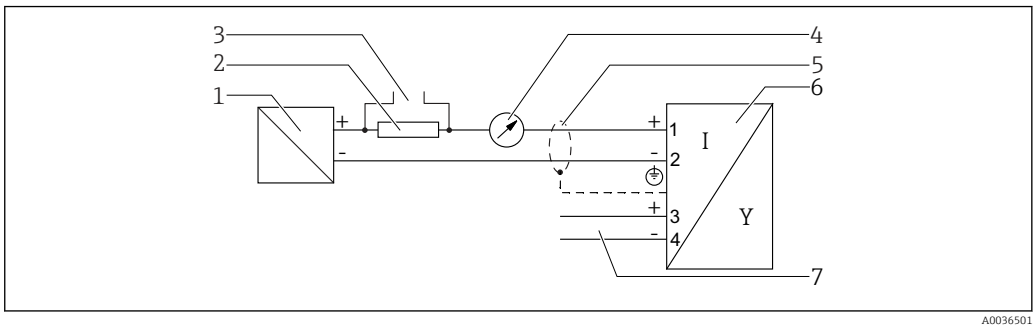

8 *Block diagram 2-wire: 4-20 mA HART, switch output*

1 Active barrier with power supply (e.g. RN221N); observe terminal voltage
2 HART communication resistor (≥ 250 Ω); observe maximum load
3 Connection for Commubox FXA195 or FieldXpert SFX350/SFX370 (via VIATOR Bluetooth modem)
4 Analog display device; observe maximum load
5 Cable screen; observe cable specification
6 Measuring device
7 Switch output (Open Collector)

Terminal assignment 2-wire: 4-20 mA HART, 4-20 mA

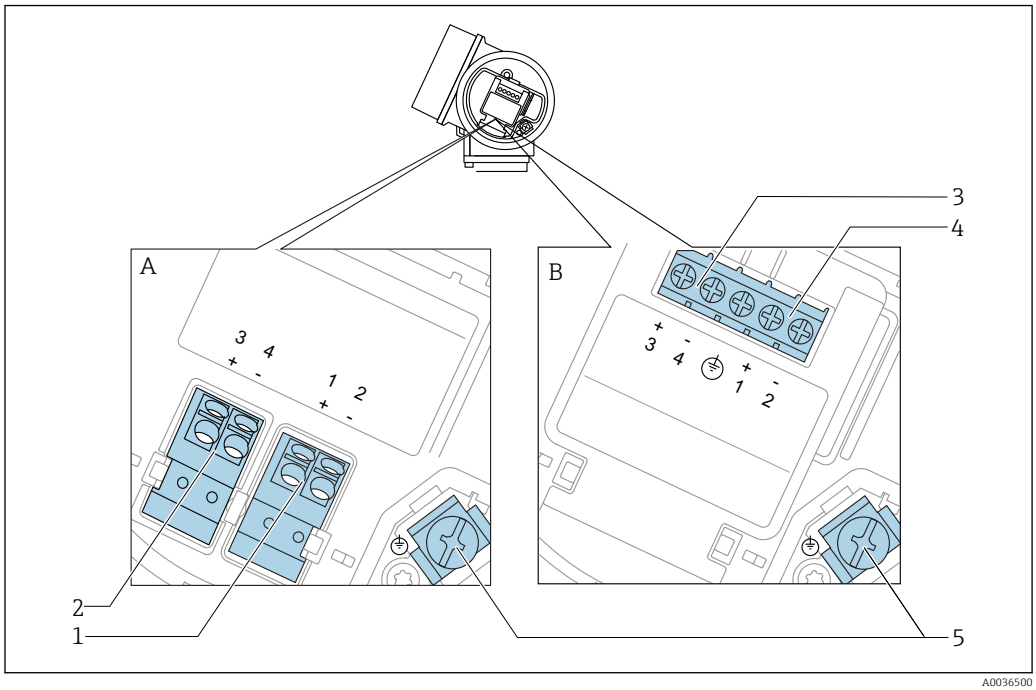

9 *Terminal assignment 2-wire: 4-20 mA HART, 4-20 mA*

A Without integrated overvoltage protection
B With integrated overvoltage protection
1 Connection current output 1, 4-20 mA HART passive: terminals 1 and 2, without integrated overvoltage protection
2 Connection current output 2, 4-20 mA: terminals 3 and 4, without integrated overvoltage protection
3 Connection current output 2, 4-20 mA: terminals 3 and 4, with integrated overvoltage protection
4 Connection current output 1, 4-20 mA HART passive: terminals 1 and 2, with integrated overvoltage protection
5 Terminal for cable screen

Block diagram 2-wire: 4-20 mA HART, 4-20 mA

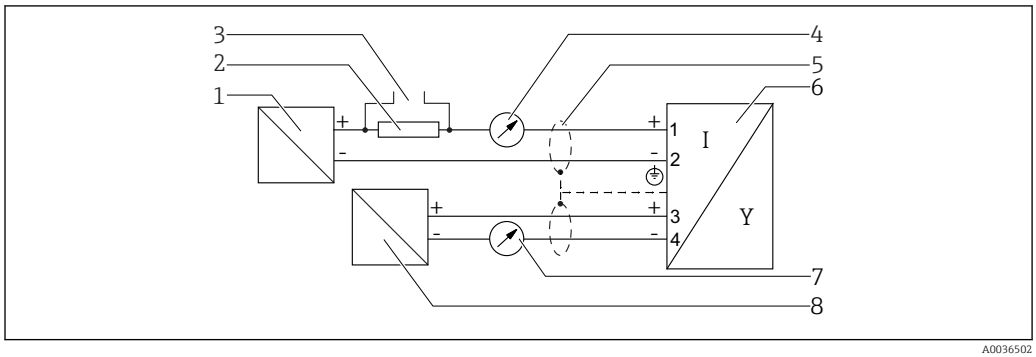

10 *Block diagram 2-wire: 4-20 mA HART, 4-20 mA*

1 Active barrier with power supply (e.g. RN221N); observe terminal voltage
2 HART communication resistor (≥ 250 Ω); observe maximum load
3 Connection for Commubox FXA195 or FieldXpert SFX350/SFX370 (via VIATOR Bluetooth modem)
4 Analog display device; observe maximum load
5 Cable screen; observe cable specification
6 Measuring device
7 Analog display device; observe maximum load
8 Active barrier with power supply (e.g. RN221N), current output 2; observe terminal voltage

Connection examples for the switch output

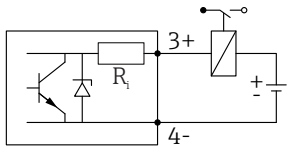

11 Connection of a relay

Suitable relays (examples):
- Solid-state relay: Phoenix Contact OV-24DC/480AC/5 with mounting rail connector UMK-1 OM-R/AMS
- Electromechanical relay: Phoenix Contact PLC-RSC-12DC/21

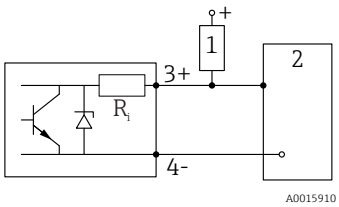

12 Connection of a digital input

1 Pull-up resistor
2 Digital input

For optimum interference immunity we recommend to connect an external resistor (internal resistance of the relay or Pull-up resistor) of < 1 000 Ω.

7.1.2 Cable specification

- **Devices without integrated overvoltage protection**
  Pluggable spring-force terminals for wire cross-sections 0.5 to 2.5 mm² (20 to 14 AWG)
- **Devices with integrated overvoltage protection**
  Screw terminals for wire cross-sections 0.2 to 2.5 mm² (24 to 14 AWG)
- For ambient temperature $T_U \geq 60$ °C (140 °F): use cable for temperature T_U +20 K.

HART

- A normal device cable suffices if only the analog signal is used.
- A shielded cable is recommended if using the HART protocol. Observe grounding concept of the plant.

7.1.3 Device plug connectors

For the versions with fieldbus plug connector (M12 or 7/8"), the signal line can be connected without opening the housing.

Pin assignment of the M12 plug connector

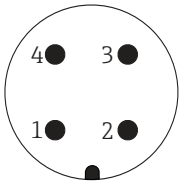

Pin	Meaning
1	Signal +
2	not connected
3	Signal -
4	Ground

Pin assignment of the 7/8" plug connector

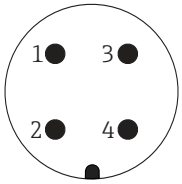

Pin	Meaning
1	Signal -
2	Signal +
3	Not connected
4	Screen

7.1.4 Supply voltage

2-wire, 4-20 mA HART, passive

"Power supply, output" [1]	"Approval" [2]	Terminal voltage U at device	Maximum load R, depending on the supply voltage U_0 of the power supply unit
A: 2-wire; 4-20 mA HART	▪ Non-hazardous ▪ Ex nA ▪ Ex ic ▪ CSA GP	14 to 35 V [3]	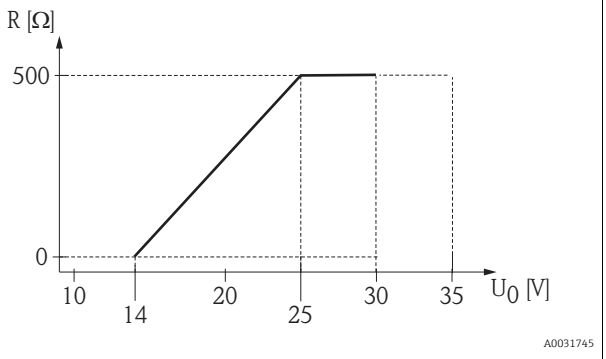
	Ex ia / IS	14 to 30 V [3]	
	▪ Ex d(ia) / XP ▪ Ex ic(ia) ▪ Ex nA(ia) ▪ Ex ta / DIP	14 to 35 V [3] [4]	
	Ex ia + Ex d(ia) / IS + XP	14 to 30 V [3]	

1) Feature 020 in the product structure
2) Feature 010 in the product structure
3) If the Bluetooth modem is used, the minimum supply voltage increases by 2 V.
4) At ambient temperatures $TT_a \leq -20$ °C, a terminal voltage U ≥ 16 V is required to start the device with the minimum failure current (3.6 mA).

"Power supply, output" [1]	"Approval" [2]	Terminal voltage U at device	Maximum load R, depending on the supply voltage U_0 of the power supply unit
B: 2-wire; 4-20 mA HART, switch outpu	▪ Non-hazardous ▪ Ex nA ▪ Ex nA(ia) ▪ Ex ic ▪ Ex ic(ia) ▪ Ex d(ia) / XP ▪ Ex ta / DIP ▪ CSA GP	16 to 35 V [3]	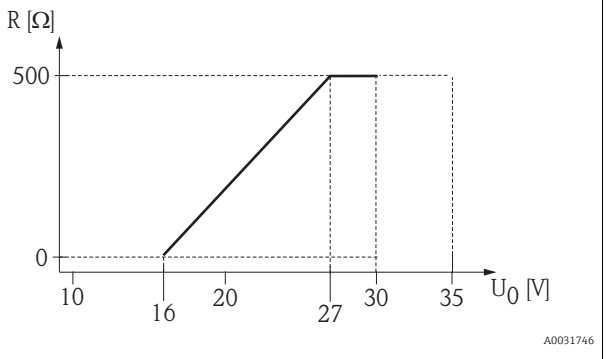
	▪ Ex ia / IS ▪ Ex ia + Ex d(ia) / IS + XP	16 to 30 V [3]	

1) Feature 020 in the product structure
2) Feature 010 in the product structure
3) If the Bluetooth modem is used, the minimum supply voltage increases by 2 V.

"Power supply, output" [1]	"Approval" [2]	Terminal voltage U at device	Maximum load R, depending on the supply voltage U_0 of the power supply unit
C: 2-wire; 4-20 mA HART, 4-20 mA	All	16 to 30 V [3]	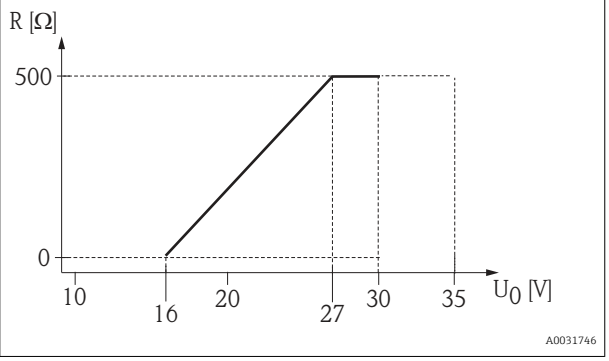

1) Feature 020 in the product structure
2) Feature 010 in the product structure
3) If the Bluetooth modem is used, the minimum supply voltage increases by 2 V.

Integrated polarity reversal protection	Yes
Permitted residual ripple with f = 0 to 100 Hz	U_{SS} < 1 V
Permitted residual ripple with f = 100 to 10 000 Hz	U_{SS} < 10 mV

7.1.5 Overvoltage protection

If the measuring device is used for level measurement in flammable liquids which requires the use of overvoltage protection according to DIN EN 60079-14, standard for test procedures 60060-1 (10 kA, pulse 8/20 µs), an overvoltage protection module has to be installed.

Integrated overvoltage protection module

An integrated overvoltage protection module is available for 2-wire HART devices.

Product structure: Feature 610 "Accessory mounted", option NA "Overvoltage protection".

Technical data	
Resistance per channel	2 × 0.5 Ω max.
Threshold DC voltage	400 to 700 V
Threshold impulse voltage	< 800 V
Capacitance at 1 MHz	< 1.5 pF
Nominal arrest impulse voltage (8/20 µs)	10 kA

External overvoltage protection module

HAW562 or HAW569 from Endress+Hauser are suited as external overvoltage protection.

7.1.6 Connecting the measuring device

⚠ WARNING

Risk of explosion!

- Observe applicable national standards.
- Comply with the specifications in the Safety Instructions (XA).
- Use specified cable glands only.
- Check to ensure that the power supply matches the information on the nameplate.
- Switch off the power supply before connecting the device.
- Connect the potential matching line to the outer ground terminal before applying the power supply.

Required tools/accessories:

- For devices with a cover lock: Allen key AF3
- Wire stripper
- When using stranded cables: One ferrule for every wire to be connected.

Opening connection compartment cover

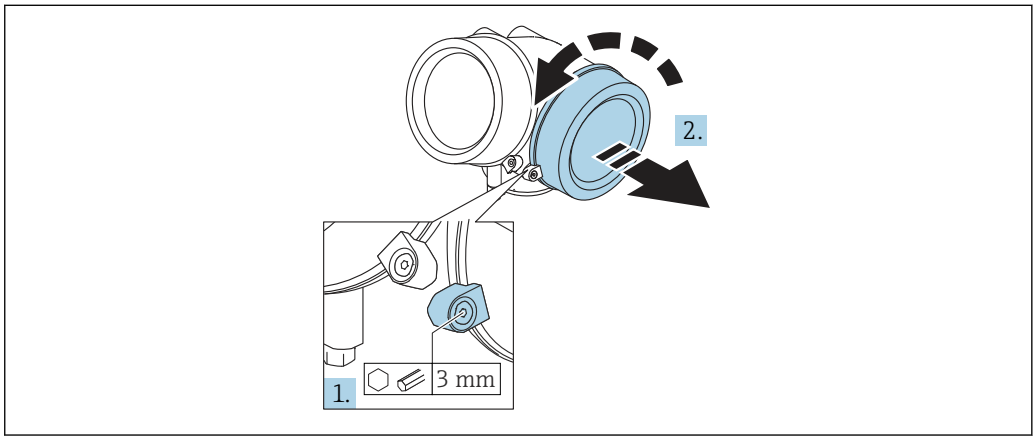

A0021490

1. Loosen the screw of the securing clamp of the connection compartment cover using an Allen key (3 mm) and turn the clamp 90 ° clockwise.
2. Afterwards unscrew connection compartment cover and check lid gasket, replace if necessary.

Connecting

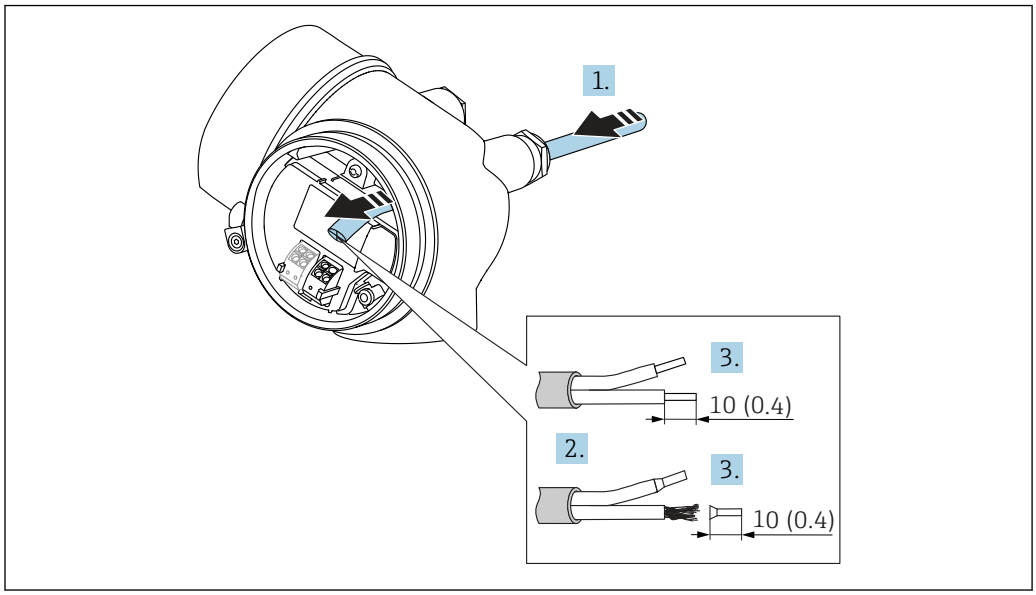

13 *Dimensions: mm (in)*

1. Push the cable through the cable entry . To ensure tight sealing, do not remove the sealing ring from the cable entry.
2. Remove the cable sheath.
3. Strip the cable ends over a length of 10 mm (0.4 in). In the case of stranded cables, also fit ferrules.
4. Firmly tighten the cable glands.
5. Connect the cable in accordance with the terminal assignment.

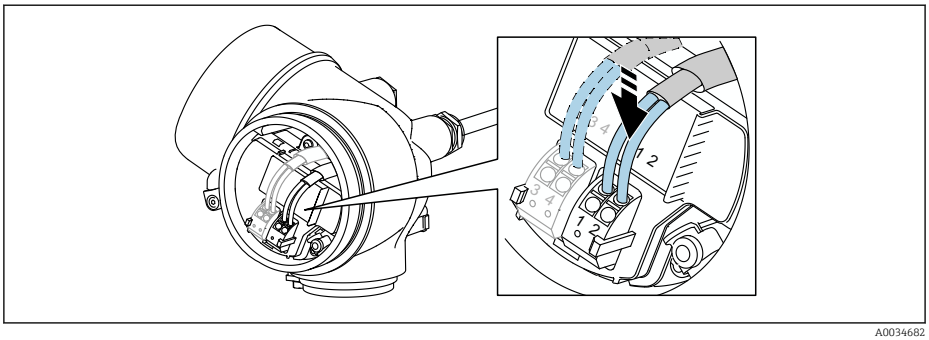

6. If using shielded cables: Connect the cable shield to the ground terminal.

Plug-in spring-force terminals

In the case of devices without integrated overvoltage protection, electrical connection is via plug-in spring-force terminals. Rigid conductors or flexible conductors with ferrules can be inserted directly into the terminal without using the lever, and create a contact automatically.

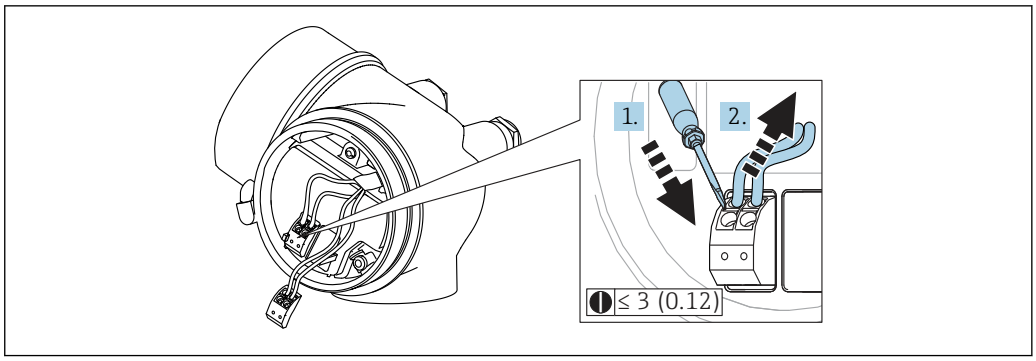

14 *Dimensions: mm (in)*

To remove cables from the terminal:

1. Using a flat-blade screwdriver ≤ 3 mm, press down on the slot between the two terminal holes
2. while simultaneously pulling the cable end out of the terminal.

Closing connection compartment cover

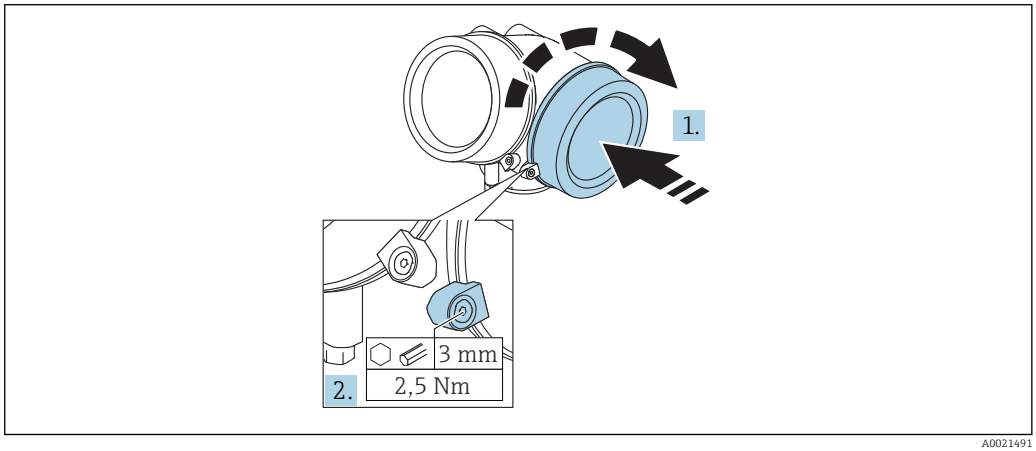

1. Screw back firmly connection compartment cover.
2. Turning securing clamp 90 ° counterclockwise and tighten the clamp with 2.5 Nm (1.84 lbf ft) again using the Allen key (3 mm).

7.1.7 Post-connection check

❑	Is the device or cable undamaged (visual check)?
❑	Do the cables comply with the requirements ?
❑	Do the cables have adequate strain relief?
❑	Are all cable glands installed, securely tightened and leak-tight?
❑	Does the supply voltage match the specifications on the nameplate?
❑	Is the terminal assignment correct?
❑	If required: Has protective ground connection been established ?
❑	If supply voltage is present, is the device ready for operation and do values appear on the display module?
❑	Are all housing covers installed and securely tightened?
❑	Is the securing clamp tightened correctly?

8 Operation options

8.1 Overview

8.1.1 Local operation

Operation with	*Pushbuttons*	*Touch Control*
Order code for "Display; Operation"	Option **C** "SD02"	Option **E** "SD03"
	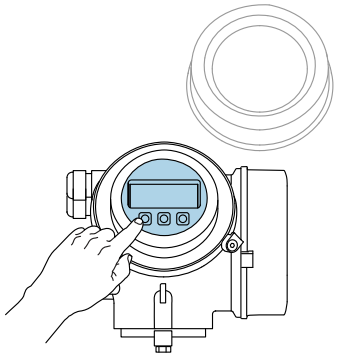 A0036312	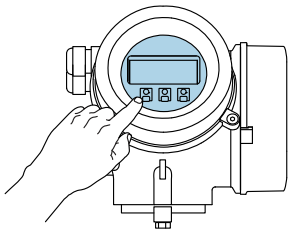 A0036313
Display elements	4-line display	4-line display white background lighting; switches to red in event of device error
	Format for displaying measured variables and status variables can be individually configured	
	Permitted ambient temperature for the display: –20 to +70 °C (–4 to +158 °F) The readability of the display may be impaired at temperatures outside the temperature range.	
Operating elements	local operation with 3 push buttons (⊞, ⊟, Ⓔ)	external operation via touch control; 3 optical keys: ⊞, ⊟, Ⓔ
	Operating elements also accessible in various hazardous areas	
Additional functionality	Data backup function The device configuration can be saved in the display module.	
	Data comparison function The device configuration saved in the display module can be compared to the current device configuration.	
	Data transfer function The transmitter configuration can be transmitted to another device using the display module.	

8.1.2 Operation with remote display and operating module FHX50

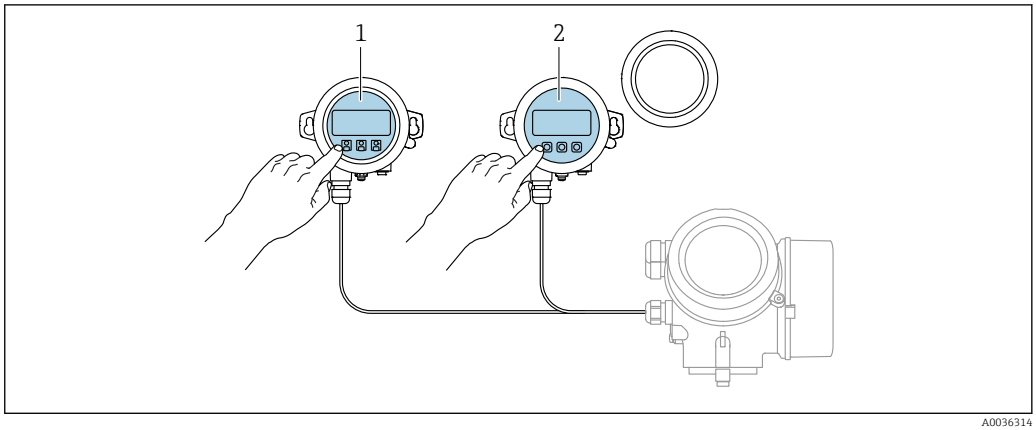

15 *FHX50 operating options*

1 Display and operating module SD03, optical keys; can be operated through the glass of the cover
2 Display and operating module SD02, push buttons; cover must be removed

8.1.3 Operation via Bluetooth® wireless technology

Requirements

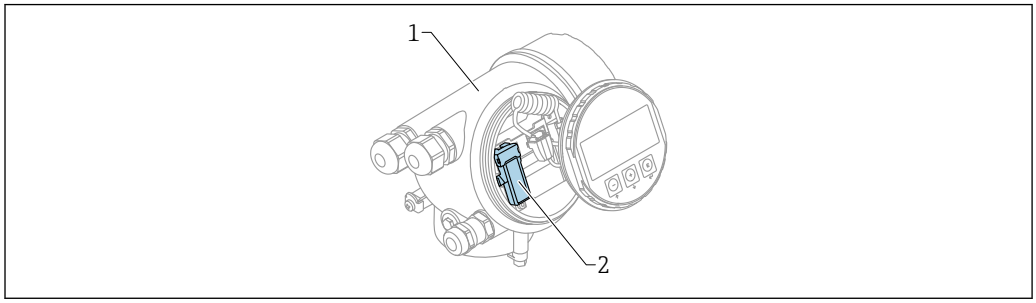

16 Device with Bluetooth module

1 Electronics housing of the device
2 Bluetooth module

This operation option is only available for devices with Bluetooth module. There are the following options:
- The device has been ordered with a Bluetooth module:
  Feature 610 "Accessory Mounted", option NF "Bluetooth"
- The Bluetooth module has been ordered as an accessory (ordering number: 71377355) and has been mounted. See Special Documentation SD02252F.

Operation via SmartBlue (app)

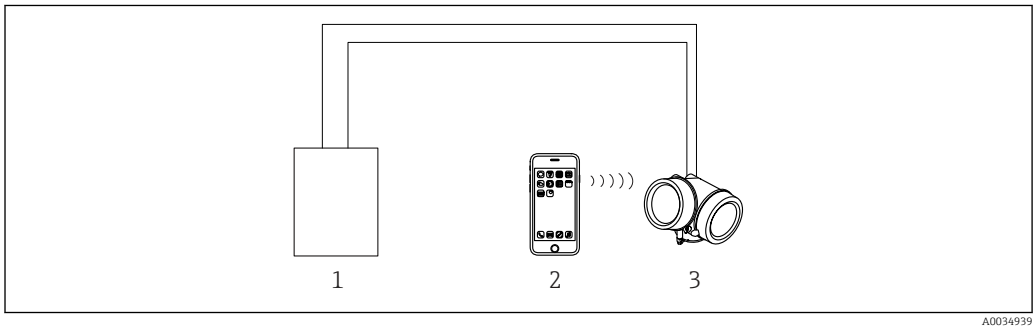

17 Operation via SmartBlue (app)

1 Transmitter power supply unit
2 Smartphone / tablet with SmartBlue (app)
3 Transmitter with Bluetooth module

8.1.4 Remote operation

Via HART protocol

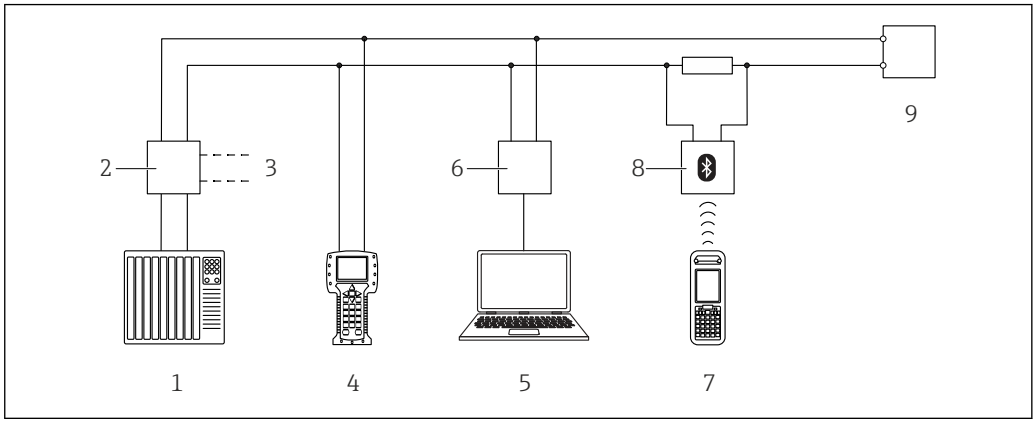

18 *Options for remote operation via HART protocol*

1 *PLC (Programmable Logic Controller)*
2 *Transmitter power supply unit, e.g. RN221N (with communication resistor)*
3 *Connection for Commubox FXA191, FXA195 and Field Communicator 375, 475*
4 *Field Communicator 475*
5 *Computer with operating tool (e.g. DeviceCare/FieldCare , AMS Device Manager, SIMATIC PDM)*
6 *Commubox FXA191 (RS232) or FXA195 (USB)*
7 *Field Xpert SFX350/SFX370*
8 *VIATOR Bluetooth modem with connecting cable*
9 *Transmitter*

DeviceCare/FieldCare via service interface (CDI)

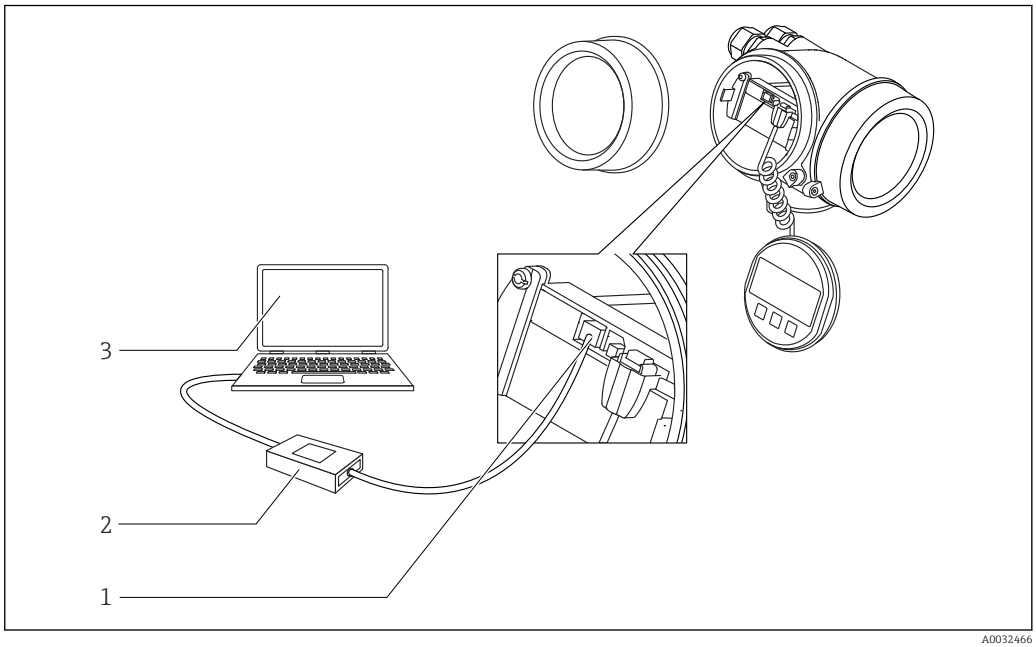

19 *DeviceCare/FieldCare via service interface (CDI)*

1 *Service interface (CDI) of the instrument (= Endress+Hauser Common Data Interface)*
2 *Commubox FXA291*
3 *Computer with DeviceCare/FieldCare operating tool*

8.2 Structure and function of the operating menu

8.2.1 Structure of the operating menu

Menu	Submenu / parameter	Meaning
	Language [1]	Defines the operating language of the on-site display
Commissioning [2]		Launches the interactive wizard for guided commissioning. Additional settings generally do not need to be made in the other menus when the wizard is finished.
Setup	Parameter 1 ... Parameter N	Once values have been set for these parameters, the measurement should generally be completely configured.
	Advanced setup	Contains additional submenus and parameters: ▪ to adapt the device to special measuring conditions. ▪ to process the measured value (scaling, linearization). ▪ to configure the signal output.
Diagnostics	**Diagnostic list**	Contains up to 5 currently active error messages.
	Event logbook [3]	Contains the last 20 messages (which are no longer active).
	Device information	Contains information for identifying the device.
	Measured values	Contains all current measured values.
	Data logging	Contains the history of the individual measuring values.
	Simulation	Is used to simulate measured values or output values.
	Device check	Contains all parameters needed to check the measurement capability of the device.
	Heartbeat [4]	Contains all the wizards for the **Heartbeat Verification** and **Heartbeat Monitoring** application packages.
Expert [5] Contains all parameters of the device (including those that are already in one of the other menus). This menu is organized according to the function blocks of the device. The parameters of the Expert menu are described in: GP01101F (HART)	**System**	Contains all higher-order device parameters that do not concern the measurement or measured value communication.
	Sensor	Contains all parameters needed to configure the measurement.
	Output	▪ Contains all parameters needed to configure the current output. ▪ Contains all parameters needed to configure the switch output (PFS).

Menu	Submenu / parameter	Meaning
	Communication	Contains all parameters needed to configure the digital communication interface.
	Diagnostics	Contains all parameters needed to detect and analyze operational errors.

1) If operating via operating tools (e.g. FieldCare), the "Language" parameter is located under "Setup → Advanced setup → Display"
2) Only if operating via an FDT/DTM system
3) only available with local operation
4) only available if operating via DeviceCare or FieldCare
5) On entering the "Expert" menu, an access code is always requested. If a customer specific access code has not been defined, "0000" has to be entered.

8.2.2 User roles and related access authorization

The two user roles **Operator** and **Maintenance** have different write access to the parameters if a device-specific access code has been defined. This protects the device configuration via the local display from unauthorized access → 42.

Access authorization to parameters

User role	Read access		Write access	
	Without access code (from the factory)	With access code	Without access code (from the factory)	With access code
Operator	✔	✔	✔	--
Maintenance	✔	✔	✔	✔

If an incorrect access code is entered, the user obtains the access rights of the **Operator** role.

The user role with which the user is currently logged on is indicated by the **Access status display** parameter (for display operation) or **Access status tooling** parameter (for tool operation).

8.2.3 Data access - Security

Write protection via access code

Using the device-specific access code, the parameters for the measuring device configuration are write-protected and their values can no longer be changed via local operation.

Define access code via local display

1. Navigate to: Setup → Advanced setup → Administration → Define access code → Define access code
2. Define a max. 4-digit numeric code as an access code.
3. Repeat the same code in **Confirm access code** parameter.
   ↳ The 🔒-symbol appears in front of all write-protected parameters.

Define access code via operating tool (e.g. FieldCare)

1. Navigate to: Setup → Advanced setup → Administration → Define access code
2. Define a max. 4-digit numeric code as an access code.
   ↳ Write protection is active.

Parameters that can always be changed

The write protection does not include certain parameters that do not affect the measurement. Despite the defined access code, they can always be modified, even if the other parameters are locked.

The device automatically locks the write-protected parameters again if a key is not pressed for 10 minutes in the navigation and editing view. The device locks the write-protected parameters automatically after 60 s if the user skips back to the measured value display mode from the navigation and editing view.

- If write access is activated via access code, it can be also be deactivated only via the access code → 43.
- In the "Description of Device Parameters" documents, each write-protected parameter is identified with the 🔒-symbol.

Disabling write protection via access code

If the 🔒-symbol appears on the local display in front of a parameter, the parameter is write-protected by a device-specific access code and its value cannot be changed at the moment using the local display → 📄 42.

The locking of the write access via local operation can be disabled by entering the device-specific access code.

1. After you press E, the input prompt for the access code appears.
2. Enter the access code.
   ↳ The 🔒-symbol in front of the parameters disappears; all previously write-protected parameters are now re-enabled.

Deactivation of the write protection via access code

Via local display

1. Navigate to: Setup → Advanced setup → Administration → Define access code → Define access code
2. Enter **0000**.
3. Repeat **0000** in **Confirm access code** parameter.
   ↳ The write protection is deactivated. Parameters can be changed without entering an access code.

Via an operating tool (e.g. FieldCare)

1. Navigate to: Setup → Advanced setup → Administration → Define access code
2. Enter **0000**.
   ↳ The write protection is deactivated. Parameters can be changed without entering an access code.

Write protection via write protection switch

Unlike parameter write protection via a user-specific access code, this allows write access to the entire operating menu - except for the **"Contrast display" parameter** - to be locked.

The parameter values are now read only and cannot be edited any more (exception **"Contrast display" parameter**):
- Via local display
- Via service interface (CDI)
- Via HART protocol

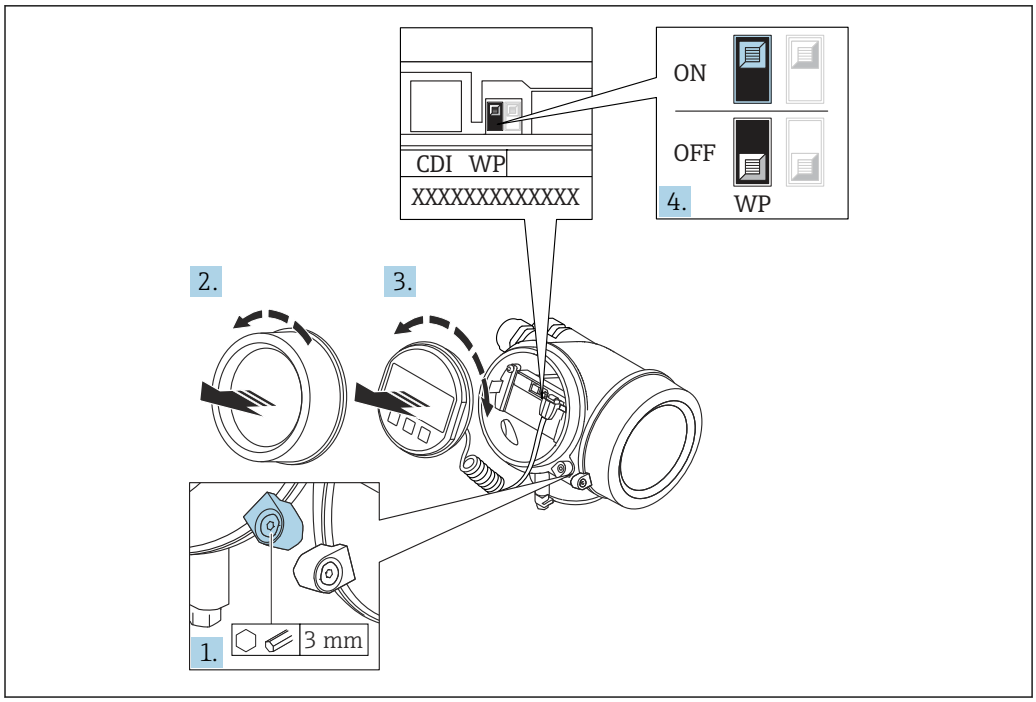

A0026157

1. Loosen the securing clamp.
2. Unscrew the electronics compartment cover.
3. Pull out the display module with a gentle rotational movement. To make it easier to access the lock switch, attach the display module to the edge of the electronics compartment.

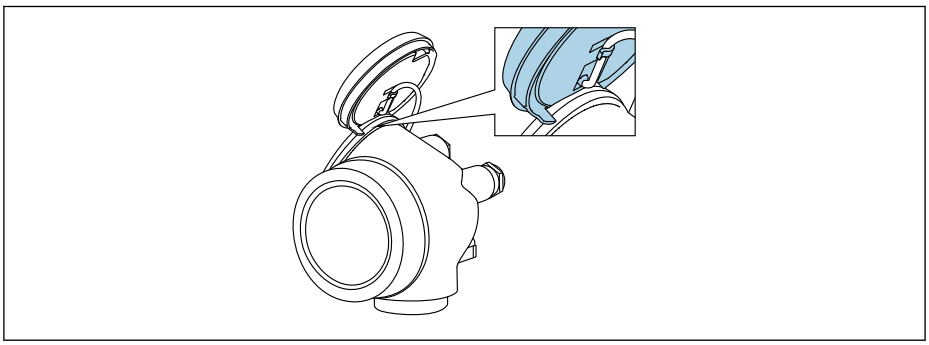

A0036086

4. Setting the write protection switch (WP) on the main electronics module to the **ON** position enables hardware write protection. Setting the write protection switch (WP) on the main electronics module to the **OFF** position (factory setting) disables hardware write protection.
   ↳ If the hardware write protection is enabled: The **Hardware locked** option is displayed in the **Locking status** parameter. In addition, on the local display the 🔒-symbol appears in front of the parameters in the header of the operational display and in the navigation view.

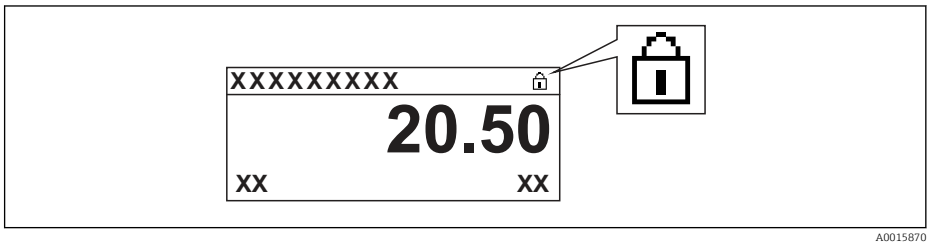

A0015870

   If the hardware write protection is disabled: No option is displayed in the **Locking status** parameter. On the local display, the 🔒-symbol disappears from in front of the parameters in the header of the operational display and in the navigation view.

5. Feed the cable into the gap between the housing and main electronics module and plug the display module into the electronics compartment in the desired direction until it engages.
6. Reverse the removal procedure to reassemble the transmitter.

Enabling and disabling the keypad lock

The keypad lock makes it possible to block access to the entire operating menu via local operation. As a result, it is no longer possible to navigate through the operating menu or change the values of individual parameters. Users can only read the measured values on the operational display.

The keypad lock is switched on and off via the context menu.

Switching on the keypad lock

For the SD03 display only
The keypad lock is switched on automatically:
- If the device has not been operated via the display for > 1 minute.
- Each time the device is restarted.

To activate the keylock manually:

1. The device is in the measured value display.
   Press E for at least 2 seconds.
   ↳ A context menu appears.
2. In the context menu select the **Keylock on** option.
   ↳ The keypad lock is switched on.

If the user attempts to access the operating menu while the keypad lock is active, the message **Keylock on** appears.

Switching off the keypad lock

1. The keypad lock is switched on.
   Press E for at least 2 seconds.
   ↳ A context menu appears.
2. In the context menu select the **Keylock off** option.
   ↳ The keypad lock is switched off.

Bluetooth® wireless technology

Signal transmission via Bluetooth® wireless technology uses a cryptographic technique tested by the Fraunhofer Institute
- The device is not visible via *Bluetooth*® wireless technology without the SmartBlue app
- Only one point-to-point connection between **one** sensor and **one** smartphone or tablet is established

8.3 Display and operating module

8.3.1 Display appearance

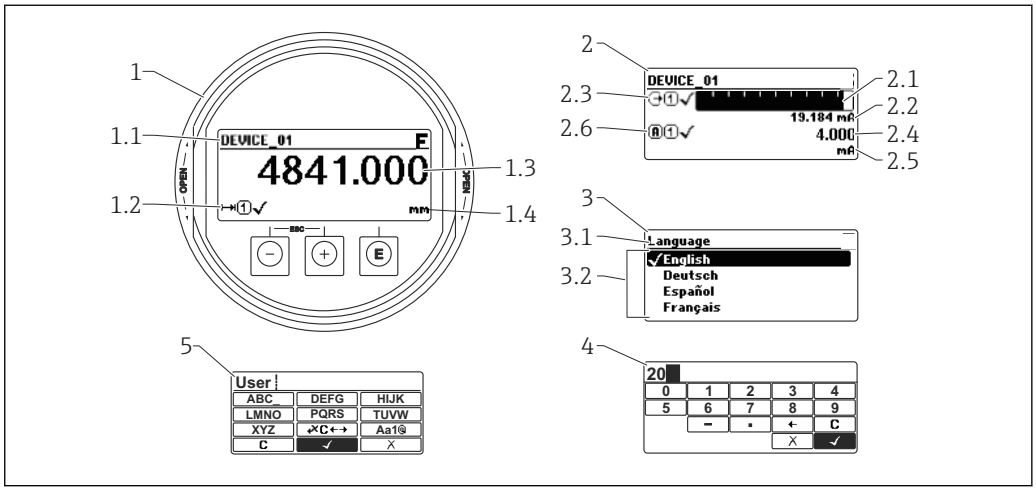

20 *Appearance of the display and operation module for on-site operation*

1 Measured value display (1 value max. size)
1.1 Header containing tag and error symbol (if an error is active)
1.2 Measured value symbols
1.3 Measured value
1.4 Unit
2 Measured value display (1 bargraph + 1 value)
2.1 Bargraph for measured value 1
2.2 Measured value 1 (including unit)
2.3 Measured value symbols for measured value 1
2.4 Measured value 2
2.5 Unit for measured value 2
2.6 Measured value symbols for measured value 2
3 Representation of a parameter (here: a parameter with selection list)
3.1 Header containing parameter name and error symbol (if an error is active)
3.2 Selection list; ☑ marks the current parameter value.
4 Input matrix for numbers
5 Input matrix for alphanumeric and special characters

Display symbols for the submenus

Symbol	Meaning
 A0018367	**Display/operation** Is displayed: ▪ in the main menu next to the selection "Display/operation" ▪ in the header, if you are in the "Display/operation" menu
 A0018364	**Setup** Is displayed: ▪ in the main menu next to the selection "Setup" ▪ in the header, if you are in the "Setup" menu
 A0018365	**Expert** Is displayed: ▪ in the main menu next to the selection "Expert" ▪ in the header, if you are in the "Expert" menu
 A0018366	**Diagnostics** Is displayed: ▪ in the main menu next to the selection "Diagnostics" ▪ in the header, if you are in the "Diagnostics" menu

Status signals

F A0032902	**"Failure"** A device error is present. The measured value is no longer valid.
C A0032903	**"Function check"** The device is in service mode (e.g. during a simulation).
S A0032904	**"Out of specification"** The device is operated: ▪ Outside of its technical specifications (e.g. during startup or a cleaning) ▪ Outside of the configuration carried out by the user (e.g. level outside configured span)
M A0032905	**"Maintenance required"** Maintenance is required. The measured value is still valid.

Display symbols for the locking state

Symbol	Meaning
 A0013148	**Display parameter** Marks display-only parameters which can not be edited.
 A0013150	**Device locked** ▪ In front of a parameter name: The device is locked via software and/or hardware. ▪ In the header of the measured value screen: The device is locked via hardware.

Measured value symbols

Symbol	Meaning
Measured values	
 A0032892	**Level**
 A0032893	**Distance**
 A0032908	**Current output**
 A0032894	**Measured current**
 A0032895	**Terminal voltage**
 A0032896	**Temperature of the electronics or the sensor**
Measuring channels	
 A0032897	**Measuring channel 1**
 A0032898	**Measuring channel 2**
Status of the measured value	
 A0018361	**Status "Alarm"** The measurment is interrupted. The output assumes the defined alarm value. A diagnostic message is generated.
 A0018360	**Status "Warning"** The device continues measuring. A diagnostic message is generated.

8.3.2 Operating elements

Key	Meaning
 A0018330	**Minus key** *For menu, submenu* Moves the selection bar upwards in a picklist. *For text and numeric editor* In the input mask, moves the selection bar to the left (backwards).
 A0018329	**Plus key** *For menu, submenu* Moves the selection bar downwards in a picklist. *For text and numeric editor* In the input mask, moves the selection bar to the right (forwards).
 A0018328	**Enter key** *For measured value display* ▪ Pressing the key briefly opens the operating menu. ▪ Pressing the key for 2 s opens the context menu. *For menu, submenu* ▪ Pressing the key briefly Opens the selected menu, submenu or parameter. ▪ Pressing the key for 2 s for parameter: If present, opens the help text for the function of the parameter. *For text and numeric editor* ▪ Pressing the key briefly – Opens the selected group. – Carries out the selected action. ▪ Pressing the key for 2 s confirms the edited parameter value.
 A0032909	**Escape key combination (press keys simultaneously)** *For menu, submenu* ▪ Pressing the key briefly – Exits the current menu level and takes you to the next higher level. – If help text is open, closes the help text of the parameter. ▪ Pressing the key for 2 s returns you to the measured value display ("home position"). *For text and numeric editor* Closes the text or numeric editor without applying changes.
 A0032910	**Minus/Enter key combination (press and hold down the keys simultaneously)** Reduces the contrast (brighter setting).
 A0032911	**Plus/Enter key combination (press and hold down the keys simultaneously)** Increases the contrast (darker setting).

8.3.3 Entering numbers and text

Numeric editor	Text editor
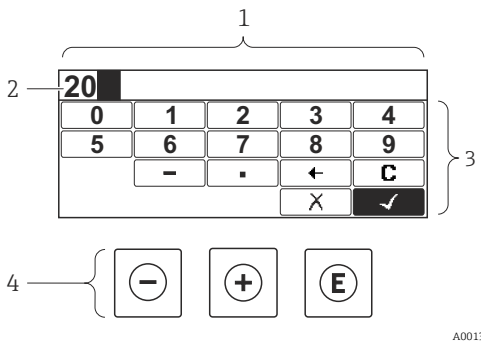	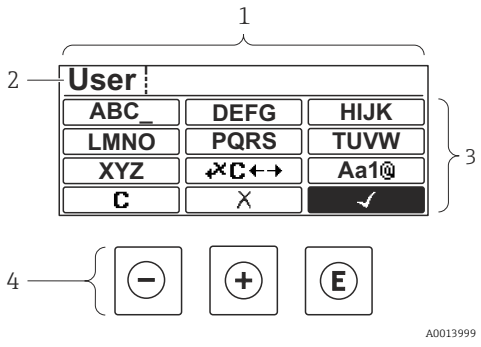

1 *Editing view*
2 *Display area of the entered values*
3 *Input mask*
4 *Operating elements*

Input mask

The following input symbols are available in the input mask of the numeric and text editor:

Numeric editor symbols

Symbol	Meaning
	Selection of numbers from 0 to 9.
	Inserts decimal separator at the input position.
	Inserts minus sign at the input position.
	Confirms selection.
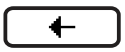	Moves the input position one position to the left.
	Exits the input without applying the changes.
	Clears all entered characters.

Text editor symbols

Symbol	Meaning
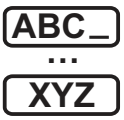	Selection of letters from A to Z
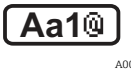	Toggle ▪ Between upper-case and lower-case letters ▪ For entering numbers ▪ For entering special characters

 A0013985	Confirms selection.
 A0013987	Switches to the selection of the correction tools.
 A0013986	Exits the input without applying the changes.
 A0014040	Clears all entered characters.

Correction symbols under

Symbol	Meaning
 A0032907	Clears all entered characters.
 A0018324	Moves the input position one position to the right.
 A0018326	Moves the input position one position to the left.
 A0032906	Deletes one character immediately to the left of the input position.

8.3.4 Opening the context menu

Using the context menu, the user can call up the following menus quickly and directly from the operational display:

- Setup
- Conf. backup disp.
- Env.curve
- Keylock on

Opening and closing the context menu

The user is in the operational display.

1. Press E for 2 s.
   ↳ The context menu opens.

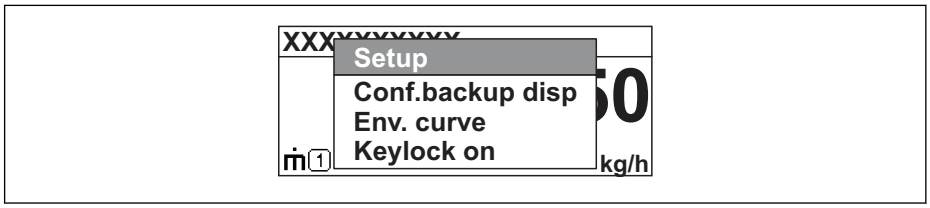

2. Press − + + simultaneously.
   ↳ The context menu is closed and the operational display appears.

Calling up the menu via the context menu

1. Open the context menu.
2. Press + to navigate to the desired menu.
3. Press E to confirm the selection.
   ↳ The selected menu opens.

8.3.5 Envelope curve on the display and operating module

In order to assess the measuring signal, the envelope curve and - if a mapping has been recorded - the mapping curve can be displayed:

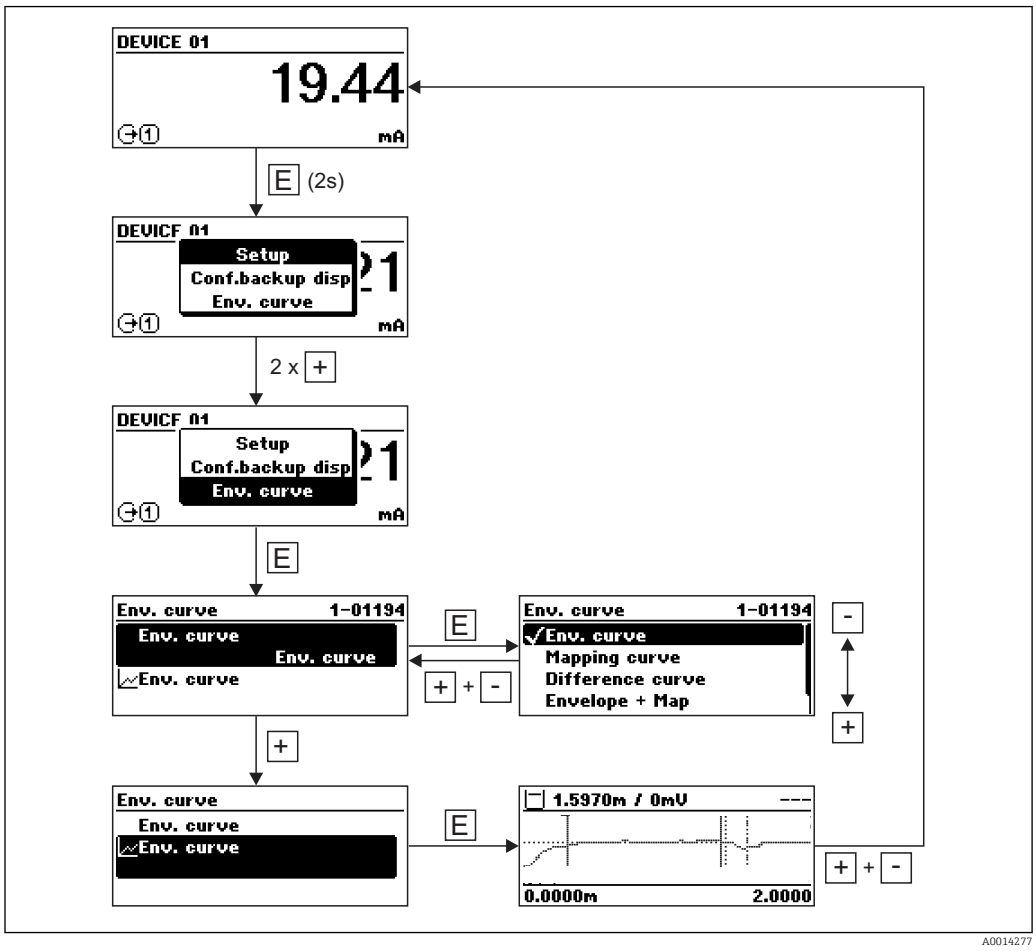

9 System integration via HART protocol

9.1 Overview of the Device Description files (DD)

Manufacturer ID	17 (0x11)
Device type	0x112B
HART specification	7.0
DD files	For information and files see: ▪ www.endress.com ▪ www.hartcomm.org

9.2 Measured values via HART protocol

On delivery the following measruing values are assigned to the HART device varaibles:

Device variable	Measuring value
Primary variable (PV)	Level linearized
Secondary variable (SV)	Distance
Tertiary variable (TV)	Absolute echo amplitude
Quaternary variable (QV)	Relative echo amplitude

The allocation of the device variables can be changed in the operating menu:
Expert → Communication → Output

In a HART multidrop loog only one device may use the output current for signal transmission. For all other devices the follwing must be set:
- **"Current span" parameter** = **"Fixed current" option**
- **"Fixed current" parameter** = **4 mA**

10 Commissioning via SmartBlue (app)

10.1 Requirements

Device requirements
Commissioning via SmartBlue is only possible if the device has a Bluetooth module.

System requirements SmartBlue
SmartBlue is available as download for Android devices from the Google Play Store and for iOS devices from the iTunes Store.
- iOS devices:
  iPhone 4S or higher from iOS9.0; iPad2 or higher from iOS9.0; iPod Touch 5th generation or higher from iOS9.0
- Devices with Android:
  from Android 4.4 KitKat and *Bluetooth*® 4.0

Initial password
The ID of the Bluetooth module serves as the initial password used to establish the first connection to the device. It can be found:
- on the information sheet which is supplied with the device. This serial number specific sheet is also stored in W@M.
- on the nameplate of the Bluetooth module.

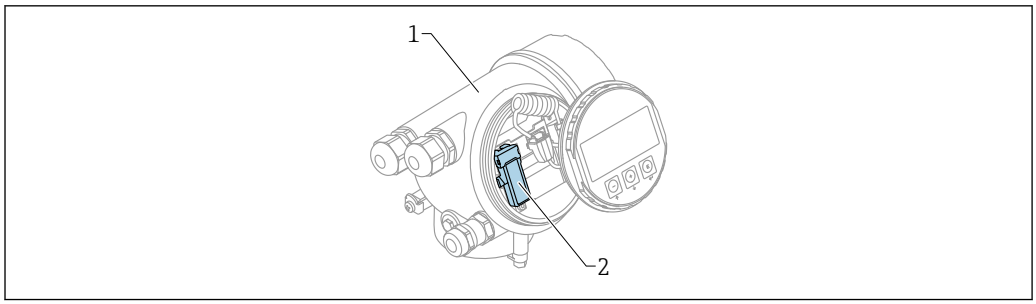

21 Device with Bluetooth module

1 Electronics housing of the device
2 Nameplate of the Bluetooth module; the ID on this nameplate serves as initial password.

All login data (including the password changed by the user) are not stored in the device but in the Bluetooth module. This must be taken into account when the module is removed from one device and inserted into a different device.

10.2 Commissioning

Download and install SmartBlue

1. To download the app, scan the QR code or enter "SmartBlue" in the search field



22 Download link

2. Start SmartBlue



A0029747

23 SmartBlue pictogram

3. Select device from displayed livelist (available devices only)

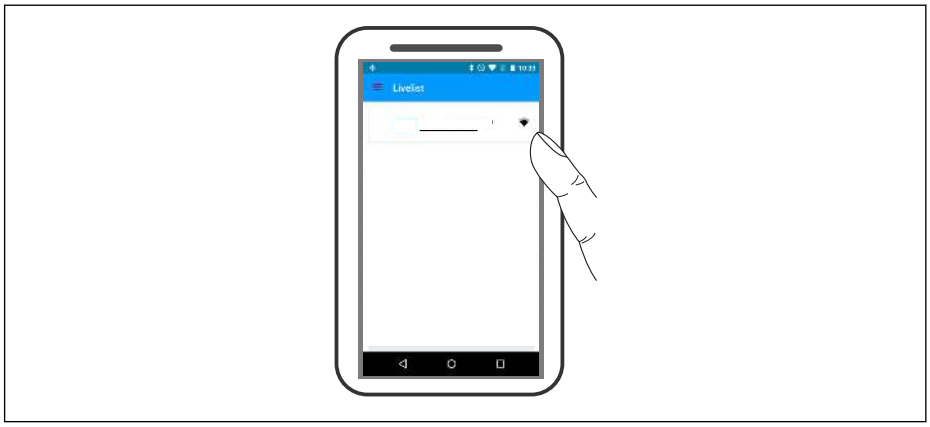

A0029502

24 Livelist

Only one point-to-point connection can be established between **one** sensor and **one** smartphone or tablet.

4. Perform login

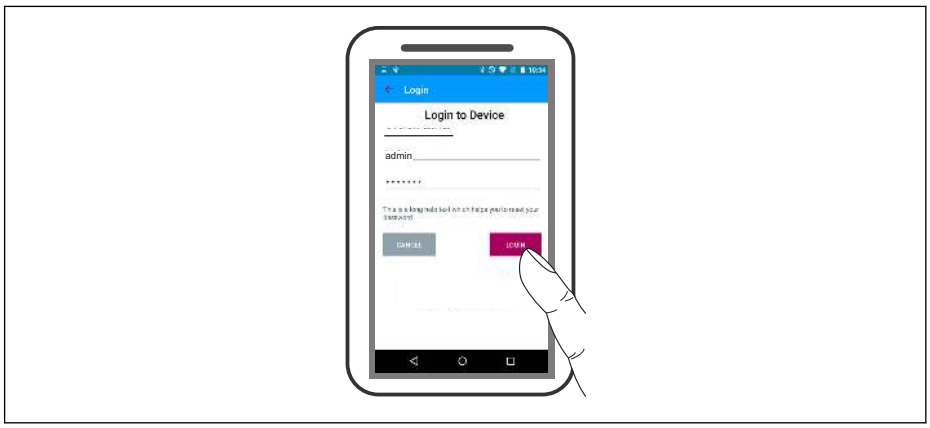

A0029503

25 Login

5. Enter user name -> admin
6. Enter initial password -> ID of the Bluetooth module
7. Change the password after logging in for the first time

8. By wiping from the side, additional information (e.g. main menu) can be dragged into the image

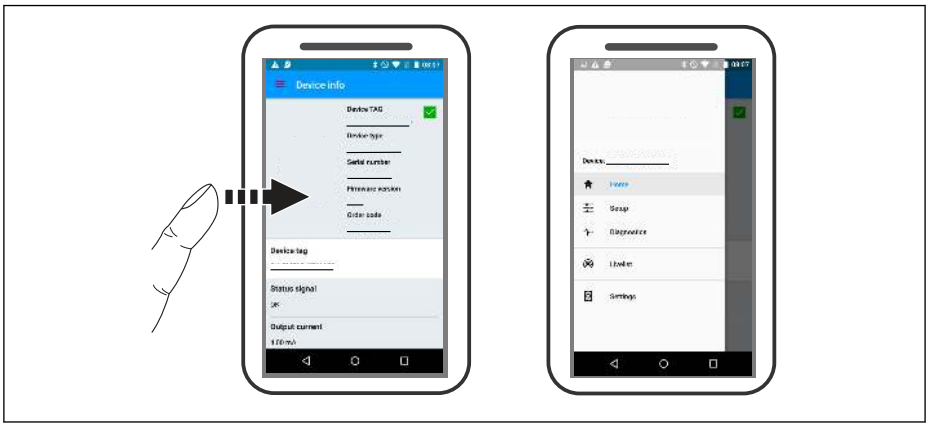

26 *Main menu*

Envelope curves can be displayed and recorded

Additionally to the envelope curve, the following values are displayed:

- D = Distance
- L = Level
- A = Absolute amplitude

- In the case of screenshots, the displayed section (zoom function) is saved
- In video sequences, always the whole area without zoom function is saved

It is also possible to send envelope curves (video sequences) using the relevant smartphone or tablet functions.



27 *Envelope curve display (example) in SmartBlue; Android view*

1 *Record video*
2 *Create screenshot*
3 *Navigation to mapping menu*
4 *Start / stop video recording*
5 *Move time on time axis*

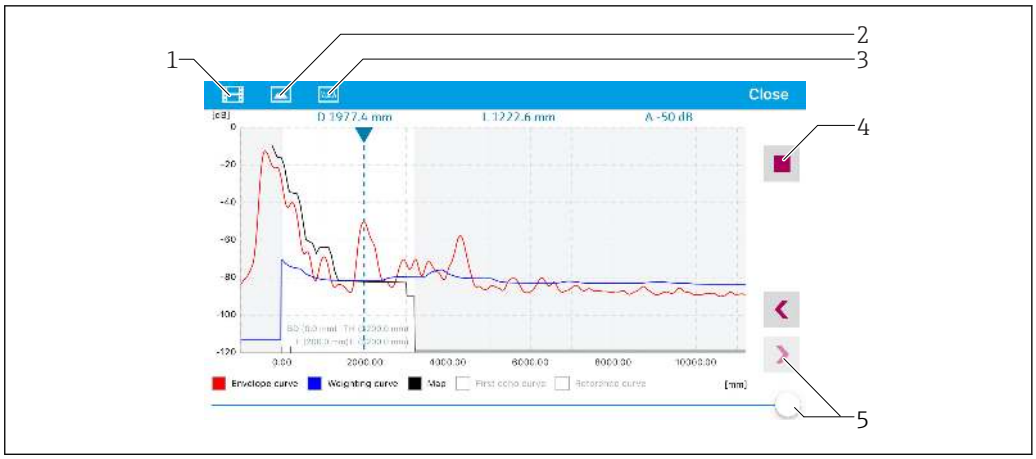

A0029487

28 *Envelope curve display (example) in SmartBlue; IoS view*

1 *Record video*
2 *Create screenshot*
3 *Navigation to mapping menu*
4 *Start / stop video recording*
5 *Move time on time axis*

11 Commissioning via wizard

A wizard guiding the user through the initial setup is available in FieldCare and DeviceCare [1].

1. Connect the device to FieldCare or DeviceCare → 39.
2. Open the device in FieldCare or DeviceCare.
   ↳ The dashboard (home page) of the device appears:

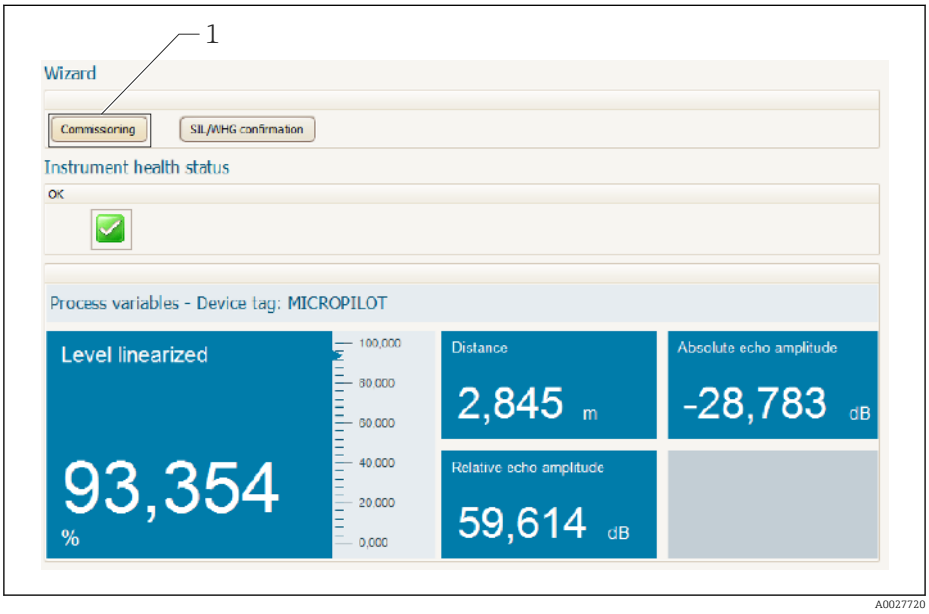

1 "Commissioning" button calls up the wizard.

3. Click on "Commissioning" to call up the wizard.
4. Enter or select the appropriate value for each parameter. These values are immediately written to the device.
5. Click "Next" to switch to the next page.
6. After finishing the last page, click "End of sequence" to close the wizard.

If the wizard is cancelled before all necessary parameters have been set, the device may be in an undefined state. A reset to the default settings is recommended in this case.

1) DeviceCare is available for download at www.software-products.endress.com. The download requires a registration in the Endress+Hauser software portal.

12 Commissioning via operating menu

12.1 Installation and function check

Make sure that all final checks have been completed before you start up your measuring point:

- Checklist "Post-installation check" → 25
- Checklist "Post-connection check" → 35

12.2 Setting the operating language

Factory setting: English or ordered local language

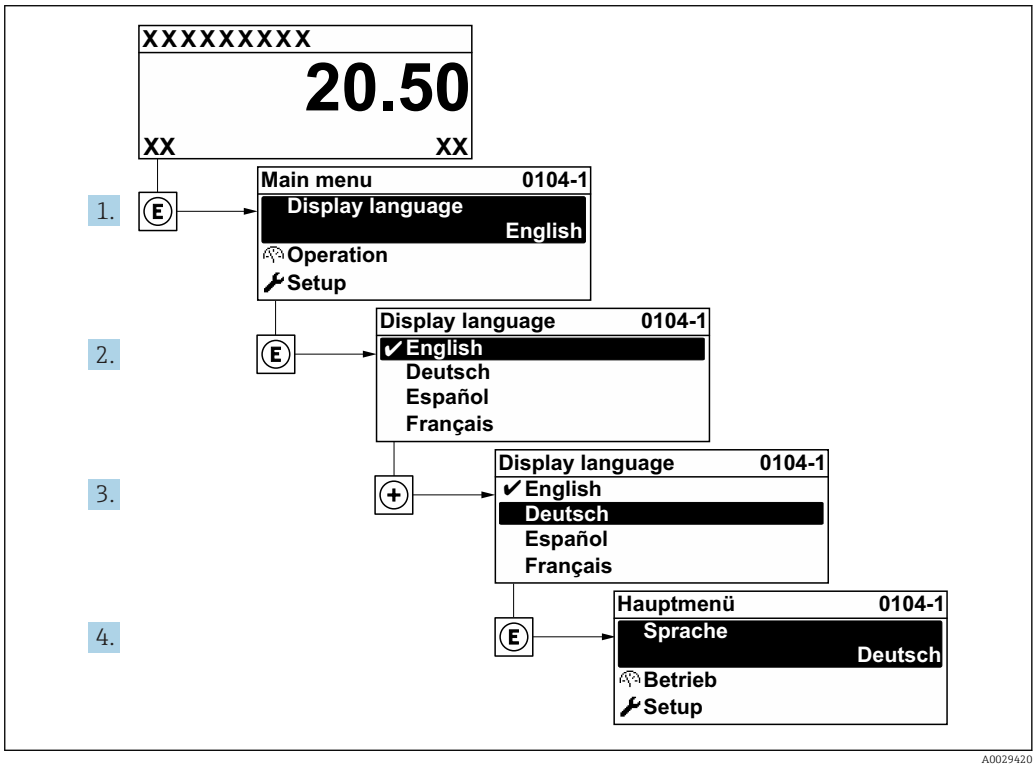

29 *Using the example of the local display*

12.3 Configuration of a level measurement

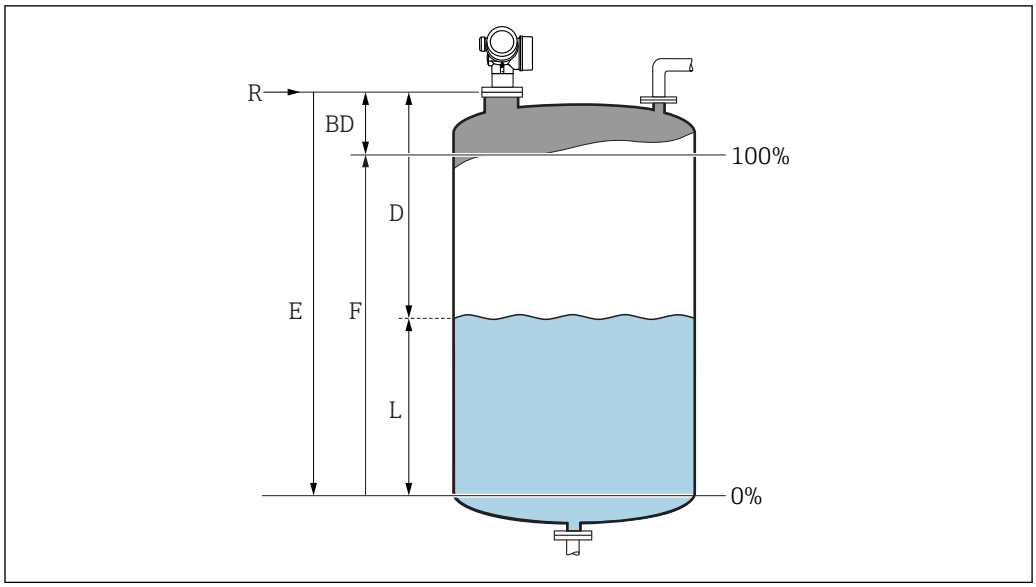

30 *Configuration parameters for level measurements in liquids*

R Reference point of the measurement
D Distance
L Level
E Empty calibration (= zero)
F Full calibration (= span)

1. Setup → Device tag
   ↳ Enter device tag.
2. Setup → Distance unit
   ↳ Select distance unit.
3. Setup → Tank type
   ↳ Select tank type.
4. Setup → Medium group
   ↳ Specify medium group ("Water based": ε_r >4 or "Others": ε_r >1,9).
5. Setup → Empty calibration
   ↳ Enter empty distance E (Distance from reference point R to the 0% level)
6. If the measuring range covers only an upper part of the tank or silo (E is much less-than the tank/silo height), it is mandatory to enter the acutal tank or silo height into the parameter. If there is an outlet cone, the tank or silo height should not be adjusted as usually E is not much less-than the tank/silo height in these applications.
   Setup → Advanced setup → Level → Tank/silo height
7. Setup → Full calibration
   ↳ Enter full distance F (Distance from the 0% to the 100% level).
8. Setup → Level
   ↳ Indicates the measrued level L.
9. Setup → Distance
   ↳ Indicates the measured distance from the reference point R to the level L.
10. Setup → Signal quality
    ↳ Indicates the quality of the evaluated level echo.

11. Setup → Mapping → Confirm distance
    ↳ Compare distance indicated on the display to real distance in order to start the recording of an interference echo map.
12. Setup → Advanced setup → Level → Level unit
    ↳ Select level unit: %, m, mm, ft, in (Factory setting: %)

The response time of the device is preset by the **"Tank type" parameter**. An enhanced setting is possible in the **"Advanced setup" submenu**.

12.4 Recording the reference curve

After the configuration of the measurement it is recommended to record the current envelope curve as a reference curve. The reference curve can be used later on in the process for diagnostic purposes. To record the reference curve use the **Save reference curve** parameter.

Navigation in the menu
Expert → Diagnostics → Envelope diagnostics → Save reference curve

Meaning of the options
- No
  No action
- Yes
  The current envelope curve is saved as reference curve.

The reference curve can only be displayed in the envelope curve diagram of FieldCare after it has been loaded from the device into FieldCare. This is performed by the "Load Reference Curve" function in FieldCare.



31 The "Load Reference Curve" function

12.5 Configuration of the on-site display

12.5.1 Factory settings of the on-site display

Parameter	Factory setting
Language	English
Value 1 display	Level linearized
Value 2 display	None
Value 3 display	None
Value 4 display	None

12.5.2 Adjustment of the on-site display

The on-site display can be adjusted in the following submenu:
Setup → Advanced setup → Display

12.6 Configuration of the current outputs

12.6.1 Factory setting of the current outputs

Current output	Allocated measuring vlaue	4 mA value	20 mA value
1	Level linearized	0% or the corresponding linearized value	100% or the corresponding linearized value
2 [1)]	Distance	0	Empty calibration

1) for devices with 2 current outputs

12.6.2 Adjustment of the current outputs

The current outputs can be adjusted in the following menus:

Basic settings
Setup → Advanced setup → Current output 1 to 2

Advanced settings
Expert → Output → Current output 1
See "Description of Device Parameters", GP01101F

12.7 Configuration management

After commissioning, you can save the current device configuration, copy it to another measuring point or restore the previous device configuration. You can do so using the **Configuration management** parameter and its options.

Navigation path in the operating menu
Setup → Advanced setup → Configuration backup display → Configuration management

Meaning of the options
- **Cancel**
  No action is executed and the user exits the parameter.
- **Execute backup**
  A backup copy of the current device configuration in the HistoROM (built-in in the device) is saved to the display module of the device. The backup copy comprises the transmitter and sensor data of the device.
- **Restore**
  The last backup copy of the device configuration is copied from the display module to the HistoROM of the device. The backup copy comprises the transmitter and sensor data of the device.
- **Duplicate**
  The transmitter configuration is duplicated to another device using the transmitter display module. The following parameters, which characterize the individual measuring point are **not** included in the transmitted configuration:
  – HART date code
  – HART short tag
  – HART message
  – HART descriptor
  – HART address
  – Device tag
  – Medium type
- **Compare**
  The device configuration saved in the display module is compared to the current device configuration of the HistoROM. The result of this comparison is displayed in the **Comparison result** parameter angezeigt.
- **Clear backup data**
  The backup copy of the device configuration is deleted from the display module of the device.

While this action is in progress, the configuration cannot be edited via the local display and a message on the processing status appears on the display.

If an existing backup is restored to a different device using the **Restore** option, it may occur that some device functionalities are no longer available. In some cases even a device reset will not restore the original status.

In order to transmit a configuration to a different device, the **Duplicate** option should always be used.

12.8 Protection of the settings against unauthorized changes

There are two ways to protect the settings against unauthorized changes:

- Via parameter settings (software locking) → 42
- Via locking switch (hardware locking) → 43

13 Diagnostics and troubleshooting

13.1 General trouble shooting

13.1.1 General errors

Error	Possible cause	Remedial action
Device does not respond.	Supply voltage does not match the value indicated on the nameplate.	Connect the correct voltage.
	The polarity of the supply voltage is wrong.	Correct the polarity.
	The cables do not contact the terminals properly.	Ensure electrical contact between the cable and the terminal.
Values on the display invisible	Contrast setting is too weak or too strong.	▪ Increase contrast by pressing ⊞ and Ⓔ simultaneously. ▪ Decrease contrast by pressing ⊟ and Ⓔ simultaneously.
	The plug of the display cable is not connected correctly.	Connect the plug correctly.
	Display is defective.	Replace display.
"Communication error" is indicated on the display when starting the device or connecting the display	Electromagnetic interference	Check grounding of the device.
	Broken display cable or display plug.	Replace display.
Duplicating of the parameters from one device to another via the display doesn't work. Only the "Save" and "Abort" options are available.	Display with backup is not recognized if no data backup has been performed at the device before.	Connect display (with the backup) and restart the device.
Output current <3.6 mA	Signal cable connection incorrect.	Check connection.
	Electronics is defective.	Replace electronics.
HART communication does not function.	Communication resistor missing or incorrectly installed.	Install the communication resistor(250 Ω) correctly.
	Commubox connected incorrectly.	Connect Commubox correctly.
	Commubox not switched to HART mode.	Set the selection switch of the Commubox to the HART position.
CDI communication does not work.	Wrong setting of the COM port on the computer.	Check the setting of the COM port on the computer and change it if necessary.
Device measures incorrectly.	Parametrization error	Check and adjust parameterization.
Device not accessible via SmartBlue	No Bluetooth connection	Enable Bluetooth function onsmartphone or tablet.
	Device already linked to another smartphone / tablet	Disconnect device from smartphone/tablet.
	Bluetooth module not connected.	Connect Bluetooth module (see SD02252F).
Login via SmartBlue not possible	Device is being put into operation for the first time	Enter initial password (ID of the Bluetooth module) and change.
Device cannot be operated via SmartBlue	Incorrect password entered	Enter correct password
	Password forgotten	Contact Endress+Hauser Service (www.addresses.endress.com)

13.1.2 Error - SmartBlue operation

Error	Possible cause	Solution
Device is not visible in the live list	No Bluetooth connection	Enable Bluetooth® function on smartphone or tablet
		Bluetooth® function of sensor disabled, perform recovery sequence
Device is not visible in the live list	The device is already connected with another smartphone/ tablet	Only **one** point-to-point connection is established between a sensor and a smartphone or tablet
Device is visible in the live list but cannot be accessed via SmartBlue	Android end device	Is the location function enabled for the app, was it approved the first time?
		GPS or positioning function must be activated for certain Android versions in conjunction with Bluetooth®
		Activate GPS - close the app fully and restart - enable the positioning function for the app
Device is visible in the live list but cannot be accessed via SmartBlue	Apple end device	Log in as standard Enter user name "admin" Enter initial password (ID of the Bluetooth module) paying attention to lower/upper case
Login via SmartBlue not possible	Device is being put into operation for the first time	Enter initial password (ID of the Bluetooth module) and change; paying attention to lower/upper case
Device cannot be operated via SmartBlue	Incorrect password entered	Enter correct password
Device cannot be operated via SmartBlue	Password forgotten	Contact the Endress+Hauser Service department (www.addresses.endress.com)

13.1.3 Parametrization errors

Error	Possible cause	Remdy
Measured value incorrect	If measured distance (Setup → Distance) matches the real distance: Calibration error	▪ Check and adjust **Empty calibration** parameter if necessary. ▪ Check and adjust **Full calibration** parameter if necessary. ▪ Check and adjust linearization if necessary (**Linearization** submenu).
	Level correction set incorrectly	Enter correct value in **Level correction** parameter.
	If measured distance (Setup → Distance) does not match the real distance: Interference echo	Carry out tank mapping (**Confirm distance** parameter).
No change of measured value on filling / emptying	Interference echo from installations, nozzle or build-up on the antenna.	▪ Carry out tank mapping (**Confirm distance** parameter). ▪ If necessary, clean antenna ▪ If necessary, selet better mopunting position
If the surface is not calm (e.g. filling, emptying, agitator running), the measured value jumps sporadically to a higher level	Signal is weakened by the rough surface - the interference echoes are sometimes stronger.	▪ Carry out tank mapping (**Confirm distance** parameter). ▪ Select **"Tank type" parameter** = **"Process vessel with agitator" option**. ▪ Increase integration time (Expert → Sensor → Distance → Integration time) ▪ Optimize orientation of the antenna ▪ If necessary, select a better mounting position and/or larger antenna.

Error	Possible cause	Remdy
During filling/emptying the measxured value jumps downwards	Multiple echoes	▪ Check **Tank type** parameter. ▪ If possible, do not select central installation position. ▪ If appropriate, use a stilling well.
Error message F941 or S941 "Echo lost"	Level echo is too weak.	▪ Check **Medium group** parameter. ▪ If necessary, select a more detailed setting in **Medium property** parameter. ▪ Optimize alignment of antenna ▪ If necessary, select a better installation position and/or larger antenna.
	Level echo suppressed.	Delete mapping and record it again.
Device displays a level when the tank is empty.	Interference echo	Carry out mapping over entire measuring range when the tank is empty (**Confirm distance** parameter).
Wrong slope of the level in the entire measuring range	Wrong tank type selected.	Set **Tank type** parameter correctly.

13.2 Diagnostic information on local display

13.2.1 Diagnostic message

Faults detected by the self-monitoring system of the measuring device are displayed as a diagnostic message in alternation with the measured value display.

Measured value display in alarm condition	Diagnostic message

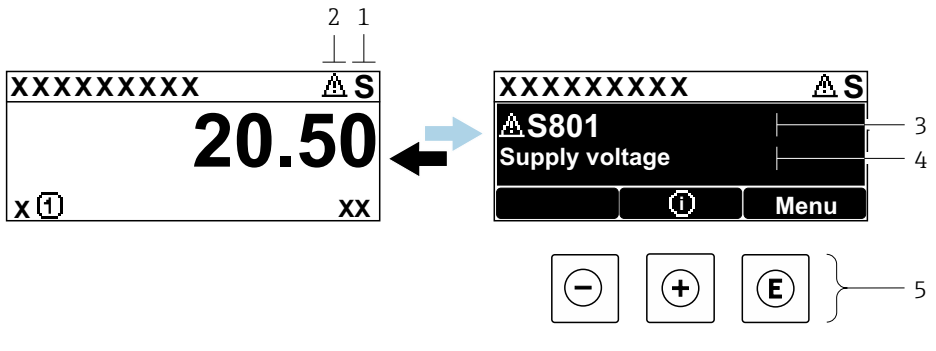

1 *Status signal*
2 *Status symbol (symbol for event level))*
3 *Status symbol with diagnostics event*
4 *Event text*
5 *Operating elements*

Status signals

F A0032902	**"Failure (F)" option** A device error is present. The measured value is no longer valid.
C A0032903	**"Function check (C)" option** The device is in service mode (e.g. during a simulation).
S A0032904	**"Out of specification (S)" option** The device is operated: ▪ Outside of its technical specifications (e.g. during startup or a cleaning) ▪ Outside of the configuration carried out by the user (e.g. level outside configured span)
M A0032905	**"Maintenance required (M)" option** Maintenance is required. The measured value is still valid.

Status symbol (symbol for event level)

⊗	**"Alarm" status** The measurement is interrupted. The signal outputs take on the defined alarm condition. A diagnostic message is generated.
⚠	**"Warning" status** The device continues to measure. A diagnostic message is generated.

Diagnostics event and event text

The fault can be identified using the diagnostics event. The event text helps you by providing information about the fault. In addition, the corresponding symbol is displayed before the diagnostics event.

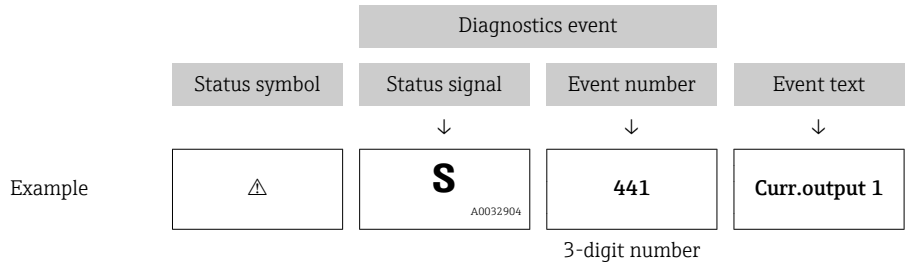

If two or more diagnostic messages are pending simultaneously, only the message with the highest priority is shown. Additional pending diagnostic messages can be shown in the **Diagnostic list** submenu.

Past diagnostic messages that are no longer pending are shown as follows:
- On the local display:
  in the **Event logbook** submenu
- In FieldCare:
  via the "Event List /HistoROM" function.

Operating elements

Operating functions in menu, submenu	
⊞	**Plus key** Opens the message about the remedial measures.
Ⓔ	**Enter key** Opens the operating menu.

13.2.2 Calling up remedial measures

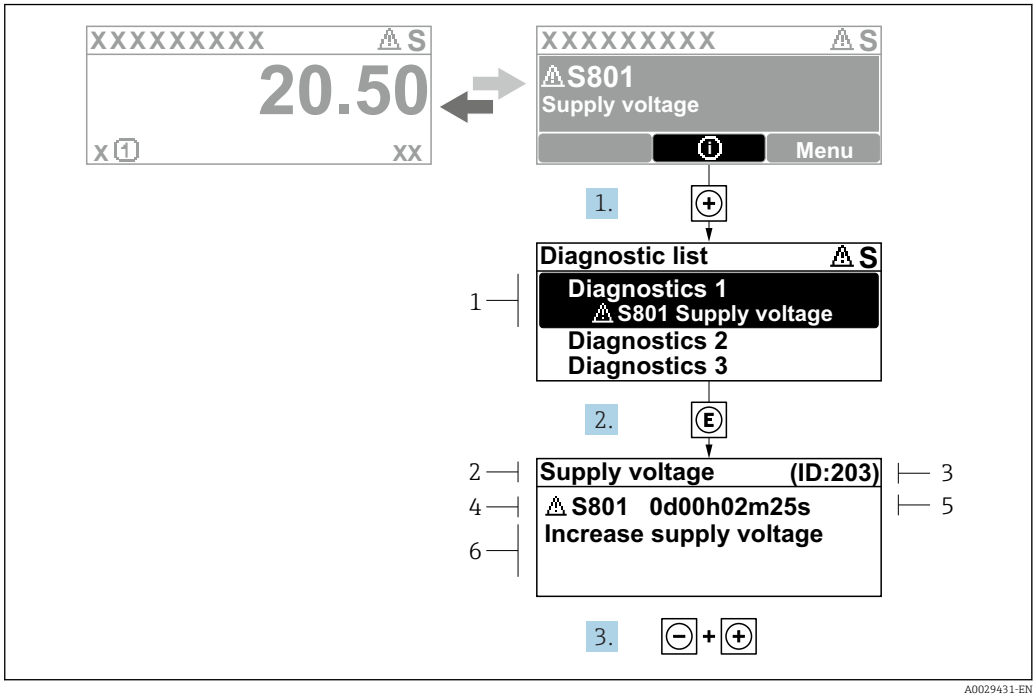

32 *Message for remedial measures*

1 *Diagnostic information*
2 *Short text*
3 *Service ID*
4 *Diagnostic behavior with diagnostic code*
5 *Operation time of occurrence*
6 *Remedial measures*

The user is in the diagnostic message.

1. Press ⊞ (ⓘ-Symbol).
   ↳ **Diagnostic list** submenu opens.
2. Select the desired diagnostic event with ⊞ or ⊟ and press Ⓔ.
   ↳ The message for the remedial measures for the selected diagnostic event opens.
3. Press ⊟ + ⊞ simultaneously.
   ↳ The message for the remedial measures closes.

The user is in the **Diagnostics** menu at an entry for a diagnostics event, e.g. in **Diagnostic list** submenu or in **Previous diagnostics**.

1. Press Ⓔ.
   ↳ The message for the remedial measures for the selected diagnostic event opens.
2. Press ⊟ + ⊞ simultaneously.
   ↳ The message for the remedial measures closes.

13.3 Diagnostic event in the operating tool

If a diagnostic event is present in the device, the status signal appears in the top left status in the operating tool along with the corresponding symbol for event level in accordance with NAMUR NE 107:

- Failure (F)
- Function check (C)
- Out of specification (S)
- Maintenance required (M)

A: Via the operating menu

1. Navigate to the **Diagnostics** menu.
   ↳ In the **Actual diagnostics** parameter, the diagnostic event is shown with event text.
2. On the right in the display range, hover the cursor over the **Actual diagnostics** parameter.
   ↳

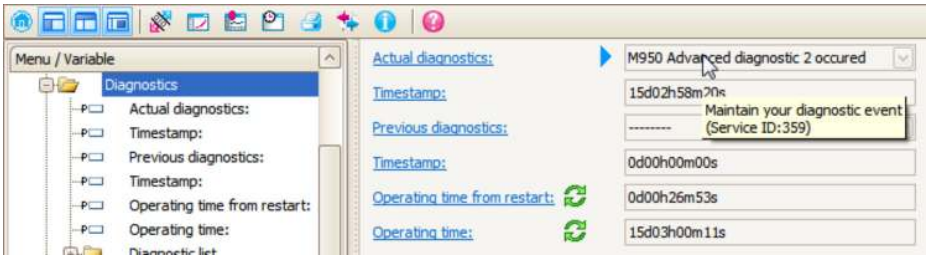

A tool tip with remedial measures for the diagnostic event appears.

B: Via the "Create documentation" function

1.

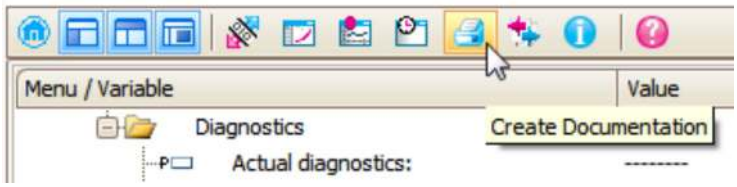

Select the "Create documentation" function.

2.

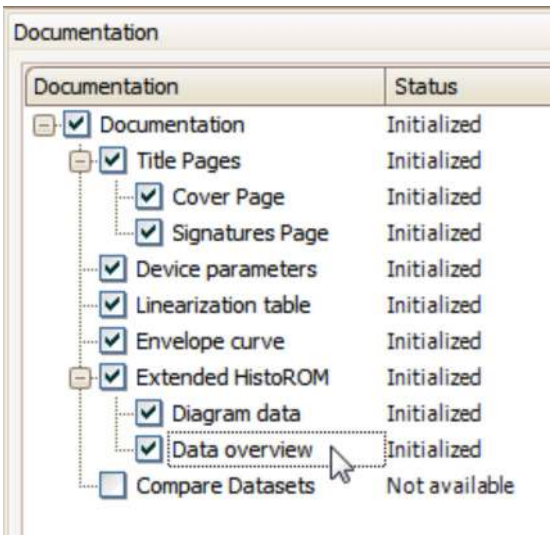

Make sure "Data overview" is marked.

3. Click "Save as ..." and save a PDF of the protocol.
   ↳ The protocol contains the diagnostic messages and remedy information.

C: Via the "Eventlist / Extended HistoROM" function

1. 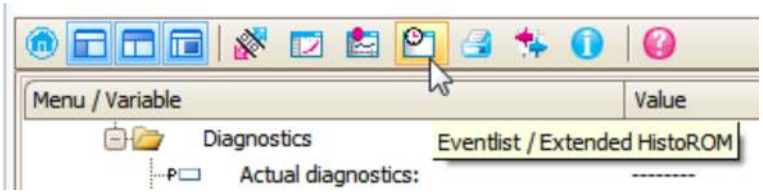

   Select the "Eventlist / Extended HistoROM" function.

2. 

   Select the "Load Eventlist" function.
   ↳ The list of events, including remedy information, is shown in the "Data overview" window.

13.4 Diagnostic list

In the **Diagnostic list** submenu submenu, up to 5 currently pending diagnostic messages can be displayed. If more than 5 messages are pending, the messages with the highest priority are shown on the display.

Navigation path
Diagnostics → Diagnostic list

Calling up and closing the remedial measures

1. Press ⓔ.
   ↳ The message for the remedial measures for the selected diagnostic event opens.
2. Press ⊟ + ⊞ simultaneously.
   ↳ The message about the remedial measures closes.

13.5 Overview of diagnostic events

Diagnostic number	Short text	Remedy instructions	Status signal [from the factory]	Diagnostic behavior [from the factory]
Diagnostic of sensor				
046	Build-up detected	Clean sensor	F	Alarm [1)]
102	Sensor incompatible error	1. Restart device 2. Contact service	F	Alarm
151	Sensor electronic failure	Replace sensor electronic module	F	Alarm
Diagnostic of electronic				
242	Software incompatible	1. Check software 2. Flash or change main electronics module	F	Alarm
252	Modules incompatible	1. Check electronic modules 2. Change I/O or main electronic module	F	Alarm
261	Electronic modules	1. Restart device 2. Check electronic modules 3. Change I/O Modul or main electronics	F	Alarm
262	Module connection	1. Check module connections 2. Change electronic modules	F	Alarm
270	Main electronic failure	Change main electronic module	F	Alarm
271	Main electronic failure	1. Restart device 2. Change main electronic module	F	Alarm
272	Main electronic failure	1. Restart device 2. Contact service	F	Alarm
273	Main electronic failure	1. Emergency operation via display 2. Change main electronics	F	Alarm
275	I/O module defective	Change I/O module	F	Alarm
276	I/O module faulty	1. Restart device 2. Change I/O module	F	Alarm
276	I/O module failure		F	Alarm
282	Data storage	1. Restart device 2. Contact service	F	Alarm
283	Memory content	1. Transfer data or reset device 2. Contact service	F	Alarm
311	Electronic failure	Maintenance required! 1. Do not perform reset 2. Contact service	M	Warning
Diagnostic of configuration				
410	Data transfer	1. Check connection 2. Retry data transfer	F	Alarm
411	Up-/download active	Up-/download active, please wait	C	Warning
412	Processing download	Download active, please wait	C	Warning
431	Trim 1 to 2	Carry out trim	C	Warning
435	Linearization	Check linearization table	F	Alarm
437	Configuration incompatible	1. Restart device 2. Contact service	F	Alarm

Diagnostic number	Short text	Remedy instructions	Status signal [from the factory]	Diagnostic behavior [from the factory]
438	Dataset	1. Check data set file 2. Check device configuration 3. Up- and download new configuration	M	Warning
441	Current output 1 to 2	1. Check process 2. Check current output settings	S	Warning
484	Failure mode simulation	Deactivate simulation	C	Alarm
485	Simulation measured value	Deactivate simulation	C	Warning
491	Current output 1 to 2 simulation	Deactivate simulation	C	Warning
494	Switch output simulation	Deactivate simulation switch output	C	Warning
495	Diagnostic event simulation	Deactivate simulation	C	Warning
585	Simulation distance	Deactivate simulation	C	Warning
586	Record map	Recording of mapping please wait	C	Warning
Diagnostic of process				
801	Energy too low	Increase supply voltage	S	Warning
803	Current loop	1. Check wiring 2. Change I/O module	F	Alarm
825	Operating temperature	1. Check ambient temperature 2. Check process temperature	S	Warning
825	Operating temperature		F	Alarm
921	Change of reference	1. Check reference configuration 2. Check pressure 3. Check sensor	S	Warning
941	Echo lost	Check parameter 'DC value'	S	Warning [1]
942	In safety distance	1. Check level 2. Check safety distance 3. Reset self holding	S	Alarm [1]
943	In blocking distance	Reduced accuracy Check level	S	Warning
950	Advanced diagnostic 1 to 4 occured	Maintain your diagnostic event	M	Warning [1]
952	Foam detected	Check process conditions	F	Alarm [1]

1) Diagnostic behavior can be changed.

13.6 Event logbook

13.6.1 Event history

A chronological overview of the event messages that have occurred is provided in the **Event list** submenu [2].

2) This submenu is only available for operation via local display. In the case of operation via FieldCare, the event list can be displayed with the "Event List / HistoROM" functionality of FieldCare.

Navigation path
Diagnostics → Event logbook → Event list

A maximum of 100 event messages can be displayed in chronological order.

Die Ereignishistorie umfasst Einträge zu:
- Diagnostic events
- Information events

In addition to the operation time of its occurrence, each event is also assigned a symbol that indicates whether the event has occurred or is ended:
- Diagnostic event
  - : Event has occurred
  - : Event has ended
- Information event
  : Event has occurred

Calling up and closing the remedial measures

1. Press E
   ↳ The message for the remedial measures for the selected diagnostic event opens.
2. Press − + + simultaneously.
   ↳ The message about the remedial measures closes.

13.6.2 Filtering the event logbook

Using the **Filter options** parameter, you can define which category of event messages is displayed in the **Event list** submenu.

Navigation path
Diagnostics → Event logbook → Filter options

Filter categories
- All
- Failure (F)
- Function check (C)
- Out of specification (S)
- Maintenance required (M)
- Information

13.6.3 Overview of information events

Info number	Info name
I1000	--------(Device ok)
I1089	Power on
I1090	Configuration reset
I1091	Configuration changed
I1092	Embedded HistoROM deleted
I1110	Write protection switch changed
I1137	Electronic changed
I1151	History reset
I1154	Reset terminal voltage min/max
I1155	Reset electronic temperature
I1156	Memory error trend
I1157	Memory error event list

Info number	Info name
I1184	Display connected
I1185	Display backup done
I1186	Restore via display done
I1187	Settings downloaded with display
I1188	Display data cleared
I1189	Backup compared
I1256	Display: access status changed
I1264	Safety sequence aborted
I1335	Firmware changed
I1397	Fieldbus: access status changed
I1398	CDI: access status changed
I1512	Download started
I1513	Download finished
I1514	Upload started
I1515	Upload finished
I1554	Safety sequence started
I1555	Safety sequence confirmed
I1556	Safety mode off

13.7 Firmware history

Date	Firmware version	Modifications	Documentation (FMR60, HART)	
			Operating Instructions	Description of Parameters
01.2017	01.00.zz	Original software	BA01618F/00/EN/01.17 [1] BA01618F/00/EN/02.18 [2]	GP01101F/00/EN/01.17

1) Contains information on the Heartbeat wizards which are available in the latest DTM version for DeviceCare and FieldCare.
2) Contains information on the Bluetooth interface.

The firmware version can explicitly be ordered via the product structure. In this way it is possible to ensure compatibility of the firmware version with an existing or planned system integration.

14 Maintenance

The measuring device requires no special maintenance.

14.1 Exterior cleaning

When exterior-cleaning the device, always use cleaning agents that do not attack the surface of the hosuing and the seals.

14.2 Replacing seals

The process seals of the sensors (at the process connection) must be replaced periodically, particularly if molded seals (aseptic construction) are used. The period between changes depends on the frequency of cleaning cycles and on the temperature of the measured substance and the cleaning temperature.

15 Repairs

15.1 General information on repairs

15.1.1 Repair concept

The Endress+Hauser repair concept assumes that the devices have a modular design and that repairs can be done by the Endress+Hauser service or specially trained customers.

Spare parts are contained in suitable kits. They contain the related replacement instructions.

For more information on service and spare parts, contact the Service Department at Endress+Hauser.

15.1.2 Repairs to Ex-approved devices

When carrying out repairs to Ex-approved devices, please note the following:

- Repairs to Ex-approved devices may only be carried out by trained personnel or by the Endress+Hauser Service.
- Comply with the prevailing standards, national Ex-area regulations, safety instructions (XA) and certificates.
- Only use original spare parts from Endress+Hauser.
- When ordering a spare part, please note the device designation on the nameplate. Only replace parts with identical parts.
- Carry out repairs according to the instructions. On completion of repairs, carry out the specified routine test on the device.
- Only Endress+Hauser Service may convert a certified device into a different certified variant.
- Document all repair work and conversions.

15.1.3 Replacement of an electronics module

If an electronics module has been replaced, it is not necessary to perform a new basic setup as the calibration parameters are stored in the HistoROM which is located in the housing. However, after exchanging the main electronics module it may be necessary to record a new mapping (interference echo suppression).

15.1.4 Replacement of a device

After a complete device or electronic module has been replaced, the parameters can be downloaded into the instrument again in one of the following ways:

- Via the display module
  Condition: The configuration of the old device has been saved in the display module → 155.
- Via FieldCare
  Condition: The configuration of the old device has been saved to the computer via FieldCare.

You can continue to measure without carrying out a new setup. Only a linearization and a tank map (interference echo suppression) have to be recorded again.

15.2 Spare parts

- A few interchangeable measuring device components are identified by a spare part nameplate. This contains information about the spare part.
- The connection compartment cover of the device contains a spare part nameplate that includes the following information:
  - A list of the most important spare parts for the measuring device, including their ordering information.
  - The URL for the *W@M Device Viewer* (www.endress.com/deviceviewer): There, all spare parts for the measuring device are listed, including the order code, and can be ordered. If available, the corresponding Installation Instructions can also be downloaded there.

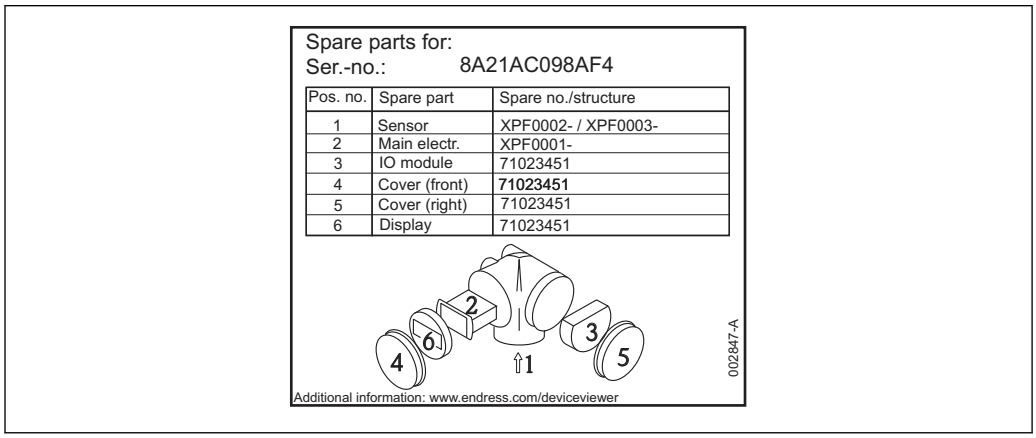

33 *Example for spare part nameplate in connection compartment cover*

Measuring device serial number:
- Is located on the device and spare part nameplate.
- Can be read out via the "Serial number" parameter in the "Device information" submenu.

15.3 Return

The measuring device must be returned if it is need of repair or a factory calibration, or if the wrong measuring device has been delivered or ordered. Legal specifications require Endress+Hauser, as an ISO-certified company, to follow certain procedures when handling products that are in contact with the medium.

To ensure safe, swift and professional device returns, please refer to the procedure and conditions for returning devices provided on the Endress+Hauser website at http://www.endress.com/support/return-material

15.4 Disposal

Observe the following notes during disposal:
- Observe valid federal/national regulations.
- Ensure proper separation and reuse of the device components.

16 Accessories

16.1 Device-specific accessories

16.1.1 Weather protection cover

Accessory	Description
Weather protection cover	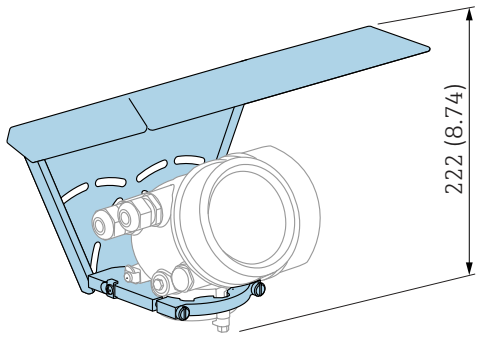 A0015466 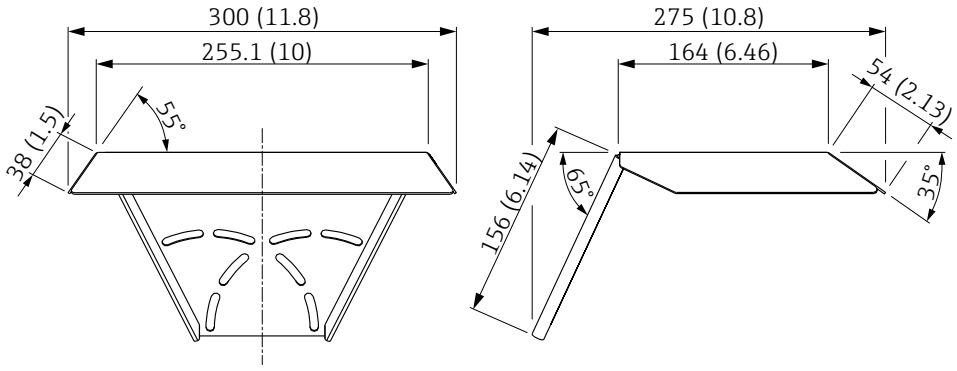 A0015472 *34 Weather protection cover; Dimensions: mm (in)* The weather protection cover can be ordered together with the device (product structure, feature 620 "Accessory Enclosed", option PB "Weather Protection Cover"). Alternatively, it can be separately ordered as an accessory; order code 71162242.

16.1.2 Mounting bracket adjustable

Accessories	Description
Mounting bracket adjustable	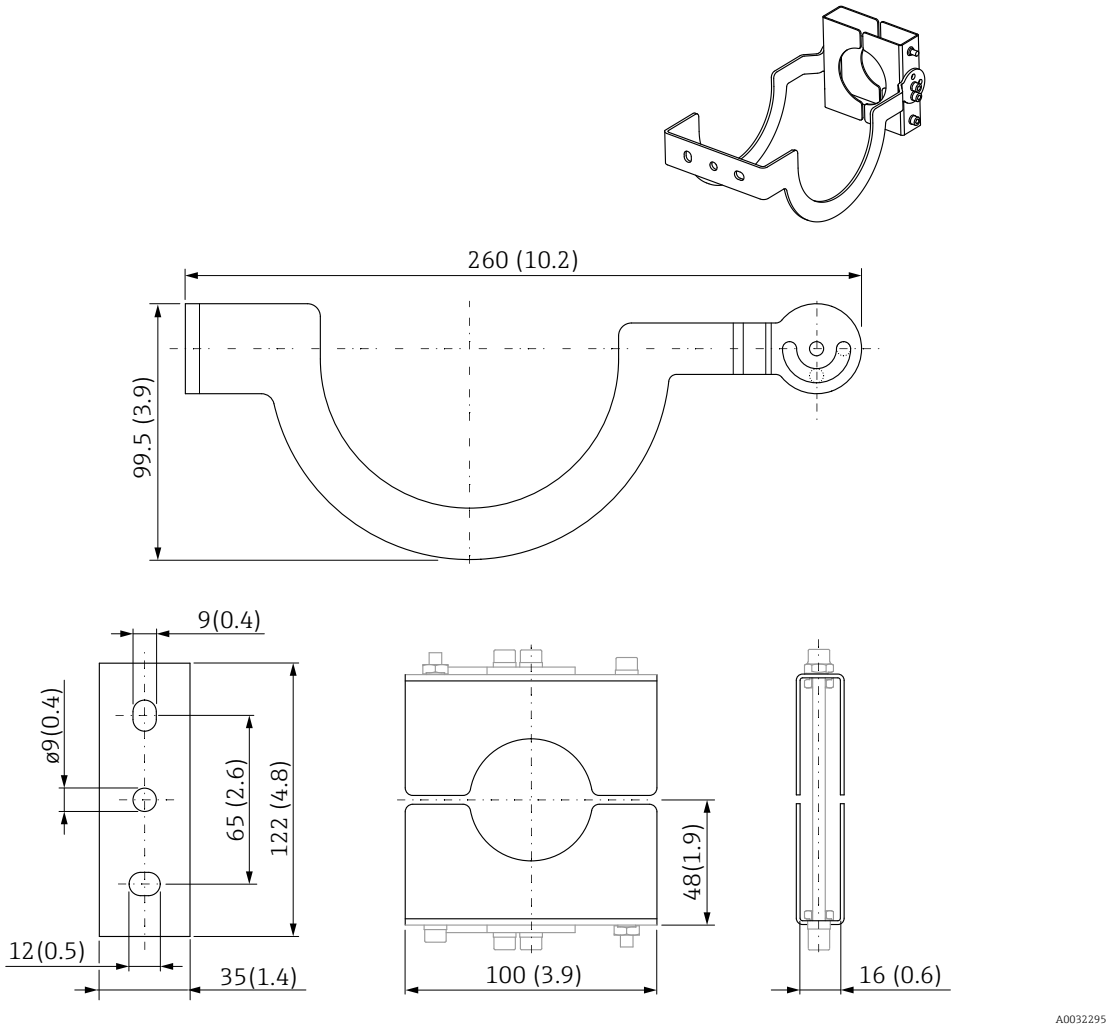 **Material:** 304 (1.4301) **Suitable for housing** [1]: – A: GT19 dual compartment, plastic PBT – C: GT20 dual compartment, Alu, coated **Suitable for antenna** [2]: GA: Drip-off, PTFE DN50 **Suitable for process connection** [3]: – GGJ: thread ISO228 G1-1/2, 316L – RGJ: thread ANSI MNPT1-1/2, 316L **Order number:** 71336522 ▪ There is **no** conductive connection between the mounting bracket and the transmitter housing. ▪ Risk of electrostatic charge. ▪ Integrate the mounting bracket in the local potential equalization system. ▪ Only to be fastened at stable materials (e.g. metal, brick, concrete) using suitable fastening material (to be supplied by customer).

1) Feature 040 in the product structure
2) Feature 070 in the product structure
3) Feature 100 in the product structure

16.1.3 Remote display FHX50

Accessories	Description
Remote display FHX50	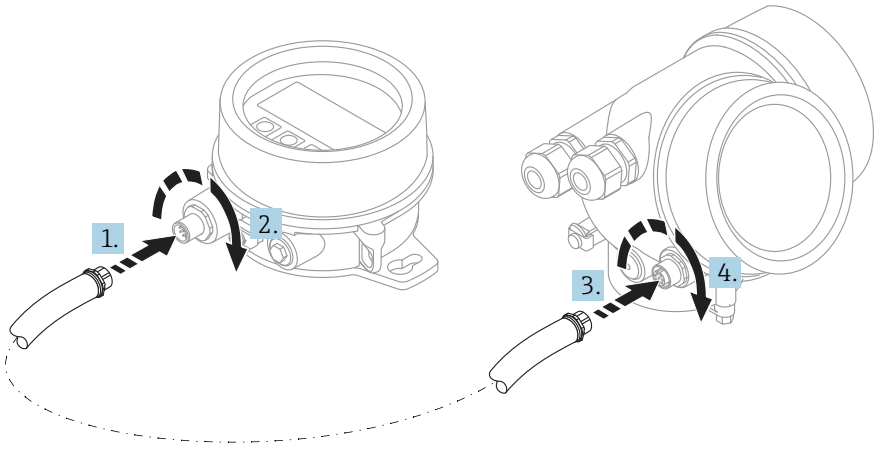 A0019128 ▪ Material: – Plastic PBT – 316L/1.4404 – Aluminum ▪ Degree of protection: IP68 / NEMA 6P and IP66 / NEMA 4x ▪ Suitable for display modules: – SD02 (push buttons) – SD03 (touch control) ▪ Connecting cable: – Cable supplied with device up to 30 m (98 ft) – Standard cable supplied by customer up to 60 m (196 ft) ▪ Ambient temperature range: −40 to 80 °C (−40 to 176 °F) ▪ Ambient temperature range (option): −50 to 80 °C (−58 to 176 °F) [1] ▪ If the remote display should be used, order the device version "Prepared for display FHX50" (feature 030, version L, M or N). For the FHX50, you must select option A: "Prepared for display FHX50" under feature 050 "Measuring device version". ▪ If the device version "Prepared for display FHX50" was not originally ordered and a FHX50 display is to be retrofitted, you must select version B "Not prepared for display FHX50" under feature 050: "Measuring device version" when ordering the FHX50. In this case, a retrofit kit for the device is supplied with the FHX50. The kit can be used to prepare the device so that the FHX50 can be used. Use of the FHX50 may be restricted for transmitters with an approval. A device can only be retrofitted with the FHX50 if the option L, M or N ("Prepared for FHX50") is listed under *Basic specifications*, item 4 "Display, operation" in the Safety Instructions (XA) for the device. Also pay attention to the Safety Instructions (XA) of the FHX50. Retrofitting is not possible on transmitters with: ▪ An approval for use in areas with flammable dust (dust ignition-proof approval) ▪ Ex nA type of protection For details, see document SD01007F.

1) This range is valid if option JN "Ambient temperature transmitter −50 °C (−58 °F)" has been selected in ordering feature 580 "Test, Certificate". If the temperature is permanently below −40 °C (−40 °F), failure rates may be increased.

16.1.4 Overvoltage protection

Accessory	Description
Overvoltage protection for 2-wire-devices OVP10 (1 channel) OVP20 (2 channel)	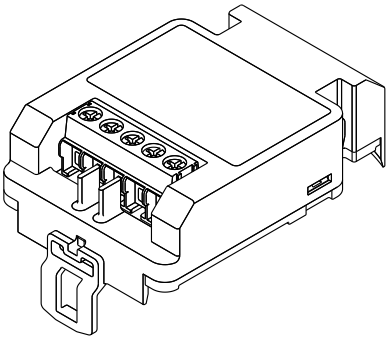 A0021734 **Technical data** ▪ Resistance per channel: 2 * 0.5 Ω_{max} ▪ Threshold DC voltage: 400 to 700 V ▪ Threshold impulse voltage: < 800 V ▪ Capacitance at 1 MHz: < 1.5 pF ▪ Nominal arrest impulse voltage (8/20 µs): 10 kA ▪ Suited for wire cross-sections: 0.2 to 2.5 mm² (24 to 14 AWG) **Ordering with device** The overvoltage protection module is preferably ordered with the device. See product structure, feature 610 "Accessory mounted", option NA "Overvoltage protection". Separate ordering of the module is only necessary if a device is to retrofitted with the overvoltage protection. **Order code for retrofitting** ▪ For 1-channel devices (feature 020, option A) OVP10: 71128617 ▪ For 2-channel devices (feature 020, option B, C, E or G) OVP20 : 71128619 **Hosuing lid for retrofitting** In order to keep the necessary safety distances, the housing lid needs to be replaced if the device is retrofitted with the overvoltage protection. Depending on the housing type, the order code of the suitable lid is as follows: ▪ GT18 housing: Lid 71185516 ▪ GT19 housing: Lid 71185518 ▪ GT20 housing: Lid 71185516 **Restrictions for retrofitting** Depending on the approval of the transmitter the usage of the OVP module may be restricted. A device may only be retrofitted with an OVP module if the option *NA* (overvoltage protection) is quoted unter *Optional Specifications* in the Safety Instructions (XA) pertaining to the device. For details refer to SD01090F.

16.1.5 Gas-tight feedthrough

Accessories	Description
Gas-tight feedthrough	Chemically inert glass feedthrough; prevents gases from entering the electronics housing To order with the device: product structure, feature 610 "Accessory mounted", option NC "Gas-tight feedthrough"

16.1.6 Bluetooth module for HART devices

Accessory	Description
Bluetooth module	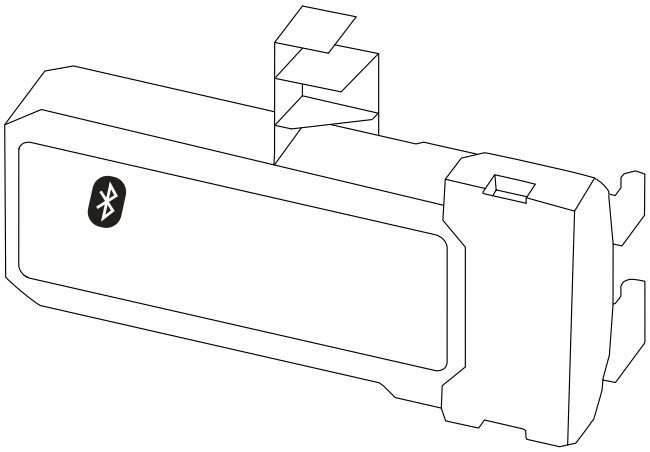 A0036493 ▪ Quick and easy commissioning via SmartBlue (app) ▪ No additional tools or adapters required ▪ Signal curve via SmartBlue (app) ▪ Encrypted single point-to-point data transmission (tested by Fraunhofer institue) and password protected communication via Bluetooth® wireless technology ▪ Range under reference conditions: > 10 m (33 ft) When using the Bluetooth module the minimum supply voltage increases by up to 3 V. **Ordering with device** The Bluetooth module is preferably ordered with the device. See product structure, feature 610 "Accessory Mounted", option NF "Bluetooth". A separate order is only necessary in case of retrofitting. **Order code for retrofitting** Bluetooth module (BT10): 71377355 **Restrictions in case of retrofitting** Depending on the approval of the transmitter, application of the Bluetooth module may be restricted. A device may only be retrofitted with a Bluetooth module if the option *NF* (Bluetooth) is listed in the associated Safety Instructions (XA) under *Optional specifications*. For details refer to SD02252F.

16.2 Communication-specific accessories

Accessory	Description
Commubox FXA195 HART	For intrinsically safe HART communication with FieldCare via the USB interface. For details refer to Technical Information TI00404F

Accessory	Description
Commubox FXA291	Connects Endress+Hauser field devices with CDI interface (= Endress+Hauser Common Data Interface) to the USB interface of a computer. Order code: 51516983 For details refer to Technical Information TI00405C

Accessory	Description
HART Loop Converter HMX50	Evaluates the dynamic HART variables and converts them to analog current signals or limit values. Order code: 71063562 For details refer to Technical Information TI00429F and Operating Instructions BA00371F

Accessory	Description
WirelessHART Adapter SWA70	Connects field devices to a WirelessHART network. The WirelessHART adapter can be mounted directly at a HART device and is easly integrated into an existing HART network. It ensures safe data transmission and can be operated in parallel with other wireless networks. For details refer to Operating Instructions BA00061S

Accessories	Description
Connect Sensor FXA30/FXA30B	Fully integrated, battery-powered gateway for simple applications with SupplyCare Hosting. Up to 4 field devices with 4 to 20 mA communication (FXA30/FXA30B), serial Modbus (FXA30B) or HART (FXA30B) can be connected. With its robust design and ability to run for years on the battery, it is ideal for remote monitoring in isolated locations. Version with LTE (USA, Canada and Mexico only) or 3G mobile transmission for worldwide communication. For details, see "Technical Information" TI01356S and Operating Instructions BA01710S.

Accessories	Description
Fieldgate FXA42	Fieldgates enable communication between connected 4 to 20 mA, Modbus RS485 and Modbus TCP devices and SupplyCare Hosting or SupplyCare Enterprise. The signals are transmitted either via Ethernet TCP/IP, WLAN or mobile communications (UMTS). Advanced automation capabilities are available, such as an integrated Web-PLC, OpenVPN and other functions. For details, see "Technical Information" TI01297S and Operating Instructions BA01778S.

Accessories	Description
SupplyCare Enterprise SCE30B	Inventory management software that visualizes levels, volumes, masses, temperatures, pressures, densities or other tank parameters. The parameters are recorded and transmitted by means of gateways of the type Fieldgate FXA42. This Web-based software is installed on a local server and can also be visualized and operated with mobile terminals such as a smartphone or tablet. For details, see "Technical Information" TI01228S and Operating Instructions BA00055S

Accessories	Description
SupplyCare Hosting SCH30	Inventory management software that visualizes levels, volumes, masses, temperatures, pressures, densities or other tank parameters. The parameters are recorded and transmitted by means of gateways of the type Fieldgate FXA42, FXA30 and FXA30B. SupplyCare Hosting is offered as a hosting service (Software as a Service, SaaS). In the Endress+Hauser portal, the user is provided with the data over the Internet. For details, see "Technical Information" TI01229S and Operating Instructions BA00050S.

Accessory	Description
Field Xpert SFX350	Field Xpert SFX350 is a mobile computer for commissioning and maintenance. It enables efficient device configuration and diagnostics for HART and FOUNDATION fieldbus devices in the **non-Ex area**. For details, see Operating Instructions BA01202S

Accessory	Description
Field Xpert SFX370	Field Xpert SFX370 is a mobile computer for commissioning and maintenance. It enables efficient device configuration and diagnostics for HART and FOUNDATION fieldbus devices in the **non-Ex area** and the **Ex area**. For details, see Operating Instructions BA01202S

16.3 Service-specific accessories

Accessory	Description
DeviceCare SFE100	Configuration tool for HART, PROFIBUS and FOUNDATION Fieldbus devices Technical Information TI01134S ▪ DeviceCare is available for download at www.software-products.endress.com. The download requires a registration in the Endress+Hauser software portal. ▪ Alternatively, a DeviceCare DVD can be ordered with the device. Product structure: Feature 570 "Service", Option IV "Tooling DVD (DeviceCare Setup)".
FieldCare SFE500	FDT-based Plant Asset Management tool. Helps to configure and maintain all field devices of your plant. By supplying status information it also supports the diagnosis of the devices. Technical Information TI00028S

16.4 System components

Accessory	Description
Graphic Data Manager Memograph M	The graphic data manager Memograph M provides information on all the relevant process variables. Measured values are recorded correctly, limit values are monitored and measuring points analyzed. The data are stored in the 256 MB internal memory and also on an SD card or USB stick. For details refer to Technical Information TI00133R and Operating Instructions BA00247R
RN221N	Active barrier with power supply for safe separation of 4 to 20 mA current circuits. Provides bi-directional HART transmission. For details refer to Technical Information TI00073R and Operating Instructions BA00202R
RNS221	Transmitter supply for 2-wire sensors or transmitters exclusively for non-Ex areas. Provides bi-directional communication using the HART communication sockets. For details refer to Technical Information TI00081R and Operating Instructions KA00110R

17 Operating menu

17.1 Ovwerview of the operating menu (SmartBlue)

Navigation Operating menu

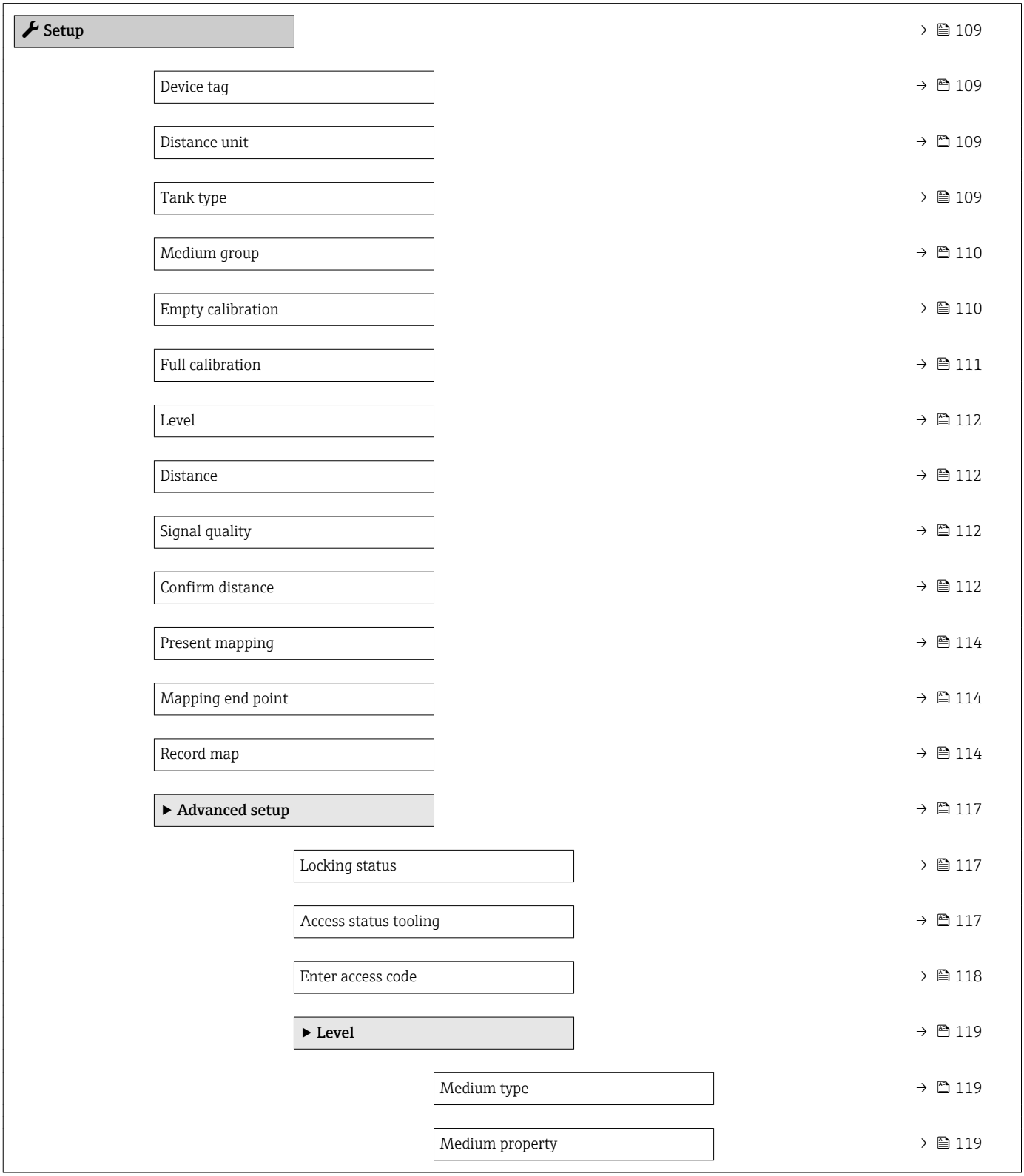

Max. filling speed liquid	→ 120
Max. draining speed liquid	→ 120
Level unit	→ 121
Blocking distance	→ 122
Level correction	→ 122
Tank/silo height	→ 122
▶ **Linearization**	→ 125
Linearization type	→ 127
Unit after linearization	→ 128
Free text	→ 129
Level linearized	→ 129
Maximum value	→ 130
Diameter	→ 130
Intermediate height	→ 130
Table mode	→ 131
Table number	→ 132
Level	→ 132
Level	→ 133
Customer value	→ 133
Activate table	→ 133
▶ **Safety settings**	→ 134
Output echo lost	→ 134
Value echo lost	→ 134
Ramp at echo lost	→ 135
Blocking distance	→ 122

▶ **Current output 1 to 2** → 139

Assign current output → 139

Current span → 140

Fixed current → 140

Damping output → 141

Failure mode → 141

Failure current → 142

Output current 1 to 2 → 142

▶ **Switch output** → 143

Switch output function → 143

Assign status → 144

Assign limit → 144

Assign diagnostic behavior → 144

Switch-on value → 145

Switch-on delay → 146

Switch-off value → 146

Switch-off delay → 147

Failure mode → 147

Switch status → 147

Invert output signal → 147

Diagnostics → 161

Actual diagnostics → 161

Timestamp → 161

Previous diagnostics → 161

Timestamp → 162

- Operating time from restart → 162
- Operating time → 155
- ▶ **Diagnostic list** → 163
  - Diagnostics 1 to 5 → 163
  - Timestamp → 163
- ▶ **Device information** → 165
  - Device tag → 165
  - Serial number → 165
  - Firmware version → 165
  - Device name → 165
  - Order code → 166
  - Extended order code 1 to 3 → 166
  - Device revision → 166
  - Device ID → 166
  - Device type → 167
  - Manufacturer ID → 167
- ▶ **Measured values** → 168
  - Distance → 168
  - Level linearized → 129
  - Output current 1 to 2 → 142
  - Measured current 1 → 169
  - Terminal voltage 1 → 169
  - Sensor temperature → 169
- ▶ **Simulation** → 174
  - Assign measurement variable → 175

	Process variable value	→ 175
	Current output 1 to 2 simulation	→ 175
	Value current output 1 to 2	→ 176
	Switch output simulation	→ 176
	Switch status	→ 176
	Device alarm simulation	→ 177
	Diagnostic event simulation	→ 177

17.2 Overview of the operating menu (display module)

Navigation Operating menu

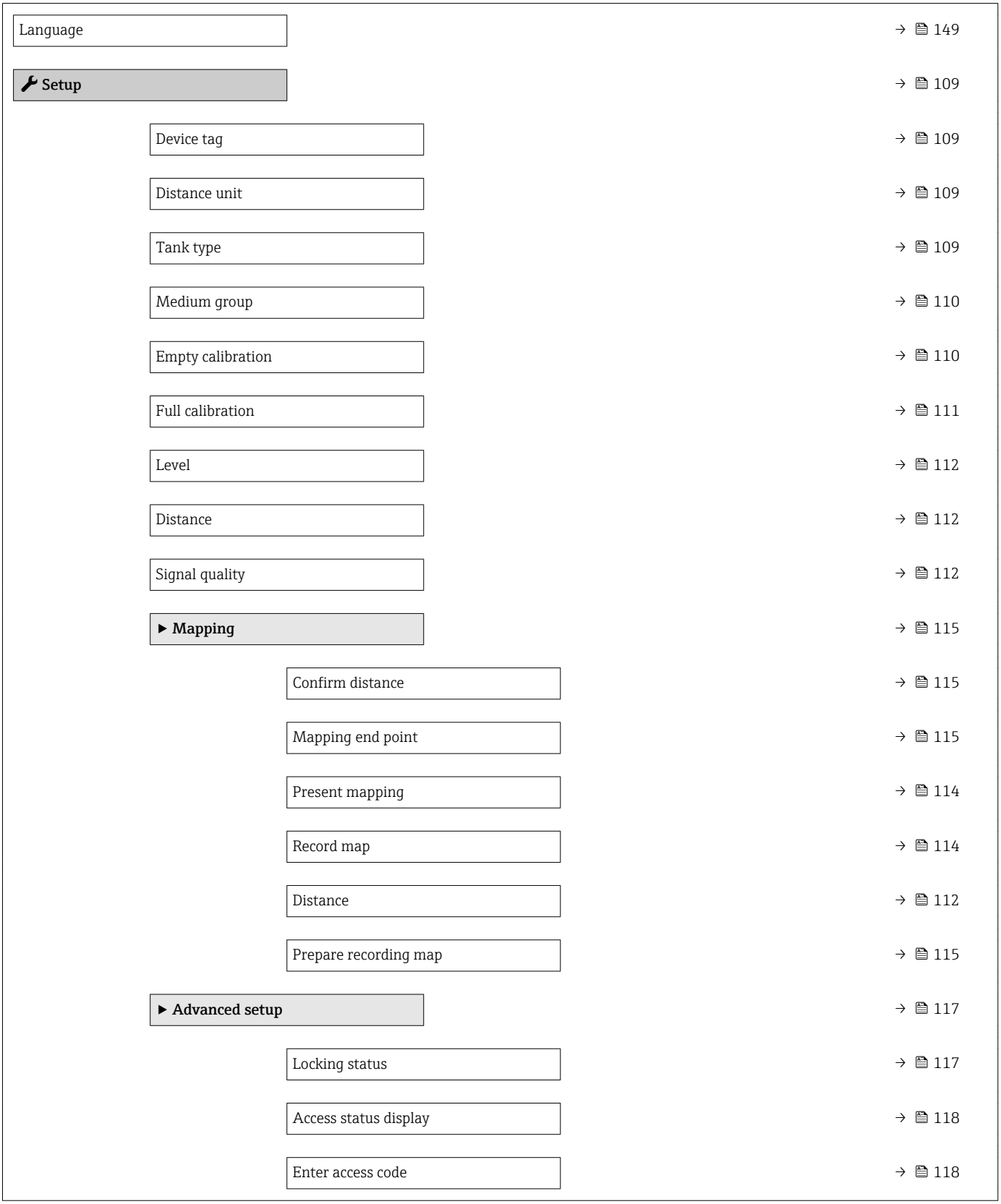

- ▶ **Level** → 119
  - Medium type → 119
  - Medium property → 119
  - Max. filling speed liquid → 120
  - Max. draining speed liquid → 120
  - Level unit → 121
  - Blocking distance → 122
  - Level correction → 122
  - Tank/silo height → 122
- ▶ **Linearization** → 125
  - Linearization type → 127
  - Unit after linearization → 128
  - Free text → 129
  - Maximum value → 130
  - Diameter → 130
  - Intermediate height → 130
  - Table mode → 131
  - ▶ **Edit table**
    - Level → 132
    - Customer value → 133
  - Activate table → 133
- ▶ **Safety settings** → 134
  - Output echo lost → 134
  - Value echo lost → 134

Ramp at echo lost	→ 135
Blocking distance	→ 122
▶ **SIL/WHG confirmation**	→ 137
▶ **Deactivate SIL/WHG**	→ 138
Reset write protection	→ 138
Code incorrect	→ 138
▶ **Current output 1 to 2**	→ 139
Assign current output	→ 139
Current span	→ 140
Fixed current	→ 140
Damping output	→ 141
Failure mode	→ 141
Failure current	→ 142
Output current 1 to 2	→ 142
▶ **Switch output**	→ 143
Switch output function	→ 143
Assign status	→ 144
Assign limit	→ 144
Assign diagnostic behavior	→ 144
Switch-on value	→ 145
Switch-on delay	→ 146
Switch-off value	→ 146
Switch-off delay	→ 147
Failure mode	→ 147

	Switch status	→ 147
	Invert output signal	→ 147
▶ **Display**		→ 149
	Language	→ 149
	Format display	→ 149
	Value 1 to 4 display	→ 151
	Decimal places 1 to 4	→ 151
	Display interval	→ 151
	Display damping	→ 152
	Header	→ 152
	Header text	→ 153
	Separator	→ 153
	Number format	→ 153
	Decimal places menu	→ 153
	Backlight	→ 154
	Contrast display	→ 154
▶ **Configuration backup display**		→ 155
	Operating time	→ 155
	Last backup	→ 155
	Configuration management	→ 155

- Backup state → 156
- Comparison result → 156
- ▶ **Administration** → 158
  - ▶ **Define access code** → 160
    - Define access code → 160
    - Confirm access code → 160
  - Device reset → 158
- **Diagnostics** → 161
  - Actual diagnostics → 161
  - Previous diagnostics → 161
  - Operating time from restart → 162
  - Operating time → 155
  - ▶ **Diagnostic list** → 163
    - Diagnostics 1 to 5 → 163
  - ▶ **Event logbook** → 164
    - Filter options → 164
    - ▶ **Event list** → 164
  - ▶ **Device information** → 165
    - Device tag → 165
    - Serial number → 165
    - Firmware version → 165
    - Device name → 165
    - Order code → 166
    - Extended order code 1 to 3 → 166
    - Device revision → 166

- Device ID → 166
- Device type → 167
- Manufacturer ID → 167
- ▶ **Measured values** → 168
  - Distance → 168
  - Level linearized → 129
  - Output current 1 to 2 → 142
  - Measured current 1 → 169
  - Terminal voltage 1 → 169
  - Sensor temperature → 169
- ▶ **Data logging** → 170
  - Assign channel 1 to 4 → 170
  - Logging interval → 170
  - Clear logging data → 171
  - ▶ **Display channel 1 to 4** → 172
- ▶ **Simulation** → 174
  - Assign measurement variable → 175
  - Process variable value → 175
  - Current output 1 to 2 simulation → 175
  - Value current output 1 to 2 → 176
  - Switch output simulation → 176
  - Switch status → 176
  - Device alarm simulation → 177

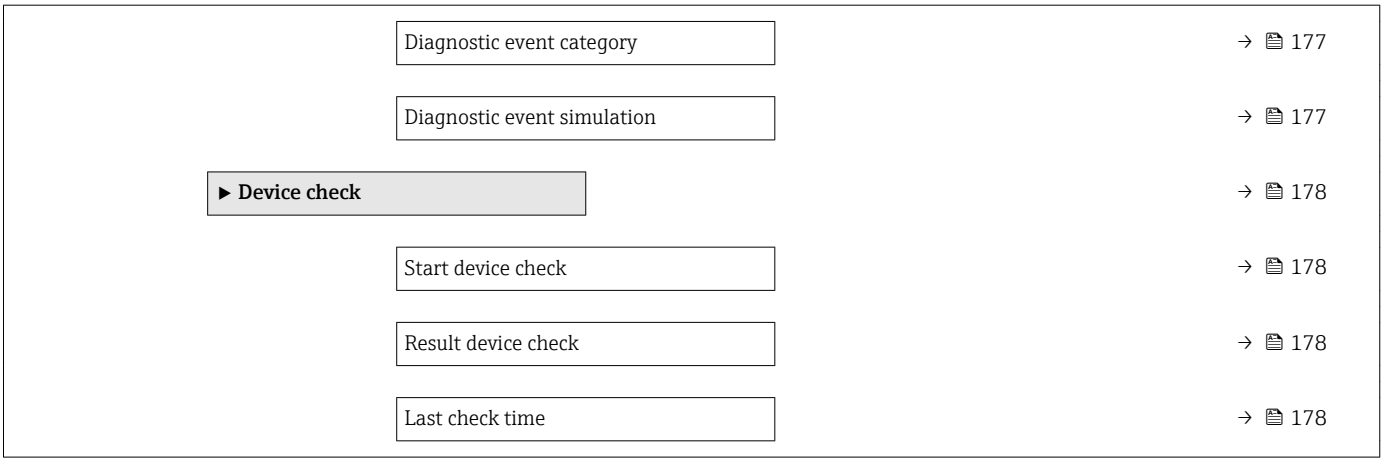
Diagnostic event category
→ 177
Diagnostic event simulation
→ 177
► Device check
→ 178
Start device check
→ 178
Result device check
→ 178
Last check time
→ 178

17.3 Overview of the operating menu (operating tool)

Navigation Operating menu

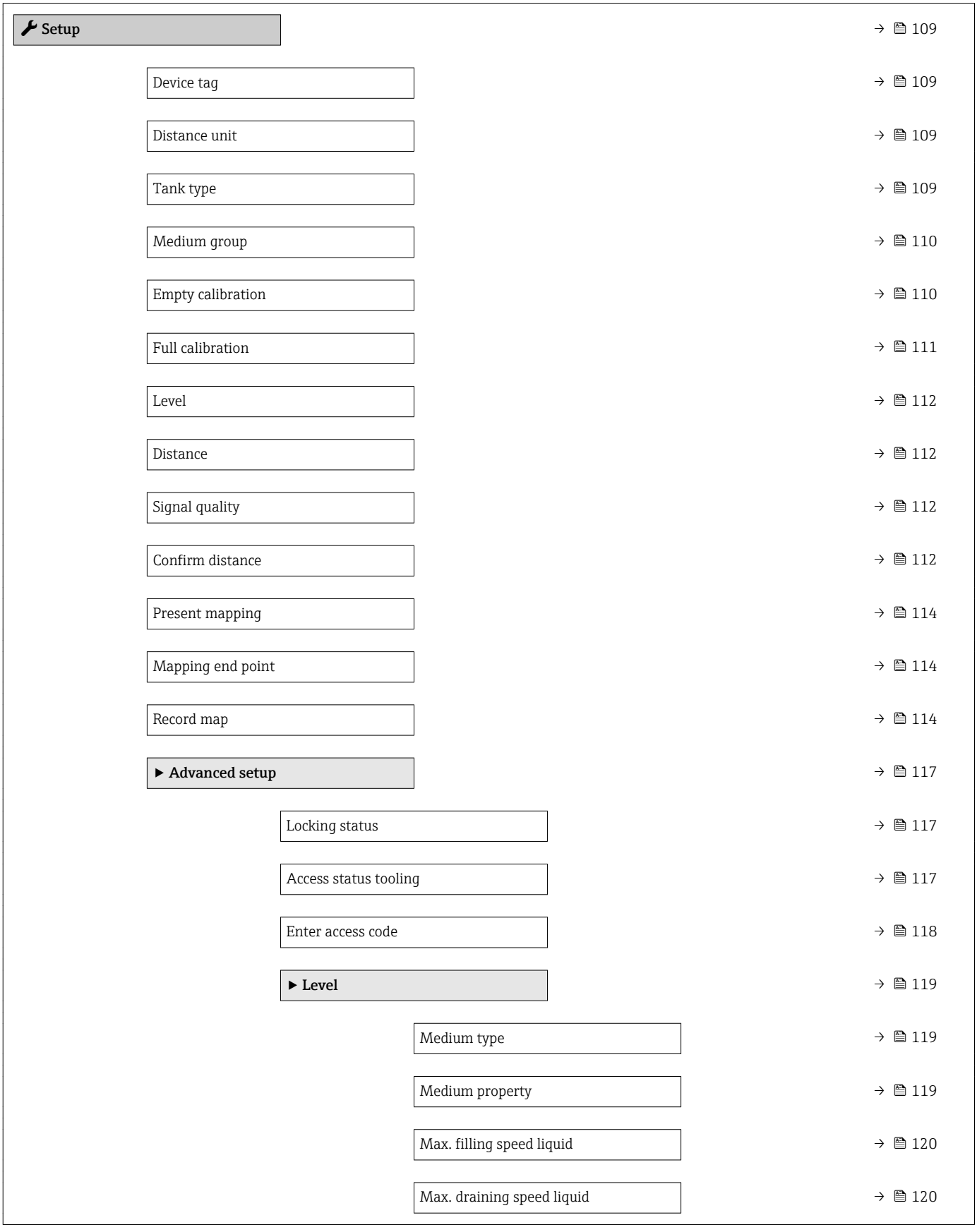

- Level unit → 121
- Blocking distance → 122
- Level correction → 122
- Tank/silo height → 122
- ▶ **Linearization** → 125
  - Linearization type → 127
  - Unit after linearization → 128
  - Free text → 129
  - Level linearized → 129
  - Maximum value → 130
  - Diameter → 130
  - Intermediate height → 130
  - Table mode → 131
  - Table number → 132
  - Level → 132
  - Level → 133
  - Customer value → 133
  - Activate table → 133
- ▶ **Safety settings** → 134
  - Output echo lost → 134
  - Value echo lost → 134
  - Ramp at echo lost → 135
  - Blocking distance → 122
- ▶ **SIL/WHG confirmation** → 137

▶ **Deactivate SIL/WHG** → 138

Reset write protection → 138

Code incorrect → 138

▶ **Current output 1 to 2** → 139

Assign current output → 139

Current span → 140

Fixed current → 140

Damping output → 141

Failure mode → 141

Failure current → 142

Output current 1 to 2 → 142

▶ **Switch output** → 143

Switch output function → 143

Assign status → 144

Assign limit → 144

Assign diagnostic behavior → 144

Switch-on value → 145

Switch-on delay → 146

Switch-off value → 146

Switch-off delay → 147

Failure mode → 147

Switch status → 147

Invert output signal → 147

▶ **Display** → 149

Language → 149

- Format display → 149
- Value 1 to 4 display → 151
- Decimal places 1 to 4 → 151
- Display interval → 151
- Display damping → 152
- Header → 152
- Header text → 153
- Separator → 153
- Number format → 153
- Decimal places menu → 153
- Backlight → 154
- Contrast display → 154
- **▶ Configuration backup display** → 155
  - Operating time → 155
  - Last backup → 155
  - Configuration management → 155
  - Backup state → 156
  - Comparison result → 156
- **▶ Administration** → 158
  - Define access code → 158
  - Device reset → 158

Diagnostics → 161

- Actual diagnostics → 161
- Timestamp → 161
- Previous diagnostics → 161

- Timestamp → 162
- Operating time from restart → 162
- Operating time → 155
- ▶ **Diagnostic list** → 163
  - Diagnostics 1 to 5 → 163
  - Timestamp → 163
- ▶ **Device information** → 165
  - Device tag → 165
  - Serial number → 165
  - Firmware version → 165
  - Device name → 165
  - Order code → 166
  - Extended order code 1 to 3 → 166
  - Device revision → 166
  - Device ID → 166
  - Device type → 167
  - Manufacturer ID → 167
- ▶ **Measured values** → 168
  - Distance → 168
  - Level linearized → 129
  - Output current 1 to 2 → 142
  - Measured current 1 → 169
  - Terminal voltage 1 → 169
  - Sensor temperature → 169

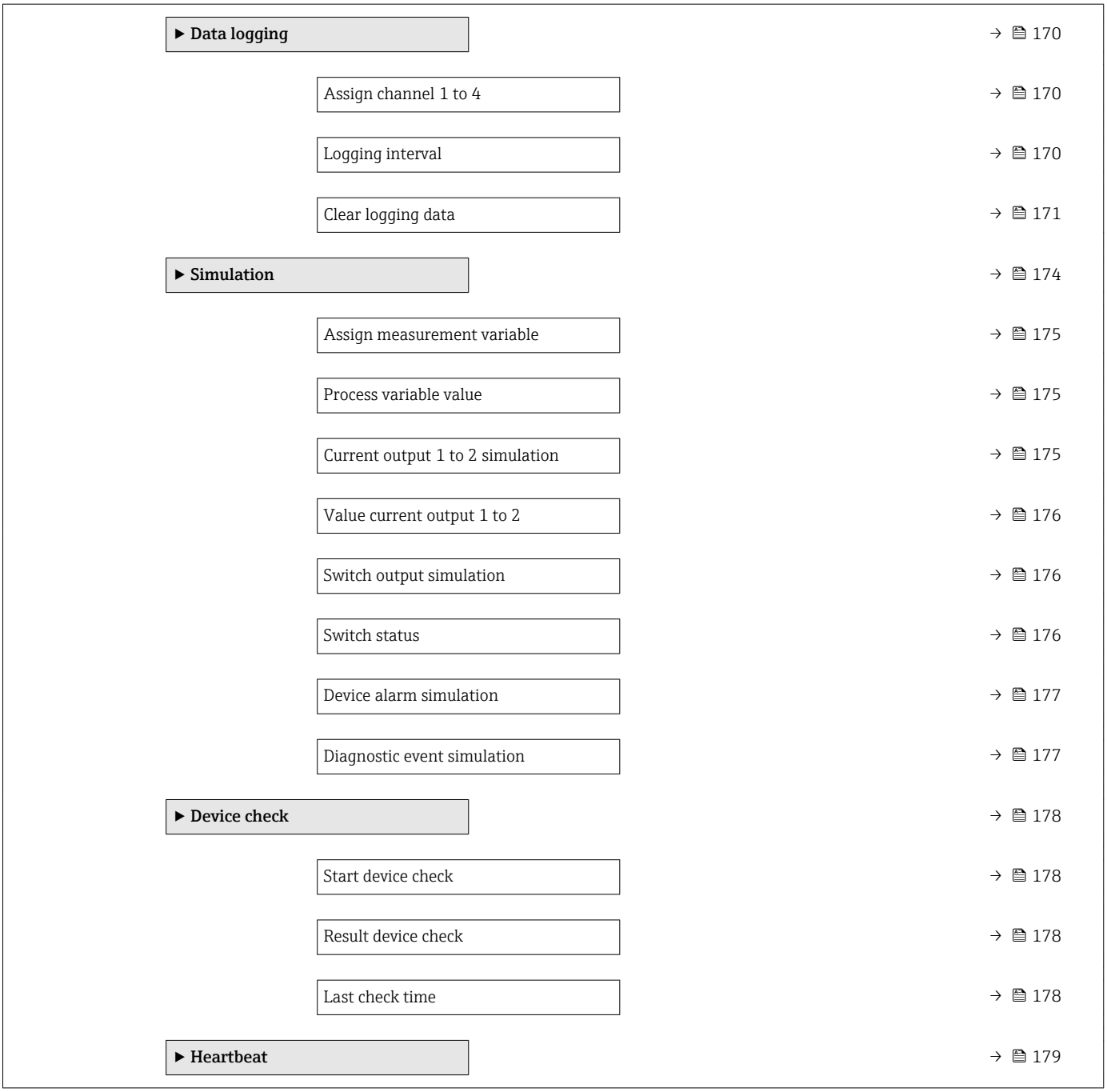
▶ Data logging → 170
Assign channel 1 to 4 → 170
Logging interval → 170
Clear logging data → 171
▶ Simulation → 174
Assign measurement variable → 175
Process variable value → 175
Current output 1 to 2 simulation → 175
Value current output 1 to 2 → 176
Switch output simulation → 176
Switch status → 176
Device alarm simulation → 177
Diagnostic event simulation → 177
▶ Device check → 178
Start device check → 178
Result device check → 178
Last check time → 178
▶ Heartbeat → 179

17.4 "Setup" menu

- : Marks the navigation path to the parameter via the display and operating module.
- : Marks the navigation path to the parameter via an operating tool (e.g. FieldCare).
- : Marks parameters which can be locked via the software locking.

Navigation Setup

Device tag

Navigation Setup → Device tag

Description Enter a unique name for the measuring point to identify the device quickly within the plant.

Factory setting FMR6x

Distance unit

Navigation Setup → Distance unit

Description Used for the basic calibration (Empty / Full).

Selection

SI units	*US units*
▪ mm	▪ ft
▪ m	▪ in

Factory setting m

Tank type

Navigation Setup → Tank type

Prerequisite **Medium type (→ 119) = Liquid**

Description Optimizes the signal filters for the respective tank type. Note: 'Workbench test' deactivates all filters. This option should exclusively be used for tests.

Selection
- Open channel
- Sphere
- Storage vessel
- Process vessel standard
- Process vessel with agitator
- Workbench test

Factory setting Process vessel standard

Additional information

Workbench test deactivates all filters. This option is intended for tests only.

Depending on the antenna some of the options mentioned above may not be available or there may be additional options.

Medium group

Navigation Setup → Medium group

Prerequisite **Medium type (→ 119) = Liquid**

Description Select medium group.

Selection

- Others
- Water based (DC >= 4)

Factory setting Others

Additional information

This parameter roughly specifies the dielectric constant (DC) of the medium. For a more detailed definition of the DC use the **Medium property** parameter (→ 119).

The **Medium group** parameter (→ 110) presets the **Medium property** parameter (→ 119) as follows:

Medium group (→ 110)	Medium property (→ 119)
Others	Unknown
Water based (DC >= 4)	DC 4 … 7

The **Medium property** parameter (→ 119) can be changed subsequently. However, when doing so, the **Medium group** parameter (→ 110) retains its value. Only the **Medium property**is relevant for the signal evaluation.

The measuring range may be reduced for small dielectric constants. For details refer to the Technical Information (TI) of the respective device.

Empty calibration

Navigation Setup → Empty calibration

Description Distance between process connection and minimum level (0%).

User entry Depending on the antenna

Factory setting Depending on the antenna

Additional information

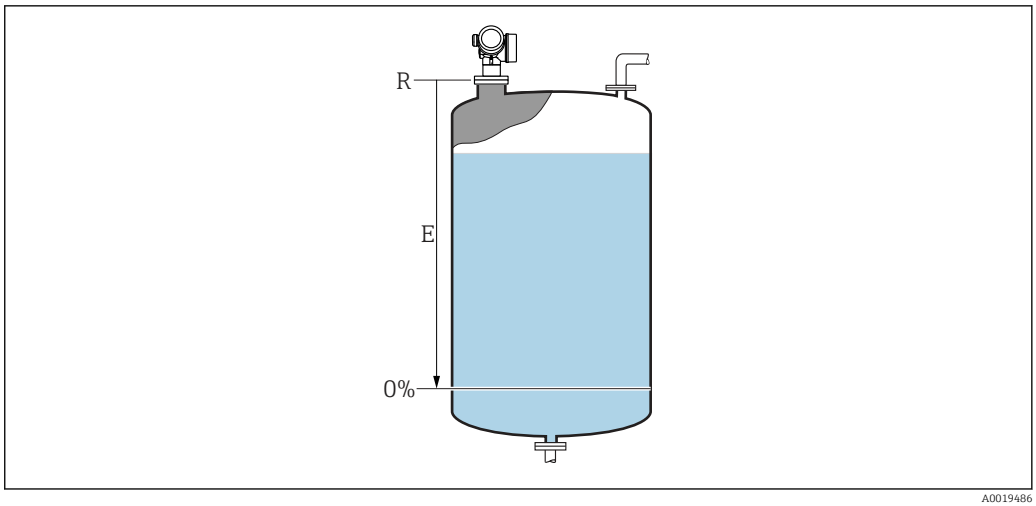

35 *Empty calibration (E) for level measurements in liquids*

The measuring range starts at the point at which the radar beam hits the tank or silo bottom. In the case of dished boiler ends or conical outlets levels below this point can not be measured.

Full calibration

Navigation Setup → Full calibration

Description Distance between minimum level (0%) and maximum level (100%).

User entry Depending on the antenna

Factory setting Depending on the antenna

Additional information

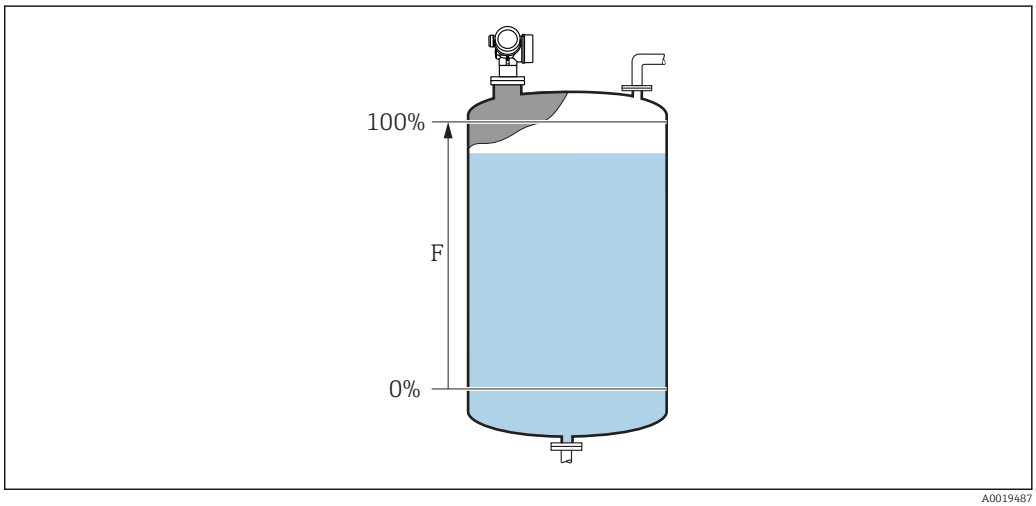

36 *Full calibration (F) for level measurements in liquids*

Level

Navigation Setup → Level

Description Displays measured level L (before linearization).

Additional information

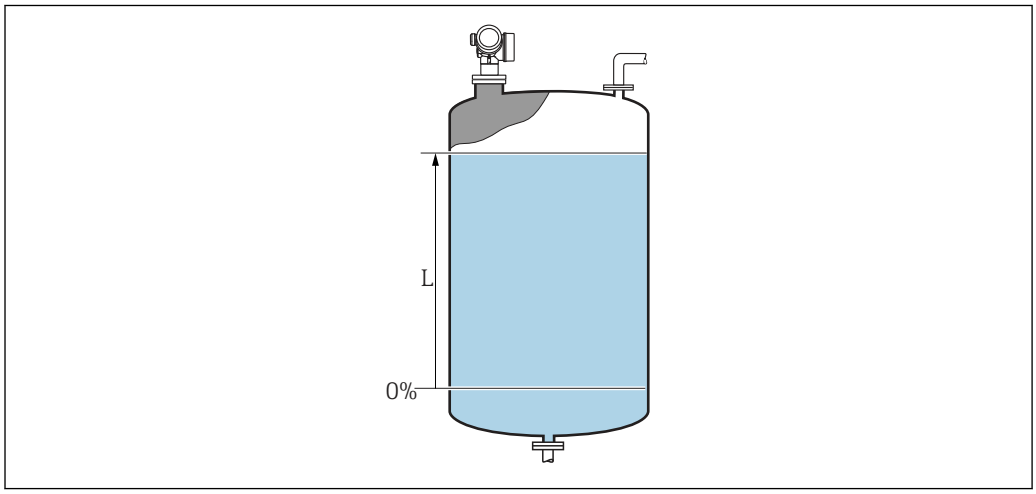

37 *Level in case of liquid measurements*

The unit is defined in the **Level unit** parameter (→ 121).

Distance

Navigation Setup → Distance

Description Distance between lower edge of flange or thread and medium surface.

Signal quality

Navigation Setup → Signal quality

Description Shows the quality of the evaluated level signal.

Confirm distance

Navigation Setup → Confirm distance

Description Specify, whether the measured distance matches the real distance. Depending on the selection the device automatically sets the range of mapping.

Selection

- Manual map
- Distance ok
- Distance unknown
- Distance too small *
- Distance too big *
- Tank empty
- Factory map

Factory setting

Distance unknown

Additional information

Meaning of the options

- **Manual map**
  To be selected if the range of mapping is to be defined manually in the **Mapping end point** parameter. In this case it is not necessary to confirm the distance.
- **Distance ok**
  To be selected if the measured distance matches the actual distance. The device performs a mapping.
- **Distance unknown**
  To be selected if the actual distance is unknown. A mapping can not be performed in this case.
- **Distance too small** 3)
  To be selected if the measured distance is smaller than the actual distance. The device searches for the next echo and returns to the **Confirm distance** parameter . The distance is recalculated and displayed. The comparison must be repeated until the displayed distance matches the actual distance. After this, the recording of the map can be started by selecting **Distance ok**.
- **Distance too big**
  To be selected if the measured distance exceeds the actual distance. The device adjusts the signal evaluation and returns to the **Confirm distance** parameter. The distance is recalculated and displayed. The comparison must be repeated until the displayed distance matches the actual distance. After this, the recording of the map can be started by selecting **Distance ok**.
- **Tank empty**
  To be selected if the tank is completely empty. The device records a mapping covering the complete measuring range as defined by the **Tank/silo height** parameter. By default, **Tank/silo height** = **Empty calibration**.
  Take into account that in case of conical outlets, for example, a measurement is only possible up to the point at which the radar hits the bottom of the tank or silo. If the **Tank empty** option is used, **Empty calibration (→ 110)** and **Tank/silo height** may not reach below this point as otherwise the empty signal is suppressed.
- **Factory map**
  The factory map permanently stored in the device is used.

No factory map is required for the FMR6x device generation. Therefore, a constant line of −116 dB is stored as the factory map. On commissioning, a map can be recorded which optimally fits the actual installation.

When operating via the display module, the measured distance is displayed together with this parameter for reference purposes.

If the teaching procedure with the **Distance too small** option or **Distance too big** option is quit before the distance has been confirmed, a map is **not** recorded and the teaching procedure is reset after 60 s.

* Visibility depends on order options or device settings
3) Only available for "Expert → Sensor → Echo tracking → **Evaluation mode** parameter " ≠ " **History off** option"

Present mapping

Navigation Setup → Present mapping

Description Present end of mapping.

Mapping end point

Navigation Setup → Mapping end point

Prerequisite **Confirm distance (→ 112)** = **Manual map** or **Distance too small**

Description New end point of mapping.

User entry 0.0001 to 999 999.9 m

Factory setting 0.1 m

Record map

Navigation Setup → Record map

Prerequisite **Confirm distance** = **Manual map** or **Distance too small**

Selection
- No
- Record map
- Overlay map
- Factory map
- Delete partial map

Factory setting No

17.4.1 "Mapping" wizard

The **Mapping** wizard is only available when operating via the local display. When operating via an operating tool, all parameters concerning the mapping are located directly in the **Setup** menu (→ 109)

In the **Mapping** wizard two parameters are displayed simultaneously on the display module at any one time. The upper parameter can be edited, whereas the lower parameter is displayed for reference purposes only.

Navigation Setup → Mapping

Confirm distance

Navigation Setup → Mapping → Confirm distance

Description → 112

Mapping end point

Navigation Setup → Mapping → Mapping end point

Description → 114

Record map

Navigation Setup → Mapping → Record map

Description → 114

Distance

Navigation Setup → Mapping → Distance

Description → 112

Prepare recording map

Navigation Setup → Mapping → Prepare recording map

Description Zeigt Status der Aufnahme der Ausblendung.

User interface

- Init. recording
- In progress
- Finished

17.4.2 "Advanced setup" submenu

Navigation Setup → Advanced setup

Locking status

Navigation Setup → Advanced setup → Locking status

Description Indicates the write protection with the highest priority that is currently active.

User interface
- Hardware locked
- SIL locked
- WHG locked
- Temporarily locked

Additional information

Meaning and priorities of the types of write protection
- **Hardware locked (priority 1)**
  The DIP switch for hardware locking is activated on the main electronics module. This locks write access to the parameters.
- **SIL locked (priority 2)**
  The SIL mode is activated. Writing access to the relevant parameters is denied.
- **WHG locked (priority 3)**
  The WHG mode is activated. Writing access to the relevant parameters is denied.
- **Temporarily locked (priority 4)**
  Write access to the parameters is temporarily locked on account of internal processes in progress in the device (e.g. data upload/download, reset etc.). The parameters can be modified as soon as the processes are complete.

On the display module, the -symbol appears in front of parameters that cannot be modified since they are write-protected.

Access status tooling

Navigation Setup → Advanced setup → Access status tooling

Description Shows the access authorization to the parameters via the operating tool.

Additional information

The access authorization can be changed via the **Enter access code** parameter (→ 118).

If additional write protection is active, this restricts the current access authorization even further. The write protection status can be viewed via the **Locking status** parameter (→ 117).

Access status display

Navigation Setup → Advanced setup → Access status display

Prerequisite The device has a local display.

Description Indicates access authorization to parameters via local display.

Additional information

The access authorization can be changed via the **Enter access code** parameter (→ 118).

If additional write protection is active, this restricts the current access authorization even further. The write protection status can be viewed via the **Locking status** parameter (→ 117).

Enter access code

Navigation Setup → Advanced setup → Enter access code

Description Enter access code to disable write protection of parameters.

User entry 0 to 9999

Additional information

- For local operation, the customer-specific access code, which has been defined in the **Define access code** parameter (→ 158), has to be entered.
- If an incorrect access code is entered, the user retains his current access authorization.
- The write protection affects all parameters marked with the -symbol in this document. On the local display, the -symbol in front of a parameter indicates that the parameter is write-protected.
- If no key is pressed for 10 min, or the user switches from the navigation and editing mode back to the measured value display mode, the device automatically locks the write-protected parameters after another 60 s.

Please contact your Endress+Hauser Sales Center if you lose your access code.

"Level" submenu

Navigation Setup → Advanced setup → Level

Medium type

Navigation Setup → Advanced setup → Level → Medium type

Description Specify medium type.

User interface
- Liquid
- Solid

Factory setting Liquid

Additional information This parameter determines the value of several other parameters and strongly influences the complete signal evaluation. Therefore, it is strongly recommended **not to change** the factory setting.

Medium property

Navigation Setup → Advanced setup → Level → Medium property

Description Specify relative dielectric constant ε_r of the medium.

Selection
- Unknown
- DC 1.4 ... 1.6
- DC 1.6 ... 1.9
- DC 1.9 ... 2.5
- DC 2.5 ... 4
- DC 4 ... 7
- DC 7 ... 15
- DC > 15

Factory setting Depending on the **Medium type (→ 119)** and **Medium group (→ 110)** parameters.

Additional information *Dependence on "Medium type" and "Medium group"*

Medium type (→ 119)	Medium group (→ 110)	Medium property (→ 119)
Solid		Unknown
Liquid	Water based (DC >= 4)	DC 4 ... 7
	Others	Unknown

For dielectric constants (DC values) of many media commonly used in various industries refer to:
- the Endress+Hauser DC manual (CP01076F)
- the Endress+Hauser "DC Values App" (available for Android and iOS)

Max. filling speed liquid

Navigation Setup → Advanced setup → Level → Max. filling speed liquid

Prerequisite **Medium type (→ 119) = Liquid**

Description Select expected maximum filling speed.

Selection
- Slow < 1cm (0.4in) /min
- Medium < 10cm (4in) /min
- Standard < 1m (40in) /min
- Fast < 2m (80in) /min
- Very fast > 2m (80in) /min
- No filter / test

Factory setting Depending on the **Tank type** parameter (→ 109)

Additional information By selecting the maximum expected filling and draining speed the signal evaluation is automatically optimized for the process.

Max. draining speed liquid	Step response time / s
Slow < 1cm (0.4in) /min	90
Medium < 10cm (4in) /min	50
Standard < 1m (40in) /min	19
Fast < 2m (80in) /min	8
Very fast > 2m (80in) /min	6
No filter / test	< 1

The filling and draining speeds can be set separately as the filling and draining procedures may be different.

With the **No filter / test** option all signal evaluation filters are deactivated. This option should exclusively be used for tests.

Max. filling speed liquid is preset by **Tank type**. It can, however, be adjusted to the process in the vessel at any time. If **Tank type** is changed again, it may be necessary to repeat the fine adjustment.

Max. draining speed liquid

Navigation Setup → Advanced setup → Level → Max. draining speed liquid

Prerequisite **Tank type (→ 109) = Liquid**

Description Select expected maximum draining speed.

Selection
- Slow < 1cm (0.4in) /min
- Medium < 10cm (4in) /min
- Standard < 1m (40in) /min

- Fast < 2m (80in) /min
- Very fast > 2m (80in) /min
- No filter / test

Factory setting

Depending on the **Tank type** parameter (→ 109)

Additional information

By selecting the maximum expected filling and draining speed the signal evaluation is automatically optimized for the process.

Max. draining speed liquid	Step response time / s
Slow < 1cm (0.4in) /min	90
Medium < 10cm (4in) /min	50
Standard < 1m (40in) /min	19
Fast < 2m (80in) /min	8
Very fast > 2m (80in) /min	6
No filter / test	< 1

The filling and draining speeds can be set separately as the filling and draining procedures may be different.

With the **No filter / test** option all signal evaluation filters are deactivated. This option should exclusively be used for tests.

Max. draining speed liquid is preset by **Tank type**. It can, however, be adjusted to the process in the vessel at any time. If **Tank type** is changed again, it may be necessary to repeat the fine adjustment.

Level unit

Navigation

Setup → Advanced setup → Level → Level unit

Description

Select level unit.

Selection

SI units
- %
- m
- mm

US units
- ft
- in

Factory setting

%

Additional information

The level unit may differ from the distance unit defined in the **Distance unit** parameter (→ 109):

- The unit defined in the **Distance unit** parameter is used for the basic calibration (**Empty calibration (→ 110)** and **Full calibration (→ 111)**).
- The unit defined in the **Level unit** parameter is used to display the (unlinearized) level.

Blocking distance

Navigation Setup → Advanced setup → Level → Blocking distance

Description Dead band in front of the process connection.

User entry 0 to 200 m

Factory setting
- **Empty calibration** - **Full calibration** - 200 mm (8 in)
- Minimum value: 150 mm (6 in)

Additional information The blocking distance can be used to suppress interference echos in the vicinity of the antenna.

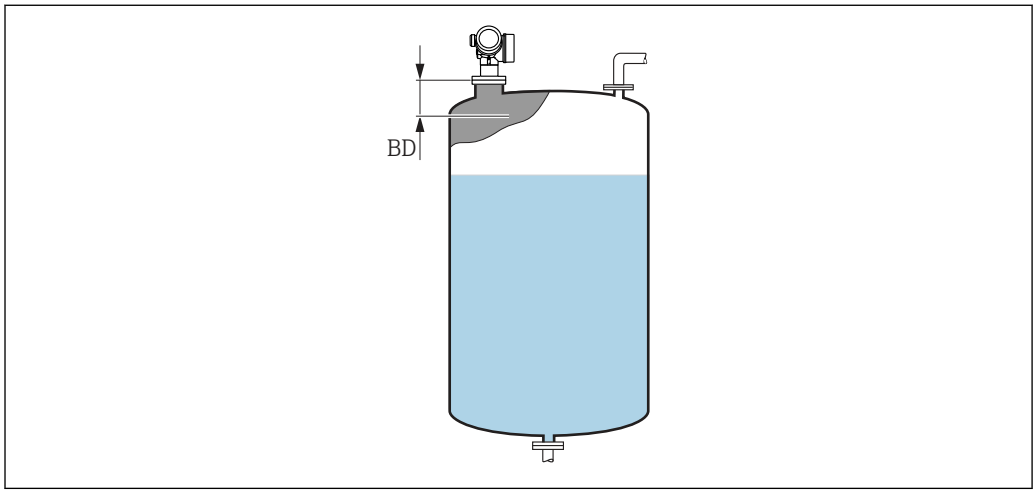

38 Blocking distance (BD) for liquid measurements

Level correction

Navigation Setup → Advanced setup → Level → Level correction

Description Specify level correction (if required).

User entry −200 000.0 to 200 000.0 %

Factory setting 0.0 %

Additional information The value specified in this parameter is added to the measured level (before linearization).

Tank/silo height

Navigation Setup → Advanced setup → Level → Tank/silo height

Description Total height of the tank or silo (measured from the process connection)

User entry −999.9999 to 999.9999 m

Factory setting **Empty calibration (→ 110)**

Additional information If the parametrized measuring range differs significantly from the tank or silo height, it is recommended to enter the tank or silo height. Example: Continuous level monitoring in the upper third of a tank or silo.

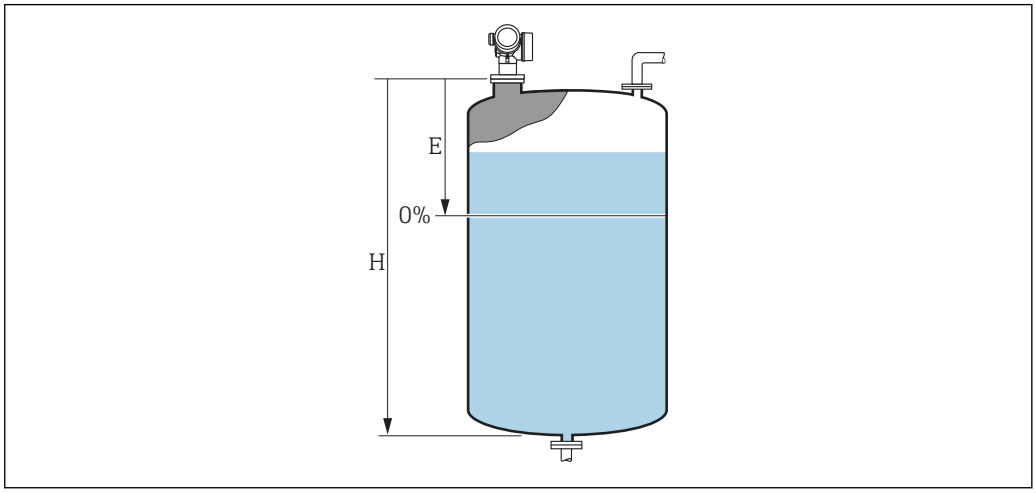

39 "Tank/silo height" parameter' for measurements in liquids

E Empty calibration (→ 110)
H Tank/silo height (→ 122)

For tanks with conical outlet, **Tank/silo height** should not be changed as in this type of applications **Empty calibration (→ 110)** is usually **not** much less-than the tank or silo height.

"Linearization" submenu

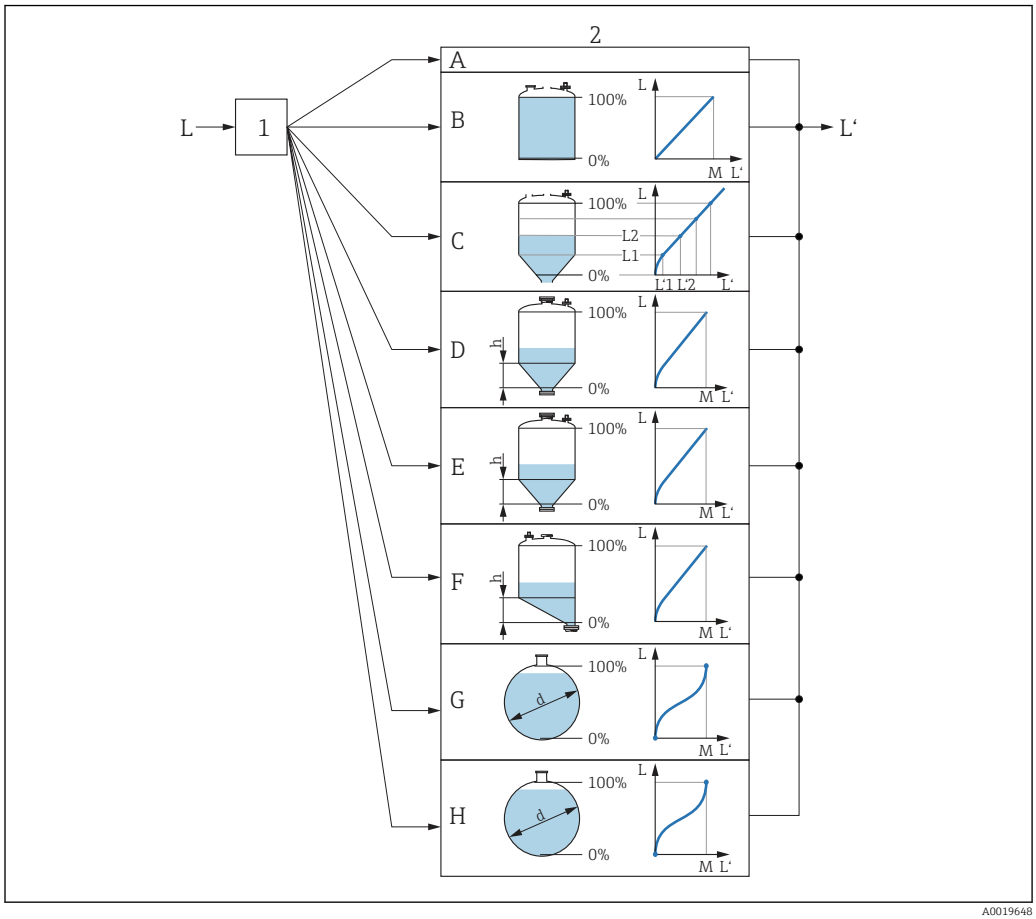

40 *Linearization: Transformation of the level and (if relevant) the interface height into a volume or weight; the transformation is dependent on the shape of the vessel.*

1 *Selection of linearization type and unit*
2 *Configuration of the linearization*
A *Linearization type (→ 127) = None*
B *Linearization type (→ 127) = Linear*
C *Linearization type (→ 127) = Table*
D *Linearization type (→ 127) = Pyramid bottom*
E *Linearization type (→ 127) = Conical bottom*
F *Linearization type (→ 127) = Angled bottom*
G *Linearization type (→ 127) = Horizontal cylinder*
H *Linearization type (→ 127) = Sphere*
L *Level before linearization (measured in distance units)*
L' *Level linearized (→ 129) (corresponds to volume or weight)*
M *Maximum value (→ 130)*
d *Diameter (→ 130)*
h *Intermediate height (→ 130)*

Structure of the submenu on the display module

Navigation Setup → Advanced setup → Linearization

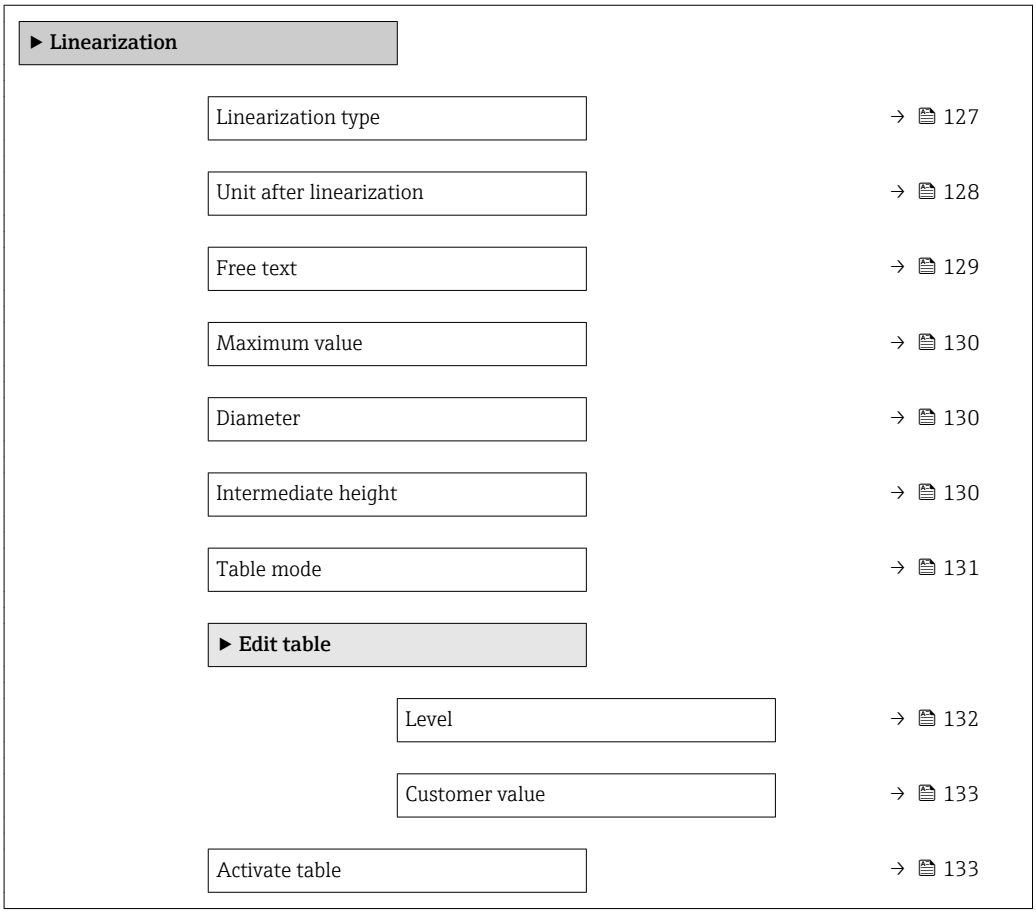

Structure of the submenu in an operating tool (e.g. FieldCare)

Navigation Setup → Advanced setup → Linearization

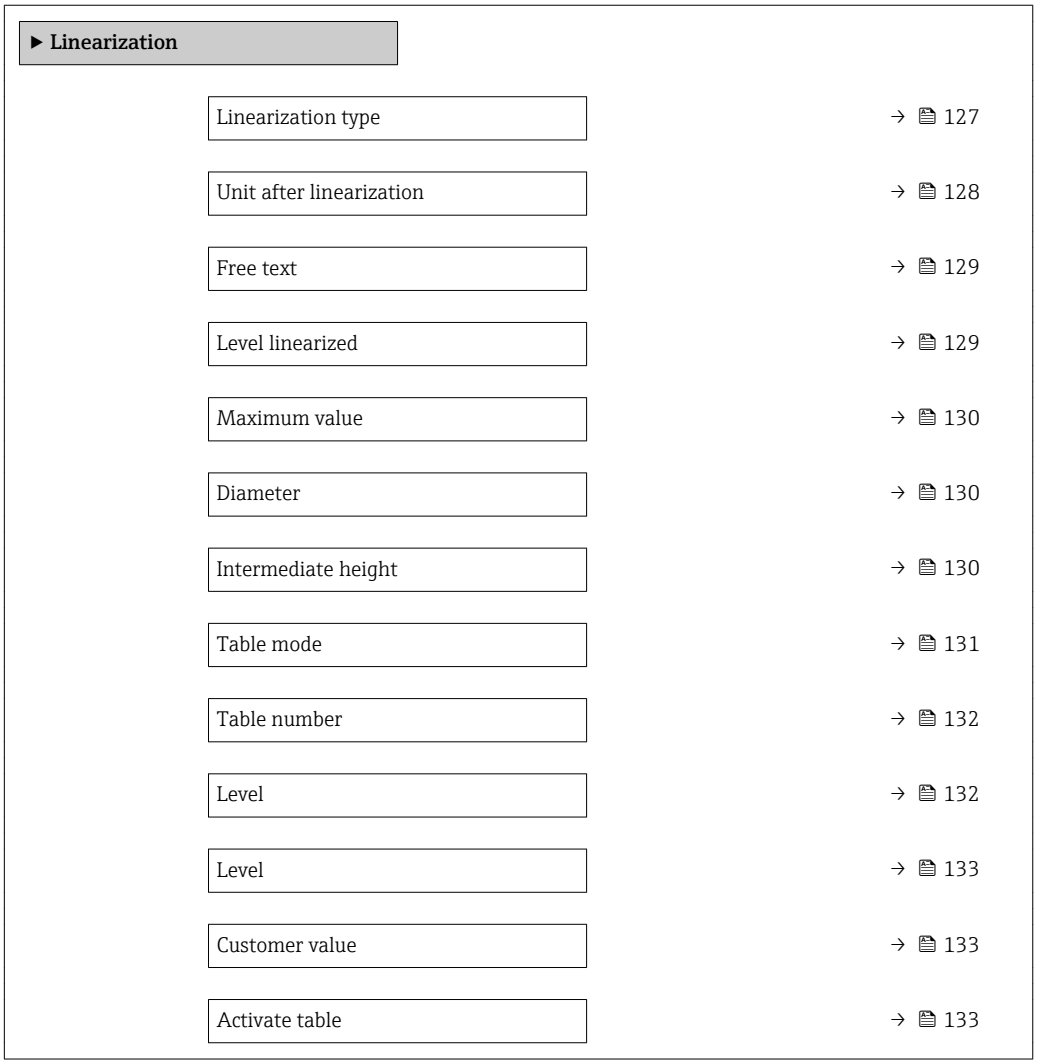

Description of parameters

Navigation Setup → Advanced setup → Linearization

Linearization type

Navigation Setup → Advanced setup → Linearization → Linearization type

Description Select linearization type.

Selection
- None
- Linear
- Table
- Pyramid bottom
- Conical bottom
- Angled bottom
- Horizontal cylinder
- Sphere

Factory setting None

Additional information

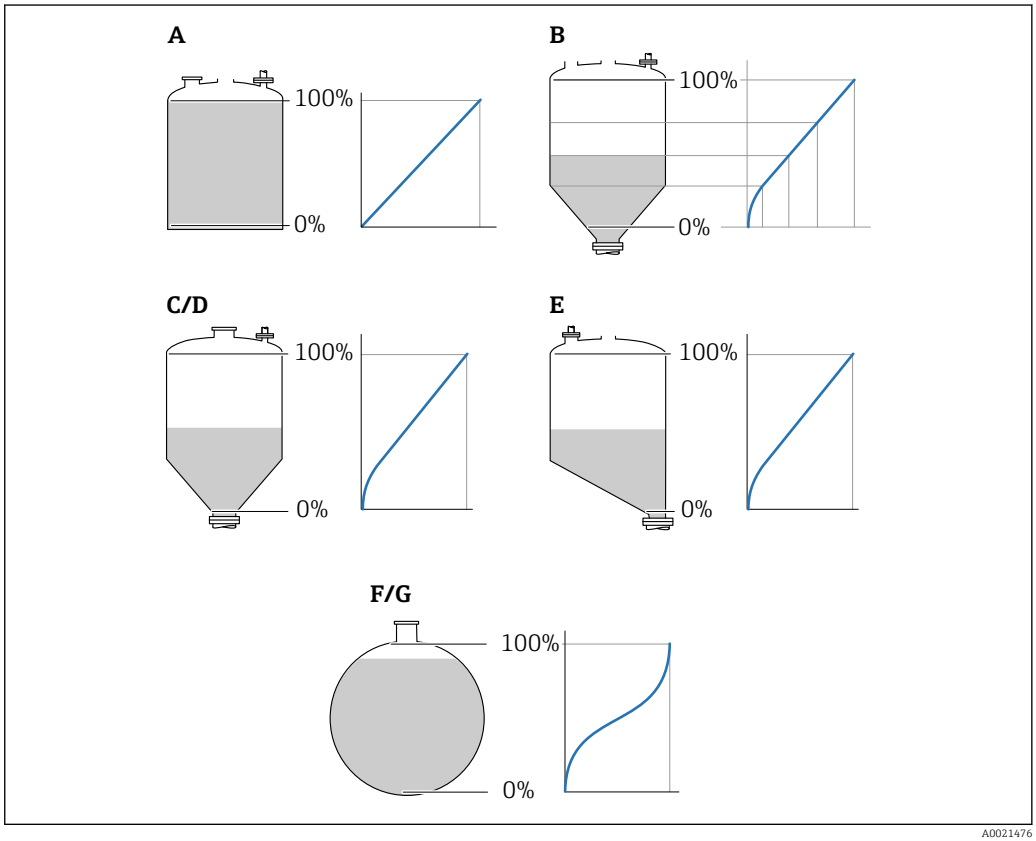

41 *Linearization types*

A None
B Table
C Pyramid bottom
D Conical bottom
E Angled bottom
F Sphere
G Horizontal cylinder

Meaning of the options

- **None**
  The level is transmitted in the level unit without linearization.
- **Linear**
  The output value (volume/weight) is directly proportional to the level L. This is valid, for example, for vertical cylinders. The following additional parameters have to be specified:
  – **Unit after linearization (→ 🖹 128)**
  – **Maximum value (→ 🖹 130)**: Maximum volume or weight
- **Table**
  The relationship between the measured level L and the output value (volume/weight) is given by a linearization table consisting of up to 32 pairs of values "level - volume" or "level - weight", respectively. The following additional parameters have to be specified:
  – **Unit after linearization (→ 🖹 128)**
  – **Table mode (→ 🖹 131)**
  – For each table point: **Level (→ 🖹 132)**
  – For each table point: **Customer value (→ 🖹 133)**
  – **Activate table (→ 🖹 133)**
- **Pyramid bottom**
  The output value corresponds to the volume or weight in a silo with pyramid bottom. The following additional parameters have to be specified:
  – **Unit after linearization (→ 🖹 128)**
  – **Maximum value (→ 🖹 130)**: Maximum volume or weight
  – **Intermediate height (→ 🖹 130)**: The height of the pyramid
- **Conical bottom**
  The output value corresponds to the volume or weight in a tank with conical bottom. The following additional parameters have to be specified:
  – **Unit after linearization (→ 🖹 128)**
  – **Maximum value (→ 🖹 130)**: Maximum volume or weight
  – **Intermediate height (→ 🖹 130)**: The height of the conical part of the tank
- **Angled bottom**
  The output value corresponds to the volume or weight in a silo with an angled bottom. The following additional parameters have to be specified:
  – **Unit after linearization (→ 🖹 128)**
  – **Maximum value (→ 🖹 130)**: Maximum volume or weight
  – **Intermediate height (→ 🖹 130)**: Height of the angled bottom
- **Horizontal cylinder**
  The output value corresponds to the volume or weight in a horizontal cylinder. The following additional parameters have to be specified:
  – **Unit after linearization (→ 🖹 128)**
  – **Maximum value (→ 🖹 130)**: Maximum volume or weight
  – **Diameter (→ 🖹 130)**
- **Sphere**
  The output value corresponds to the volume or weight in a spherical tank. The following additional parameters have to be specified:
  – **Unit after linearization (→ 🖹 128)**
  – **Maximum value (→ 🖹 130)**: Maximum volume or weight
  – **Diameter (→ 🖹 130)**

Unit after linearization

Navigation Setup → Advanced setup → Linearization → Unit after linearization

Prerequisite **Linearization type (→ 🖹 127)** ≠ None

Description Select unit of the lineaized value.

Selection

SI units
- STon
- t
- kg
- cm^3
- dm^3
- m^3
- hl
- l
- %
- mm
- m

US units
- lb
- UsGal
- ft^3
- ft
- in

Imperial units
impGal

Custom-specific units
Free text

Factory setting

%

Additional information

The selected unit is only used to be indicated on the display. The measured value is **not** transformed according to the selected unit.

It is also possible to configure a distance-to-distance linearization, i.e. a transformation from the level unit to a different distance unit. To do so, select the **Linear** linearization mode. In order to define the new level unit, select the **Free text** option in the **Unit after linearization** parameter and enter the required unit into the **Free text** parameter (→ 129).

Free text

Navigation

Setup → Advanced setup → Linearization → Free text

Prerequisite

Unit after linearization (→ 128) = Free text

Description

Enter unit symbol.

User entry

Up to 32 alphanumerical characters (letters, numbers, special characters)

Factory setting

Free text

Level linearized

Navigation

Setup → Advanced setup → Linearization → Level linearized

Description

Displays linearized level.

Additional information

The unit is defined by the **Unit after linearization** parameter → 128.

Maximum value

Navigation Setup → Advanced setup → Linearization → Maximum value

Prerequisite **Linearization type (→ 127)** has one of the following values:
- Linear
- Pyramid bottom
- Conical bottom
- Angled bottom
- Horizontal cylinder
- Sphere

Description Linearized value corresponding to a level of 100%.

User entry −50 000.0 to 50 000.0 %

Factory setting 100.0 %

Diameter

Navigation Setup → Advanced setup → Linearization → Diameter

Prerequisite **Linearization type (→ 127)** has one of the following values:
- Horizontal cylinder
- Sphere

Description Diameter of the cylindrical or spherical tank.

User entry 0 to 9 999.999 m

Factory setting 2 m

Additional information The unit is defined in the **Distance unit** parameter (→ 109).

Intermediate height

Navigation Setup → Advanced setup → Linearization → Intermediate height

Prerequisite **Linearization type (→ 127)** has one of the following values:
- Pyramid bottom
- Conical bottom
- Angled bottom

Description Height of the pyramid, conical or angled bottom.

User entry 0 to 200 m

Factory setting 0 m

Additional information

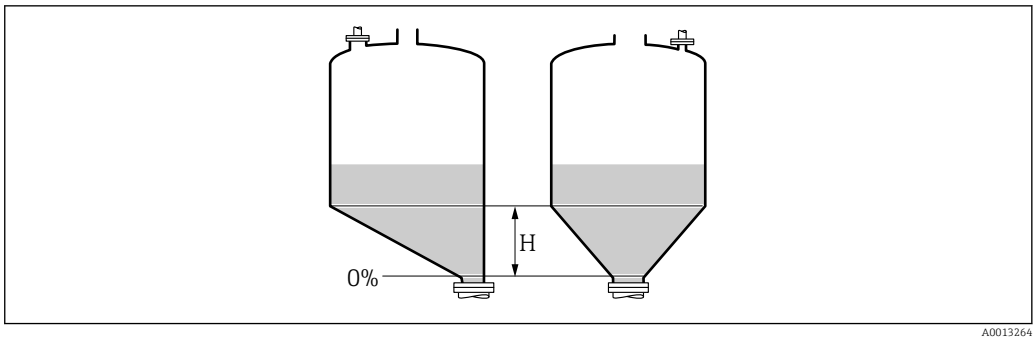

H Intermediate height

The unit is defined in the **Distance unit** parameter (→ 109).

Table mode

Navigation Setup → Advanced setup → Linearization → Table mode

Prerequisite **Linearization type (→ 127) = Table**

Description Select editing mode of the linearization table.

Selection
- Manual
- Semiautomatic
- Clear table
- Sort table

Factory setting Manual

Additional information

Meaning of the options
- **Manual**
  The level and the associated linearized value are entered manually for each linearization point.
- **Semiautomatic**
  The level is measured by the device for each linearization point. The associated linearized value is entered manually.
- **Clear table**
  Deletes the existing linearization table.
- **Sort table**
  Rearranges the linerization points into an ascending order.

Conditions the linearization table must meet:
- The table may consist of up to 32 pairs of values "Level - Linearized Value".
- The table must be monotonic (monotonically increasing or decreasing).
- The first linearization point must refer to the minimum level.
- The last linearization point must refer to the maximum level.

Before entering a linearization table, the values for **Empty calibration (→ 110)** and **Full calibration (→ 111)** must be set correctly.

If values of the table need to be changed after the full or empty calibration have been changed, a correct evaluation is only ensured if the existing table is deleted and the complete table is entered again. To do so delete the existing table (**Table mode (→ 131)** = **Clear table**). Then enter a new table.

How to enter the table

- Via FieldCare
  The table points can be entered via the **Table number (→ 132)**, **Level (→ 132)** and **Customer value (→ 133)** parameters. As an alternative, the graphic table editor may be used: Device Operation → Device Functions → Additional Functions → Linearization (Online/Offline)
- Via local display
  Select the **Edit table** submenu to call up the graphic table editor. The table is displayed and can be edited line by line.

The factory setting for the level unit is "%". If you want to enter the linearization table in physical units, you must select the appropriate unit in the **Level unit** parameter (→ 121) beforehand.

If a decreasing table is entered, the values for 20 mA and 4 mA of the current output are interchanged. That means: 20 mA refers to the lowest level, whereas 4 mA refers to the highest level.

Table number

Navigation Setup → Advanced setup → Linearization → Table number

Prerequisite **Linearization type (→ 127)** = **Table**

Description Select table point you are going to enter or change.

User entry 1 to 32

Factory setting 1

Level (Manual)

Navigation Setup → Advanced setup → Linearization → Level

Prerequisite

- **Linearization type (→ 127)** = Table
- **Table mode (→ 131)** = Manual

Description Enter level value of the table point (value before linearization).

User entry Signed floating-point number

Factory setting 0 %

Level (Semiautomatic)

Navigation Setup → Advanced setup → Linearization → Level

Prerequisite
- **Linearization type (→ 127)** = **Table**
- **Table mode (→ 131)** = **Semiautomatic**

Description Displays measured level (value before linearization). This value is transmitted to the table.

Customer value

Navigation Setup → Advanced setup → Linearization → Customer value

Prerequisite **Linearization type (→ 127)** = **Table**

Description Enter linearized value for the table point.

User entry Signed floating-point number

Factory setting 0 %

Activate table

Navigation Setup → Advanced setup → Linearization → Activate table

Prerequisite **Linearization type (→ 127)** = **Table**

Description Activate (enable) or deactivate (disable) the linearization table.

Selection
- Disable
- Enable

Factory setting Disable

Additional information

Meaning of the options
- **Disable**
  The measured level is not linearized.
  If **Linearization type (→ 127)** = **Table** at the same time, the device issues error message F435.
- **Enable**
  The measured level is linearized according to the table.

When editing the table, the **Activate table** parameter is automatically reset to **Disable** and must be reset to **Enable** after the table has been entered.

"Safety settings" submenu

Navigation Setup → Advanced setup → Safety settings

Output echo lost

Navigation Setup → Advanced setup → Safety settings → Output echo lost

Description Output signal in case of a lost echo.

Selection
- Last valid value
- Ramp at echo lost
- Value echo lost
- Alarm

Factory setting Last valid value

Additional information

Meaning of the options
- **Last valid value**
  The last valid value is kept in the case of a lost echo.
- **Ramp at echo lost** [4]
  In the case of a lost echo the output value is continously shifted towards 0% or 100%. The slope of the ramp is defined in the **Ramp at echo lost** parameter (→ 135).
- **Value echo lost** [4]
  In the case of a lost echo the output assumes the value defined in the **Value echo lost** parameter (→ 134).
- **Alarm**
  In the case of a lost echo the device generates an alarm; see the **Failure mode** parameter (→ 141)

Value echo lost

Navigation Setup → Advanced setup → Safety settings → Value echo lost

Prerequisite **Output echo lost (→ 134)** = **Value echo lost**

Description Output value in case of a lost echo

User entry 0 to 200 000.0 %

Factory setting 0.0 %

Additional information Use the unit which has been defined for the measured value output:
- without linearization: **Level unit (→ 121)**
- with linearization: **Unit after linearization (→ 128)**

4) Only visible if "Linearization type (→ 127)" = "None"

Ramp at echo lost

Navigation Setup → Advanced setup → Safety settings → Ramp at echo lost

Prerequisite **Output echo lost (→ 134) = Ramp at echo lost**

Description Slope of the ramp in the case of a lost echo

User entry Signed floating-point number

Factory setting 0.0 %/min

Additional information

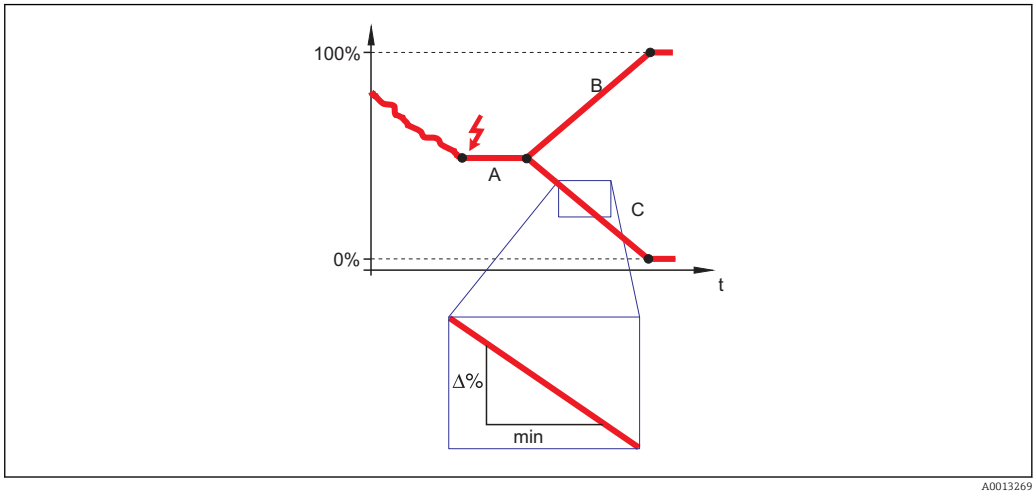

A Delay time echo lost
B Ramp at echo lost (→ 135) (positive value)
C Ramp at echo lost (→ 135) (negative value)

- The unit for the slope of the ramp is "percentage of the measuring range per minute" (%/min).
- For a negative slope of the ramp: The measured value is continuously decreased until it reaches 0%.
- For a positive slope of the ramp: The measured value is continuosly increased until it reaches 100%.

Blocking distance

Navigation Setup → Advanced setup → Safety settings → Blocking distance

Description Specify blocking distance BD.

User entry 0 to 200 m

Factory setting 0 mm (0 in)

Additional information Signals in the blocking distance are only evaluated if they have been outside the blocking distance when the device was switched on and move into the blocking distance due to a

level change during operation. Signals which are already in the blocking distance when the device is switched on, are ignored.

If required, a different behavior for signals in the blocking distance can be defined by the Endress+Hauser service.

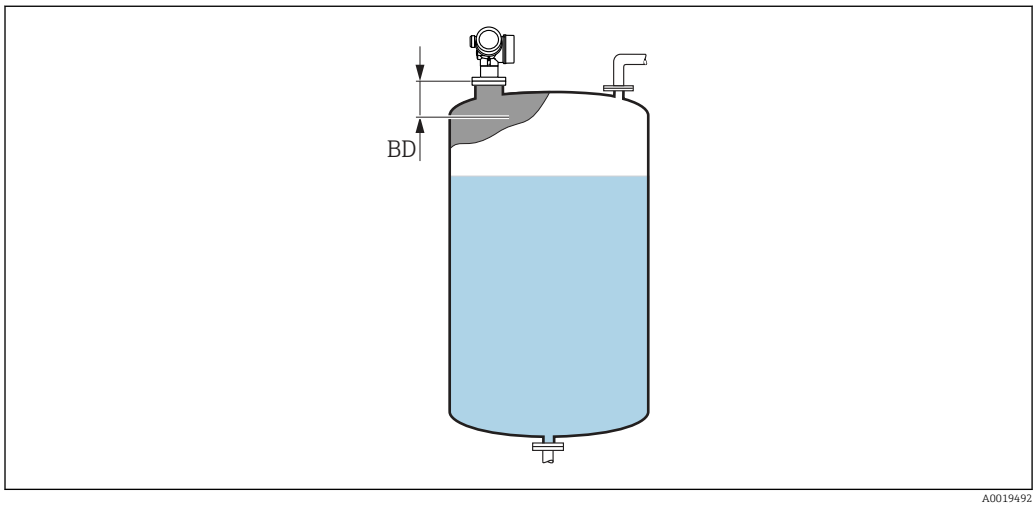

42 *Blocking distance (BD) for liquid measurements*

"SIL/WHG confirmation" wizard

The **SIL/WHG confirmation** wizard is only available for devices with SIL or WHG approval (Feature 590: "Additional Approval", option LA: "SIL" or LC: "WHG overfill prevention") which are currently **not** in the SIL- or WHG-locked state.

The **SIL/WHG confirmation** wizard is required to lock the device according to SIL or WHG. For details refer to the "Functional Safety Manual" of the respective device, which describes the locking procedure and the parameters of the sequence.

Navigation Setup → Advanced setup → SIL/WHG confirmation

"Deactivate SIL/WHG" wizard

The **Deactivate SIL/WHG** wizard (→ 138) is only visible if the device is SIL-locked or WHG-locked. For details refer to the "Functional Safety Manual" of the respective device.

Navigation Setup → Advanced setup → Deactivate SIL/WHG

Reset write protection

Navigation Setup → Advanced setup → Deactivate SIL/WHG → Reset write protection

Description Enter unlocking code.

User entry 0 to 65 535

Factory setting 0

Code incorrect

Navigation Setup → Advanced setup → Deactivate SIL/WHG → Code incorrect

Description Indicates that a wrong unlocking code has been entered. Select procedure.

Selection
- Reenter code
- Abort sequence

Factory setting Reenter code

"Current output 1 to 2" submenu

The **Current output 2** submenu (→ 139) is only available for devices with two current outputs.

Navigation Setup → Advanced setup → Current output 1 to 2

Assign current output 1 to 2

Navigation Setup → Advanced setup → Current output 1 to 2 → Assign current output

Description Select process variable for current output.

Selection
- Level linearized
- Distance
- Electronic temperature
- Relative echo amplitude
- Analog output adv. diagnostics 1
- Analog output adv. diagnostics 2
- Area of incoupling

Factory setting
- Current output 1: Level linearized
- Current output 2 [5]: Level linearized

Additional information *Definition of the current range for the process variables*

Process variable	4 mA value	20 mA value
Level linearized	0 % [1] or the associated linearized value	100 % [2] or the associated linearized value
Distance	0 (i.e. level is at the reference point)	**Empty calibration (→ 110)** (i.e. level is at 0 %)
Electronic temperature	−50 °C (−58 °F)	100 °C (212 °F)
Analog output adv. diagnostics 1/2	depending on the parametrization of the Advanced Diagnostics	

1) the 0% level is defined by **Empty calibration** parameter (→ 110)
2) The 100% level is defined by **Full calibration** parameter (→ 111)

This can be done by the following parameters:
- Expert → Output → Current output 1 to 2 → Turn down
- Expert → Output → Current output 1 to 2 → 4 mA value
- Expert → Output → Current output 1 to 2 → 20 mA value

5) only for devices with two current outputs

Current span

Navigation Setup → Advanced setup → Current output 1 to 2 → Current span

Description Determines the current range used to transmit the measured value. '4...20mA': Measured variable: 4 ...20 mA '4...20mA NAMUR': Measured variable: 3.8 ... 20.5 mA '4...20mA US': Measured variable: 3.9 ... 20.8 mA 'Fixed current': Measured variable transmitted via HART only Note: Currents below 3.6 mA or above 21.95 mA can be used to signal an alarm.

Selection
- 4...20 mA
- 4...20 mA NAMUR
- 4...20 mA US
- Fixed current

Factory setting 4...20 mA NAMUR

Additional information *Meaning of the options*

Option	Current range for process variable	Lower alarm signal level	Upper alarm signal level
4...20 mA	4 to 20.5 mA	< 3.6 mA	> 21.95 mA
4...20 mA NAMUR	3.8 to 20.5 mA	< 3.6 mA	> 21.95 mA
4...20 mA US	3.9 to 20.8 mA	< 3.6 mA	> 21.95 mA
Fixed current	Constant current, defined in the **Fixed current** parameter (→ 140).		

- In the case of an error, the output current assumes the value defined in the **Failure mode** parameter (→ 141).
- If the meausred value is out of the measuring range, diagnostic message **Current output** is issued.

In a HART multidrop loop only one device can use the analog current to transmit a signal. For all other devices one must set:
- **Current span** = **Fixed current**
- **Fixed current (→ 140)** = **4 mA**

Fixed current

Navigation Setup → Advanced setup → Current output 1 to 2 → Fixed current

Prerequisite **Current span (→ 140)** = **Fixed current**

Description Define constant value of the output current.

User entry 4 to 22.5 mA

Factory setting 4 mA

Damping output

Navigation Setup → Advanced setup → Current output 1 to 2 → Damping output

Description Reaction time of the output signal on fluctuation in the measured value.

User entry 0.0 to 999.9 s

Factory setting 0.0 s

Additional information Fluctuations of the measured value affect the output current with an exponential delay, the time constant τ of which is defined in this parameter. With a small time constant the output reacts immediately to changes of the measrued value. With a big time constant the reaction of the output is more delayed. For τ = 0 (factory setting) there is no damping.

Failure mode

Navigation Setup → Advanced setup → Current output 1 to 2 → Failure mode

Prerequisite **Current span (→ 140) ≠ Fixed current**

Description Defines which current the output assumes in the case of an error. 'Min.': < 3.6mA 'Max.': > 21.95mA 'Last valid value': Last valid value before occurrence of the error. 'Actual value': Output current is equal to the measured value; error is ignored. 'Defined value': User defined value.

Selection
- Min.
- Max.
- Last valid value
- Actual value
- Defined value

Factory setting Max.

Additional information

Meaning of the options
- **Min.**
  The current output adopts the value of the lower alarm level according to the **Current span** parameter (→ 140).
- **Max.**
  The current output adopts the value of the upper alarm level according to the **Current span** parameter (→ 140).
- **Last valid value**
  The current remains constant at the last value it hat before the error occurred.
- **Actual value**
  The output current follows the actual measured value; the error is ignored.
- **Defined value**
  The output current assumes the value defined in the **Failure current** parameter (→ 142).

The error behavior of other output channels is not influenced by these settings but is defined in separate parameters.

Failure current

Navigation Setup → Advanced setup → Current output 1 to 2 → Failure current

Prerequisite **Failure mode (→ 141) = Defined value**

Description Defines which current the output assumes in case of an error.

User entry 3.59 to 22.5 mA

Factory setting 22.5 mA

Output current 1 to 2

Navigation Setup → Advanced setup → Current output 1 to 2 → Output current 1 to 2

Description Shows the actual calculated value of the output current.

"Switch output" submenu

The **Switch output** submenu (→ 143) is only visible for devices with switch output. [6]

Navigation Setup → Advanced setup → Switch output

Switch output function

Navigation Setup → Advanced setup → Switch output → Switch output function

Description Defines the function of the switch output. 'Off' The switch output is always open (non-conductive) 'On' The switch output is always closed (conductive). 'Diagnostic behavior' The switch output is normally closed and is only opened if a diagnostic event is present. 'Limit' The switch output is normally closed and is only opened if a measured variable exceeds a defined limit. 'Digital output' The switch output is controlled by one of the digital output blocks of the device.

Selection
- Off
- On
- Diagnostic behavior
- Limit
- Digital Output

Factory setting Off

Additional information

Meaning of the options
- **Off**
  The output is always open (non-conductive).
- **On**
  The output is always closed (conductive).
- **Diagnostic behavior**
  The output is normally closed and is only opened if a diagnostic event is present. The **Assign diagnostic behavior** parameter (→ 144) determines for which type of event the output is opened.
- **Limit**
  The output is normally closed and is only opened if a measured variable exceeds or falls below a defined limit. The limit values are defined by the following parameters:
  – **Assign limit (→ 144)**
  – **Switch-on value (→ 145)**
  – **Switch-off value (→ 146)**
- **Digital Output**
  The switching state of the output tracks the output value of a DI function block. The function block is selected in the **Assign status** parameter (→ 144).

The **Off** and **On** options can be used to simulate the switch output.

6) Ordering feature 020 "Power supply; Output", option B, E or G

Assign status

Navigation Setup → Advanced setup → Switch output → Assign status

Prerequisite **Switch output function (→ 143)** = **Digital Output**

Selection
- Off
- Digital output AD 1
- Digital output AD 2
- Digital output AD 3
- Digital output AD 4

Factory setting Off

Additional information The **Digital output AD 1/2/3/4** options refer to the Advanced Diagnostic Blocks. A switch signal generated in these blocks can be transmitted via the switch output.

Assign limit

Navigation Setup → Advanced setup → Switch output → Assign limit

Prerequisite **Switch output function (→ 143)** = **Limit**

Selection
- Off
- Level linearized
- Distance
- Terminal voltage
- Electronic temperature
- Relative echo amplitude
- Area of incoupling

Factory setting Off

Assign diagnostic behavior

Navigation Setup → Advanced setup → Switch output → Assign diagnostic behavior

Prerequisite **Switch output function (→ 143)** = **Diagnostic behavior**

Description Defines to which behavior of diagnostic events the switch output reacts.

Selection
- Alarm
- Alarm or warning
- Warning

Factory setting Alarm

Switch-on value

Navigation Setup → Advanced setup → Switch output → Switch-on value

Prerequisite **Switch output function (→ 143) = Limit**

Description Defines the switch-on point. The output is closed if the assigned process variable rises above this point.

User entry Signed floating-point number

Factory setting 0

Additional information The switching behavior depends on the relative position of the **Switch-on value** and **Switch-off value** parameters:

Switch-on value > Switch-off value
- The output is closed if the measured value is larger than **Switch-on value**.
- The output is opened if the measured value is smaller than **Switch-off value**.

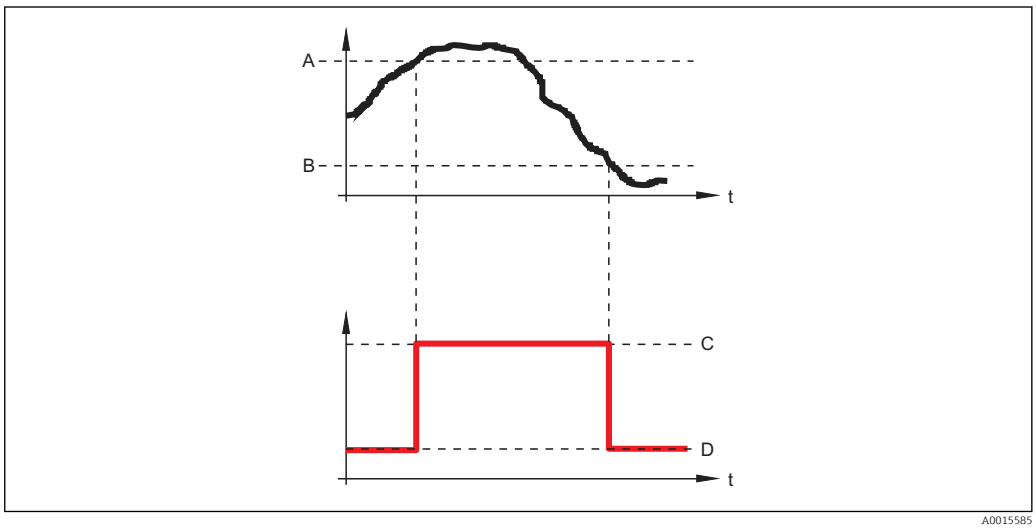

A Switch-on value
B Switch-off value
C Output closed (conductive)
D Output opened (non-conductive)

Switch-on value < Switch-off value
- The output is closed if the measured value is smaller than **Switch-on value**.
- The output is opened if the measured value is larger than **Switch-off value**.

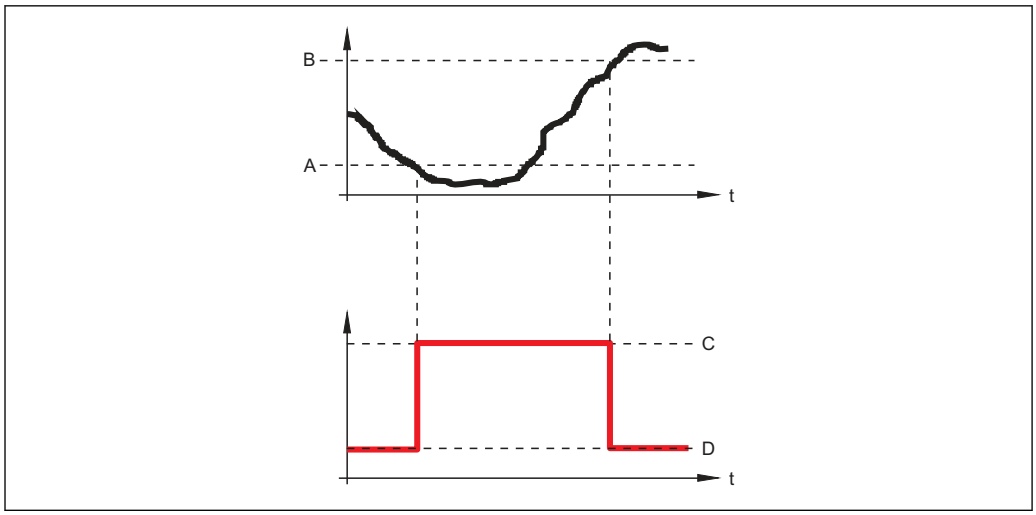

A Switch-on value
B Switch-off value
C Output closed (conductive)
D Output opened (non-conductive)

Switch-on delay

Navigation Setup → Advanced setup → Switch output → Switch-on delay

Prerequisite
- **Switch output function (→ 143) = Limit**
- **Assign limit (→ 144) ≠ Off**

Description Defines the delay applied before the output is switched on.

User entry 0.0 to 100.0 s

Factory setting 0.0 s

Switch-off value

Navigation Setup → Advanced setup → Switch output → Switch-off value

Prerequisite **Switch output function (→ 143) = Limit**

Description Defines the switch-off point. The output is opened if the assigned process variable falls below this point.

User entry Signed floating-point number

Factory setting 0

Additional information The switching behavior depends on the relative position of the **Switch-on value** and **Switch-off value** parameters; description: see the **Switch-on value** parameter (→ 145).

Switch-off delay

Navigation Setup → Advanced setup → Switch output → Switch-off delay

Prerequisite
- **Switch output function (→ 143)** = **Limit**
- **Assign limit (→ 144)** ≠ **Off**

Description Defines the delay applied before the output is switched off.

User entry 0.0 to 100.0 s

Factory setting 0.0 s

Failure mode

Navigation Setup → Advanced setup → Switch output → Failure mode

Prerequisite **Switch output function (→ 143)** = **Limit** or **Digital Output**

Description Defines the state of the switch output in case of an error.

Selection
- Actual status
- Open
- Closed

Factory setting Open

Additional information

Switch status

Navigation Setup → Advanced setup → Switch output → Switch status

Description Current status of the switch output.

Invert output signal

Navigation Setup → Advanced setup → Switch output → Invert output signal

Description 'No' The switch output behaves as per its parameter setting. 'Yes' The switching behavior is inverted as compared to its parameter setting.

Selection
- No
- Yes

Factory setting No

Additional information

Meaning of the options

- **No**
  The behavior of the switch output is as described above.
- **Yes**
  The states **Open** and **Closed** are inverted as compared to the description above.

"Display" submenu

The **Display** submenu is only visible if a display module is connected to the device.

Navigation Setup → Advanced setup → Display

Language

Navigation Setup → Advanced setup → Display → Language

Description Set display language.

Selection
- English
- Deutsch *
- Français *
- Español *
- Italiano *
- Nederlands *
- Portuguesa *
- Polski *
- русский язык (Russian) *
- Svenska *
- Türkçe *
- 中文 (Chinese) *
- 日本語 (Japanese) *
- 한국어 (Korean) *
- Bahasa Indonesia *
- tiếng Việt (Vietnamese) *
- čeština (Czech) *

Factory setting The language selected in feature 500 of the product structure.
If no language has been selected: **English**

Additional information

Format display

Navigation Setup → Advanced setup → Display → Format display

Description Select how measured values are shown on the display.

Selection
- 1 value, max. size
- 1 bargraph + 1 value
- 2 values
- 1 value large + 2 values
- 4 values

Factory setting 1 value, max. size

* Visibility depends on order options or device settings

Additional information

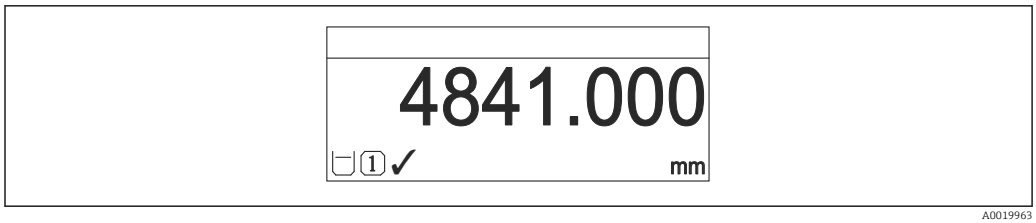

43 *"Format display" = "1 value, max. size"*

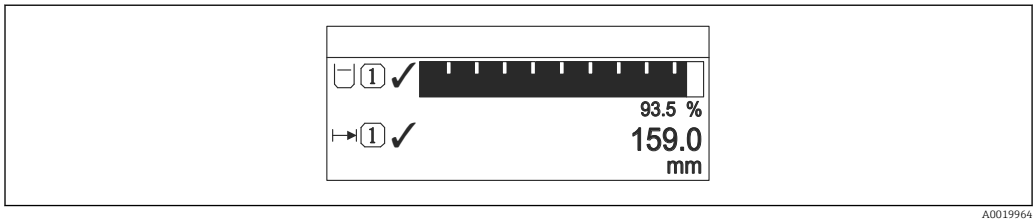

44 *"Format display" = "1 bargraph + 1 value"*

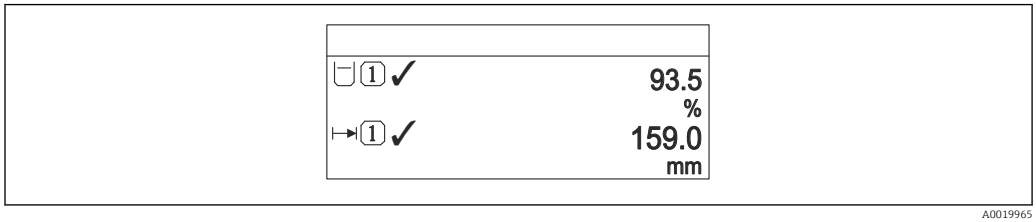

45 *"Format display" = "2 values"*

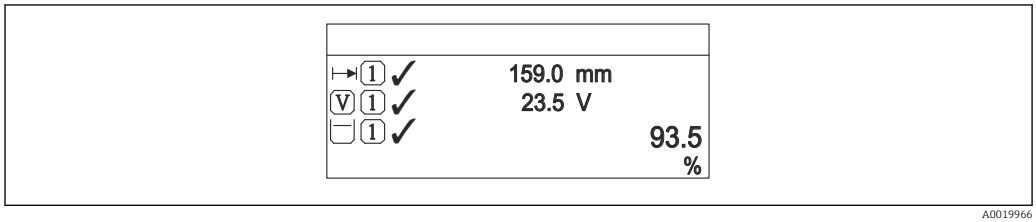

46 *"Format display" = "1 value large + 2 values"*

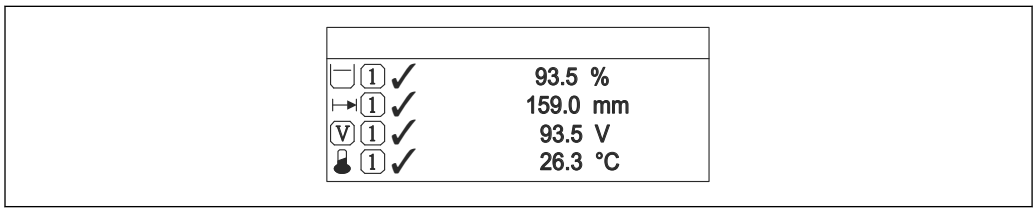

47 *"Format display" = "4 values"*

- The **Value 1 to 4 display** → 151 parameters specify which measured values are shown on the display and in which order.
- If more measured values are specified than the current display mode permits, the values alternate on the device display. The display time until the next change is configured in the **Display interval** parameter (→ 151).

Value 1 to 4 display

Navigation Setup → Advanced setup → Display → Value 1 display

Description Select the measured value that is shown on the local display.

Selection
- Level linearized
- Distance
- Absolute echo amplitude
- Relative echo amplitude
- Area of incoupling
- Current output 1
- Measured current
- Current output 2 *
- Terminal voltage
- Electronic temperature
- Analog output adv. diagnostics 1
- Analog output adv. diagnostics 2
- Analog output adv. diagnostics 3
- Analog output adv. diagnostics 4

Factory setting
- Value 1 display: Level linearized
- Value 2 display: None
- Value 3 display: None
- Value 4 display: None

Decimal places 1 to 4

Navigation Setup → Advanced setup → Display → Decimal places 1

Description This selection does not affect the measurement and calculation accuracy of the device.

Selection
- x
- x.x
- x.xx
- x.xxx
- x.xxxx

Factory setting x.xx

Additional information The setting does not affect the measuring or computational accuracy of the device.

Display interval

Navigation Setup → Advanced setup → Display → Display interval

Description Set time measured values are shown on display if display alternates between values.

* Visibility depends on order options or device settings

User entry 1 to 10 s

Factory setting 5 s

Additional information This parameter is only relevant if the number of selected measuring values exceeds the number of values the selected display format can display simultaneously.

Display damping

Navigation Setup → Advanced setup → Display → Display damping

Description Set display reaction time to fluctuations in the measured value.

User entry 0.0 to 999.9 s

Factory setting 0.0 s

Header

Navigation Setup → Advanced setup → Display → Header

Description Select header contents on local display.

Selection
- Device tag
- Free text

Factory setting Device tag

Additional information

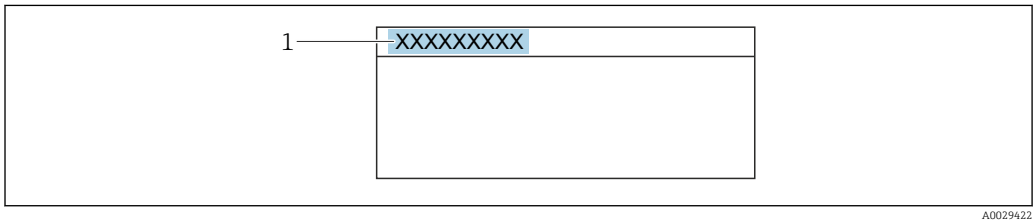

1 Position of the header text on the display

Meaning of the options

- **Device tag**
  Is defined in the **Device tag** parameter (→ 109)
- **Free text**
  Is defined in the **Header text** parameter (→ 153)

Header text

Navigation Setup → Advanced setup → Display → Header text

Prerequisite **Header (→ 152) = Free text**

Description Enter display header text.

Factory setting ----------

Additional information The number of characters which can be displayed depends on the characters used.

Separator

Navigation Setup → Advanced setup → Display → Separator

Description Select decimal separator for displaying numerical values.

Selection
- .
- ,

Factory setting .

Number format

Navigation Setup → Advanced setup → Display → Number format

Description Choose number format for the display.

Selection
- Decimal
- ft-in-1/16"

Factory setting Decimal

Additional information The **ft-in-1/16"** option is only valid for distance units.

Decimal places menu

Navigation Setup → Advanced setup → Display → Decimal places menu

Description Select number of decimal places for the representation of numbers within the operating menu.

Selection
- x
- x.x
- x.xx
- x.xxx
- x.xxxx

Factory setting
x.xxx

Additional information
- Is only valid for numbers in the operating menu (e.g. **Empty calibration**, **Full calibration**), but not for the measured value display. The number of decimal places for the measured value display is defined in the **Decimal places 1 to 4** → 📄 151 parameters.
- The setting does not affect the accuracy of the measurement or the calculations.

Backlight

Navigation
Setup → Advanced setup → Display → Backlight

Prerequisite
The device has the SD03 local display (with optical keys).

Description
Switch the local display backlight on and off.

Selection
- Disable
- Enable

Factory setting
Disable

Additional information
Meaning of the options
- **Disable**
  Switches the backlight off.
- **Enable**
  Switches the backlight on.

Regardless of the setting in this parameter the backlight may be automatically switched off by the device if the supply voltage is too low.

Contrast display

Navigation
Setup → Advanced setup → Display → Contrast display

Description
Adjust local display contrast setting to ambient conditions (e.g. lighting or reading angle).

User entry
20 to 80 %

Factory setting
Dependent on the display.

Additional information
Setting the contrast via push-buttons:
- Darker: press the ⊖ E buttons simultaneously.
- Brighter: press the ⊕ E buttons simultaneously.

"Configuration backup display" submenu

This submenu is only visible if a display module is connected to the device.

The configuration of the device can be saved to the display module at a certain point of time (backup). The saved configurateion can be restored to the device if required, e.g. in order to bring the device back into a defined state. The configuration can also be transferred to a different device of the same type using the display module.

Navigation Setup → Advanced setup → Configuration backup display

Operating time

Navigation Setup → Advanced setup → Configuration backup display → Operating time

Description Indicates how long the device has been in operation.

Additional information *Maximum time*

9 999 d (≈ 27 years)

Last backup

Navigation Setup → Advanced setup → Configuration backup display → Last backup

Description Indicates when the last data backup was saved to the display module.

Configuration management

Navigation Setup → Advanced setup → Configuration backup display → Configuration management

Description Select action for managing the device data in the display module.

Selection
- Cancel
- Execute backup
- Restore
- Duplicate
- Compare
- Clear backup data

Factory setting Cancel

Additional information

Meaning of the options

- **Cancel**
  No action is executed and the user exits the parameter.
- **Execute backup**
  A backup copy of the current device configuration in the HistoROM (built-in in the device) is saved to the display module of the device.
- **Restore**
  The last backup copy of the device configuration is copied from the display module to the HistoROM of the device.
- **Duplicate**
  The transmitter configuration is duplicated to another device using the transmitter display module. The following parameters, which characterize the individual measuring point are **not** included in the transmitted configuration:
  – HART date code
  – HART short tag
  – HART message
  – HART descriptor
  – HART address
  – Device tag
  – Medium type
- **Compare**
  The device configuration saved in the display module is compared to the current device configuration of the HistoROM. The result of this comparison is displayed in the **Comparison result** parameter (→ 156).
- **Clear backup data**
  The backup copy of the device configuration is deleted from the display module of the device.

While this action is in progress, the configuration cannot be edited via the local display and a message on the processing status appears on the display.

If an existing backup is restored to a different device using the **Restore** option, it may occur that some device functionalities are no longer available. In some cases even a device reset will not restore the original status.

In order to transmit a configuration to a different device, the **Duplicate** option should always be used.

Backup state

Navigation Setup → Advanced setup → Configuration backup display → Backup state

Description Displays which backup action is currently in progress.

Comparison result

Navigation Setup → Advanced setup → Configuration backup display → Comparison result

Description Comparison between present device data and display backup.

Additional information

Meaning of the display options

- **Settings identical**
  The current device configuration of the HistoROM is identical to the backup copy in the display module.
- **Settings not identical**
  The current device configuration of the HistoROM is not identical to the backup copy in the display module.
- **No backup available**
  There is no backup copy of the device configuration of the HistoROM in the display module.
- **Backup settings corrupt**
  The current device configuration of the HistoROM is corrupt or not compatible with the backup copy in the display module.
- **Check not done**
  The device configuration of the HistoROM has not yet been compared to the backup copy in the display module.
- **Dataset incompatible**
  The data sets are incompatible and can not be compared.

To start the comparison, set **Configuration management (→ 155)** = **Compare**.

If the transmitter configuration has been duplicated from a different device by **Configuration management (→ 155)** = **Duplicate**, the new device configuration in the HistoROM is only partially identical to the configuration stored in the display module: Sensor specific properties (e.g. the mapping curve) are not duplicated. Thus, the result of the comparison will be **Settings not identical**.

"Administration" submenu

Navigation Setup → Advanced setup → Administration

Define access code

Navigation Setup → Advanced setup → Administration → Define access code

Description Define release code for write access to parameters.

User entry 0 to 9 999

Factory setting 0

Additional information

If the factory setting is not changed or 0 is defined as the access code, the parameters are not write-protected and the configuration data of the device can then always be modified. The user is logged on in the *Maintenance* role.

The write protection affects all parameters marked with the symbol in this document. On the local display, the symbol in front of a parameter indicates that the parameter is write-protected.

Once the access code has been defined, write-protected parameters can only be modified if the access code is entered in the **Enter access code** parameter (→ 118).

Please contact your Endress+Hauser Sales Center if you lose your access code.

For display operation: The new access code is only valid after it has been confirmed in the **Confirm access code** parameter (→ 160).

Device reset

Navigation Setup → Advanced setup → Administration → Device reset

Description Reset the device configuration - either entirely or in part - to a defined state.

Selection

- Cancel
- To factory defaults
- To delivery settings
- Of customer settings
- To transducer defaults
- Restart device

Factory setting Cancel

Additional information

Meaning of the options

- **Cancel**
  No action
- **To factory defaults**
  All parameters are reset to the order-code specific factory setting.
- **To delivery settings**
  All parameters are reset to the delivery setting. The delivery setting may differ from the factory default if customer specific settings have been ordered.
  This option is only visible if customer specific settings have been ordered.
- **Of customer settings**
  All customer parameters are reset to their factory setting. Service parameters, however, remain unchanged.
- **To transducer defaults**
  Every measurment-related parameter is reset to its factory setting. Service parameters and communication-related parameters, however, remain unchanged.
- **Restart device**
  The restart resets every parameter which is stored in the volatile memory (RAM) to the factory setting (e.g. measured value data). The device configuration remains unchanged.

"Define access code" wizard

The **Define access code** wizard is only available when operating via the local display. When operating via an operating tool, the **Define access code** parameter is located directly in the **Administration** submenu. The **Confirm access code** parameter is not available for operation via operating tool.

Navigation Setup → Advanced setup → Administration → Define access code

Define access code

Navigation Setup → Advanced setup → Administration → Define access code → Define access code

Description → 158

Confirm access code

Navigation Setup → Advanced setup → Administration → Define access code → Confirm access code

Description Confirm the entered access code.

User entry 0 to 9 999

Factory setting 0

17.5 "Diagnostics" menu

Navigation Diagnostics

Actual diagnostics

Navigation Diagnostics → Actual diagnostics

Description Displays current diagnostic message.

Additional information The display consists of:
- Symbol for event behavior
- Code for diagnostic behavior
- Operating time of occurrence
- Event text

If several messages are active at the same time, the messages with the highest priority is displayed.

Information on what is causing the message, and remedy measures, can be viewed via the ⓘ symbol on the display.

Timestamp

Navigation Diagnostics → Timestamp

Description Displays the timestamp for the currently active diagnostic message.

Previous diagnostics

Navigation Diagnostics → Previous diagnostics

Description Displays the last diagnostic message which has been active before the current message.

Additional information The display consists of:
- Symbol for event behavior
- Code for diagnostic behavior
- Operating time of occurrence
- Event text

The condition displayed may still apply. Information on what is causing the message, and remedy measures, can be viewed via the ⓘ symbol on the display.

Timestamp

Navigation Diagnostics → Timestamp

Description Shows the timestamp of the previous diagnostic message.

Operating time from restart

Navigation Diagnostics → Operating time from restart

Description Displays the time the device has been in operation since the last device restart.

Operating time

Navigation Diagnostics → Operating time

Description Indicates how long the device has been in operation.

Additional information *Maximum time*
9 999 d (≈ 27 years)

17.5.1 "Diagnostic list" submenu

Navigation Diagnostics → Diagnostic list

Diagnostics 1 to 5

Navigation Diagnostics → Diagnostic list → Diagnostics 1

Description Display the current diagnostics messages with the highest to fifth-highest priority.

Additional information The display consists of:
- Symbol for event behavior
- Code for diagnostic behavior
- Operating time of occurrence
- Event text

Timestamp 1 to 5

Navigation Diagnostics → Diagnostic list → Timestamp

Description Timestamp of the diagnostic message.

17.5.2 "Event logbook" submenu

The **Event logbook** submenu is only available when operating via the local display. When operating via FieldCare, the event list can be displayed in the FieldCare function "Event List / HistoROM".

Navigation Diagnostics → Event logbook

Filter options

Navigation Diagnostics → Event logbook → Filter options

Description Define which category of event messages is shown in the Events list submenu.

Selection
- All
- Failure (F)
- Function check (C)
- Out of specification (S)
- Maintenance required (M)
- Information (I)

Factory setting All

Additional information
- This parameter is only used for operation via the local display.
- The status signals are categorized according to NAMUR NE 107.

"Event list" submenu

The **Event list** submenu displays the history of past events of the category selected in the **Filter options** parameter (→ 164). A maximum of 100 events are displayed in chronological order.

The following symbols indicate whether an event has occurred or has ended:
- : Event has occurred
- : Event has ended

Information on what is causing the message, and remedy instructions, can be viewed via the -button.

Display format
- For event messages in category I: information event, event text, "recording event" symbol and time the event occurred
- For event messages in category F, M, C, S (status signal): diagnostics event, event text, "recording event" symbol and time the event occurred

Navigation Diagnostics → Event logbook → Event list

17.5.3 "Device information" submenu

Navigation Diagnostics → Device information

Device tag

Navigation Diagnostics → Device information → Device tag

Description Enter the name for the measuring point.

Factory setting FMR6x

Serial number

Navigation Diagnostics → Device information → Serial number

Description Shows the serial number of the measuring device.

Additional information

Uses of the serial number
- To identify the device quickly, e.g. when contacting Endress+Hauser.
- To obtain specific information on the device using the Device Viewer: www.endress.com/deviceviewer

The serial number is also indicated on the nameplate.

Firmware version

Navigation Diagnostics → Device information → Firmware version

Description Shows the device firmware version installed.

User interface xx.yy.zz

Additional information For firmware versions differing only in the last two digits ("zz") there is no difference concerning functionality or operation.

Device name

Navigation Diagnostics → Device information → Device name

Description Shows the name of the transmitter.

Order code

Navigation Diagnostics → Device information → Order code

Description Shows the device order code.

Additional information The order code is generated from the extended roder code, which defines all device features of the product structure. In contrast, the device features can not be read directly from the order code.

Extended order code 1 to 3

Navigation Diagnostics → Device information → Extended order code 1

Description Display the three parts of the extended order code.

Additional information The extended order code indicates the version of all the features of the product structure and thus uniquely identifies the device.

Device revision

Navigation Diagnostics → Device information → Device revision

Description Shows the device revision with which the device is registered with the HART Communication Foundation.

Additional information The device revision is used to allocate the correct Device Description file (DD) to the device.

Device ID

Navigation Diagnostics → Device information → Device ID

Description Shows the device ID for identifying the device in a HART network.

Additional information In addition to the Device type and Manufacturer ID, the Device ID is part of the unique device identification (Unique ID) which characterizes each HART device unambiguously.

Device type

Navigation Diagnostics → Device information → Device type

Description Shows the device type with which the measuring device is registered with the HART Communication Foundation.

Additional information The device type is needed to allocate the suitable Device Description (DD) to the device.

Manufacturer ID

Navigation Diagnostics → Device information → Manufacturer ID

Description Use this function to view the manufacturer ID with which the measuring device is registered with the HART Communication Foundation.

User interface 2-digit hexadecimal number

Factory setting 0x11 (for Endress+Hauser)

17.5.4 "Measured values" submenu

Navigation Diagnostics → Measured values

Distance

Navigation Diagnostics → Measured values → Distance

Description Distance between lower edge of flange or thread and medium surface.

Additional information

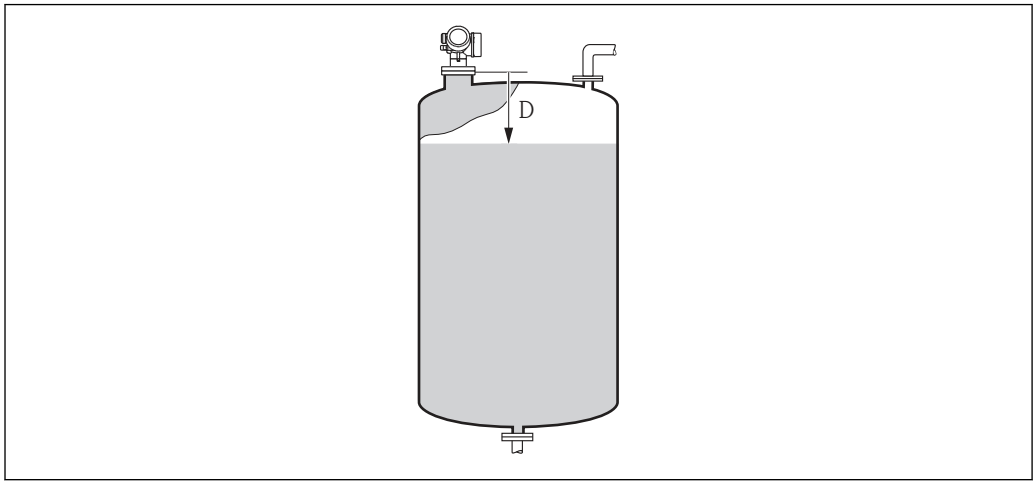

48 *Distance for liquid measurements*

Level linearized

Navigation Diagnostics → Measured values → Level linearized

Description Displays linearized level.

Additional information The unit is defined by the **Unit after linearization** parameter → 128.

Output current 1 to 2

Navigation Diagnostics → Measured values → Output current 1 to 2

Description Shows the actual calculated value of the output current.

Measured current 1

Navigation Diagnostics → Measured values → Measured current 1

Prerequisite Only available for current output 1

Description Shows the current value of the current output which is currently measured.

Terminal voltage 1

Navigation Diagnostics → Measured values → Terminal voltage 1

Description Shows the current terminal voltage that is applied at the output.

Sensor temperature

Navigation Diagnostics → Measured values → Sensor temperature

Description Indicates the current sensor temperature.

17.5.5 "Data logging" submenu

Navigation Diagnostics → Data logging

Assign channel 1 to 4

Navigation Diagnostics → Data logging → Assign channel 1 to 4

Description Assign a process variable to logging channel.

Selection
- Off
- Level linearized
- Distance
- Current output 1
- Measured current
- Current output 2 *
- Terminal voltage
- Electronic temperature
- Analog output adv. diagnostics 1
- Analog output adv. diagnostics 2
- Analog output adv. diagnostics 3
- Analog output adv. diagnostics 4

Factory setting Off

Additional information A total of 1000 measured values can be logged. This means:
- 1000 data points if 1 logging channel is used
- 500 data points if 2 logging channels are used
- 333 data points if 3 logging channels are used
- 250 data points if 4 logging channels are used

If the maximum number of data points is reached, the oldest data points in the data log are cyclically overwritten in such a way that the last 1000, 500, 333 or 250 measured values are always in the log (ring memory principle).

The logged data are deleted if a new option is selected in this parameter.

Logging interval

Navigation Diagnostics → Data logging → Logging interval
Diagnostics → Data logging → Logging interval

Description Define the logging interval tlog for data logging. This value defines the time interval between the individual data points in the memory.

User entry 1.0 to 3 600.0 s

Factory setting 30.0 s

* Visibility depends on order options or device settings

Additional information

This parameter defines the interval between the individual data points in the data log, and thus the maximum loggable process time T_{log}:

- If 1 logging channel is used: $T_{log} = 1000 \cdot t_{log}$
- If 2 logging channels are used: $T_{log} = 500 \cdot t_{log}$
- If 3 logging channels are used: $T_{log} = 333 \cdot t_{log}$
- If 4 logging channels are used: $T_{log} = 250 \cdot t_{log}$

Once this time elapses, the oldest data points in the data log are cyclically overwritten such that a time of T_{log} always remains in the memory (ring memory principle).

The logged data are deleted if this parameter is changed.

Example

When using 1 logging channel
- $T_{log} = 1000 \cdot 1\ s = 1\,000\ s \approx 16.5\ min$
- $T_{log} = 1000 \cdot 10\ s = 1\,000\ s \approx 2.75\ h$
- $T_{log} = 1000 \cdot 80\ s = 80\,000\ s \approx 22\ h$
- $T_{log} = 1000 \cdot 3\,600\ s = 3\,600\,000\ s \approx 41\ d$

Clear logging data

Navigation

Diagnostics → Data logging → Clear logging data

Diagnostics → Data logging → Clear logging data

Description

Clear the entire logging data.

Selection

- Cancel
- Clear data

Factory setting

Cancel

"Display channel 1 to 4" submenu

The **Display channel 1 to 4** submenus are only available for operation via the local display. When operating via FieldCare, the logging diagram can be displayed in the FieldCare function "Event List / HistoROM" .

The **Display channel 1 to 4** submenus invoke a diagram of the logging history of the respective channel.

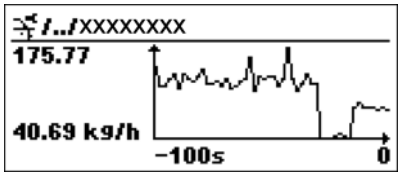

- x-axis: depending on the number of selected channels, 250 to 1000 measured values of a process variable are displayed.
- y-axis: covers the approximate measured value span and constantly adapts this to the measurement.

To return to the operating menu, press ⊞ and ⊟ simultaneaously.

Navigation Diagnostics → Data logging → Display channel 1 to 4

17.5.6 "Simulation" submenu

The **Simulation** submenu is used to simulate specific measuring values or other conditions. This helps to check the correct configuration of the device and connected control units.

Conditions which can be simulated

Condition to be simulated	Associated parameters
Specific value of a process variable	▪ Assign measurement variable (→ 🖹 175) ▪ Process variable value (→ 🖹 175)
Specific value of the output current	▪ Current output simulation (→ 🖹 175) ▪ Value current output (→ 🖹 176)
Specific state of the switch output	▪ Switch output simulation (→ 🖹 176) ▪ Switch status (→ 🖹 176)
Existence of an alarm	Device alarm simulation (→ 🖹 177)

Structure of the submenu

Navigation Diagnostics → Simulation

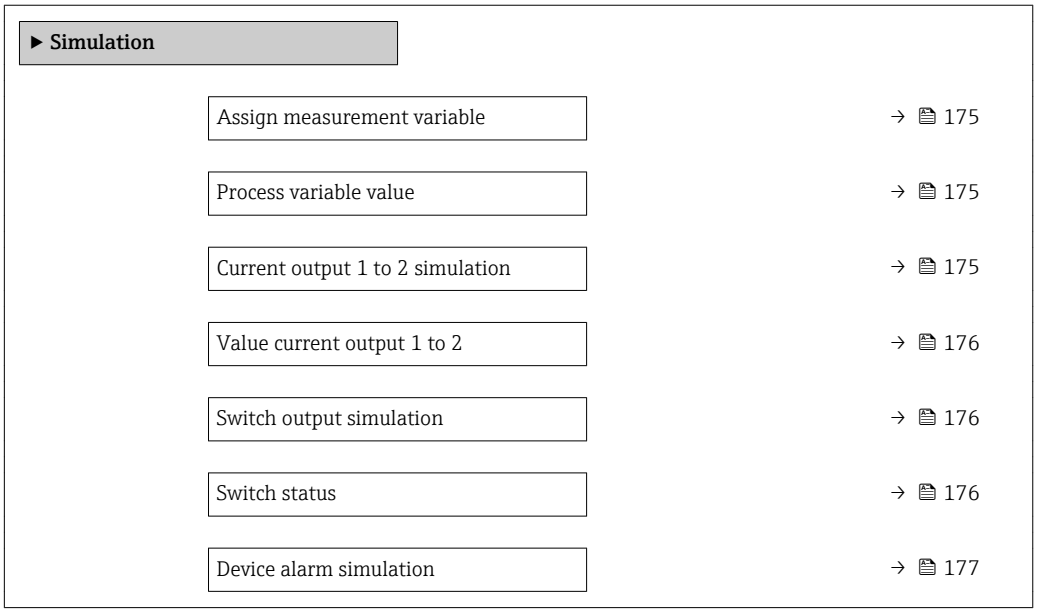

Description of parameters

Navigation Diagnostics → Simulation

Assign measurement variable

Navigation Diagnostics → Simulation → Assign measurement variable

Selection
- Off
- Level
- Level linearized

Factory setting Off

Additional information
- The value of the variable to be simulated is defined in the **Process variable value** parameter (→ 175).
- If **Assign measurement variable ≠ Off**, a simulation is active. This is indicated by a diagnotic message of the *Function check (C)* category.

Process variable value

Navigation Diagnostics → Simulation → Process variable value

Prerequisite **Assign measurement variable (→ 175) ≠ Off**

User entry Signed floating-point number

Factory setting 0

Additional information Downstream measured value processing and the signal output use this simulation value. In this way, users can verify whether the measuring device has been configured correctly.

Current output 1 to 2 simulation

Navigation Diagnostics → Simulation → Current output 1 to 2 simulation

Description Switch the simulation of the current output on and off.

Selection
- Off
- On

Factory setting Off

Additional information An active simulation is indicated by a diagnostic message of the *Function check (C)* category.

Value current output 1 to 2

Navigation Diagnostics → Simulation → Value current output 1 to 2

Prerequisite **Current output simulation (→ 175) = On**

Description Defines the value of the simulated output current.

User entry 3.59 to 22.5 mA

Factory setting 3.59 mA

Additional information The current output assumes the value specified in this parameter. In this way, users can verify the correct adjustment of the current output and the correct function of connected control units.

Switch output simulation

Navigation Diagnostics → Simulation → Switch output simulation

Description Switch the simulation of the switch output on and off.

Selection
- Off
- On

Factory setting Off

Switch status

Navigation Diagnostics → Simulation → Switch status

Prerequisite **Switch output simulation (→ 176) = On**

Description Current status of the switch output.

Selection
- Open
- Closed

Factory setting Open

Additional information The switch status assumes the value defined in this parameter. This helps to check correct operation of connected control units.

Device alarm simulation

Navigation Diagnostics → Simulation → Device alarm simulation

Description Switch the device alarm on and off.

Selection
- Off
- On

Factory setting Off

Additional information When selecting the **On** option, the device generates an alarm. This helps to check the correct output behavior of the device in the case of an alarm.

An active simulation is indicated by the diagnostic message **C484 Failure mode simulation**.

Diagnostic event category

Navigation Diagnostics → Simulation → Diagnostic event category

Description Select event category for the simulation.

Selection
- Sensor
- Electronics
- Configuration
- Process

Factory setting Process

Additional information Only events of the selected category are available in the selcetion list of the **Diagnostic event simulation** parameter (→ 177).

When operated via tool, all diagnostic messages are always available in **Diagnostic event simulation**. Therefore, **Diagnostic event category** appears only on the local display.

Diagnostic event simulation

Navigation Diagnostics → Simulation → Diagnostic event simulation

Description Select the diagnostic event to be simulated. Note: To terminate the simulation, select 'Off'.

Factory setting Off

Additional information When operated via the local display, the selection list can be filtered according to the event categories (**Diagnostic event category** parameter (→ 177)).

17.5.7 "Device check" submenu

Navigation Diagnostics → Device check

Start device check

Navigation Diagnostics → Device check → Start device check

Description **Yes** starts a device check.

Selection
- No
- Yes

Factory setting No

Additional information
- In case of an echo loss a device check cannot be performed.
- The minimum distance to the medium is 1.5 m (5 ft).

Result device check

Navigation Diagnostics → Device check → Result device check

Last check time

Navigation Diagnostics → Device check → Last check time

Description Indicates the operating time at which the last device check has been performed.

17.5.8 "Heartbeat" submenu

The **Heartbeat** submenu is only available via **FieldCare** or **DeviceCare**. It contains the wizards which are part of the **Heartbeat Verification** and **Heartbeat Monitoring** application packages.

Detailed description
SD01870F

Navigation Diagnostics → Heartbeat

Index

A

Access authorization to parameters
- Read access . . . 42
- Write access . . . 42

Access code . . . 42
- Incorrect input . . . 42

Access status display (Parameter) . . . 118
Access status tooling (Parameter) . . . 117
Accessories
- Communication specific . . . 88
- Device-specific . . . 83
- Service specific . . . 89

Activate table (Parameter) . . . 133
Actual diagnostics (Parameter) . . . 161
Administration (Submenu) . . . 158
Advanced setup (Submenu) . . . 117
Application . . . 10
Assign channel 1 to 4 (Parameter) . . . 170
Assign current output (Parameter) . . . 139
Assign diagnostic behavior (Parameter) . . . 144
Assign limit (Parameter) . . . 144
Assign measurement variable (Parameter) . . . 175
Assign status (Parameter) . . . 144

B

Backlight (Parameter) . . . 154
Backup state (Parameter) . . . 156
Blocking distance (Parameter) . . . 122, 135
Bluetooth® wireless technology . . . 38

C

CE mark . . . 11
Cleaning . . . 80
Clear logging data (Parameter) . . . 171
Code incorrect (Parameter) . . . 138
Comparison result (Parameter) . . . 156
Configuration backup display (Submenu) . . . 155
Configuration management (Parameter) . . . 155
Configuration of a level measurement . . . 62
Confirm access code (Parameter) . . . 160
Confirm distance (Parameter) . . . 112, 115
Context menu . . . 53
Contrast display (Parameter) . . . 154
Current output 1 to 2 (Submenu) . . . 139
Current output 1 to 2 simulation (Parameter) . . . 175
Current span (Parameter) . . . 140
Customer value (Parameter) . . . 133

D

Damping output (Parameter) . . . 141
Data logging (Submenu) . . . 170
DD . . . 55
Deactivate SIL/WHG (Wizard) . . . 138
Decimal places 1 (Parameter) . . . 151
Decimal places menu (Parameter) . . . 153
Declaration of Conformity . . . 11
Define access code . . . 42
Define access code (Parameter) . . . 158, 160
Define access code (Wizard) . . . 160
Designated use . . . 10
Device alarm simulation (Parameter) . . . 177
Device check (Submenu) . . . 178
Device Descriptions . . . 55
Device ID (Parameter) . . . 166
Device information (Submenu) . . . 165
Device name (Parameter) . . . 165
Device replacement . . . 81
Device reset (Parameter) . . . 158
Device revision (Parameter) . . . 166
Device tag (Parameter) . . . 109, 165
Device type (Parameter) . . . 167
Diagnostic event
- In the operating tool . . . 74

Diagnostic event category (Parameter) . . . 177
Diagnostic event simulation (Parameter) . . . 177
Diagnostic events . . . 71
Diagnostic list . . . 75
Diagnostic list (Submenu) . . . 163
Diagnostic message . . . 71
Diagnostics
- Symbols . . . 71

Diagnostics (Menu) . . . 161
Diagnostics 1 (Parameter) . . . 163
Diagnostics event . . . 72
Diameter (Parameter) . . . 130
DIP switch
- see Write protection switch

Display (Submenu) . . . 149
Display and operating module FHX50 . . . 37
Display channel 1 to 4 (Submenu) . . . 172
Display damping (Parameter) . . . 152
Display interval (Parameter) . . . 151
Display module . . . 47
Display symbols for submenus . . . 48
Display symbols for the locking state . . . 48
Disposal . . . 82
Distance (Parameter) . . . 112, 115, 168
Distance unit (Parameter) . . . 109
Document
- Function . . . 5

Document function . . . 5

E

Electronics housing
- Design . . . 14

Empty calibration (Parameter) . . . 110
Enter access code (Parameter) . . . 118
Envelope curve display . . . 54
Event history . . . 77
Event level
- Explanation . . . 71
- Symbols . . . 71

Event list (Submenu) 164
Event logbook (Submenu) 164
Event text 72
Events list 77
Extended order code 1 (Parameter) 166
Exterior cleaning 80

F
Failure current (Parameter) 142
Failure mode (Parameter) 141, 147
FHX50 37
Field of application
  Residual risks 10
Filter options (Parameter) 164
Filtering the event logbook 78
Firmware version (Parameter) 165
Fixed current (Parameter) 140
Format display (Parameter) 149
Free text (Parameter) 129
Full calibration (Parameter) 111
FV (HART device variable) 55

H
Hardware write protection 43
HART device variables 55
HART integration 55
HART protocol 39
Header (Parameter) 152
Header text (Parameter) 153
Heartbeat (Submenu) 179
Housing
  Design 14
  Turning 23

I
Input mask 51
Intermediate height (Parameter) 130
Invert output signal (Parameter) 147

K
Keypad lock
  Disabling 46
  Switching on 46

L
Language (Parameter) 149
Last backup (Parameter) 155
Last check time (Parameter) 178
Level (Parameter) 112, 132, 133
Level (Submenu) 119
Level correction (Parameter) 122
Level linearized (Parameter) 129, 168
Level measurement configuration 62
Level unit (Parameter) 121
Linearization (Submenu) 125, 126, 127
Linearization type (Parameter) 127
Local display 36
  see Diagnostics message
  see In alarm condition
Locking status (Parameter) 117
Logging interval (Parameter) 170

M
Maintenance 80
Manage device configuration 66
Manufacturer ID (Parameter) 167
Mapping (Wizard) 115
Mapping end point (Parameter) 114, 115
Max. draining speed liquid (Parameter) 120
Max. filling speed liquid (Parameter) 120
Maximum value (Parameter) 130
Measured current 1 (Parameter) 169
Measured value symbols 49
Measured values (Submenu) 168
Media 10
Medium group (Parameter) 110
Medium property (Parameter) 119
Medium type (Parameter) 119
Menu
  Diagnostics 161
  Setup 109

N
Number format (Parameter) 153

O
Operating elements
  Diagnostics message 72
Operating module 47
Operating time (Parameter) 155, 162
Operating time from restart (Parameter) 162
Operational safety 11
Order code (Parameter) 166
Output current 1 to 2 (Parameter) 142, 168
Output echo lost (Parameter) 134
Overvoltage protection
  General information 32

P
Prepare recording map (Parameter) 115
Present mapping (Parameter) 114
Previous diagnostics (Parameter) 161
Process variable value (Parameter) 175
Product safety 11
PV (HART device variable) 55

R
Ramp at echo lost (Parameter) 135
Read access 42
Record map (Parameter) 114, 115
Registered trademarks 9
Remedial measures
  Calling up 73
  Closing 73
Remote operation 39
Repair concept 81
Replacing a device 81
Requirements for personnel 10
Reset write protection (Parameter) 138
Result device check (Parameter) 178

Return 82

S

Safety instructions
Basic 10
Safety Instructions (XA) 12
Safety settings (Submenu) 134
Sensor temperature (Parameter) 169
Separator (Parameter) 153
Serial number (Parameter) 165
Service interface (CDI) 39
Setting the operating language 61
Settings
Manage device configuration 66
Operating language 61
Setup (Menu) 109
Signal quality (Parameter) 112
SIL/WHG confirmation (Wizard) 137
Simulation (Submenu) 174, 175
Spare parts 82
Nameplate 82
Start device check (Parameter) 178
Status signals 48, 71
Störungsbehebung 68
Submenu
Administration 158
Advanced setup 117
Configuration backup display 155
Current output 1 to 2 139
Data logging 170
Device check 178
Device information 165
Diagnostic list 163
Display 149
Display channel 1 to 4 172
Event list 164
Event logbook 164
Events list 77
Heartbeat 179
Level 119
Linearization 125, 126, 127
Measured values 168
Safety settings 134
Simulation 174, 175
Switch output 143
SV (HART device variable) 55
Switch output (Submenu) 143
Switch output function (Parameter) 143
Switch output simulation (Parameter) 176
Switch status (Parameter) 147, 176
Switch-off delay (Parameter) 147
Switch-off value (Parameter) 146
Switch-on delay (Parameter) 146
Switch-on value (Parameter) 145
Symbols
For correction 51
In the text and numeric editor 51
System components 90

T

Table mode (Parameter) 131
Table number (Parameter) 132
Tank type (Parameter) 109
Tank/silo height (Parameter) 122
Terminal voltage 1 (Parameter) 169
Timestamp (Parameter) 161, 162, 163
Transmitter
Turning the display 24
Turning the display module 24
Transmitter housing
Turning 23
Turning the display 24
Turning the display module 24
TV (HART device variable) 55

U

Unit after linearization (Parameter) 128
Use of the measuring device
see Designated use
Use of the measuring devices
Borderline cases 10
Incorrect use 10

V

Value 1 display (Parameter) 151
Value current output 1 to 2 (Parameter) 176
Value echo lost (Parameter) 134

W

W@M Device Viewer 82
Wizard
Deactivate SIL/WHG 138
Define access code 160
Mapping 115
SIL/WHG confirmation 137
Workplace safety 11
Write access 42
Write protection
Via access code 42
Via write protection switch 43
Write protection switch 43



www.addresses.endress.com

Endress+Hauser

People for Process Automation