Technical Information
Micropilot S FMR532

Level-Radar
Level transmitter for continuous and non-contact precision level measurement



For custody transfer and inventory control applications with NMi- and PTB-approvals.

Application
The Micropilot S is used for highly accurate level measurement in storage tanks and can be applied in custody transfer applications. It meets the relevant requirements according to OIML R85 and API 3.1B.

The FMR532 with planar antenna is suited exclusively for stilling well applications with measuring ranges up to 38 m (125 ft).

Your benefits
- 0.8 mm (0.03 in) precision (2σ value)
- National approvals (NMi, PTB) for custody transfer.
- Easy integration into tank gauging systems via the Tank Side Monitor NRF590.
- Easy on-site operation via menu-driven alphanumeric display.
- Easy commissioning, documentation and maintenance via FDT/DTM technology (FieldCare).
- Planar antenna versions allow direct installation on tapered stilling wells.
- Low-cost, easy installation via 4-wire cable with HART and 24 V DC (intrinsically safe).
- Gas-tight process connection (second line of defense) standard for any antenna version.
- Inventory Control version with reduced accuracy (3 mm [0.12 in]) available for all device versions.

Endress+Hauser
People for Process Automation

Table of contents

Document information 3
Document conventions 3

Function and system design 5
Measuring principle 5
Equipment architecture 6
Custody transfer applications 7
Integrated in tank gauging system 7

Input 8
Measured variable 8
Measuring range 8
Blocking distance 9

Output 10
Output signal 10
Signal on alarm 10
Load 10
Linearization 10
Galvanic isolation 10

Power supply 11
Terminal assignment 11
Supply voltage 12
Power consumption 12
Current consumption 12
Electrical connection 13
Cable entry 13
Ripple HART 13
Max. noise HART 13
Overvoltage protector 13
Power supply 13
Highly accurate measurement 13

Performance characteristics 14
Reference operating conditions 14
Maximum measured error 14
Resolution 14
Settling time 14
Hysteresis 14
Non-repeatability 14
Reaction time 14
Long-term drift 14
Influence of ambiente temperature 14
Proof of accuracy of custody transfer versions 14
Maximum fill speed 14
Software reliability 14
Inventory control versions 14

Installation 15
Installation conditions 15
Installation instructions 15
Measuring conditions 16
Behaviour if measuring range is exceeded 16
Example of stilling well construction 17

Environment 19
Ambient temperature range 19
Storage temperature 19
Climate class 19
Degree of protection 19
Vibration resistance 19
Cleaning of the antenna 19
Electromagnetic compatibility (EMC) 19
Approvals for custody transfer applications 19

Process 19
Process temperature range 19
Process pressure limits 19
Dielectric constant 19

Mechanical construction 20
Design, dimensions 20
Weight 21
Materials 22
Type plate for custody transfer applications 24
Endress+Hauser UNI flange 25

Operability 27
Operation concept 27
Local operation 27
Remote operation 28
Display elements 30
Operating elements 31

Certificates and approvals 32
CE approval 32
C-Tick symbol 32
Ex approval 32
Overfill prevention 32
RF approvals 32
CRN approvals 32
Custody type approval 32
External standards and guidelines 32

Ordering information 33
Ordering information 33
Scope of delivery 33

Accessories 34
Device-specific accessories 34
Communication-specific accessories 35
Service-specific accessories 36

Supplementary Documentation 37
Standard documentation 37
Supplementary device-dependent documentation 37
Safety Instructions 37

Document information

Document conventions

Safety symbols

Symbols	Meaning
 A0011189-EN	**DANGER!** This symbol alerts you to a dangerous situation. Failure to avoid this situation will result in serious or fatal injury.
 A0011190-EN	**WARNING!** This symbol alerts you to a dangerous situation. Failure to avoid this situation can result in serious or fatal injury.
 A0011191-EN	**CAUTION!** This symbol alerts you to a dangerous situation. Failure to avoid this situation can result in minor or medium injury.
 A0011192-EN	**NOTICE!** This symbol contains information on procedures and other facts which do not result in personal injury.

Electrical symbols

Symbols	Meaning
A0018335	**Direct current** A terminal at which DC voltage is present or through which direct current flows.
A0018336	**Alternating current** A terminal at which AC voltage is present or through which alternating current flows.
 A0018337	**Direct current and alternating current** ▪ A terminal at which AC voltage or DC voltage is present. ▪ A terminal through which alternating current or direct current flows.
 A0018338	**Ground connection** A grounded terminal which, from the operator's point of view, is grounded via a grounding system.
 A0018339	**Protective ground connection** A terminal that must be connected to ground before establishing other connections.
 A0011201	**Equipotential connection** A connection that must be made with the plant grounding system. This could, for example, be a potential matching line or a star-shaped grounding system, depending on national or company codes of practice.

Symbols for certain types of information

Symbols	Meaning
 A0011182	**Allowed** Indicates procedures, processes or actions that are allowed.
 A0011183	**Preferred** Indicates procedures, processes or actions that are preferred.
 A0011184	**Forbidden** Indicates procedures, processes or actions that are forbidden.
 A0011193	**Tip** Indicates additional information.
 A0015483	**Reference to documentation** Refers to the relevant device documentation.

 A0015484	**Reference to page** Refers to the relevant page number.
 A0015486	**Reference to diagrams** Refers to the relevant graphic number and page number.
1. , 2. , ...	Series of steps
 A0015488	**Help in the event of a problem**

Symbols in graphics

Symbols	Meaning
1, 2, 3, 4, ...	Numbering for main positions
1. , 2. , ...	Series of steps
A, **B**, **C**, **D**, ...	Views
A-A, **B-B**, ...	Sections
 A0011187	**Hazardous area** Indicates a hazardous area.
 A0011188	Safe area (non-hazardous area) Indicates a non-hazardous area.

Function and system design

Measuring principle

The Micropilot is a "downward-looking" measuring system, operating based on the time-of-flight method. It measures the distance from the reference point (process connection) to the product surface. Radar impulses are emitted by an antenna, reflected off the product surface and received again by the radar system.

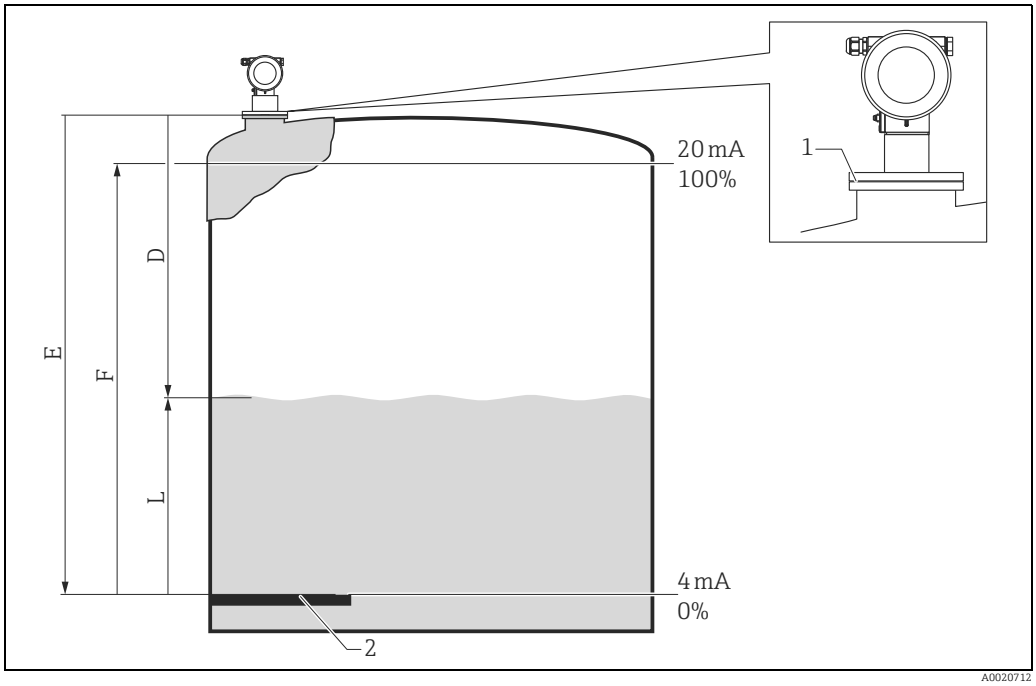

1 GRH reference point of measurement (bottom edge of flange or threaded connection)
2 Level zero point (gauge reference plate)

E Empty calibration (= zero point)
F Full calibration (= span)
D Distance measured
L Level (L = E – D)

Input

The reflected radar impulses are received by the antenna and transmitted into the electronics.
A microprocessor evaluates the signal and identifies the level echo caused by the reflection of the radar impulse at the product surface.
The unambiguous signal identification is accomplished by the PulseMaster® software, based on many years of experience with time-of-flight technology. The mm-accuracy of the Micropilot S could be achieved with the patented algorithms of the PulseMaster® software.

The distance "D" to the product surface is proportional to the time of flight "t" of the impulse:

$D = c \cdot t/2$,
with "c" being the speed of light.

Based on the known empty distance "E", the level "L" is calculated:

$L = E - D$

Refer to the above figure for the reference point for "E". The stability of the reference point for the measurement (GRH) has a decisive influence on the accuracy of the measurement!
The Micropilot is equipped with functions to suppress interference echoes. The user can activate these functions. They ensure that interference echoes (i.e. from edges and weld seams) are not interpreted as level echoes. They ensure that interference echoes (i.e. from edges and weld seams) are not interpreted as level echo.

Output

The Micropilot is commissioned by entering an empty distance "E" (= zero), a full distance "F" (= span) and an application parameter. The application parameter automatically adapts the device to the process conditions. The data points "E" and "F" correspond with 4 mA and 20 mA for devices with current output. They correspond with 0 % and 100 % for digital outputs and the display module. For inventory control or custody transfer applications, the measurement should always be transferred via digital communication (HART).
A linearization with max. 32 points, based on a table entered either manually or semi-automatically, can be activated locally or remotely. This function allows, for example, measurement in engineering units and provides a linear output signal for spherical and horizontal cylindrical tanks, or tanks with a conical outlet.

Equipment architecture

Stand-alone

- The device has a passive 4-20 mA output with HART protocol.
- Reliable transmission of measurements with mm precision is guaranteed only by the HART protocol.

4-20 mA output with HART protocol

The complete measuring system consists of:

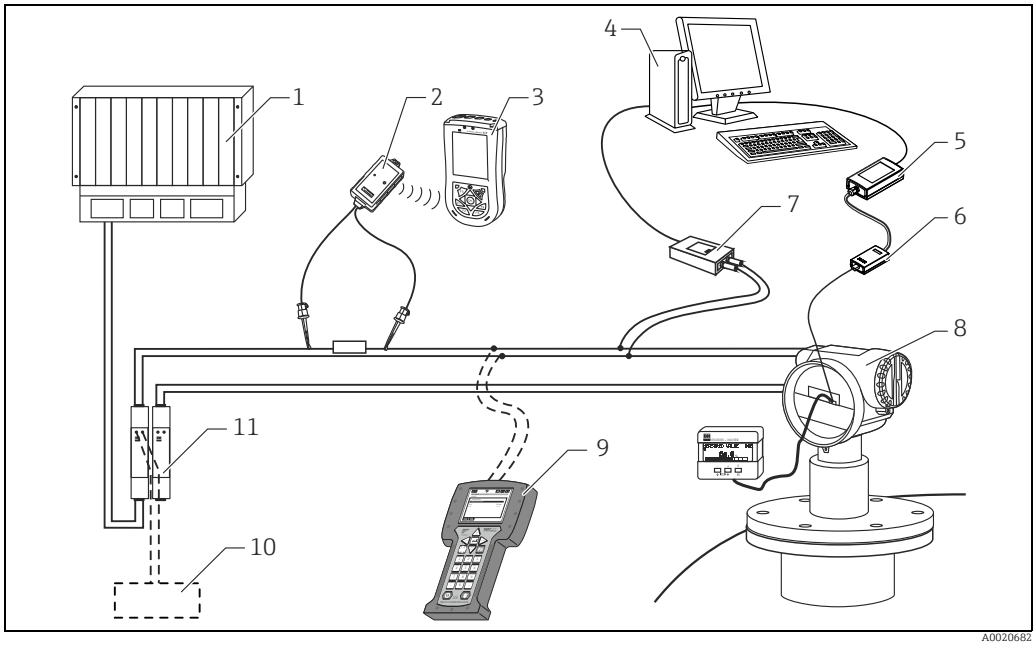

1 PLC (programmable logic controller)
2 VIATOR Bluetooth modem with connecting cable
3 Field Xpert
4 Computer with operating tool (e.g. FieldCare)
5 Commubox FXA291
6 ToF adapter FXA291
7 Commubox FXA195 (USB)
8 Micropilot with display module
9 Field Communicator 475
10 FXA195 or Field Communicator 475
11 Transmitter power supply unit RN221N (with communication resistor)

Local operation

- with display and operating module VU331,
- with a Personal Computer, Commubox FXA291 with ToF Adapter FXA291 (USB) and the operating software "FieldCare". FieldCare is a graphical operating software for measuring devices from Endress+Hauser (radar, ultrasonic, guided micropulses). It assists with commissioning, securing data, signal analysis and documentation of the measuring point.

Remote operation

- with Field Communicator 475
- with Field Xpert
- with a personal computer, Commubox FXA195 and "FieldCare" operating software

Integration into the Asset Management System

The HART interface allows the integration into the AMS® (Asset Management System) from Fisher-Rosemount.

Custody transfer applications

The Micropilot S is suitable for custody transfer and inventory control applications. The on-site testing has to be done in compliance with the applicable regulatory standards. The Micropilot S can be sealed after successful on-site calibration to be protected against any access to the electronics compartment and any changes of software settings. If the Micropilot S is used for custody transfer or inventory control, any temperature influence on the tank shell hight can be compensated for using the Tank Side Monitor (TSM). In addition, the vertical movement of the gauge reference point due to the hydrostatic tank deformation can be compensated in the Tank Side Monitor. A Tank Side Monitor can provide 24 V DC for a Micropilot S. The Tank Side Monitor can communicate with up to 6 devices via HART Multidrop.

Integrated in tank gauging system

The Endress+Hauser Tank Side Monitor NRF590 provides integrated communications for sites with multiple tanks, each with one or more sensors on the tank, such as radar, spot or average temperature, capacitive probe for water detection and/or pressure sensors. Multiple protocols out of the Tank Side Monitor guarantee connectivity to nearly any of the existing industry standard tank gauging protocols. Optional connectivity for 4-20 mA sensors, digital I/O and analog outputs facilitate full integration of all sensors at the tank. Use of the proven concept of the intrinsically safe HART bus (HART multidrop) for all on-tank sensors yields extremely low wiring costs, while at the same time providing maximum safety, reliability and data availability.

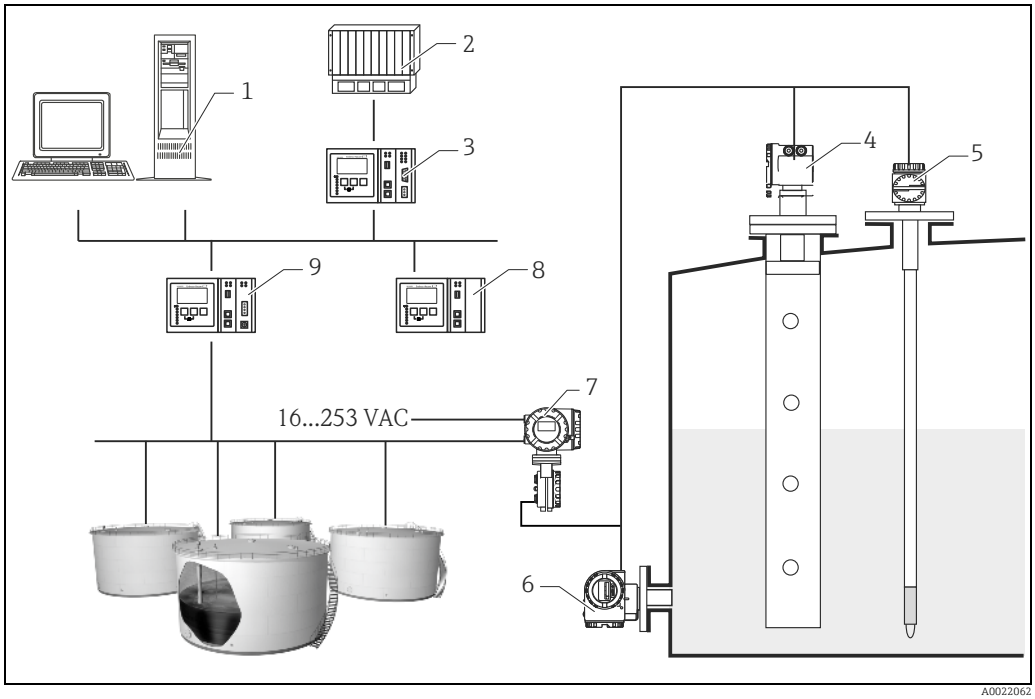

1 Tankvision workstation
2 Process control system
3 Host Link
4 Micropilot S
5 Prothermo
6 Pressure transmitter
7 Tank Side Monitor
8 Data Concentrator
9 Tankvision Tank Scanner NXA820

Input

Measured variable

The measured variable is the distance between a reference point GRH (mounting flange) and a reflective surface (e.g. product surface). The measured value and all parameters are displayed using either metrical SI-units or US/UK-units (inch, ft, ...).
The level is calculated based on the tank height entered.
To compensate for non-linear effects such as movement of the tank roof, a correction table (dip chart) can also be entered.

Measuring range

The usable measuring range depends on the size of the antenna, the reflectivity of the medium, the mounting location, and eventual interference reflections.
The following tables describe the groups of media as well as the achievable measuring range as a function of application and media group. If the dielectric constant of a medium is unknown, it is recommended to assume media group **B** to ensure a reliable measurement.

Media group	DC (Εr)	Examples
A	1.4 to 1.9	Non-conducting liquids, e.g. liquefied gas (LPG). For more information, please contact your Endress+Hauser sales center.
B	1.9 to 4	Non-conducting liquids, e.g. gasoline, oil, toluene, white products, crude oil, bitumen, asphalt, ...
C	4...10	e.g. concentrated acids, organic solvents, esters, aniline, alcohol, acetone, ...
D	> 10	Conducting liquids, e.g. aqueous solutions, diluted acids and alkalies

Media group		Stilling well/ Bypass
		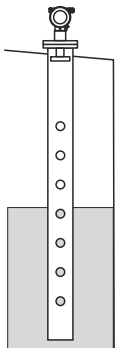 A0020746
		Measuring range
		FMR532 ≥ DN150
A	DC (Εr) = 1.4 to 1.9	38 m (125 ft)
B	DC (Εr) = 1.9 to 4	
C	DC (Εr) = 4 to 10	
D	DC (Εr) > 10	
Max. measuring range with custody transfer approval		NMi: 25 m (82 ft) PTB: 30 m (98 ft)

Blocking distance

The blocking distance (= BD) is the minimum distance form the reference point of the measurement (mounting flange) to the medium surface at maximum level.

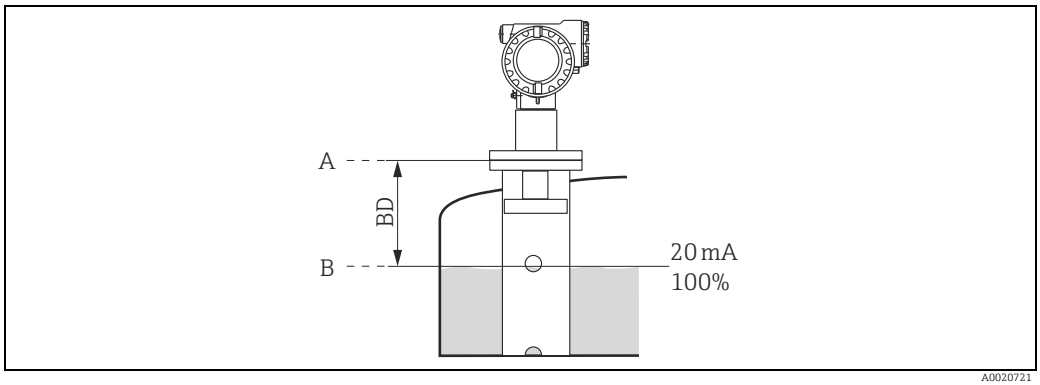

A *Reference point of measurement*
B *Maximum level*

Blocking distance (BD)[1)]	Stilling well/ Bypass
from flange	1 m (3.3 ft) (→ 20)

1) 1 mm (0.04 in) accuracy under reference conditions

Inside the blocking distance, a reliable measurement can not be guaranteed.

Output

Output signal

4-20 mA (invertible) with HART protocol (e.g. for multi drop connection to Tank Side Monitor NRF590): This version can be operated using the PC operating software FieldCare. The device supports both point-to-point and multidrop operation. For measurements with mm precision, the measured value must be transmitted using the HART protocol to ensure the necessary resolution.

Order code in Product Configurator under "Output; Operation": Version A (4-line display VU331, envelope curve display on site)

Signal on alarm

Error information can be accessed via the following interfaces:
- Local display:
  - Error symbol
  - Plain text display
  - LED's: red LED continuously on = alarm, red LED flashes = warning
- Current output
- Digital interface

Load

Min. load for HART communication: 250 Ω

Linearization

The linearization function of the Micropilot S allows the conversion of the measured value into any unit of length or volume. Linearization tables for calculating the volume in cylindrical tanks are pre-programmed. Other tables of up to 32 value pairs can be entered manually or semi-automatically.

Galvanic isolation

500 V towards:
- power supply and ground
- power supply and signal

Power supply

Terminal assignment

4-20 mA with HART

The 4-wire cable is connected to the screw terminals (wire diameters 0.5 to 2.5 mm^2 [20 to 14 AWG]) in the terminal compartment. Use 4-wire twisted pair cable with screen for the connection. Protective circuitry against reverse polarity, RFI, and over-voltage peaks is built into the device (TI00241F/00/EN, "basics for EMC-tests").

Connection to Tank Side Monitor NRF590

The Micropilot S may be connected, together with other devices in a hazardous area, to a Tank Side Monitor. In this case, it is recommended that the shielding on the cables be grounded centrally at the Tank Side Monitor and that all devices be connected to the same potential matching line (PML). If, for functional reasons, a capacitive coupling is required between the local ground and the shield (multiple grounding), ceramic capacitors with a minimum dielectric strength of 1500 Veff must be used. The overall capacity of 10 nF must not be exceeded in this case. The FISCO model provides information on grounding intrinsically safe, interconnected devices.
If it is not possible to lay a grounding cable between the NRF590 and the Micropilot S, it is possible to ground on one side at the NRF590. In this case, it is essential that the cable shield on the Micropilot S be grounded using a ceramic capacitor with a maximum capacitance of 10 nF and a minimum isolation voltage of 1500 V.

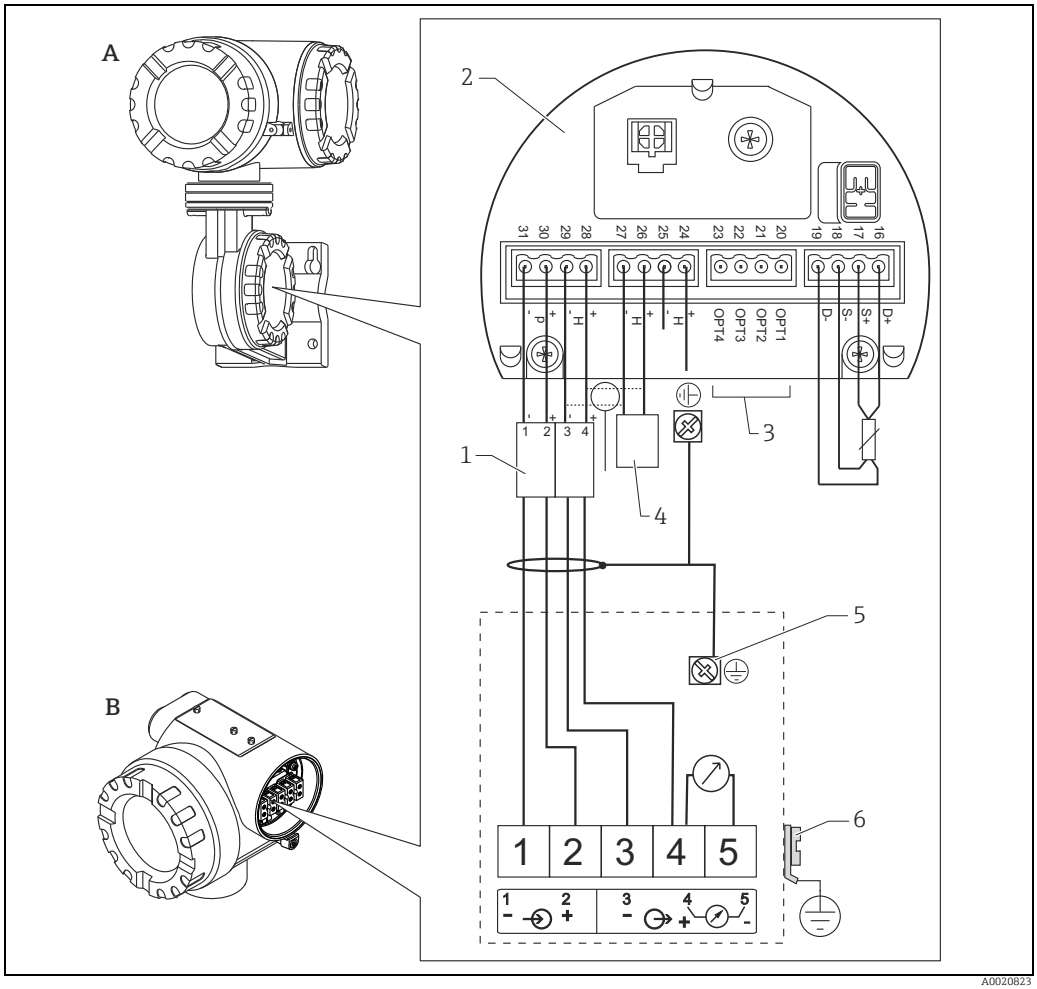

A Tank Side Monitor NRF590
B Micropilot S
1 For Micropilot S only
2 Intrinsically safe terminal strip
3 Shield, grounded on one side at Tank Side Monitor NRF590
4 HART sensor
5 Shielding cable
6 PAL (potential matching line)

Connection as a stand-alone device

The Micropilot S located in a hazardous area is connected as a stand-alone device to a power supply unit and transmitter located outside the hazardous area. In this case, it is recommended that the shielding directly on the Micropilot be connected to the housing ground; the Micropilot S and the supply unit are connected to the same potential matching line (PML).

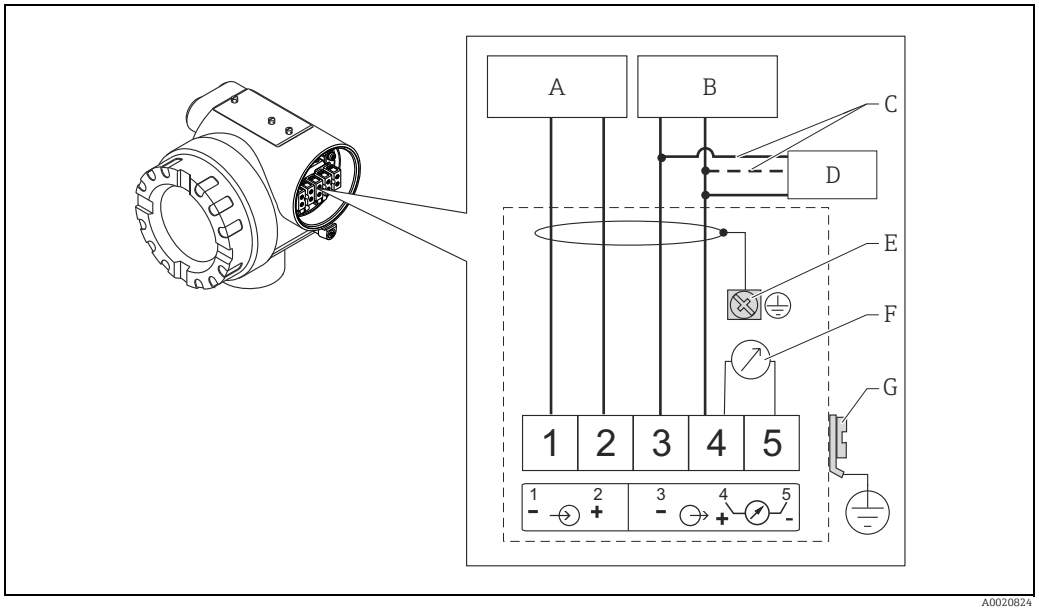

A Power supply 24 VDC; provided by a supply unit
B Signal 24 VDC; provided by a supply unit
C Alternative connection
D Commubox FXA195, Field Communicator
E Shielding cable
F Test socket; Output current
G PML (potential matching line)

Supply voltage

DC voltage: see the following table

Communication		Terminal voltage	minimum	maximum
Power supply	Standard	U (20 mA) =	16 V	36 V
	Ex	U (20 mA) =	16 V	30 V
Signal	Ex	U (4 mA) =	11.5 V	30 V
		U (20 mA) =	11.5 V	30 V

Power consumption

- max. 330 mW at 16 V
- max. 500 mW at 24 V
- max. 600 mW at 30 V
- max. 700 mW at 36 V

Current consumption

Max. 21 mA (50 mA inrush current)

Electrical connection

The housing features a separate terminal compartment.

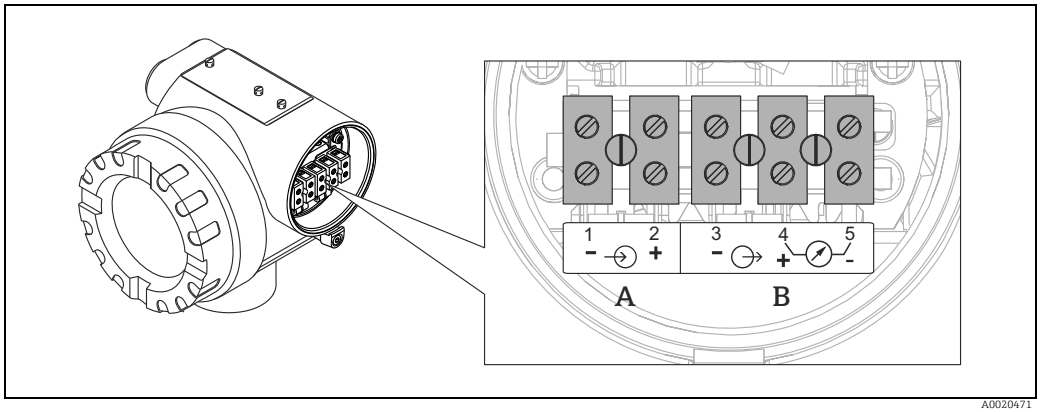

A Power supply
B Voltage

Cable entry

Designation	Version*
Cable gland M20 Plastics M20x1.5 for cable ϕ 5 to 10 mm (0.2 to 0.39 in)	2
Thread for cable entry G ½"	3
Thread for cable entry NPT ½"	4

* Order code in Product Configurator (→ 🖹 33)

Ripple HART

47 to 125 Hz: Uss = 200 mV (at 500 Ω)

Max. noise HART

500 Hz to 10 kHz: Ueff = 2.2 mV (at 500 Ω)

Overvoltage protector

- The level transmitter Micropilot S is equipped with an internal overvoltage protector (600 Vrms surge arrester) according to EN/IEC 60079-14 or EN/IEC 60060-1 (impulse current test 8/20 s, $\hat{I}$ = 10 kA, 10 pulses). Additionally, the device is protected by a galvanic insulation of 500 Vrms between the power supply and the (HART) current ouput. Connect the metallic housing of the Micropilot S to the tank wall or screen directly with an electrically conductive lead to ensure reliable potential matching.
- Installation with additional overvoltage protection HAW560Z/HAW562Z (see XA00081F, "Safety instructions for electrical apparatus certified for use in explosion-hazardous areas").
  - Connect the external overvoltage protector and the Micropilot S transmitter to the local potential matching system.
  - Potentials shall be equalised both inside and outside the explosion hazardous area.
  - The cable connecting the overvoltage protection and the Micropilot S level transmitter must not exceed 1 m (3.3 ft) in length; the cable must be protected e.g. routed through a metal tube.

Power supply

- For stand alone operation recommended via two Endress+Hauser RN221N.
- Integrated in tank gaugigng systems via Endress+Hauser Tank Side Monitor NRF590 (recommended).

Highly accurate measurement

For highly accurate measurements the measured variable must be transmitted using HART protocol to ensure the necessary resolution.

Performance characteristics

For accuracy data for devices suitable for custody transfer measurement in accordance with OIML R85, see Ambient temperature range. → 19.

Reference operating conditions

According to OIML R85:
- Temperature: -25 °C to +55 °C (-13 °F to +131 °F)
- Atmospheric pressure
- Relative humidity (air): 65 % ±15 %
- Medium properties: e.g. medium with good reflectivity and calm surface
- Tank diameter: signal beam hits the tank wall only at one side
- No major interference reflections inside the signal beam

Maximum measured error

Absolute accuracy: better than ±1 mm (0.04 in)

Micropilot S versions for free space applications typically provide accuracy of ±0.8 mm (0.03 in), (2 sigma value). Depending on national calibration regulations, the permitted errors **after** the device has been installed on the tank are ±3 mm (0.12 in), (OIML, API)....

Resolution

- Digital: 0.1 mm
- Analog: 0.03 % of measuring range

Settling time

Typical: 15 sec

Hysteresis

0.3 mm (0.01 in)

Non-repeatability

0.3 mm (0.01 in)

Reaction time

The reaction time depends on the parameter settings (min. 1 s).
In case of fast level changes, the device needs the reaction time to indicate the new value.

Long-term drift

The long-term drift is within the specified accuracy.

Influence of ambiente temperature

Within the specified accuracy according to OIML R85.

Proof of accuracy of custody transfer versions

The accuracy of each Micropilot S is confirmed by a calibration certificate that records the absolute and relative error at 10 measuring points during the final test.
A Laser Interferometer (Jenaer Messtechnik ZLM 500) with an absolute accuracy of 0.1 mm is used as a reference for free space measurements with the FMR530/533.
For stilling well measurements with the FMR532, NMI / PTB calibrated steel measuring tapes with an absolute accuracy of 0.25 mm are used as a reference.
Each Micropilot S also comes with PTB and NMi type approvals to confirm suitability for custody transfer measurement. In addition, certificates confirming initial verification are available on request for all Micropilot S radar devices.

Maximum fill speed

By the first pass trough of measuring range: 100 mm/min., thereafter unlimited.

Software reliability

The software used in the radar device Micropilot S fulfills the requirements of OIML R85. This particularly includes:
- Cyclical testing of data consistency
- Non-volatile memory
- Segmented data storage

The radar device Micropilot S continuously monitor the compliance with accuracy requirements for custody transfer measurements according to OIML R85. If the accuracy cannot be maintained, a specific alarm is generated on the local display and via the digital communication (→ 30).

Inventory control versions

All device versions can be delivered as "Inventory Control" versions with reduced accuracy (±3 mm [0.12 in]) under reference conditions. **No** calibration certificate or type approval is supplied with these versions.
Order code in the Product Configurator under "Weight + measure approval", Version "R" → 19

Installation

Installation conditions

Standard installation

- No alignment is required.
- After mounting, the housing can be turned 350° in order to simplify access to the display and the terminal compartment.
- Planar axis vertical to flange.
- Measurements can be performed through an open ball valve without any problems.

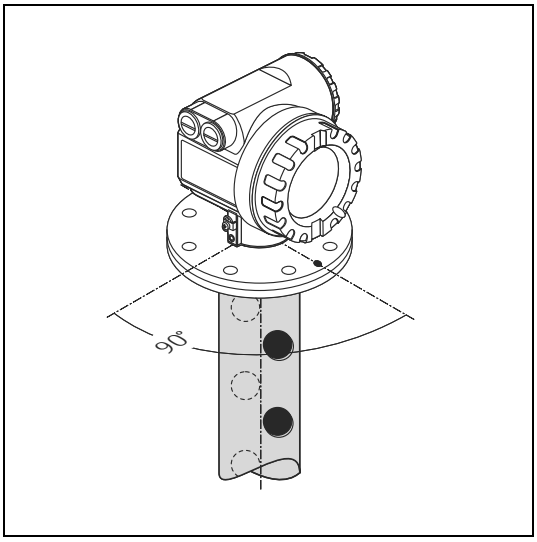

A0020685

Installation instructions

The planar stilling well antenna is specially designed for stilling well applications only. The emitted circular mode radar pattern is a must for high accuracy applications on stilling wells. This special mode allows the software to compensate for variations of the inside diameter of the stilling well and layering of adhering product. The diameter of the antenna itself fits in DN150 (6") stilling wells directly. Cone adapters allow installation on larger diameter stilling wells. A good match between well and adapter is essential. The Micropilot S with planar antenna can even be installed directly onto conical stilling wells and thereby often makes modifications of the stilling well unnecessary.

Recommendations for the stilling well

- Metal (no enamel coating, plastic on request).
- Constant diameter.
- When using a FMR532, an increase of the pipe diameter from DN150 to DN200 / DN200 to DN250 / DN250 to DN300 is acceptable. A larger step-width for the increase of the pipe diameter (e.g. DN150 to DN300) is possible if the upper part of the pipe has a suitable length. The length of the stilling well extension must be observed (see table, → 17).
  If the length (see Fig. → 18) is less than "L", please contact Endress+Hauser to determine a suitable antenna adapter (separable antenna horn). We recommend a minimum length of 0.5 m (1.6 ft) between the upper end of the well and the extension. Ideally, a nozzle for manual gauging is used.
- Any rectangular increase of the pipe diameter has to be avoided.
- Weld seam as smooth as possible and on the same axis as the slots.
- For best radar propagation behavior holes it is recommended to have holes instead of slots. If slots can not be avoided, they should be as thin and short as possible.
- The hole diameter (deburred) can be 1/7 of the well diameter, but must not exceed 30 mm (1.18 in).
- Length and number of the holes do not affect the measurement.
- The maximum gap allowed between the antenna/horn and the wall of the stilling well is 5 mm (0.2 in).
- At intersections which occur, for example, when using a ball valve or when joining individual tube segments, gaps must be no larger than 1 mm (0.04 in).
- The stilling well must be smooth on the inside. Use extruded or parallel welded steel pipe. An extension of the pipe is possible with welded flanges or pipe sleeves. Flange and pipe have to be properly aligned at the inside.
- Do not weld through the pipe wall. The inside of the stilling well must remain smooth. In case of unintentional welding through the pipe, the weld seam and any unevenness on the inside need to be carefully removed and smoothed. Otherwise, strong interference echoes will be generated and material build-up will be promoted.

Measuring conditions

- The measuring range begins where, the beam hits the tank bottom. Particularly with dish bottoms or conical outlets the level cannot be detected below this point.
- For **overfill protection**, a safety distance **(SD)** should be added to the blocking distance **(BD)**.
- Depending on its consistency, foam can either absorb microwaves or reflect them off its surface. Measurement is possible under certain conditions.
- The smallest possible measuring range **B** (see Fig. below) depends on the antenna version.
- In general, the zero point should be positioned at the end of the stilling well, as the electromagnetic waves do not propagate completely outside the well. It must be taken into account that the accuracy may be reduced in the area C. If this is not acceptable, we recommend positioning the zero point at a distance **C** (see Fig.) above the tank bottom in these applications.
- When using a **planar antenna**, especially for media with low dielectric constants (media group A and B, → 8), the end of the measuring range should not be closer than 1 m to the flange (see **A** in the diagram below).
- The safety distance **(SD)** is set at the factory to 0.5 m (1.6 ft) with alarm output.

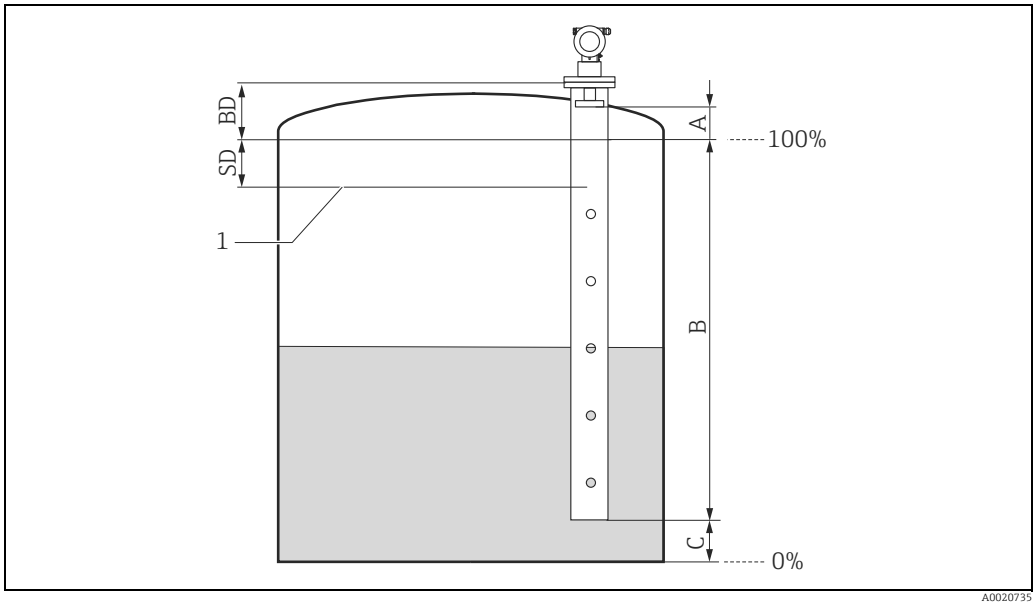

1 Maximum level

Reference: Flange / BD (see Fig.)		Reference: Antenna tip (see Fig.)		
Blocking distance	Safety distance	recommended additional settings		
BD [m (ft)]	SD [m (ft)]	A [mm (in)]	B [m (ft)]	C [mm (in)]
1 (3.3)	0.5 (1.6)	1000 (39.4)	0.5 (1.6)	150 to 300 (5.91 to 11.8)

- Select antenna extension as big as possible. For intermediate sizes (e.g. 180 mm [7.09 in]), use next largest extension and adapt it mechanically. Maximum gap allowed between the antenna/horn and the wall of the stilling well is 5 mm (0.2 in).
- The antenna extensions of the FMR532 is mounted with defined pressure. It is strongly advised not to dismantle the antenna extension.
- Dimensions of a nozzle for manual gauging must be adapt to the dimensions of the horn antenna used, compare with → 35.

Behaviour if measuring range is exceeded

The behavior which results from the measuring range being exceeded can be configured by the user. The default setting is an error current of 22 mA and the output of a digital warning (E681).

Example of stilling well construction

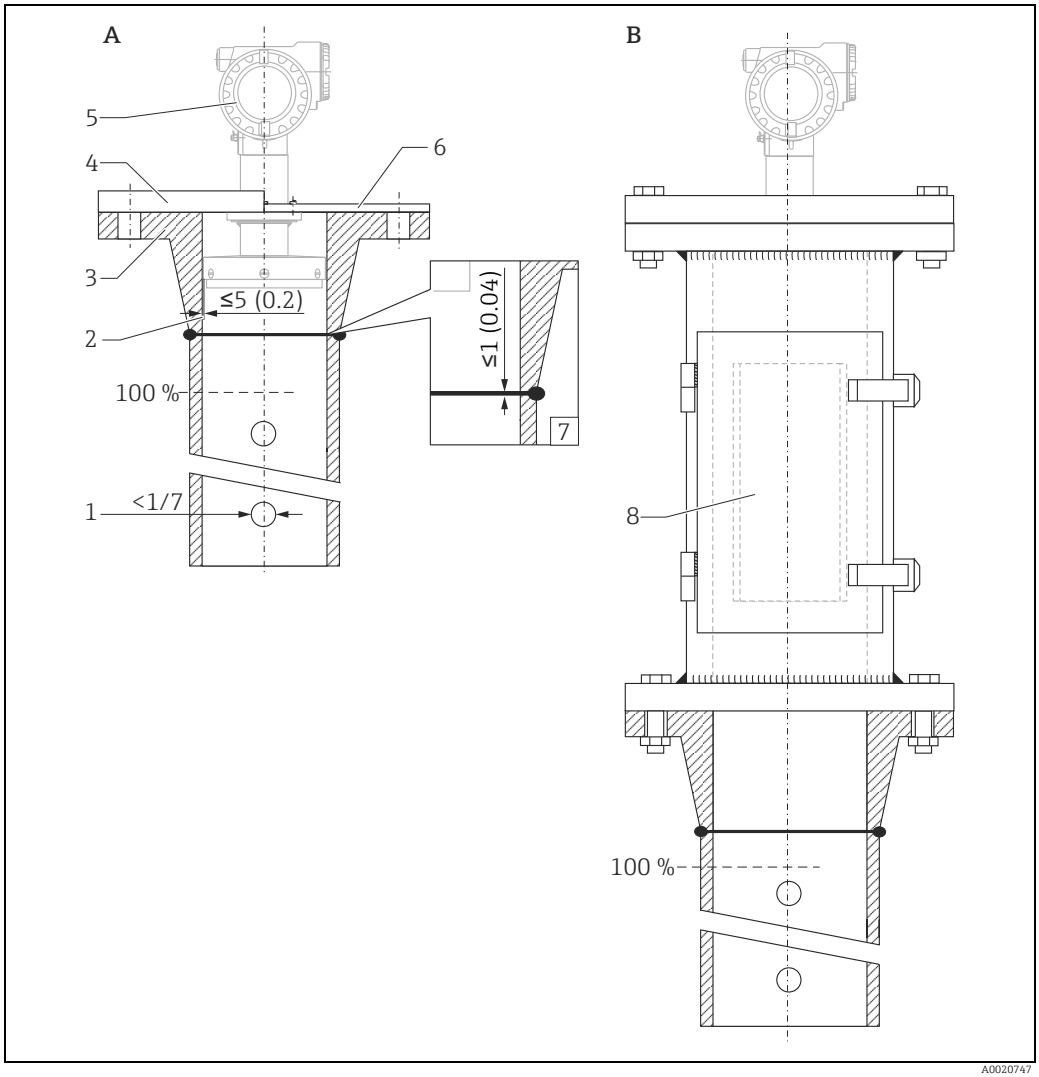

Engineering unit in mm (in)

A Installation in stilling well
B Installation in stilling well with nozzle for manual gauging

1 <1/7 of well diameter
2 Gap <5 mm (0.2 in)
3 Weld neck flange
4 Flange (DIN, ANSI, JIS, JPI)
5 Micropilot S FMR532
6 Endress+Hauser UNI flange
7 Gap <1 mm (0.04 in)
8 Nozzle for manual gauging

Recommended increase in diameter for retrofit of mechanical systems

D1	D2	L
150 (5.91)	200 (7.87)	300 (11.8)
150 (5.91)	250 (9.84)	300 (11.8)
150 (5.91)	300 (11.8)	450 (17.7)
200 (7.87)	250 (9.84)	300 (11.8)
200 (7.87)	300 (11.8)	450 (17.7)
250 (9.84)	300 (11.8)	450 (17.7)

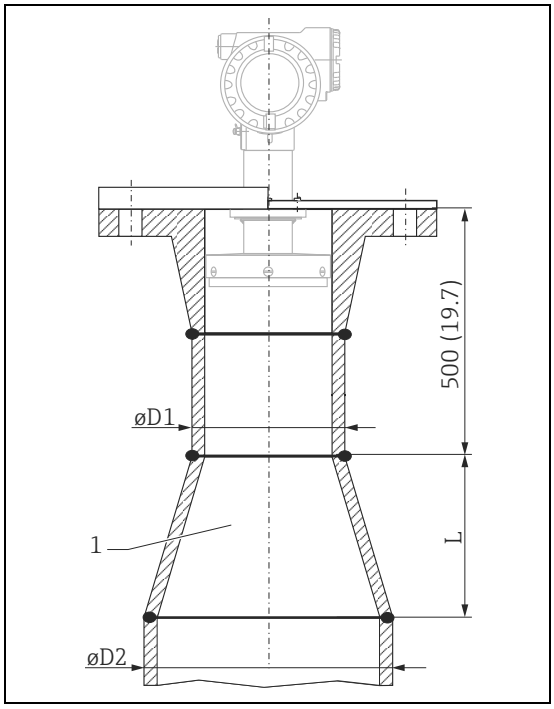

A0020786

Engineering unit in mm (in)

1 Extension

Environment

Ambient temperature range

Ambient temperature for the transmitter:
- Standard: -40 °C to +80 °C (-40 °F to +176 °F)
- For custody transfer measurement: -25 °C to +55 °C (-13 °F to +131 °F)

For T_u < -20 °C (-4 °F) and T_u > +60 °C (+140 °F), the functionality of the LCD is restricted. A weather protection cover should be used for outdoor operation if the device is exposed to direct sunlight.

Storage temperature

-40 °C to +80 °C (-40 °F to +176 °F)

Climate class

DIN EN 60068-2-38 (test Z/AD)

Degree of protection

- Housing: IP65/68, NEMA 4X/6P
- Antenna: IP65/68, NEMA 4X/6P

Vibration resistance

DIN EN 60068-2-64 / IEC 68-2-64: 20 to 2000 Hz, 1 $(m/s^2)^2/Hz$

Cleaning of the antenna

The antenna can get contaminated, depending on the application. The emission and reception of microwaves can thus eventually be hindered. The degree of contamination leading to an error depends on the medium and the reflectivity, mainly determined by the dielectric constant εr. If the medium tends to cause contamination and deposits, cleaning on a regular basis is recommended. Care must be taken during spray-washing or mechanical cleaning to avoid damage to the antenna. The material compatibility has to be considered if cleaning agents are used! The maximum permitted temperature at the flange should not be exceeded

Electromagnetic compatibility (EMC)

- Electromagnetic compatibility in accordance with all relevant requirements of the EN 61326 series and NAMUR recommendation (NE21). For details refer to the Declaration of Conformity. Maximum deviation < 0.5 % of the span.
- A standard installation cable is sufficient if only the analogue signal is used. Use a screened cable when working with a superimposed communications signal (HART).

Approvals for custody transfer applications

All aspects of OIML R85 are fulfilled.

Approvals for custody transfer applications	Version*
NMi + PTB (<1 mm [0.04 in]) type approval (→ 🖹 24)	A
NMi-witnessed initial calibration (<1 mm [0.04 in]) (→ 🖹 24)	F
PTB-witnessed initial calibration (<1 mm [0.04 in]) (→ 🖹 24)	G
not selected; Inventory control (→ 🖹 14)	R

* Order code in Product Configurator (→ 🖹 33)

Process

Process temperature range

-40 °C to +150 °C (-40 °F to 302 °F)

Process pressure limits

0 to 25 bar (0 to 375 psi)

Dielectric constant

εr ≥ 1.4

Mechanical construction

Design, dimensions

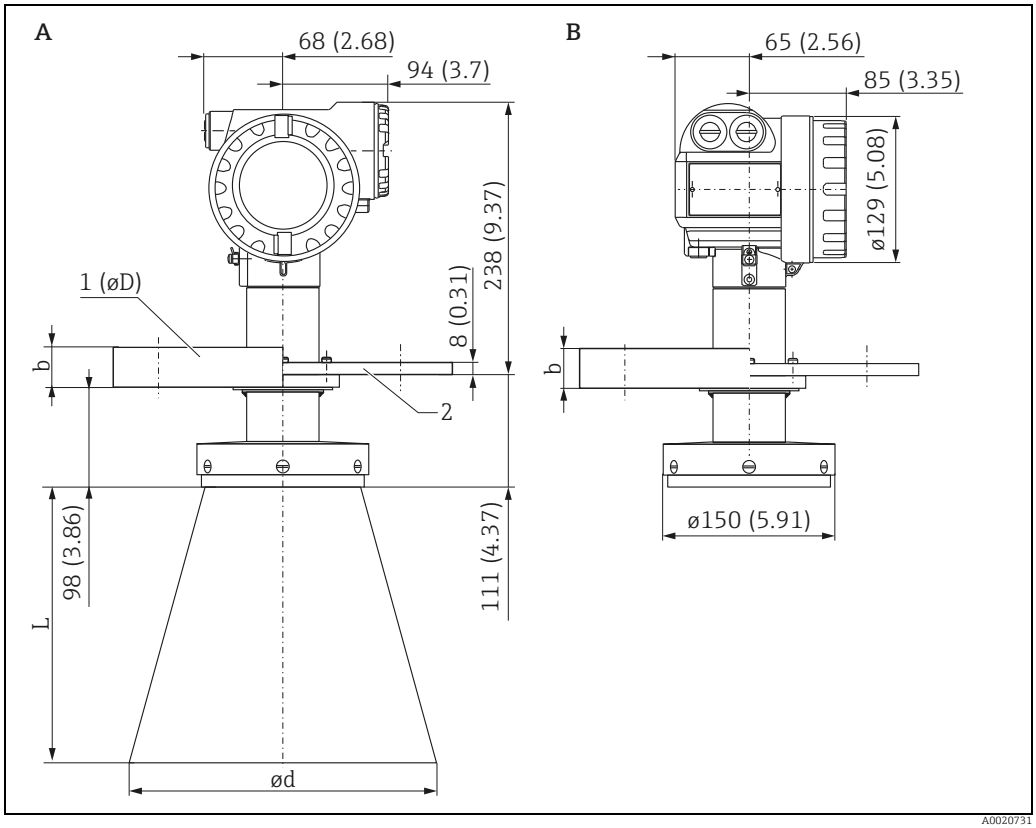

Engineering unit mm (in)

A Version with antenna extension DN200 to 300/8 to 12"
B Version without antenna extension DN200 to 300/8 to 12"
1 DIN, ANSI, JIS, JPI (see table)
2 Endress+Hauser UNI flange (max. 1 bar (15 psi))

The inactive length of 60 mm (2.36 in) prevents condensation from influencing antenna performance. Special versions with longer construction are available.

Flange / Process connection	b (mm [in])	øD (mm [in])	Version*
ANSI B16.5			
6" 150 lbs	25.4 (1.0)	279.4 (11.0)	AVJ
6" 300 lbs	36.6 (1.44)	317.5 (12.5)	AWJ
8" 150 lbs	28.4 (1.12)	342.9 (13.5)	A3J
8" 300 lbs	41.1 (1.62)	381.0 (15.0)	AXJ
10" 150 lbs	30.2 (1.19)	406.4 (16.0)	A5J
12" 150 lbs	31.8 (1.25)	482.6 (19.0)	A7J
JIS B2220			
10K 150A	22 (0.87)	280 (11.02)	KVJ
20K 150A	28 (1.10)	305 (12.0)	KWJ
10K 200A	22 (0.86)	330 (12.99)	KDJ
20K 200A	30 (1.18)	350 (13.78)	KXJ
10K 250A	24 (0.95)	400 (15.75)	K5J

Flange / Process connection	b (mm [in])	øD (mm [in])	Version*
JPI 7S -15			
6" 150A 150 lbs	25,9 (1,2)	280 (11.02)	LJJ
8" 200A 150 lbs	29,0 (1,14)	345 (13.58)	LKJ
10" 250A 150 lbs	30,6 (1,2)	405 (15.95)	LLJ
EN1092-1 (suitable for DIN2527 C)			
DN150 PN16	22 (0.86)	285 (11.2)	CWJ
DN150 PN25	28 (1.10)	300 (11.8)	C1J
DN200 PN16	24 (0.95)	340 (13.39)	CXJ
DN200 PN25	30 (1.18)	360 (14.17)	CZJ
DN250 PN16	26 (1.02)	405 (15.95)	C6J
DN300 PN16	28 (1.1)	460 (18.1)	C8J

Antenna	L (mm [in])	ød (mm [in])	Version*
8" 200 mm	244 (9,61)	192 (7,56)	2
10" 250 mm	397 (15,6)	242 (9,53)	3
12" 300 mm	424 (16,7)	292 (11,5)	4

* Order code in Product Configurator (→ 33)

Detailed information on Endress+Hauser UNI flange (→ 25).

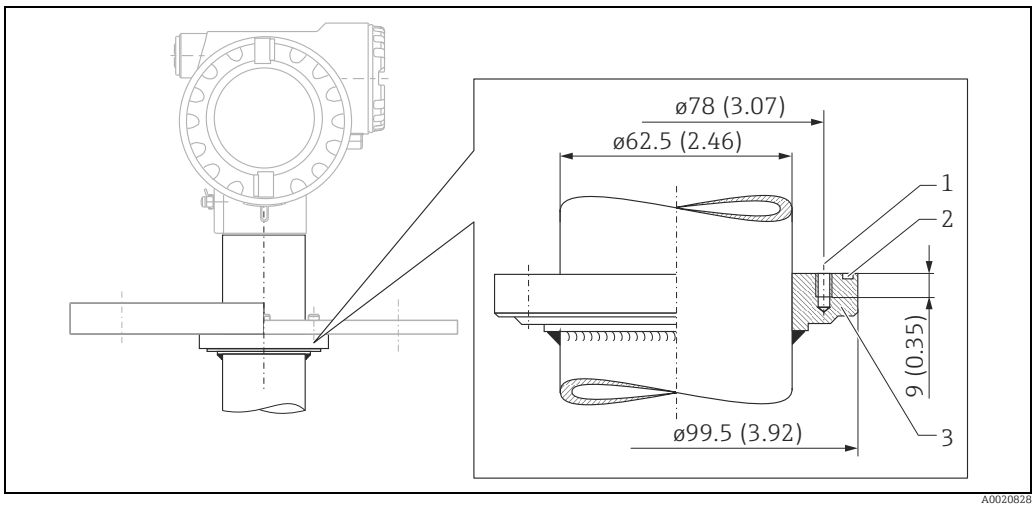

Flange hub for mounting flanges supplied by customer. Engineering unit mm (in)

1 Mounting: 4 screws M6 / 90°, e.g. DIN 912
2 O-ring 82.3 x 3.53 mm (3.24 to 0.14 in) is supplied (same material as sensor seal)
3 Flange hub, see Endress+Hauser UNI flange.

Weight 6.5 kg (14.33 lbs) + flange weight [1)]

1) Flange weights according to form sheet

Materials

Materials in contact with process

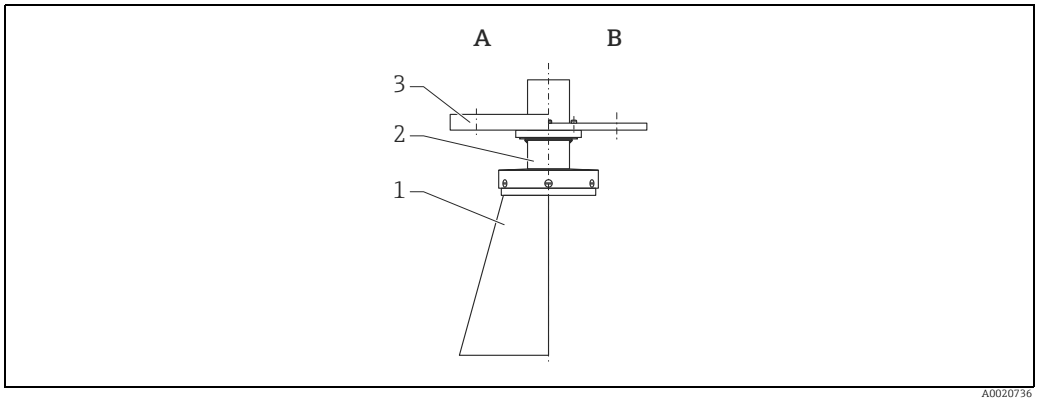

A DN200 to DN300 with antenna extension
B DN150 without antenna extension

Pos.	Part	Material
1	Horn antenna	316L (1.4404)
2	Housing pipe	316L (1.4435)
	Housing and retaining ring	316L (1.4404)
	Screw	A2
	Planar antenna	PTFE
	Sealing ring	Viton
3	Flange	316L (1.4404/1.4435)
	Adapter	316L (1.4404)
	Sealing	Viton
	Screws, Spring washer	A2

Materials not in contact with process

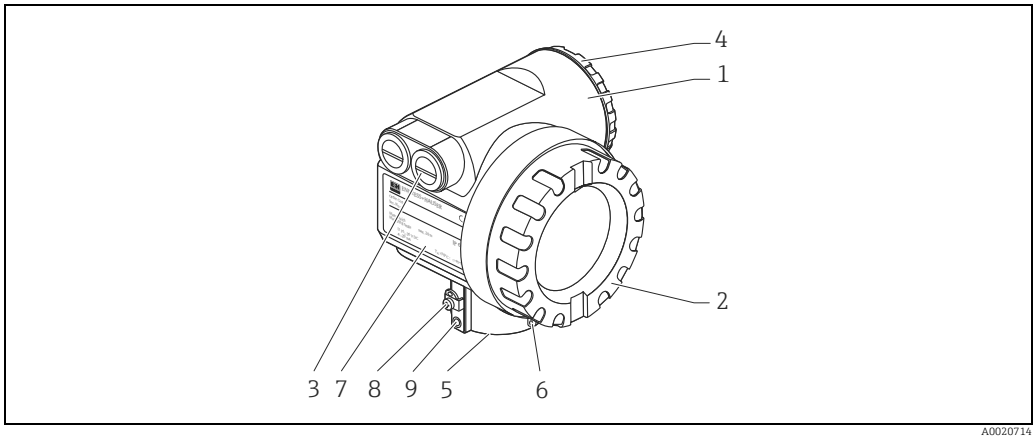

A0020714

Housing T12, aluminum

Pos.	Part	Material	
1	T12 housing	AlSi10Mg (aluminum, powder-coated)	
2	Cover (Display)	AlSi10Mg	
	Seal	Fa. SHS: EPDM 70pW FKN	
	Window	ESG-K-Glass (Toughened safety glass)	
	Sealing of the glass	Silicone sealing compound Gomastit 402	
3	Seal	Fa. SHS: EPDM 70pW FKN	Trelleborg: EPDM E7502
	Cable gland	Polyamid (PA), CuZn nickel-plated	
	Plug	PBT-GF30	1.0718 galvanized
		PE	3.1655
	Adapter	316L (1.4435)	AlMgSiPb (anodized)
4	Cover (Connection compartment)	AlSi10Mg	
	Sealing	Fa. SHS: EPDM 70pW FKN	Trelleborg: EPDM E7502/ E7515
	Clamp	Screws: A4; Clamp: Ms nickel-plated; Spring washer: A4	
5	Sealing ring	Fa. SHS: EPDM 70pW FKN	Trelleborg: EPDM E7502/ E7515
6	Tag	304 (1.4301)	
	Rope	VA	
	Crimp sleeve	Aluminium	
7	Nameplate	316L (1.4404)	
	Groove pin	A4 (1.4571)	
8	Ground terminal	Screws: A2; Spring washer: A4; Clamp: 304 (1.4301) Holder: 1.4310	
9	Screw	A2-70	

Endress+Hauser supplies DIN/EN flanges made of stainless steel according to AISI 316L (DIN/ EN material number 1.4404 or 1.4435). With regard to their temperature stability properties, the materials 1.4404 and 1.4435 are grouped under 13E0 in EN 1092-1 Tab. 18. The chemical composition of the two materials can be identical.

Type plate for custody transfer applications

In addition to the standard type plate, the device features a type plate for custody transfer applications with the following statements:
- manufacturer
- device type
- label for custody transfer approval
  PTB: "Z" with approval number and issuing agency, the 4-digit approval number is shown in the upper part of the "Z", the lower part shows year and month of type approval.
  NMi: field for 5-digit approval number
- year of manufacturing
- space for imprinted tank identification number
- statement of measuring range suitable for custody transfer approval including unit
- statement of ambient temperature range suitable for calibration to regulatory standards.

The following statements are also required for calibration to regulatory standards. They are listed on the standard type plate and are not repeated here:
- date of manufacturing
- tester

The type plate for calibration to regulatory standards can be sealed. It is mounted with screws, therefore also available as a spare part. The "stamping" of the electronic compartment is achieved using the custody locking switch (see Fig. → 30), with the result that no additional stamping location is required.

The fields are only filled if in feature "70 - Weight + measure approval" the variant "F" or "G" is selected.

NMi type plate (example)

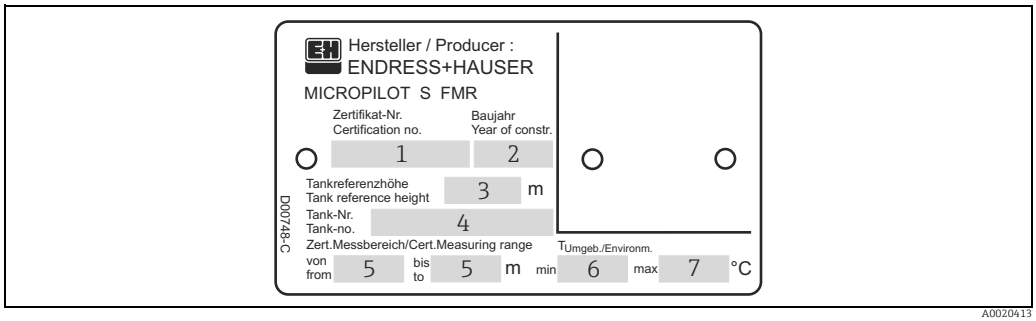

1 Certificate number
2 Year of manufacture
3 Tank reference height
4 Tank number
5 Certified measuring range from ... to ....
6 Min. ambient temperature
7 Max. ambient temperature

PTB type plate (example)

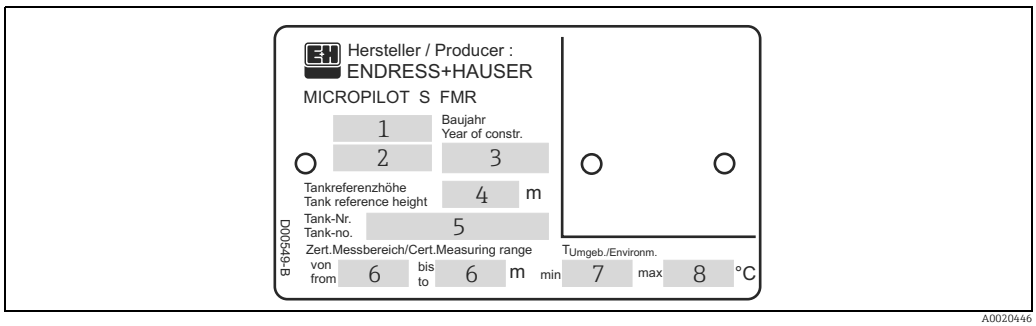

1 Approval number
2 Year and month of type approval
3 Year of manufacture
4 Tank reference height
5 Tank number
6 Certified measuring range from ... to ....
7 Min. ambient temperature
8 Max. ambient temperature

Endress+Hauser UNI flange

Installation hints

Endress+Hauser UNI flanges are designed for non-pressurized operation. Typical pressure fluctuations of breather valves can be tolerated. The number of bolts has sometimes been reduced. The bolt-holes have been enlarged to allow for the dimensions to be adapted. Therefore, the flange must be properly aligned with the counterflange before the bolts are tightened.

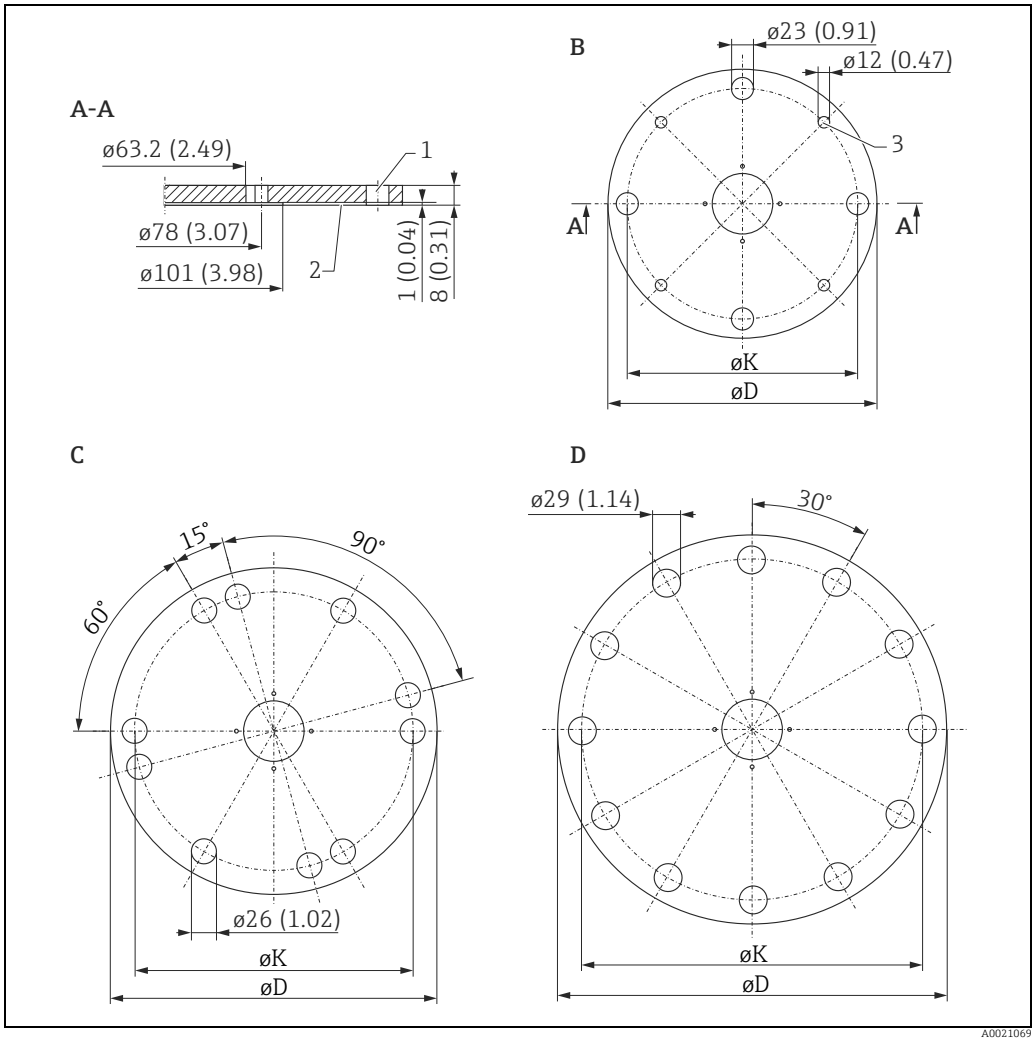

Engineering unit mm (in)

1 4 x ø7 mm (0.28 in) moved 90°
2 Sealing surface
3 For small screws

UNI flange	Compatible with	øD (mm [in])	øK (mm [in])	Type plate no.	Material	Version*
B	▪ DN150 PN16 ▪ ANSI 6" 150lbs ▪ JIS 10K 150	280 (11.0)	240 (9.45)	942455-3001	1.4301	XVU
C	▪ DN200 PN16 ▪ ANSI 8" 150lbs ▪ JIS 10K 200	340 (13.4)	294.5 (11.6)	942455-3002		X3U
D	▪ DN250 PN16 ▪ ANSI 10" 150lbs ▪ JIS 10K 250	405 (15.9)	358 (14.1)	942455-3003		X5U

* Order code in Product Configurator (→ 33); for flange hub version XXJ (→ 21)

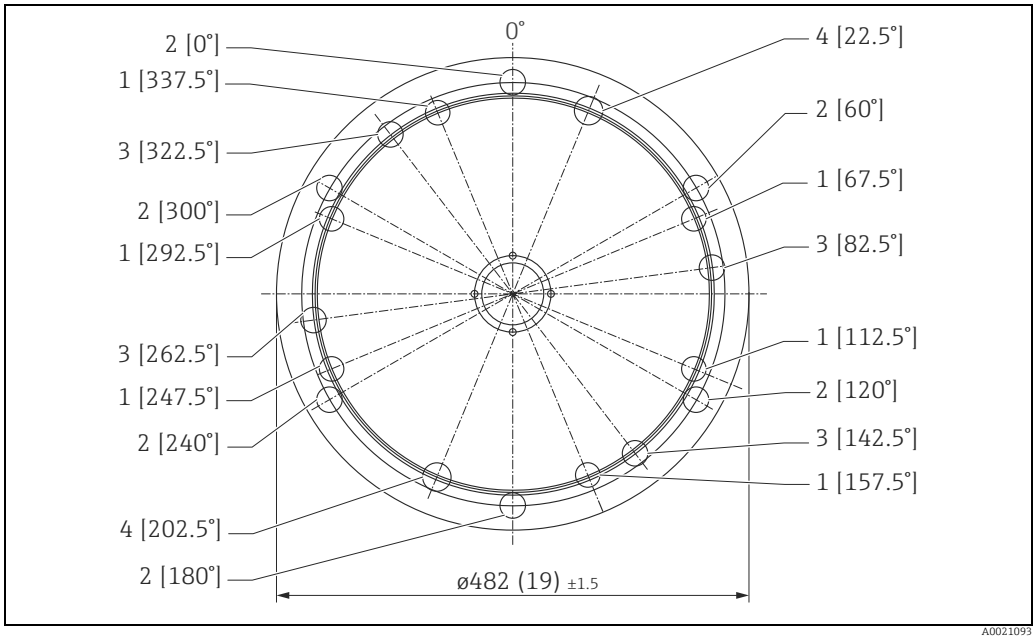

Endress+Hauser UNI flange. Engineering unit mm (in).

Position	Hole circle øK [mm (in)]	Compatible with	Type plate no.	Material	Version*
1: for JIS 2: for ANSI 3: for DIN 4: for DIN+JIS	ø25 (0.98): 400 (15.7) ø26 (1.02): 431.8 (17) ø26* (1.02): 410 (16.1) ø29 (1.14): 404.5 (15.9)	▪ DN300 PN16 ▪ ANSI 12" 150lbs ▪ JIS 10K 300	942455-3004	1.4301	X7U

* Order code in Product Configurator (→ 33)

Operability

Operation concept

The display of the process value and the configuration of the Micropilot is done locally by means of a large 4-line alphanumeric display with plain text information. The guided menu system with integrated help texts ensures a quick and safe commissioning. Display and operation are possible in any one of seven languages (English, German, French, Italian, Dutch, Spanish or Japanese). During the first start-up, the device explicitly asks for the desired unit / language. To access the display the cover of the electronic compartment may be removed even in hazardous area (Ex ia, IS). Remote commissioning, including documentation of the measuring point and in-depth analysis functions, is supported via FieldCare, the FDT-based Plant Asset Management Tool by Endress+Hauser.

Access to the electronics can be prevented by means of a custody locking switch that locks the device settings.
The custody locking switch can be sealed for custody transfer applications.

Local operation

Operation with VU331

Using the LC-Display, configuration is possible directly at the device via the operating keys . All device functions can be set through a menu system. The menu consists of function groups and functions. Within a function, application parameters can be read or adjusted. The user is guided through a complete configuration procedure.

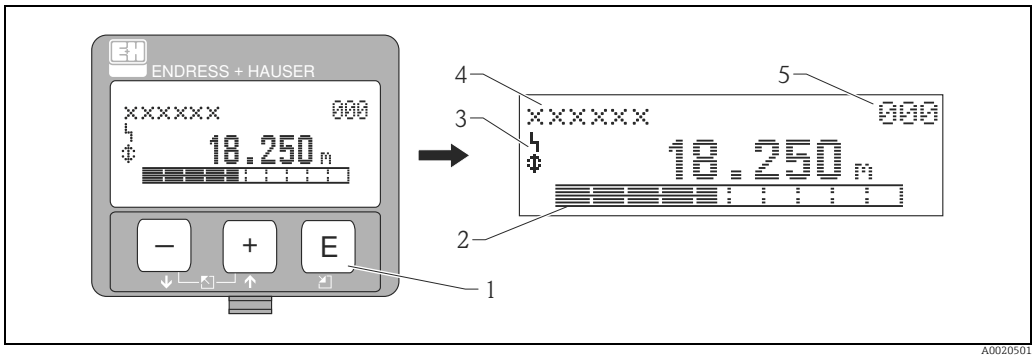

A0020501

1 Operating keys
2 Bar graph
3 Symbols
4 Function name
5 Parameter identification number

Remote operation

The Micropilot S can be remotely operated via HART. On-site adjustments are also possible.

Operation with FieldCare

FieldCare is an Endress+Hauser asset management tool based on FDT technology. With FieldCare, you can configure all Endress+Hauser devices as well as devices from other manufacturers that support the FDT standard. Hardware and software requirements you can find on the internet: www.de.endress.com → Search: FieldCare → FieldCare → Technical data.

FieldCare supports the following functions:
- Configuration of transmitters in online operation
- Signal analysis via envelope curve
- Tank linearization
- Loading and saving device data (upload/download)
- Documentation of measuring point

Connection options:
- HART via Commubox FXA195 and the USB port on a computer
- Commubox FXA291 with ToF Adapter FXA291 (USB) via service interface

Menu-guided commissioning

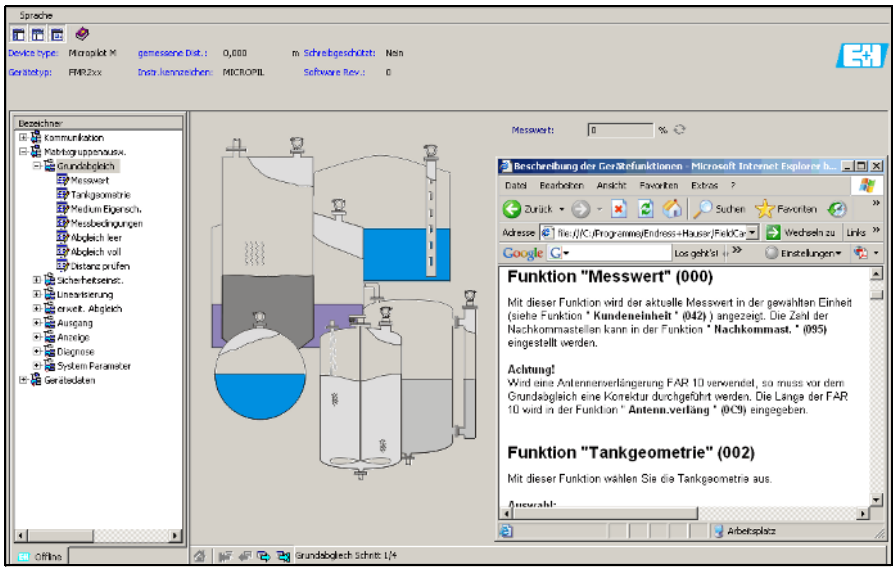

A0021211-EN

Signal analysis via envelope curve

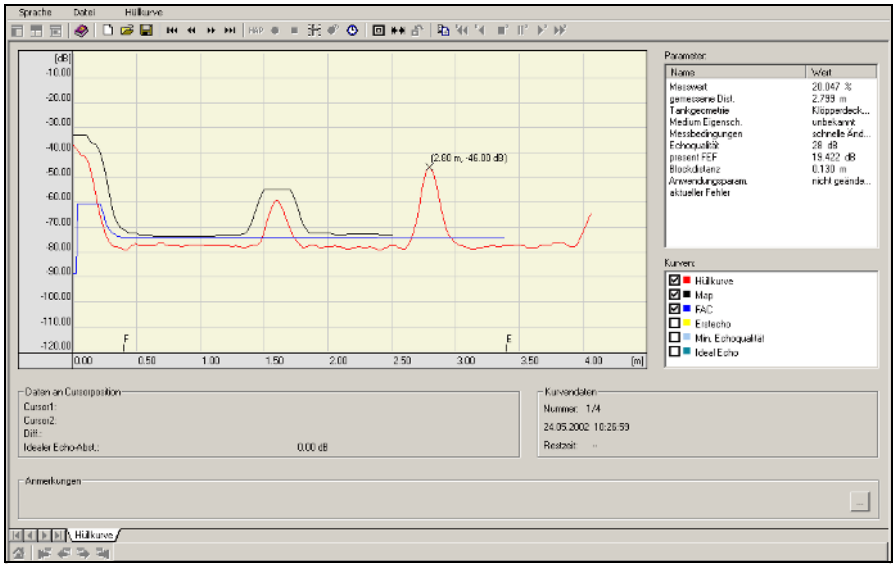

A0021212-EN

Tank linearization

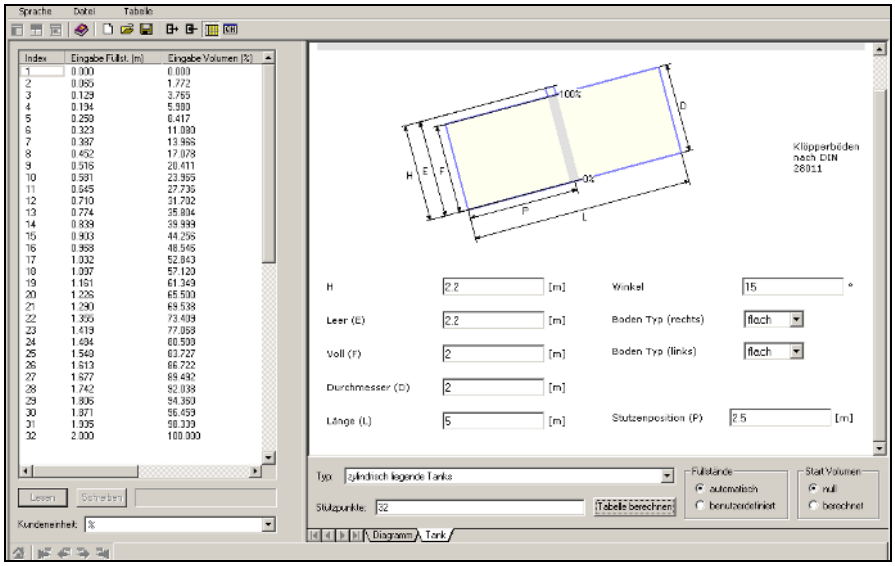

A0021213-EN

Operation with Field Communicator 475

With the Field Communicator 475, all device functions can be configured via a menu operation.

Further information on the handheld terminal can be found in the relevant Operating Instructions included in the transport bag of the Field Communicator 475.

Display elements

Liquid crystal display (LCD):

Four lines with 20 characters each. Display contrast adjustable through key combination.

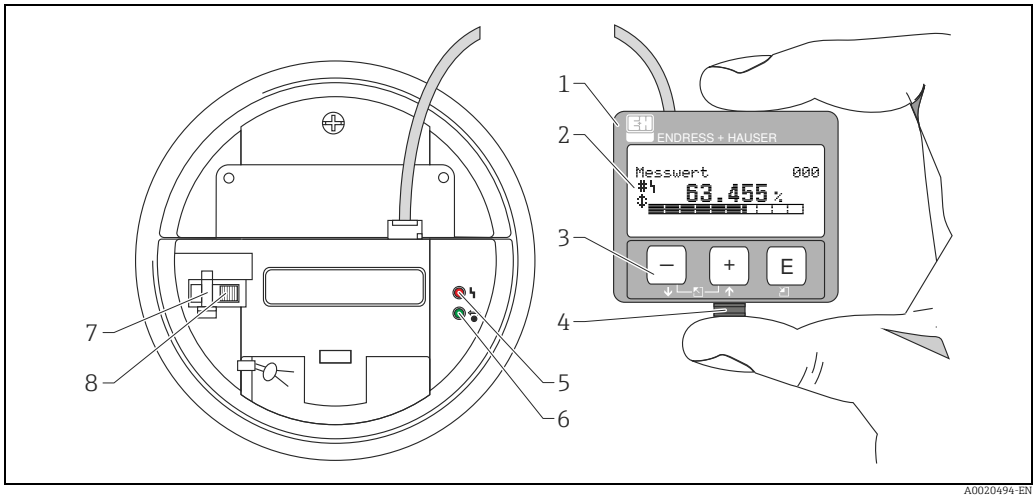

1 *Liquid crystal display*
2 *Symbols*
3 *Operating keys*
4 *Snap fit*
5 *Red LED*
6 *Green LED*
7 *Custody locking switch*
8 *Sealing pin*

To access the display, it is possible to open the cover of the electronics compartment even in an explosion hazardous area. The LCD can be removed for easy operation by simply pressing the snap fit (see graphic above). It is connected to the device by means of a 500 mm (19.7 in) long cable.

Display symbols

The following table describes the symbols that appear on the liquid crystal display:

Symbols	Meaning
	ALARM_SYMBOL This alarm symbol appears when the device is in an alarm state. If the symbol flashes, this indicates a warning.
	LOCK_SYMBOL This lock symbol appears when the device is locked, i.e. if no input is possible.
	COM_SYMBOL This communication symbol appears when a data transmission via e.g. HART is in progress.
	Calibration to regulatory standards disturbed If the device is not locked or suitability for custody transfer measurement cannot be guaranteed, this will be indicated on the display by this symbol.

Light emitting diods (LEDs):

There is a green and a red LED beside the LCD.

LED	Meaning
red LED continuously on	Alarm
red LED flashes	Warning
red LED off	No alarm
green LED continuously on	Operation
Green LED flashes	Communication with external device

Operating elements

The operating elements are located inside the housing and are accessible for operation by opening the lid of the housing.

Function of the keys

Key(s)	Meaning
[+] or [↑]	▪ Navigate upwards in the selection list. ▪ Edit numeric value within a function.
[−] or [↓]	▪ Navigate downwards in the selection list. ▪ Edit numeric value within a function.
[Esc] [−] [+] or [←]	Navigate to the left within a function group.
[E]	▪ Navigate to the right within a function group. ▪ Confirm entries.
[+] and [E] or [−] and [E]	Contrast settings of the LCD.
[+] and [−] and [E]	Hardware lock / unlock After a hardware lock, an operation of the device via display or communication is not possible! The hardware can only be unlocked via the display. An unlock parameter must be entered to do so.

Certificates and approvals

CE approval

The measuring system meets the legal requirements of the EC-guidelines. Endress+Hauser confirms the device passing the required tests by attaching the CE-mark.

C-Tick symbol

The measuring system meets the EMC requirements of the "Australian Communications and Media Authority (ACMA)".

Ex approval

- ATEX
- CSA
- FM
- NEPSI
- TIIS

When operating in hazardous areas, additional safety instructions must be observed.
These can be found in the separate document entitled "Safety Instructions" (XA), which is included in the scope of delivery. The applicable XA is indicated on the nameplate.

Details on the certificates available and the relevant XAs can be found in the "Documentation" section under "Safety instructions" → 37.

Overfill prevention

WHG, see ZE00243F/00/DE.

RF approvals

R&TTE 1999/5/EG, FCC CRF 47, part 15

CRN approvals

Versions with a CRN approval (Canadian Registration Number) are listed in the corresponding registration documents. CRN-approved devices are assigned the registration number 0F10904.5CADD2.

Custody type approval

All aspects of OIML R85 are fulfilled.

External standards and guidelines

EN 60529
Protection class of housing (IP-code)

EN 61010
Safety regulations for electrical devices for measurement, control, regulation, and laboratory use

EN 61326
Emissions (equipment class B), compatibility (appendix A – industrial area)

NAMUR
Standards committee for measurement and control in the chemical industry

To conception and development for Micropilot S have been followed the external standards and guidelines:

API (American Petroleum Institute)
Particularly "Manual of Petroleum Measurement Stadards"

OIML R85 (Organisation Internationale de Métrologie Légale)

Ordering information

Ordering information

Detailed ordering information is available as follows:
- In the Product Configurator on the Endress+Hauser website: www.endress.com ?Select country ? Instruments ?Select device ?Product page function: Configure this product
- From your Endress+Hauser sales center: www.endress.com/worldwide

Product Configurator - the tool for individual product configuration
- Configuration data updated on a daily basis
- Depending on the device: Direct input of data specific to measuring point, such as measuring range or operating language
- Automatic verification of exclusion criteria
- Automatic generation of order code with breakdown in PDF or Excel output format
- Possibility to order directly from the Endress+Hauser online shop

Scope of delivery

The scope of delivery comprises:
- Device, mounted
- Optional accessories
- 2 lead seals
- CD-ROM with Endress+Hauser operating software
- Brief Operating Instructions KA01057F/00/EN for fast commissioning (included with device)
- Brief Operating Instructions KA00161F/00/A2 (basic calibration/trouble-shooting), stored in device
- Approval documentation, if not included in the Operating Instructions
- CD-ROM with additional technical documentation, e.g.
  - Operating Instructions
  - Description of Instrument Functions

Accessories

A variety of accessories is available for the Micropilot S. They can be ordered separately from Endress+Hauser.

Device-specific accessories

Weather protection cover

A weather protection cover made of stainless steel is available for outdoor installation (order code: 543199-0001). The shipment includes the protective cover and tension clamp.

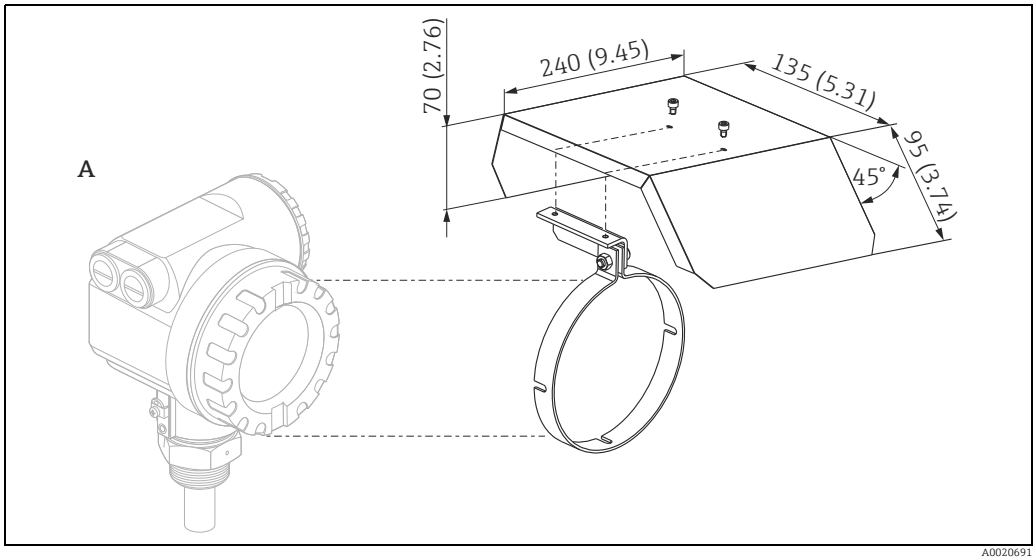

Engineering unit mm (in)

A Housing T12

Nozzle for manual gauging

Installation hints

For control and cleaning purposes for sample taking as well as for hand dipping (tape), a nozzle for manual gauging is recommended. The sensor head of FMR532 (planar antenna!) can be easily checked in the area of the opening.
Manual gauging with gauge rod or tape is possible without removal of the transmitter. The lower edge of the opening is the reference for the gauging. The construction is only suitable for non-pressurized operation and should be used for the planar antenna version FMR532 only.

The nozzle for manual gauging is not part of the standard offering from Endress+Hauser. For more information, please contact your Endress+Hauser sales center.

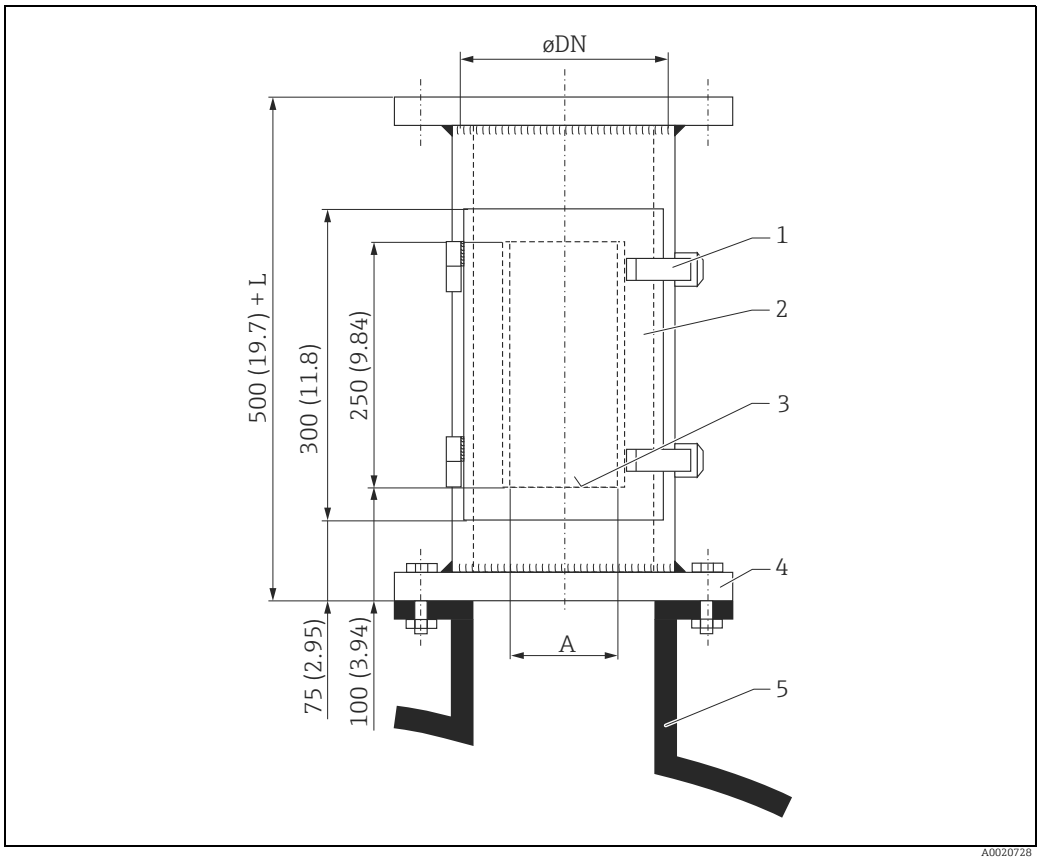

Engineering unit mm (in)

1 Quick fastening mechanism
2 Door with seal, opening
3 Reference position
4 Flange size as per tank
5 Tank nozzle; stilling well

Flange	DN150	DN200	DN250/300	Flange	ANSI 6"	ANSI 8"	ANSI 10"
PN [bar][1)]	16	16	16	PN [lbs]1)	150	150	150
A [mm]	110	140	170	A [mm]	110	140	170
L [mm}	–	300	450	L [mm}	–	300	450

1) Only dimensions adapted to standard. Designed for non-pressurized operation only; therefore thickness of flange can be reduced (e.g. 8 mm (0.31 in) thick).

Communication-specific accessories

Commubox FXA195 HART

For intrinsically safe communication with FieldCare via the USB interface.
For details refer to TI00404F/00/EN.

Commubox FXA291

The Commubox FXA291 connects Endress+Hauser field devices with CDI interface (= Endress+Hauser Common Data Interface) to the USB interface of a personal computer or a notebook.
For details refer to TI00405C/07/EN.

For the device you need the "ToF Adapter FXA291" as an additional accessory.

ToF Adapter FXA291

The ToF Adapter FXA291 connects the Commubox FXA291 via the USB interface of a personal computer or a notebook to the device. For details refer to KA00271F/00/A2.

Field Xpert

Compact, flexible and robust industrial handheld terminal for remote configuration and measured value retrieval via HART current output and via FOUNDATION Fieldbus.
For details, see Operating Instructions BA00060S.

Service-specific accessories

FieldCare

FDT-based Plant Asset Management Tool from Endress+Hauser. It can configure all smart field units in your system and helps you manage them. By using the status information, it is also a simple but effective way of checking their status and condition. For details, see Operating Instructions BA00027S and BA00059S.

Supplementary Documentation

Standard documentation

The following document types are available:

- On the CD supplied with the device
- In the Download Area of the Endress+Hauser website→ www.de.endress.com → Download

Documentation	
Operating Instructions	BA00208F/00/EN
Description of Instrument functions	BA00217F/00/EN
Brief Operating Instructions (for fast commissioning)	KA01057/00/EN2
Brief Operating Instructions (in the device)	KA00161F/00/A2

Supplementary device-dependent documentation

Device	Documentation	
Tank Side Monitor NRF590	Technical Information	TI00402F/00/EN
	Operating Instructions	BA00256F/00/EN
	Description of Instrument Functions	BA00257F/00/EN

Safety Instructions

Depending on the approval, Safety Instructions (XA) are supplied with the device. These instructions are an integral part of the Operating Instructions.

Certificate/type of protection	Documentation	Version*
ATEX II 1/2 G Ex ia IIC T6	XA00081F	1
ATEX II 1/2 G Ex ia IIC T6 + WHG	XA00081F + WHG: ZE00243F/00/EN	6
ATEX II 3G Ex nA IIC T6	XA00231F	G
FM IS Cl.I Div.1 Gr.A-D	XA00555F	S
CSA IS Cl.I Div.1 Gr.A-D	XA00540F	U
NEPSI Ex ia IIC T6 to T1	XA00579F	I
TIIS Ex ia IIC T3	–	K
TIIS Ex ia IIC T6	–	L

* Order code in Product Configurator (→ 33)

The nameplate indicates which Safety Instructions (XA) apply to the device.



www.addresses.endress.com

Endress+Hauser

People for Process Automation