TI01622C/07/EN/03.25-00
71696585
2025-01-31

Technical Information
TOC Analyzer CA78

Determination of trace levels of total organic carbon (TOC)



Powerful compact device

Application

The analyzer is designed to determine the total organic carbon in ultrapure water applications that meet the following conditions:

- Conductivity < 10 µS/cm
- pH range: neutral

Your benefits

- Fast commissioning due to short run-in period
- Compact design for flexible installation
- Low limit of detection and short response time
- Monitoring of up to 3 channels
- Minimum training required thanks to intuitive user interface

Endress+Hauser
People for Process Automation

Table of contents

Function and system design 3
Measuring principle 3

Equipment architecture 3
Block diagram 3

Reliability 4
Maintainability 4

Input 4
Measured variables 4
Measuring range 4
Input signal 4

Output 4
Output signal 4
Load 4
Transmission behavior 4

Current outputs, active 4
Span 4

Power supply 4
Supply voltage 4
Power consumption 4
Power supply cable 4

Performance characteristics 4
Measured variable 4
Measuring range 5
Maximum measurement error 5
Limit of detection (LOD) 5
Response time t_{90} 5
Number of measuring channels 5
Sample requirement 5
UV reactor 5
Calibration interval 5
Maintenance intervals 5
Maintenance effort 5

Installation 5
Mounting location 5
Installation instructions 5

Environment 6
Ambient temperature range 6
Storage temperature 6
Relative humidity 6
Degree of protection 6
Electromagnetic compatibility 7
Electrical safety 7
Pollution level 7

Process 7
Sample temperature 7
Process pressure 7
Sample outlet 7
Sample quality 7
Maximum conductivity of sample 7
pH value of the sample 7
Sample supply 7

Mechanical construction 8
Dimensions 8
Weight 8
Materials 8
Hose specification 8

Operability 8
Operation concept 8
Display 8
Operating language 8

Certificates and approvals 8

Ordering information 9
Product page 9
Product Configurator 9
Scope of delivery 9

Accessories 9

Function and system design

Measuring principle

Determination of total organic carbon (TOC) in energy generation and the semi-conductor industry

In ultrapure water systems, any biological activity must be reliably prevented. This also applies for hard-to-access areas of ultrapure water preparation and storage. In online analytics, TOC is the established sum parameter for this measurement task. Water that is virtually TOC-free does not offer microorganisms an environment for growth. In addition, any microorganisms introduced from the outside are detected immediately due to the carbon they contain. Extremely low TOC values therefore offer double protection against the biological contamination of ultrapure water facilities. TOC measurement has therefore become the established method at numerous measuring points in the ultrapure water system. Accompanying processes, such as the operation of heat and cation exchangers, are also regularly monitored by online TOC analysis.

TOC determination based on UV digestion and the measurement of differential conductivity

The TOC analyzer uses the fast and reliable digestion of organic substances by short-wave UV radiation. The organic substances are oxidized to CO_2 during the time the medium is in contact with the UV light. Via the carbonic acid balance, the dissolved CO_2 causes the conductivity to increase due to the formation of hydrogen carbonate. A pair of electrodes located upstream and downstream from the UV radiation measures the increase in conductivity and converts it to TOC. Due to the very low limit of detection, the method applied in the analyzer has become the established standard worldwide in ultrapure water monitoring.

Equipment architecture

Block diagram

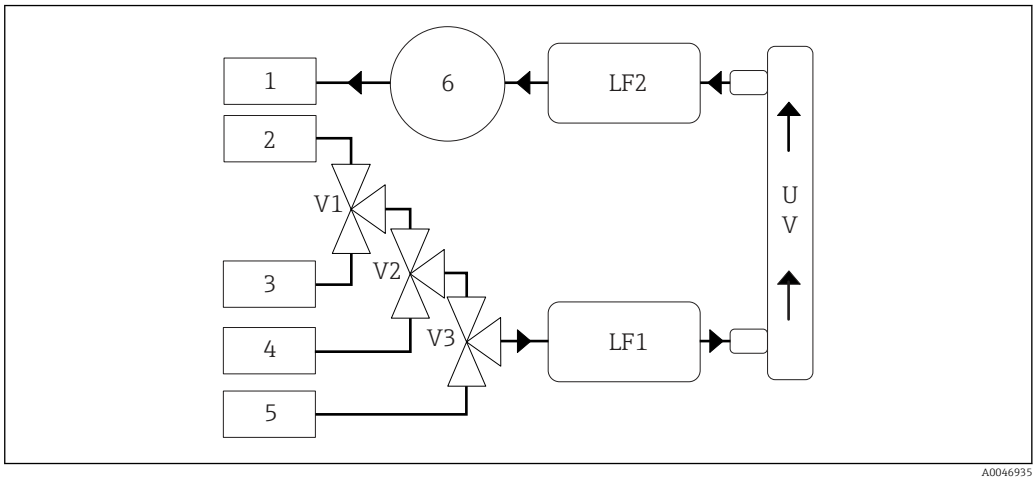

1 Process diagram

1 Waste
2 Sample
3 Input 1
4 Input 2
5 Input 3
6 Pump
V1 - Valve 1, valve 2 (order option) and valve 3 (order option)
V3
LF1 - Conductivity and temperature sensors
LF2
UV UV lamp (12 VDC)

Reliability

Maintainability	The device has defined maintenance intervals for all wear parts. When the maintenance schedule is followed, the device therefore offers an extremely high degree of reliability and enables high measuring point availability.

Input

Measured variables	TOC
Measuring range	0.5 to 1 000 µg/l (ppb)
Input signal	Controller input 24 V (order option) The controller input starts a measurement. The function is only available for 1-channel devices.

Output

Output signal	**Measuring channel 1** 0/4 to 20 mA, galvanically isolated **Measuring channel 2 (optional)** 0/4 to 20 mA, galvanically isolated
Load	500 Ω max.
Transmission behavior	Configurable, in the measuring range 4 to 20 mA Standby: 3.8 mA

Current outputs, active

Span	0 to 20 mA; according to Namur NE43

Power supply

Supply voltage	100/240 V AC, 47 - 63 Hz
Power consumption	Max. 60 W
Power supply cable	2 m, Type E+F mains plug pre-installed

Performance characteristics

Measured variable	TOC (total organic carbon)

Measuring range	TOC (total organic carbon)
Maximum measurement error	+/- 0.5 µg/l (ppb) or 1 %, the larger value applies in each case
Limit of detection (LOD)	0.1 µg/l (ppb)
Response time t_{90}	50 s
Number of measuring channels	1 to 3, depending on the order version
Sample requirement	~ 14 ml/min.
UV reactor	UV reactor with continuous function monitoring
Calibration interval	The device is calibrated on delivery. It is recommended to perform a new calibration after replacing components in contact with the process, such as the pump hose or UV reactor.
Maintenance intervals	▪ Replacement of calibration solution - before every calibration ▪ Replacement of pump hose - every 6 months ▪ Replacement of UV reactor - every 6 months ▪ Replacement of UV reactor ballast - every 24 - 36 months ▪ Replacement of pump head - every 36 - 48 months
Maintenance effort	1 hour per month

Installation

Mounting location	Bench-top or wall mounting
Installation instructions	Place the analyzer on an even, vibration-free surface. The four blind rivet nuts (M6) on the back of the housing can be used to mount the analyzer on the wall.

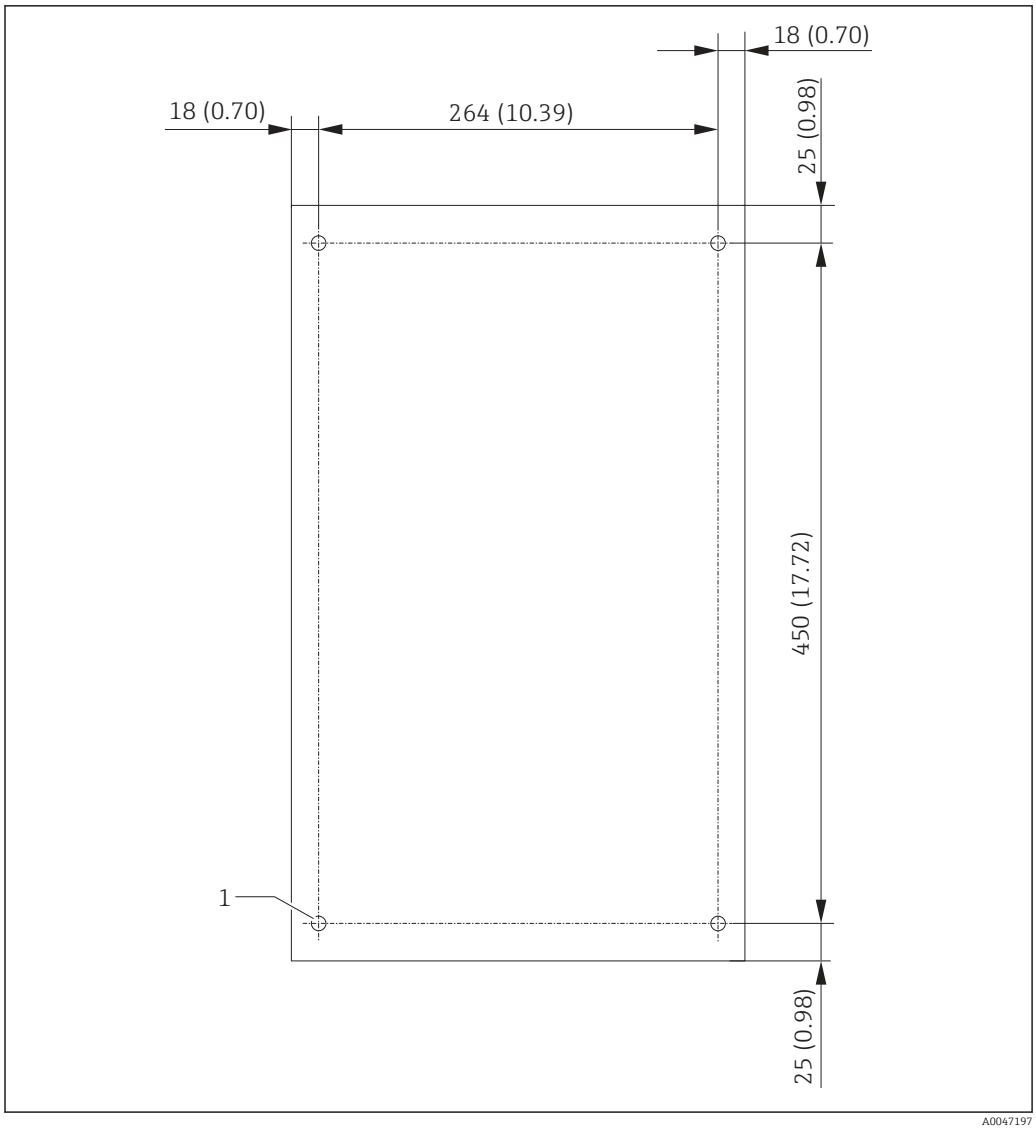

2 Rear of the housing

1 Blind rivet nut

The mounting location must be free from vibrations and the wall must have sufficient load-bearing strength.

Environment

Ambient temperature range	10 to 45 °C (50 to 113 °F)
Storage temperature	2 to 55 °C (35 to 131 °F)
Relative humidity	10 to 90 %, non-condensating
Degree of protection	IP54

Electromagnetic compatibility [1)]	Interference emission and interference immunity as per EN 61326-1:2013, Class A for Industry
Electrical safety	According to EN/IEC 61010-1:2010, Class 1 equipment Low voltage: overvoltage category II For installations up to 3 000 m (9 800 ft) above MSL
Pollution level	2

Process

Sample temperature	< 50 °C (122 °F)
Process pressure	Max. 0.5 bar (7.25 psi); recommended 0.25 bar (3.62 psi)
Sample outlet	Depressurized
Sample quality	Particle-free
Maximum conductivity of sample	Max. 2 µS/cm Order option: max. 10 µS/cm
pH value of the sample	Neutral Various preconditioning systems are available for conditioning basic samples. Contact your sales office specifying all relevant process conditions.
Sample supply	▪ 1 port for sample: 1 port for calibration ▪ Order option 1: 3 ports for sample, 1 port for calibration

1) Sufficient mains quality is required to operate the product as designated.

Mechanical construction

Dimensions

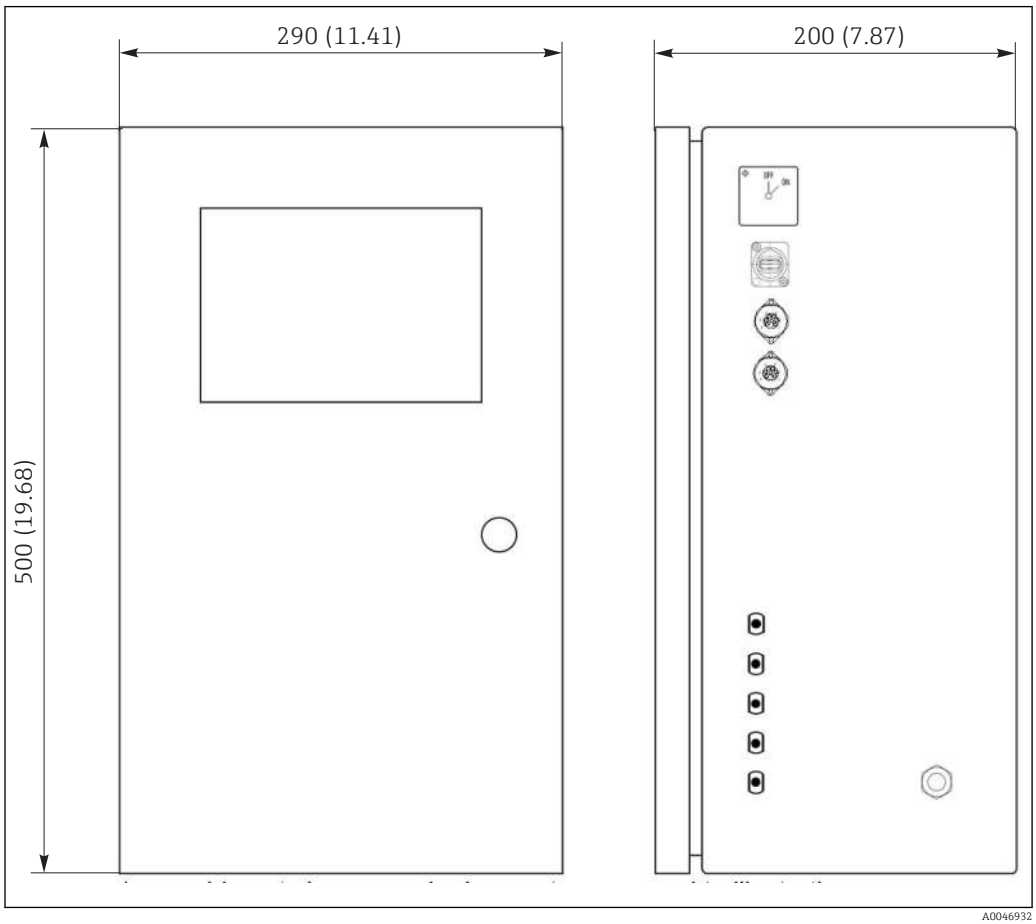

3 Dimensions in mm (in)

Weight	Approx. 14 kg (30.86 lb)
Materials	Stainless steel housing
Hose specification	Sample hose 1/8 inch, 3.2 mm OD included in connection kit

Operability

Operation concept	Intuitive operating concept due to the schematic visualization of the measuring point.
Display	8" touch screen monitor
Operating language	English (US)

Certificates and approvals

Current certificates and approvals for the product are available at www.endress.com on the relevant product page:

1. Select the product using the filters and search field.
2. Open the product page.

3. Select **Downloads**.

Ordering information

Product page

www.endress.com/ca78

Product Configurator

1. **Configure**: Click this button on the product page.
2. Select **Extended selection**.
   ↳ The Configurator opens in a separate window.
3. Configure the device according to your requirements by selecting the desired option for each feature.
   ↳ In this way, you receive a valid and complete order code for the device.
4. **Accept**: Add the configured product to the shopping cart.

For many products, you also have the option of downloading CAD or 2D drawings of the selected product version.

5. **CAD**: Open this tab.
   ↳ The drawing window is displayed. You have a choice between different views. You can download these in selectable formats.

Scope of delivery

The scope of delivery comprises:
- 1 analyzer with the configuration ordered
- 1 installation kit
- 1 certificate of calibration
- 1 x Operating Instructions

Accessories

The following are the most important accessories available at the time this documentation was issued.

Listed accessories are technically compatible with the product in the instructions.

1. Application-specific restrictions of the product combination are possible.
   Ensure conformity of the measuring point to the application. This is the responsibility of the operator of the measuring point.
2. Pay attention to the information in the instructions for all products, particularly the technical data.
3. For accessories not listed here, please contact your Service or Sales Center.

CA78/79 pressure reducer kit

Supply pressure: max. 10 bar (145 psi), adjustable output pressure

Order No. 71543593

CA78/79 heat exchanger kit

Temperature: can be used up to a maximum temperature of 90 °C (194 °F)

Order No. 71543592



www.addresses.endress.com

Endress+Hauser

People for Process Automation