TI01168C/07/EN/06.26-00
71786295
2026-03-27

Technical Information
Cleanfit CPA875

Retractable process assembly for sterile and hygienic applications for in-line measurements with standard 12 mm sensors



Application

The modular retractable assembly has been consistently developed with safety in mind:
- Safety in operation
- Safety during cleaning for hygienic processes
- Protection against contamination in sterile processes

The assembly is therefore perfectly suitable for use in the following industries:
- Food and beverages
- Biotechnology
- Life sciences
- Special chemicals

Benefits

- Maximum availability with minimum maintenance
- Safe measurement and accurate measured values
- Higher product quality thanks to reliable measurement results
- Modular design ensures investment is secure
- Versions available with EHEDG certification
- Versions available with FDA 21 CFR declaration and USP biological reactivity tests
- Versions with 3-A certificate available

Endress+Hauser
People for Process Automation

Function and system design

Operating principle

With the Cleanfit CPA875 retractable assembly, you can carry out pH, ORP, oxygen and other measurements reliably using suitable sensors. You can remove, clean, sterilize or calibrate/adjust the sensors without interrupting the process.

The assembly can be installed in both vessels and pipes.

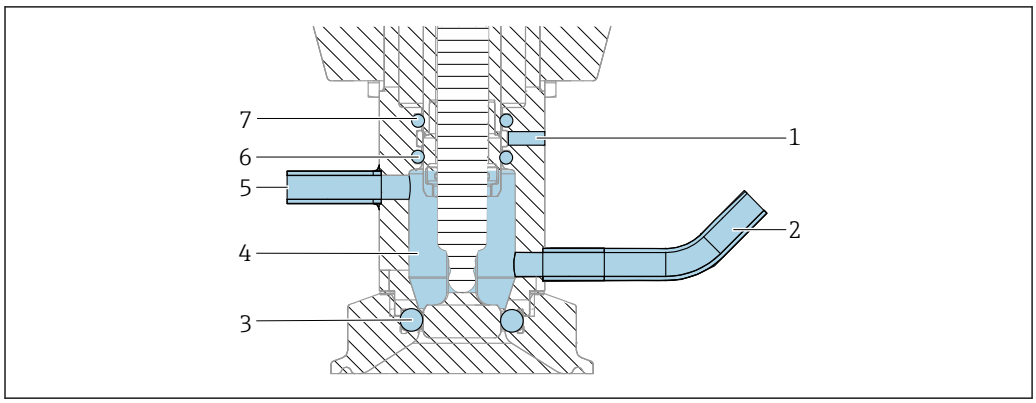

A0046119

1 Sealing system, assembly in service position

1 *Leakage hole*
2 *Rinse chamber, inlet*
3 *Process seal, seal for DN25 with 1 x O-ring*
4 *Rinse chamber*
5 *Rinse chamber, outlet*
6 *Seal, rinse chamber (1 x O-ring)*
7 *Seal drive (1 x O-ring)*

Measuring system

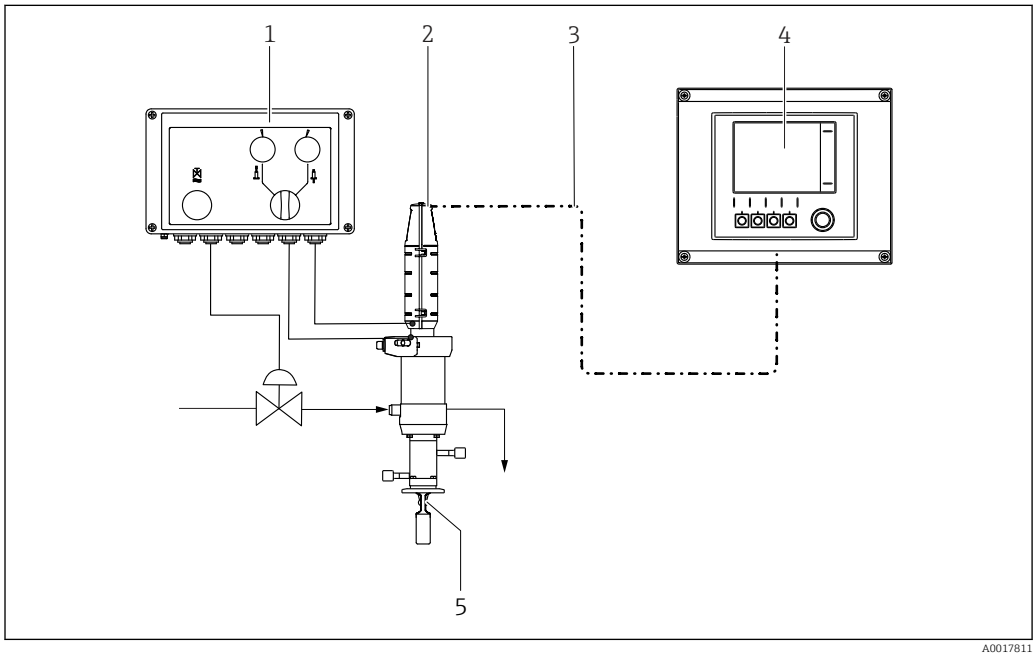

A0017811

2 Measuring system (example)

1 *Air-Trol CYC10 control unit*
2 *Cleanfit CPA875 assembly*
3 *Measuring cable*
4 *Liquiline CM44x transmitter*
5 *Sensor*

Process seal

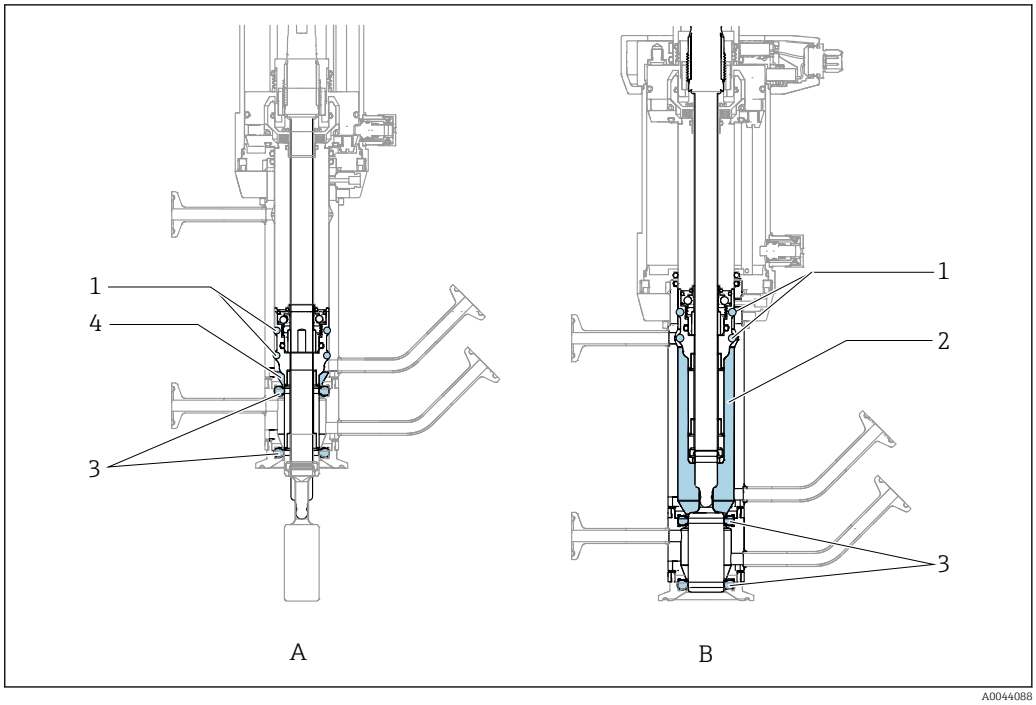

3 Moving sealing rings, only refers to the double chamber

A Measuring position
B Service position
1 "Moving" seals in the double chamber
2 Chamber volume in service position
3 Molded seal
4 Chamber volume in measuring position

Elements

The assembly is available with a manual or pneumatic drive.

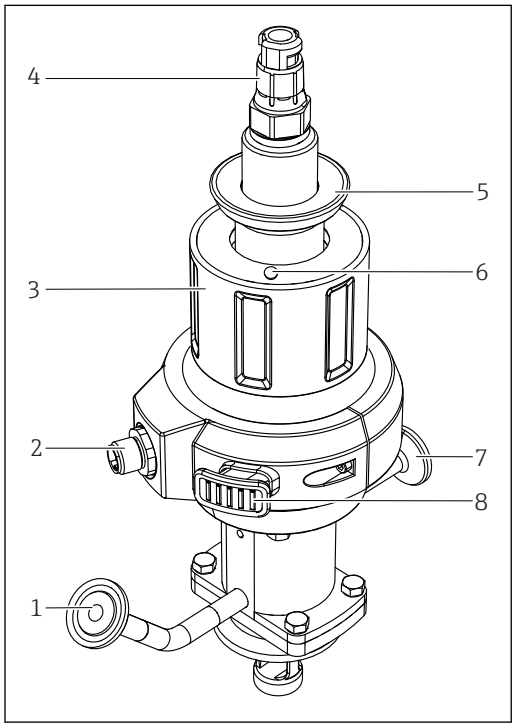

4 *Assembly with manual drive (without protection cap)*

1 *Rinse connection*
2 *Connection for limit position switch*
3 *Manual drive*
4 *Sensor head*
5 *Fastening ring for protective cap*
6 *Unlocking button (service position)*
7 *Rinse connection*
8 *Unlocking button (measuring position)*

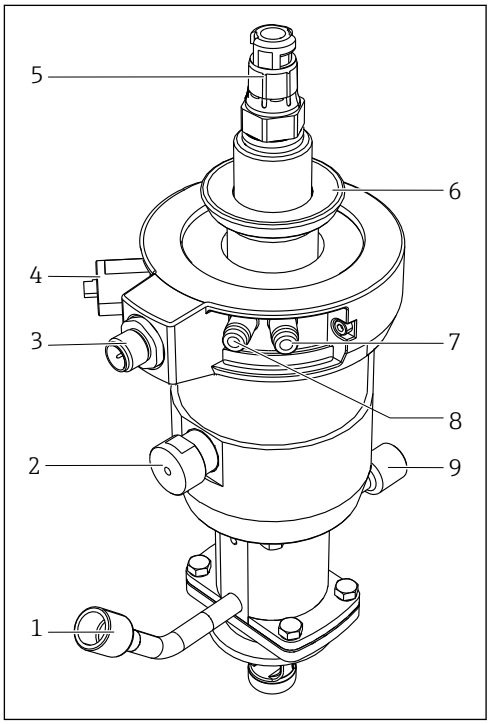

5 *Assembly with pneumatic drive (without protective cap)*

1 *Rinse connection*
2 *Automatic limit position lock, process*
3 *Connection for limit position switch*
4 *Automatic limit position lock, service*
5 *Sensor head*
6 *Fastening ring for protective cap*
7 *Pneumatic connection (move to measuring position)*
8 *Pneumatic connection (move to service position)*
9 *Rinse connection*

Design

The retractable assembly has a modular design and can therefore be flexibly adapted to a wide array of applications.

A choice of two chamber systems is available for the assembly:
- Single-chamber system with a service chamber or
- double-chamber system with an "inner" service chamber and a "front" service chamber

It is possible to choose between the following strokes for the electrode guide:
- 36 mm (1.42 in) for flow housing, for example, and
- 78 mm (3.07 in) for installation in vessels, for example

Dependability

Safety function

Locking mechanism without sensor
If a sensor is not installed, the assembly can be moved from the service position to the measuring position.

Manual or pneumatic drive
The sensor can be driven both manually and pneumatically. The manual drive can be used for process pressures up to 8 bar (116 psi). The pneumatic drive can be used for process pressures up to 16 bar (232 psi).

Limit position locking if compressed air fails
If the compressed air fails in pneumatic assemblies, the assembly remains in the position previously selected.

Limit position locking with manual drive
For position locking, the manual version has an unlocking button in both the measuring position and the service position.

Impossible to remove sensor in the measuring position
The protection cap for covering the sensor has the following functions:
- Mechanical sensor safety
- Prevents sensor removal in the assembly measuring position

The bottom part of the protection cap is partly inserted into the drive and cannot be opened as a result.

Limit position detection
The limit positions can be indicated by an inductive sensor. In the case of assemblies with a pneumatic drive, the service and measuring position of the sensor are detected inductively and reported to connected systems (only for the measuring position in the case of the manual drive assembly).

Cleaning

Medium drains completely out of "inner" service chamber and the "front" service chamber"
If the assembly is mounted in an angle of up to 15° to the horizontal, the cleaning medium can drain off completely, without leaving any residue.

Special process seal without openings
Special, patented aseptic seals are used to avoid any openings that cannot be cleaned. These meet the same hygienic requirements as pipe connections used in corresponding applications (not for NA process connection).

Installation

Sensor selection

Short version	Gel electrodes, ISFET	225 mm (8.86 in)
	KCl electrode	225 mm (8.86 in)
Long version	Gel electrodes, ISFET	225 mm (8.86 in)
	Gel electrodes, ISFET	360 mm (14.17 in)
	KCl electrode	360 mm (14.17 in)

Limit position switches

Switching element function:	NAMUR NC contact (inductive)
Switching distance:	1.5 mm (0.06 ")
Nominal voltage:	8 V
Switching frequency:	0 to 5000 Hz
Housing material:	Stainless steel
Output interface terminals	NAMUR
Limit position switches (inductive conductivity sensors)	Pepperl+Fuchs NJ1,5-6,5-15-N-Y180094

Environment

Ambient temperature range
−10 to 70 °C (14 to 158 °F)

Storage temperature
−10 to 70 °C (14 to 158 °F)

Degree of protection
IP66

Vibration resistance and shock resistance
Sinusoidal similar to DIN EN IEC 60068-2-6
- 2-8.4 Hz, 7.5 mm peak
- 8.4-2000 Hz, 5 g peak

Broadband noise similar to DIN EN IEC 60068-2-64
- 10-200 Hz, 0.01 g^2/Hz
- 8200-2000 Hz, 0.003 g^2/Hz
- Total: 2.70 g rms

Shocks (half-sine) similar to DIN EN IEC 60068-2-2
30 g, 6 ms

Process

Process temperature range

−10 to 140 °C (14 to 284 °F)

Process pressure range

Pneumatic drive	16 bar (232 psi) to 140 °C (284 °F)
Manual drive	8 bar (116 psi) to 140 °C (284 °F)

The service life of the seals is reduced if process temperatures are constantly high or if SIP is used. The other process conditions may also reduce the service life of the seals.

Pressure-temperature ratings

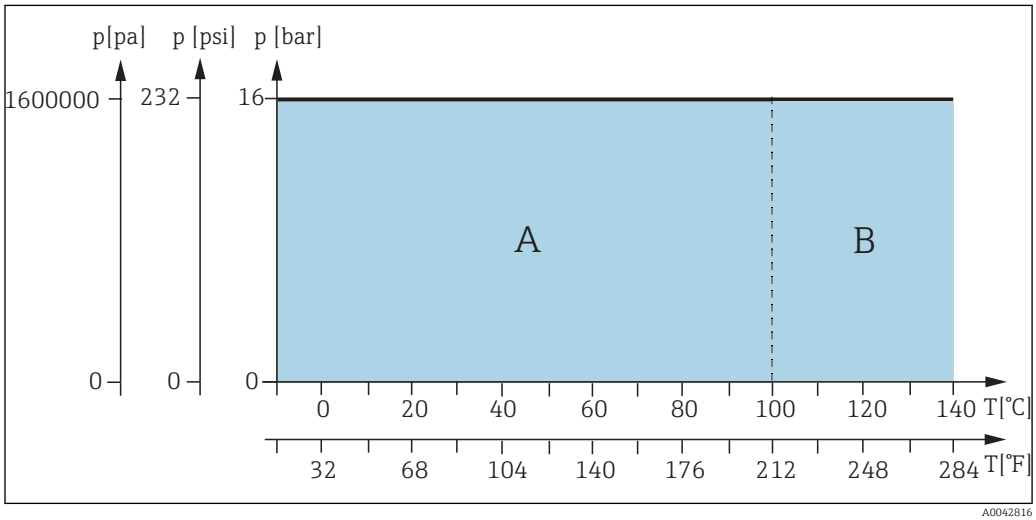

6 Pressure-temperature ratings for pneumatic drive

A Dynamic range
B Static range

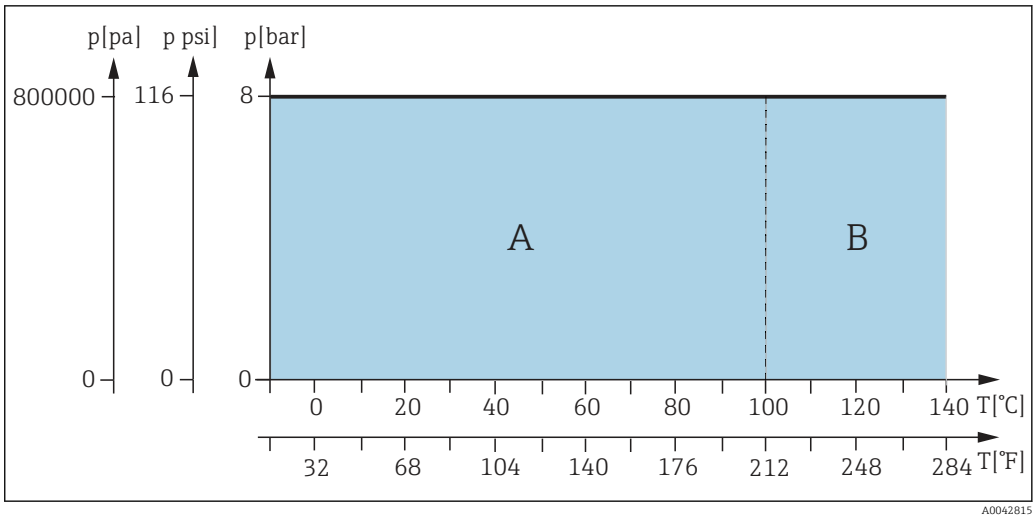

7 *Pressure-temperature ratings for manual drive*

A Dynamic range
B Static range

Mechanical construction

Design, dimensions

Short version

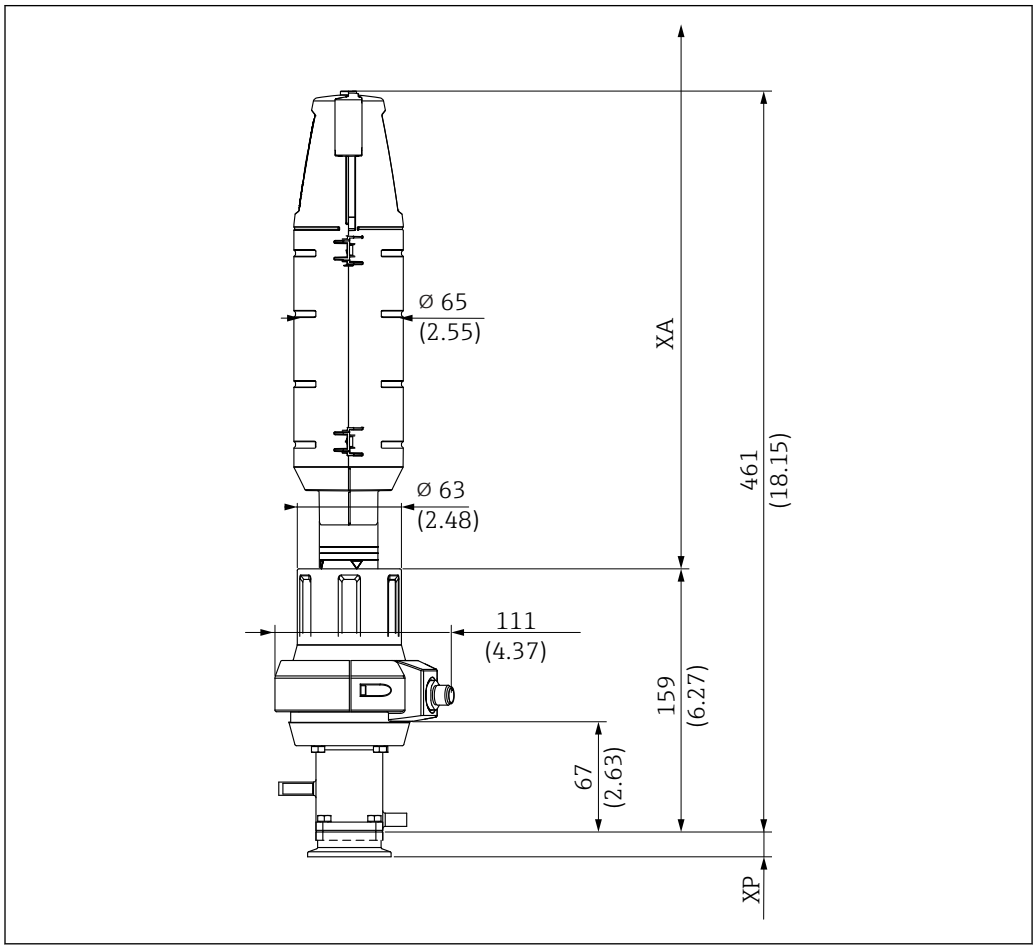

8 Dimensions for short version (36 mm stroke) with manual drive in service position in mm (in)

XP Height of particular process connection (see table below)
XA Necessary mounting distance for sensor replacement = 425 mm (16.73")

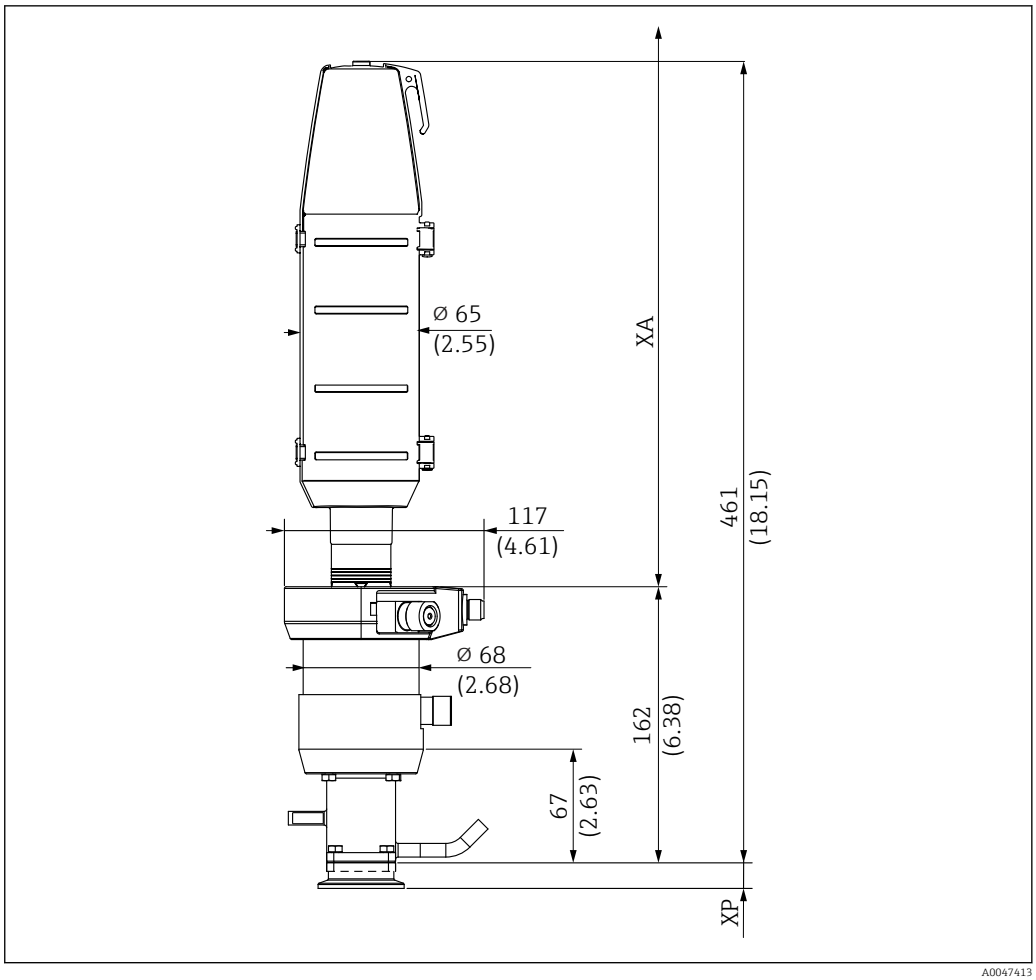

9 Dimensions for short version (36 mm stroke)with pneumatic drive in service position in mm (in)

XP Height of particular process connection (see table below)
XA Necessary mounting distance for sensor replacement = 425 mm (16.73")

Long version

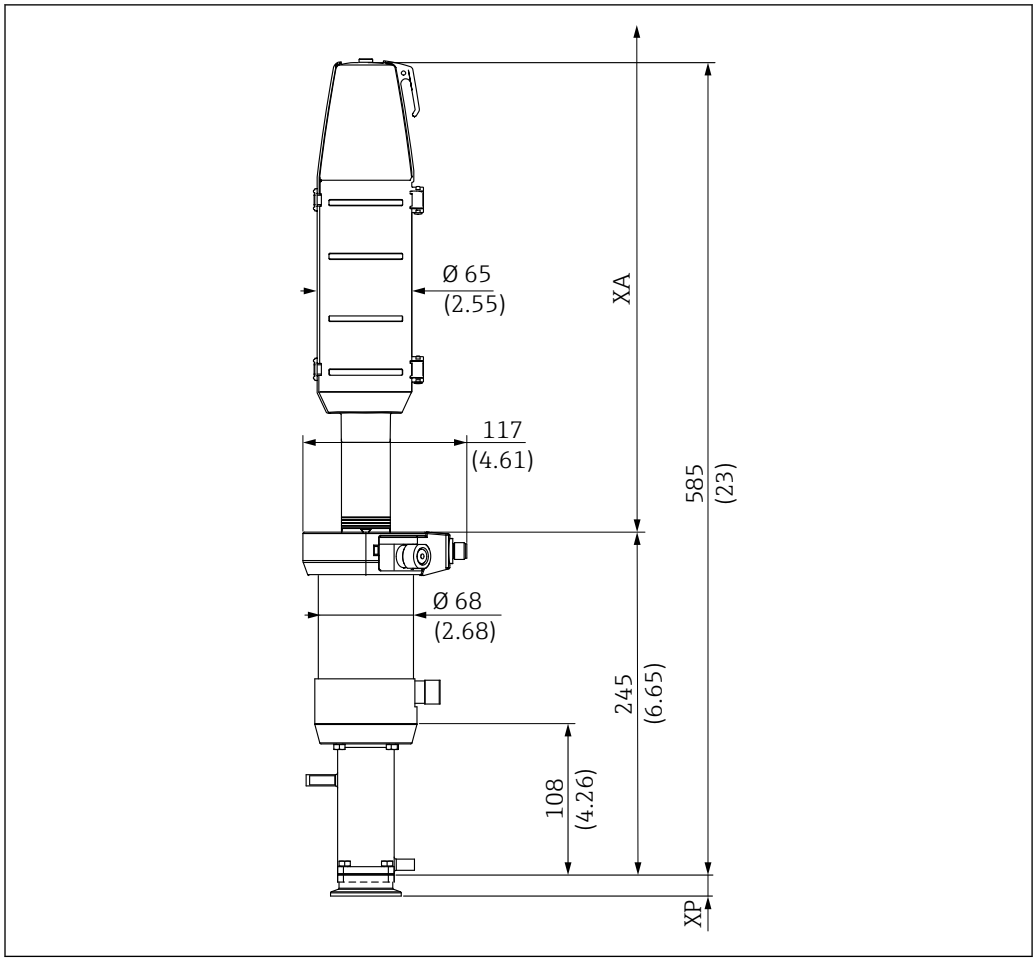

10 Dimensions for long version (78 mm (3.1 in) stroke) with pneumatic drive in service position in mm (in)

XP Height of particular process connection (see table below)
XA Necessary mounting distance for sensor replacement

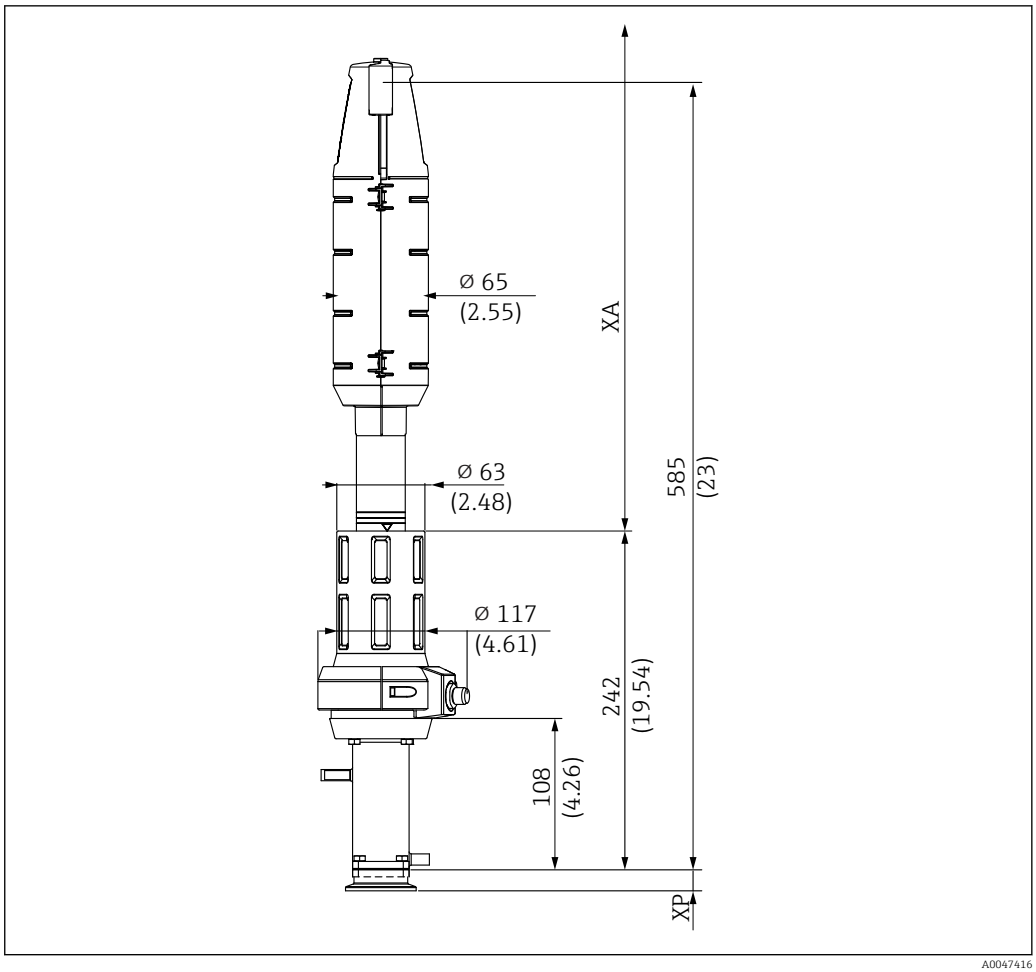

11 Dimensions for long version (78 mm (3.1 in) stroke) with manual drive in service position in mm (in)

XP Height of particular process connection (see table below)
XA Necessary mounting distance for sensor replacement

A free path length XA above the drive is required to replace the sensors:

XA is 440 mm (17.3 in) for 225 mm sensors

XA is 610 mm (24.02 in) for 360 mm sensors

Double chamber

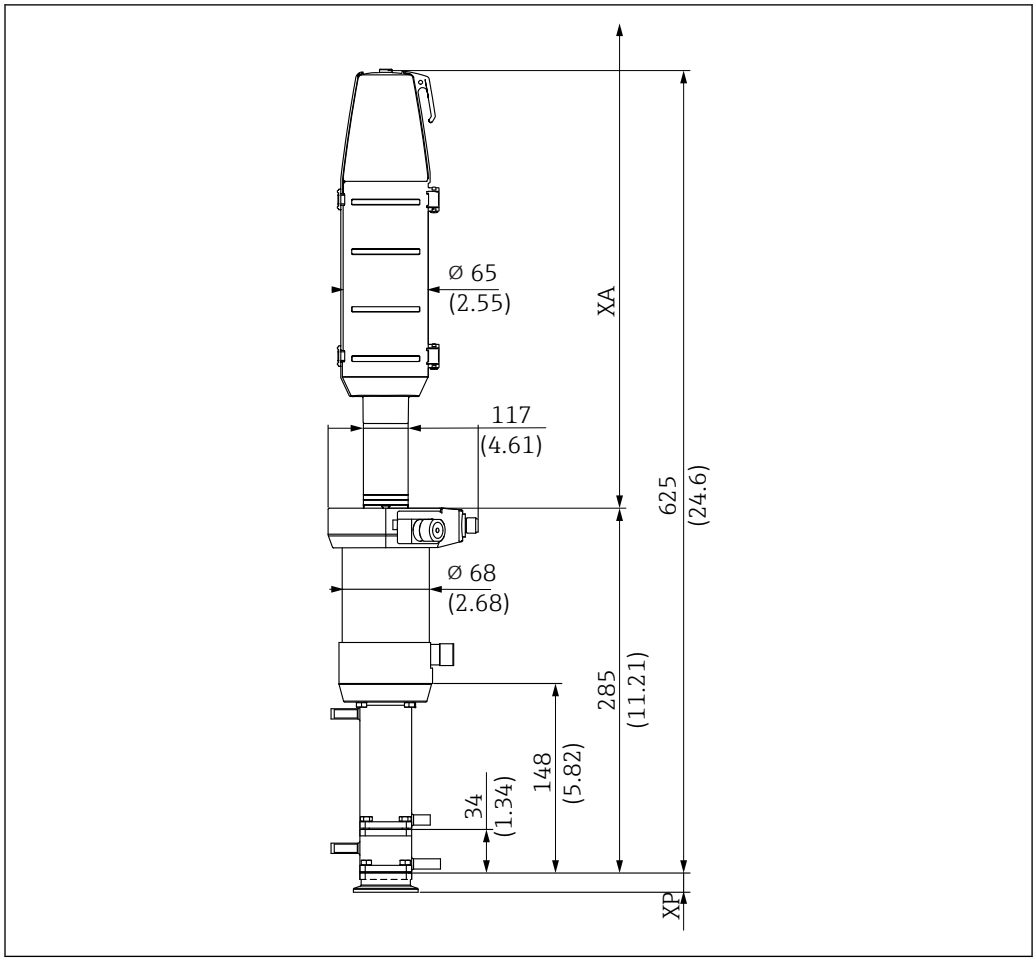

12 Dimensions of double chamber in mm (in)

XP Height of particular process connection (see table below)
XA Necessary mounting distance for sensor replacement

A free path length XA above the drive is required to replace the sensors:

XA is 440 mm (17.3 in) for 225 mm sensors

XA is 610 mm (24.02 in) for 360 mm sensors

Process connection height

Process connection		Height XP in mm (in)
CA Clamp ISO 2852, ASME BPE-2012, 1½"	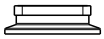 A0021866	14.9 (0.59)
CB Clamp ISO 2852, ASME BPE-2012, 2"	 A0021867	19.5 (0.77)
CC Clamp ISO 2852, ASME BPE-2012, 2½"	 A0021869	13.0 (0.51)
DA Aseptic DN 25 clampable DIN 11864-3 A, grooved clamp connector	 A0021871	16.0 (0.63)
DC Aseptic DN 50 screw-in DIN 11864-1 A	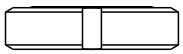 A0021872	16.0 (0.63)
DF Aseptic DN 50 grooved flange DIN 11864-2 A	 A0021874	14.2 (0.56)
EA NEUMO BioControl D 65	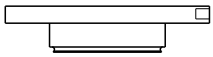 A0021875	25.0 (0.98)
MA Dairy fitting DN 50 DIN 11851 (EHEDG approval only with seal from Siersema)	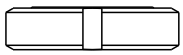 A0021879	14.5 (0.57)
NA DN 25 ▪ Thread ISO 228 G1¼" ▪ Compatible with hook wrench, DIN 1810 flat face **NOTICE** **Mounting with pipe wrench causes damage.** ► Use a hook wrench for mounting and removal.	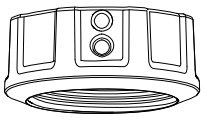 A0054908	31.1 (1.22)
VA Varivent flange N (DN 40 to 100)	 A0021873	19.0 (0.75)

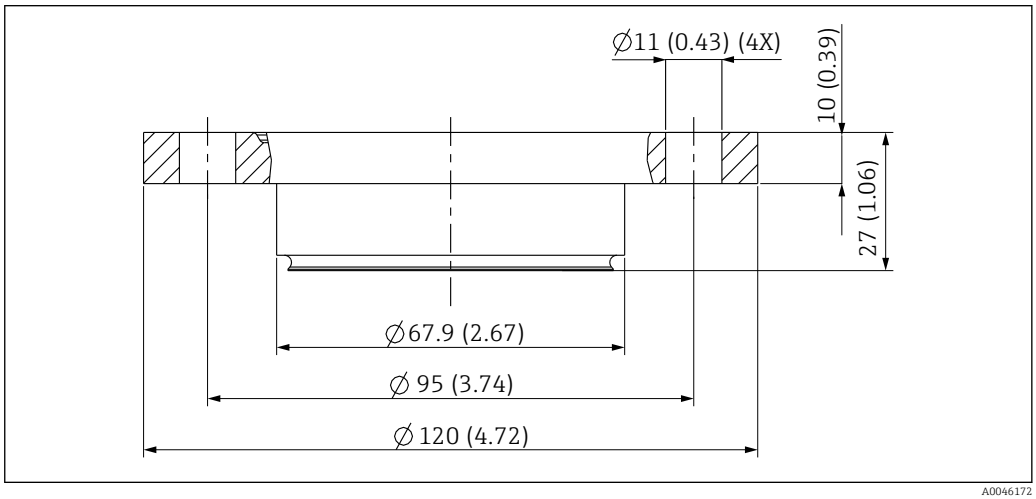

13 *Dimensions of EA NEUMO BioControl D 65 in mm (in)*

Immersion depths

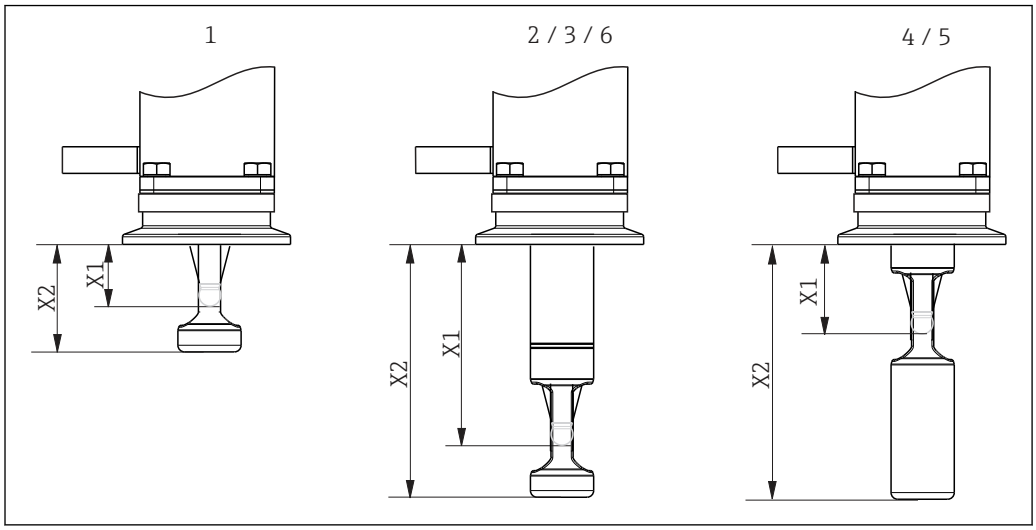

14 *Immersion depths for different service chambers*

1 *Single chamber/36 mm stroke/225 mm sensor incl. KCI*
2 *Single chamber/78 mm stroke/225 mm sensor excl. KCl*
3 *Single chamber/78 mm stroke/360 mm sensor incl. KCI*
4 *Double chamber/78 mm stroke/225 mm sensor excl. KCl/service position, "inner" service chamber*
5 *Double chamber/78 mm stroke/360 mm sensor incl. KCl/service position, "inner" service chamber*
6 *Double chamber/78 mm stroke/360 mm sensor incl. KCl/service position, "front" service chamber*

Immersion depths in mm (in)

		Service chamber					
Process connection		**1**	**2**	**3**	**4**	**5**	**6**
CA Clamp ISO 2852 ASME BPE-2012 1½"	X1 X2	20.6 (0.81) 31.6 (1.24)	62.1 (2.44) 73.1 (2.88)	62.1 (2.44) 73.1 (2.88)	28.1 (1.11) 73.1 (2.88)	28.1 (1.11) 73.1 (2.88)	62.1 (2.44) 73.1 (2.88)
CB Clamp ISO 2852 ASME BPE-2012 2"	X1 X2	16.1 (0.63) 27.1 (1.07)	57.6 (2.27) 68.6 (2.70)	57.6 (2.27) 68.6 (2.70)	23.6 (0.93) 68.6 (2.70)	23.6 (0.93) 68.6 (2.70)	57.6 (2.27) 68.6 (2.70)
CC Clamp ISO 2852 ASME BPE-2012 2½"	X1 X2	22.6 (0.89) 33.6 (1.32)	64.1 (2.52) 75.1 (2.96)	64.1 (2.52) 75.1 (2.96)	30.1 (1.19) 75.1 (2.96)	30.1 (1.19) 75.1 (2.96)	64.1 (2.52) 75.1 (2.96)
DA Aseptic DN 25 clampable DIN 11864-3 A	X1 X2	19.6 (0.77) 30.6 (1.20)	61.1 (2.41) 72.1 (2.84)	61.1 (2.41) 72.1 (2.84)	27.1 (1.07) 72.1 (2.84)	27.1 (1.07) 72.1 (2.84)	61.1 (2.41) 72.1 (2.84)
DC Aseptic DN 50 screw-in DIN 11864-1 A	X1 X2	27.1 (1.07) 39.0 (1.53)	68.6 (2.70) 79.6 (3.13)	68.6 (2.70) 79.6 (3.13)	34.6 (1.36) 79.6 (3.13)	34.6 (1.36) 79.6 (3.13)	68.6 (2.70) 79.6 (3.13)
DF Aseptic DN 50 Grooved flange DIN 11864-2 A	X1 X2	21.4 (0.84) 32.4 (1.28)	62.9 (2.48) 73.9 (2.91)	62.9 (2.48) 73.9 (2.91)	28.9 (1.14) 73.9 (2.91)	28.9 (1.14) 73.9 (2.91)	62.9 (2.48) 73.9 (2.91)
EA NEUMO BioControl D 65	X1 X2	27.6 (1.09) 38.5 (1.51)	69.1 (2.72) 80.1 (3.15)	69.1 (2.72) 80.1 (3.15)	35.1 (1.38) 80.1 (3.15)	35.1 (1.38) 80.1 (3.15)	69.1 (2.72) 80.1 (3.15)
MA Dairy fitting DN 50 DIN 11851	X1 X2	21.1 (0.83) 32.1 (1.26)	62.6 (2.46) 73.6 (2.90)	62.6 (2.46) 73.6 (2.90)	28.6 (1.13) 73.6 (2.90)	28.6 (1.13) 73.6 (2.90)	62.6 (2.46) 73.6 (2.90)
NA DN 25 Thread ISO 228 G1¼"	X1 X2		70.4 (2.77) 81.4 (3.20)	70.4 (2.77) 81.4 (3.20)			
VA Varivent flange N (DN 40 to DN 100)	X1 X2	16.6 (0.65) 27.6 (1.09)	58.1 (2.29) 69.1 (2.72)	58.1 (2.29) 69.1 (2.72)	24.1 (0.95) 69.1 (2.72)	24.1 (0.95) 69.1 (2.72)	58.1 (2.29) 69.1 (2.72)

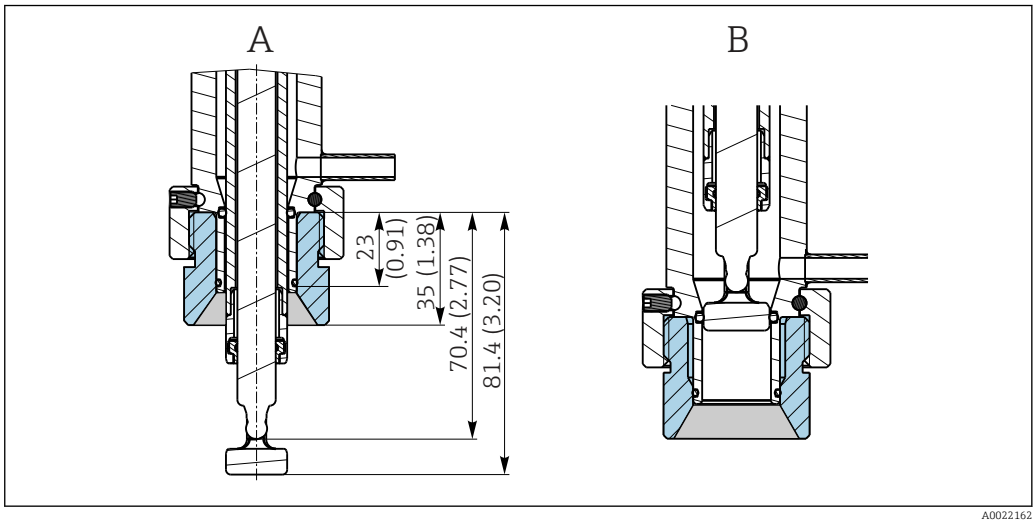

15 *Immersion depth in mm (in) for process connection NA DN 25 male thread ISO 228 G1¼ (service chambers 2 and 3) in measuring and service position, mounted on weld-in adapter G1¼"*

A Measuring position
B Service position

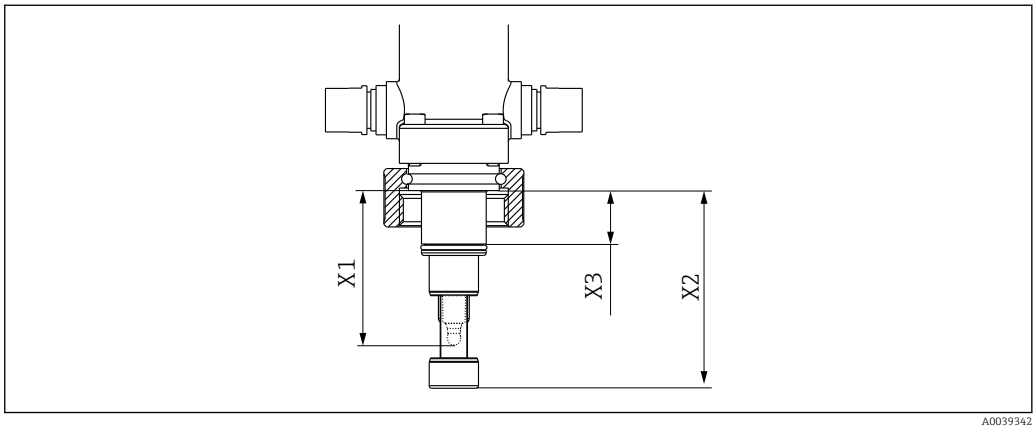

16 *Immersion depth in mm (in) for process connection NA DN 25 male thread ISO 228 G1¼*

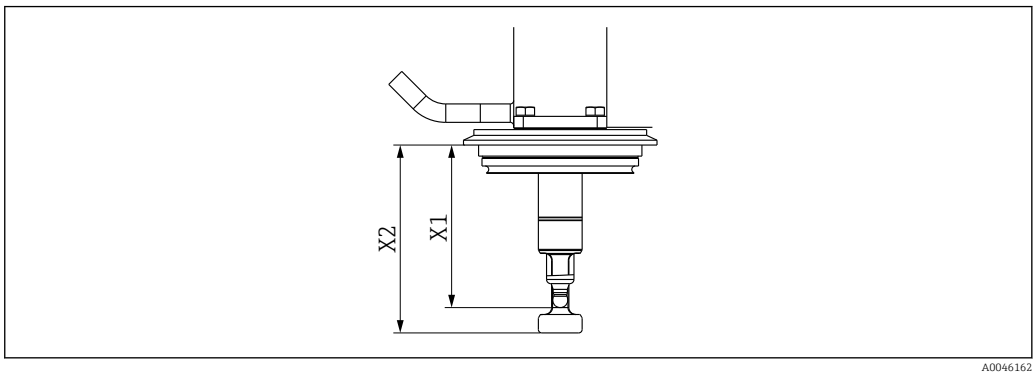

17 *Immersion depth in mm (in) for process connection VA Varivent flange N*

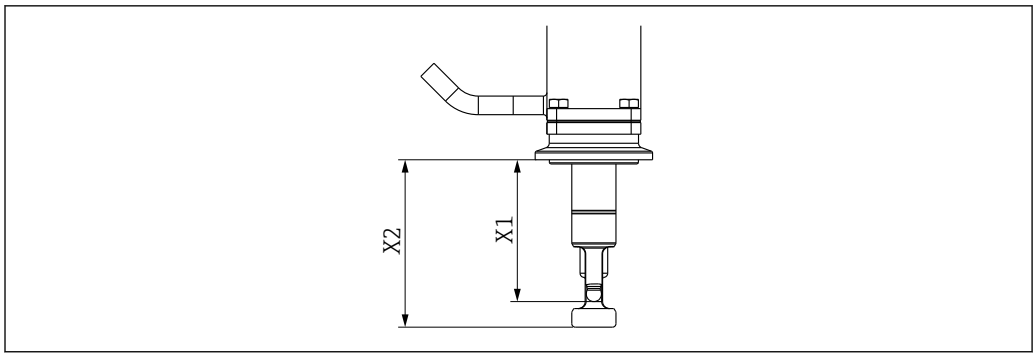

18 Immersion depth in mm (in) for process connections CA, CB, CC, DA clamp (sample illustration)

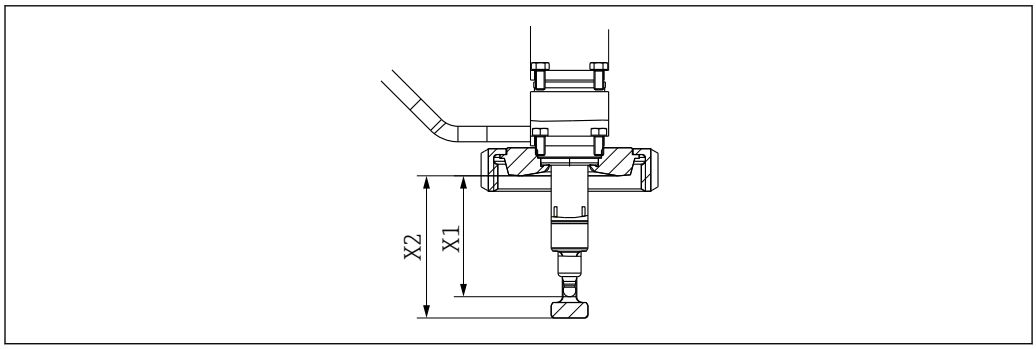

19 Immersion depth in mm (in) for process connection MA Dairy fitting DN 50 DIN 11851

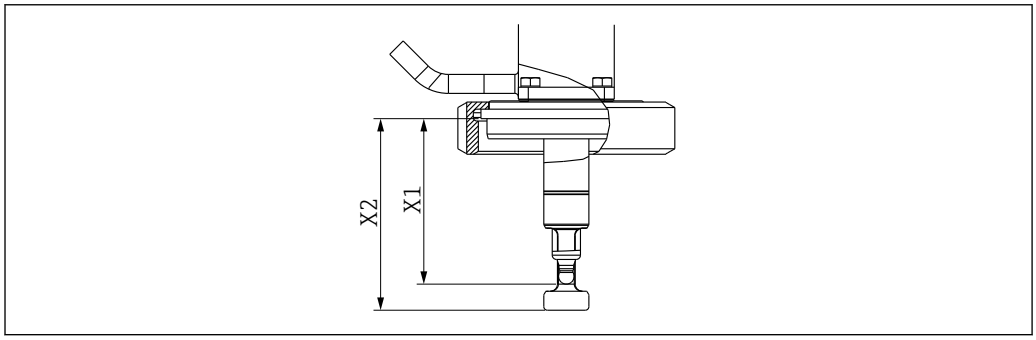

20 Immersion depth in mm (in) for process connection DC Aseptic DN 50 screw-in DIN 11864-1 A

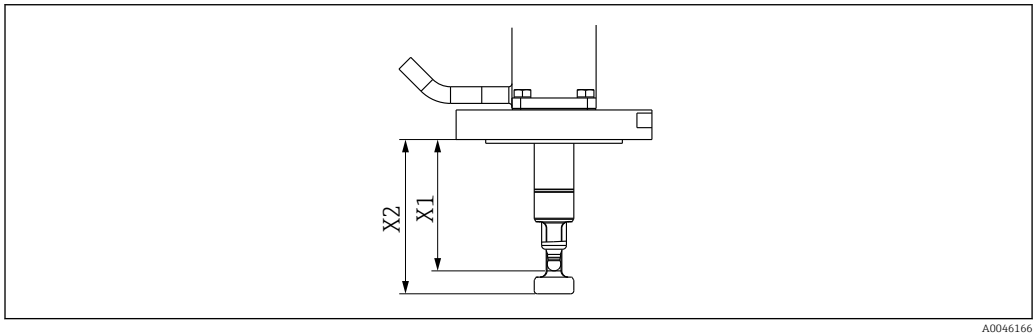

21 Immersion depth in mm (in) for process connection DF Aseptic DN 50 grooved flange DIN 11864-2 A

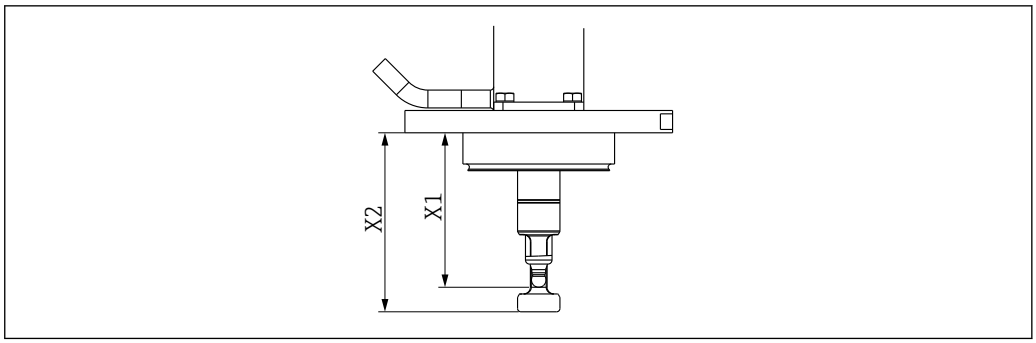

A0046157

22 Immersion depth in mm (in) for process connection EA NEUMO Biocontrol D65

Rinse chamber volume

	Volume cm³ (in³) (max.)	Volume cm³ (in³) (min.)
Single chamber, short stroke	20.94 (1.28)	10.51 (0.64)
Single chamber, long stroke	42.97 (2.62)	20.77 (1.27)
Double chamber (front)	18.53 (1.13)	9.80 (0.6)
Double chamber (rear)	77.49 (4.72)	47.04 (2.87)
Double chamber (total)	96.02 (5.87)	56.84 (3.47)

Weight

Depends on version:

Pneumatic drive: 3.8 to 6 kg (8.4 to 13.2 lbs) depending on version

Manual drive: 3 to 4.5 kg (6.6 to 9.9 lbs) depending on version

Materials

In contact with medium	
Seals:	EPDM / FKM / FFKM
Immersion tube:	Stainless steel 1.4435 (AISI 316L) Ra < 0.76 / Ra < 0.38
Process connection, service chamber	Stainless steel 1.4435 (AISI 316L) Ra < 0.76
Rinse connections:	Stainless steel 1.4435 (AISI 316L)

Not in contact with medium	
Manual drive:	Stainless steel 1.4301 (AISI 304) or 1.4404 (AISI 316L), PPS CF15 plastics, PBT, PP
Pneumatic drive:	Stainless steel 1.4301 (AISI 304) or 1.4404 (AISI 316L), PBT plastics, PP

Rinse connections

Option	Description
Pipe 6/8mm ID/OD	Pipe DIN 11866 series A 8 x 1 hygiene class H4 Internal diameter 6 mm (0.24 in) Outer diameter 8 mm (0.31 in) Ra ≤ 0.38
G1/4 female	Female thread DIN EN ISO 228 G1/4" Pipe internal diameter 6 mm (0.24 in) Surface (excluding thread): Ra ≤ 0.38
NPT1/4 female	Female thread ASME B 1.20.1 – 1983 1/4" NPT Pipe internal diameter 6 mm (0.24 in) Surface (excluding thread): Ra ≤ 0.38
Clamp D6/D25	Clamp nozzle DIN 32676 Pipe internal diameter 6 mm (0.24 in) Outer diameter, clamp 25 mm Ra ≤ 0.4

Surface finish may vary depending on the manufacturing process.

Certificates and approvals

Current certificates and approvals for the product are available at www.endress.com on the relevant product page:

1. Select the product using the filters and search field.
2. Open the product page.
3. Select **Downloads**.

Additional certification

ATEX - 2014/34/EU
The assembly does not fall within the scope of the directive. However, if conditions for safe use are adhered to, it may be deployed in the hazardous area.

CE/Pressure Equipment Directive
The assembly has been designed according to good engineering practice as per Article 4, Paragraph 3 of the Pressure Equipment Directive 2014/68/EU and is therefore not required to bear the CE label.

The following test certificates, attestations and declarations (e.g., certificates of conformity) are available for the product depending on the selected version:
- ASME BPE CoC
- FDA 21 CFR
- 3-A Certificate
- EHEDG Certificate
- EU Food Contact Materials REG (EC) 1935/2004
- CRN
- CN Food Contact Materials GB 4806
- Inspection certificate 3.1
- Roughness test
- Delta ferrite measurement incl. inspection certificate 3.1

Ordering information

Ordering instructions

Create the order code for the assembly as follows:

1. Is the assembly used in the hazardous or non-hazardous area?
2. Select the drive type and the limit position switches.
3. Select the type of service chamber.
4. What material should the wetted seals be made of?
5. What material should the wetted surfaces be made of?
6. Select the suitable process connection.
7. Which connections should the service chamber have?
8. Select the cleaning position.

Order the accessories as follows:
- If you wish to order the accessories together with the assembly, then use the accessory code of the product structure.
- If you only wish to order accessories, then use the order numbers from the "Accessories" section.

Product page

www.endress.com/cpa875

Product Configurator

1. **Configure**: Click this button on the product page.
2. Select **Extended selection**.
   ↳ The Configurator opens in a separate window.
3. Configure the device according to your requirements by selecting the desired option for each feature.
   ↳ In this way, you receive a valid and complete order code for the device.
4. **Add to cart**: Add the configured product to the shopping cart.

For many products, you also have the option of downloading CAD or 2D drawings of the selected product version.

5. **CAD**: Open this tab.
   ↳ A drawing window is displayed. You have a choice between different views. You can download these in selectable formats.

Scope of delivery

The scope of delivery comprises:
- Ordered version of assembly
- Operating Instructions

Accessories

The following are the most important accessories available at the time this documentation was issued.

Listed accessories are technically compatible with the product in the instructions.

1. Application-specific restrictions of the product combination are possible.
   Ensure conformity of the measuring point for the application. This is the responsibility of the operator of the measuring point.
2. Pay attention to the information in the instructions for all products, particularly the technical data.
3. For accessories not listed here, please contact your Service or Sales Center.

The following accessories can be ordered via the product structure or the XPC0003 spare part structure:

- Weld-in adapter G1¼, straight, 35 mm, 1.4435 (AISI 316 L), safety nozzle
- Weld-in adapter G1¼, angled, 35 mm, 1.4435 (AISI 316 L), safety nozzle

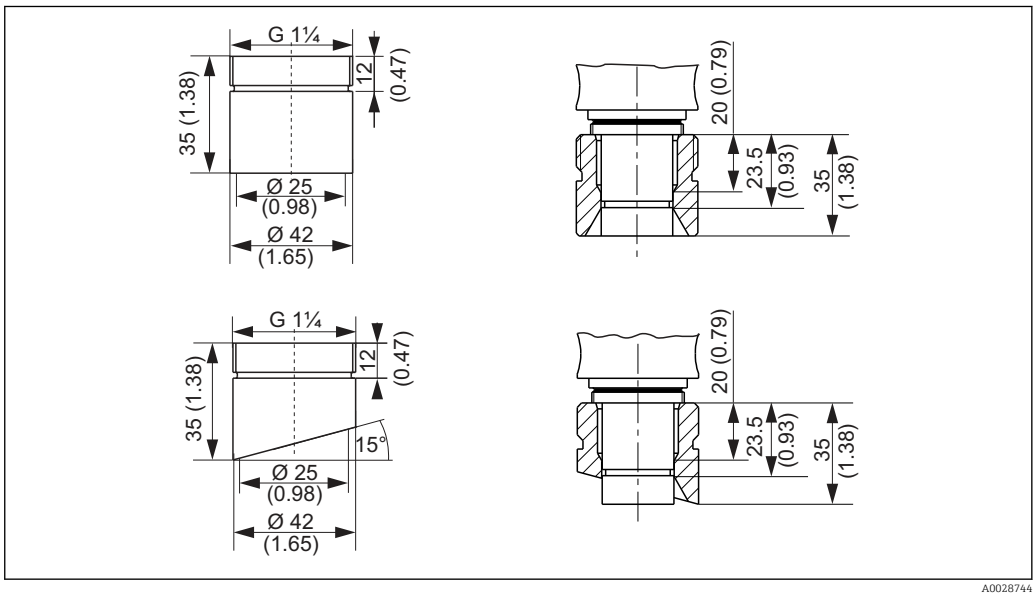

23 Weld-in adapter (safety nozzle), dimensions in mm (in)

- Dummy plug G1¼, 1.4435 (AISI 316 L), FPM
- Sensor dummy 225 mm, 1.4435 (AISI 316 L), Ra = 0.38 µm
- Sensor dummy 360 mm, 1.4435 (AISI 316 L), Ra = 0.38 µm
- Kit, EPDM seals only for process connection G1¼, wetted parts, single chamber
- Kit, FKM seals only for process connection G1¼, wetted parts, single chamber
- Kit, FFKM seals only for process connection G1¼, wetted parts, single chamber
- Kit, EPDM seals, wetted parts, single chamber, not for process connection G1¼
- Kit, FKM seals, wetted parts, single chamber, not for process connection G1¼
- Kit, FFKM seals, wetted parts, single chamber, not for process connection G1¼
- Kit, EPDM seals, wetted parts, double chamber, all process connections
- Kit, FKM seals, wetted parts, double chamber, all process connections
- Kit, FFKM seals, wetted parts, double chamber, all process connections
- Kit, seals not in contact with the medium
- Cable, plug-in, limit switch, M12, 5 m
- Cable, plug-in, limit switch, M12, 10 m
- Tool in case for installation/removal
- Kit, Klüber Paraliq GTE 703 lubricant (60g)
- Output interface terminals, version: CPA871-620-R7
  NAMUR terminals for limit position switches
  - Operation of 8V DC feedback signals on 24V DC devices
  - Suitable for top-hat rail mounting

Device-specific accessories

Sensors

pH sensors

Memosens CPS11E
- pH sensor for standard applications in process and environmental engineering
- Digital with Memosens 2.0 technology
- Product Configurator on the product page: www.endress.com/cps11e

Technical Information TI01493C

Orbisint CPS11
- pH sensor for process technology
- With dirt-repellent PTFE diaphragm
- Product Configurator on the product page: www.endress.com/cps11

Technical Information TI00028C

Memosens CPS31E
- pH sensor for standard applications in drinking water and swimming pool water
- Digital with Memosens 2.0 technology
- Product Configurator on the product page: www.endress.com/cps31e

Technical Information TI01574C

Memosens CPS41E
- pH sensor for process technology
- With ceramic junction and KCl liquid electrolyte
- Digital with Memosens 2.0 technology
- Product Configurator on the product page: www.endress.com/cps41e

Technical Information TI01495C

Ceraliquid CPS41
- pH electrode with ceramic junction and KCl liquid electrolyte
- Product Configurator on the product page: www.endress.com/cps41

Technical Information TI00079C

Memosens CPS61E
- pH sensor for bioreactors in life sciences and for the food industry
- Digital with Memosens 2.0 technology
- Product Configurator on the product page: www.endress.com/cps61e

Technical Information TI01566C

Memosens CPS71E
- pH sensor for chemical process applications
- Digital with Memosens 2.0 technology
- Product Configurator on the product page: www.endress.com/cps71e

Technical Information TI01496C

Ceragel CPS71
- pH electrode with reference system including ion trap
- Product Configurator on the product page: www.endress.com/cps71

Technical Information TI00245C

Memosens CPS91E
- pH sensor for heavily polluted media
- Digital with Memosens 2.0 technology
- Product Configurator on the product page: www.endress.com/cps91e

Technical Information TI01497C

Orbipore CPS91
- pH electrode with hole junction for media with high dirt load
- Product Configurator on the product page: www.endress.com/cps91

Technical Information TI00375C

ORP sensors

Memosens CPS12E
- ORP sensor for standard applications in process and environmental engineering
- Digital with Memosens 2.0 technology
- Product Configurator on the product page: www.endress.com/cps12e

Technical Information TI01494C

Orbisint CPS12
- ORP sensor for process technology
- Product Configurator on the product page: www.endress.com/cps12

Technical Information TI00367C

Memosens CPS42E
- ORP sensor for process technology
- Digital with Memosens 2.0 technology
- Product Configurator on the product page: www.endress.com/cps42e

Technical Information TI01575C

Ceraliquid CPS42
- ORP electrode with ceramic junction and KCl liquid electrolyte
- Product Configurator on the product page: www.endress.com/cps42

Technical Information TI00373C

Memosens CPS72E
- ORP sensor for chemical process applications
- Digital with Memosens 2.0 technology
- Product Configurator on the product page: www.endress.com/cps72e

Technical Information TI01576C

Ceragel CPS72
- ORP electrode with reference system including ion trap
- Product Configurator on the product page: www.endress.com/cps72

Technical Information TI00374C

pH ISFET sensors

Memosens CPS47E
- ISFET sensor for pH measurement
- Digital with Memosens 2.0 technology
- Product Configurator on the product page: www.endress.com/cps47e

Technical Information TI01616C

Memosens CPS77E
- Sterilizable and autoclavable ISFET sensor for pH measurement
- Digital with Memosens 2.0 technology
- Product Configurator on the product page: www.endress.com/cps77e

Technical Information TI01396

Combined pH/ORP sensors

Memosens CPS16E
- pH/ORP sensor for standard applications in process technology and environmental engineering
- Digital with Memosens 2.0 technology
- Product Configurator on the product page: www.endress.com/cps16e

Technical Information TI01600C

Memosens CPS76E
- pH/ORP sensor for process technology
- Digital with Memosens 2.0 technology
- Product Configurator on the product page: www.endress.com/cps76e

Technical Information TI01601C

Memosens CPS96E
- pH/ORP sensor for heavily polluted media and suspended solids
- Digital with Memosens 2.0 technology
- Product Configurator on the product page: www.endress.com/cps96e

Technical Information TI01602C

Conductivity sensors

Memosens CLS82E
- Hygienic conductivity sensor
- Digital with Memosens 2.0 technology
- Product Configurator on the product page: www.endress.com/cls82e

Technical Information TI01529C

The sensor is suitable for the assembly with the following sensor lengths: 120 mm (4.7 in), 215 mm (8.5 in) and 360 mm (14.2 in)

Oxygen sensors

Oxymax COS22E
- Sterilizable sensor for dissolved oxygen
- Digital with Memosens 2.0 technology
- Product Configurator on the product page: www.endress.com/cos22e

Technical Information TI00446C

The sensor is suitable for the assembly with the following sensor lengths: 120 mm (4.7 in), 215 mm (8.5 in) and 360 mm (14.2 in)

Oxymax COS22
- Sterilizable sensor for dissolved oxygen
- With Memosens technology or as an analog sensor
- Product Configurator on the product page: www.endress.com/cos22

Technical Information TI00446C

Absorption sensor

OUSBT66
- NIR absorption sensor for the measurement of cell growth and biomass
- Sensor version suitable for pharmaceutical industry
- Product Configurator on the product page: www.endress.com/ousbt66

Technical Information TI00469C

The assembly can only be used with the absorption sensor with the optical path lengths 5 mm (0.2 in) and 10 mm (0.39 in).

Service-specific accessories

Cleaning and calibration systems

Air-Trol CYC10
- Pneumatic control unit for Cleanfit retractable assemblies
- Prepared for use in hazardous areas
- Product Configurator on the product page: www.endress.com/cyc10

Technical Information TI00038C

Cleanfit Control CYC25
- Converts electrical signals into pneumatic signals to control pneumatically-operated retractable assemblies or pumps in conjunction with Liquiline CM44x
- Wide range of control options
- Product Configurator on the product page: www.endress.com/cyc25

Technical Information TI01231C

Liquiline Control CDC90
- Fully automatic cleaning and calibration system for pH and ORP measuring points in all industries
- Cleaned, validated, calibrated and adjusted
- Product Configurator on the product page: www.endress.com/cdc90

Technical Information TI01340C

Installation material for rinse connections

Kit, water filter
- Water filter (dirt trap) 100 µm, complete, incl. angle bracket
- Order No. 71390988

Pressure reducer kit
- Complete, incl. manometer and angle bracket
- Order No. 71390993

Hose connection set G¼, DN 12
- 1.4404 (AISI 316L) 2 x
- Order No. 51502808

Hose connection set G¼, DN 12
- PVDF (2 x)
- Order No. 50090491



www.addresses.endress.com

Endress+Hauser

People for Process Automation