SEW EURODRIVE

Catalog



Industrial Gear Units

XP130 – XP250 Series Planetary Gear Units

Torque Range from 600 kNm – 5200 kNm

Edition 03/2017

22766650/EN



Table of Contents

1 Introduction 5
1.1 The SEW-EURODRIVE group of companies 5
1.2 Products and systems from SEW-EURODRIVE 6
1.3 Product names and trademarks 9
1.4 Copyright notice 9

2 Product description and overview of types 10
2.1 Design features 11
2.2 Your benefits at a glance 11
2.3 Application areas 11
2.4 General information 12
2.5 Sizes and torque ratings 14
2.6 Mounting positions 15
2.7 Nameplate 16
2.8 Type designation 17
2.9 Type designations of options 18
2.10 Output shaft types 19
2.11 Basic designs 22
2.12 Coating and surface protection systems 24
2.13 Corrosion and surface protection 25
2.14 Storage and transport conditions 26
2.15 Lubrication type 28
2.16 Checking the oil level/filling oil 28
2.17 Overview of sealing systems 29

3 Options 30
3.1 Torque arm 30
3.2 Backstop 31

4 Project planning for gear units 32
4.1 Selecting the application factors 32
4.2 Calculating the basic data 34
4.3 Selecting the nominal motor power 35
4.4 Calculating the required nominal gear unit torque – M_{N2} 36
4.5 Checking the peak load states $M_{K2\ per}$ $M_{K2\ max}$ 37
4.6 Checking the bearing service life $L_{h10} \geq L_{h10\ required}$ 38
4.7 Radial and axial forces 39
4.8 Checking the thermal rating P_T 41
4.9 Calculation example 43

5 Permitted lubricants 47
5.1 Guidelines for lubricant selection 47
5.2 Structure of the tables and abbreviations 48
5.3 Explanation of the various lubricants 49
5.4 Lubricant tables 50
5.5 Lubricant fill quantities 53

6 Design and operating notes 55

22766650/EN – 03/2017

6.1 Screws included in the delivery 55
6.2 Screws not included in the delivery 56

7 Gear ratio 57
7.1 XP2P.: 2-stage planetary gear unit 57
7.2 XP3P.: 3-stage planetary gear unit 57
7.3 XP4P.: 4-stage planetary gear unit 58
7.4 XP3F.: 3-stage helical-planetary gear unit 59
7.5 XP4K.: 4-stage bevel-planetary gear unit 59

8 Thermal rating for XP3P. 60

9 Required cooling capacity 61

10 Dimension sheets 62
10.1 Gear unit 62
10.2 Options 67

11 Address directory SEW-EURODRIVE 73

22766650/EN – 03/2017

1 Introduction

1.1 The SEW-EURODRIVE group of companies

1.1.1 Global presence

Driving the world – with innovative drive solutions for all industries and for every application. Products and systems from SEW-EURODRIVE are used all over the world. Be it in the automotive, building materials, food and beverage or metal-processing industry – the decision to use drive technology "made by SEW-EURODRIVE" stands for reliability for both functionality and investment.

We are represented in the most important branches of industry all over the world: with 15 manufacturing plants and 77 Drive Technology Centers worldwide as well as our customer support, which we consider an integrative service that continues our commitment to outstanding quality.

1.1.2 Always the right drive

The SEW-EURODRIVE modular concept offers millions of combinations. This wide selection enables you to choose the correct drive for all applications, each based on the required speed and torque range, available space, and ambient conditions. Gear units and gearmotors offering a unique and finely tuned performance range and the best economic prerequisites to meet your drive requirements.

The modular DR.. motor series includes the energy-efficient motor types IE1 to IE4 and was designed and constructed with all worldwide requirements for energy efficiency classes in mind. The DR.. motor easily meets the requirements for approval and certification in all relevant countries. The energy-efficient drives achieve the highest efficiency in combination with SEW-EURODRIVE gear units.

The gearmotors are electronically enhanced by MOVITRAC® frequency inverters, MOVIDRIVE® drive inverters, and MOVIAXIS® multi-axis servo inverters – a combination that blends perfectly with the existing SEW-EURODRIVE program. As is the case with the mechanical systems, all development, production, and assembly is carried out entirely by SEW-EURODRIVE. In combination with our drive electronics, these drives provide the utmost in flexibility.

Products of the servo drive system, such as low backlash servo gear units, compact servomotors, or MOVIAXIS® multi-axis servo inverters ensure precision and dynamics. From single-axis or multi-axis applications to synchronized process sequences, servo drive systems from SEW-EURODRIVE enable flexible and customized implementation of your applications.

For economical, decentralized installations, SEW-EURODRIVE offers components from its decentralized drive system, such as MOVIMOT®, the gearmotor with integrated frequency inverter, or MOVI-SWITCH®, the gearmotor with integrated switching and protection function. SEW-EURODRIVE has developed hybrid cables to provide cost-effective functional solutions, irrespective of the system philosophy or scope. The latest developments from SEW-EURODRIVE: DRC.. electronic motor, MOVIGEAR® mechatronic drive system, MOVIFIT® decentralized drive controller, MOVIPRO® decentralized drive, positioning, and application controller, as well as MOVITRANS® system components for contactless energy transfer.

Power, quality, and robustness combined in a single standard product: with SEW-EURODRIVE, powerful movements are delivered by industrial gear units with high torques. The modular concept once again ensures optimum adaptation of industrial gear units to meet a wide range of different applications.

22766650/EN – 03/2017

1.1.3 Your ideal partner

Its global presence, extensive product range and broad spectrum of services make SEW-EURODRIVE the ideal partner for the machinery and plant construction industry when it comes to providing drive systems for demanding drive tasks in all industries and applications.

1.2 Products and systems from SEW-EURODRIVE

The products and systems by SEW-EURODRIVE are divided into the following product groups:

- Industrial gear units
- Gearmotors and frequency inverters
- Servo drive systems
- Decentralized drive systems
- MAXOLUTION®

Products and systems used in applications of several groups are listed in a separate group entitled "products and systems covering several product groups". The following tables indicate the products and systems included in the respective product group:

Industrial gear units
• X, MC, ML series helical and bevel-helical gear units • P002 – 102 series planetary gear units • XP130 – 250 series planetary gear units • P-X series planetary bevel-helical gear units • Application solutions with connections – Girth gears – Swing base – Gearmotor – Motor – Coupling – Brake – Lubrication system For conveyor drives, bucket conveyors, agitators, cooling towers, crane systems, and much more

22766650/EN – 03/2017

Gearmotors and frequency inverters		
Gear units / gearmotors	**Motors**	**Frequency inverters**
• Helical gear units / helical gearmotors • Parallel-shaft helical gear units / parallel-shaft helical gearmotors • Helical-bevel gear units / gearmotors • Helical-worm gear units / helical-worm gearmotors • SPIROPLAN® right-angle gearmotors • EMS drives • Geared torque motors • Pole-changing gearmotors • Variable-speed gear units / variable-speed gearmotors • Aseptic gearmotors • Explosion-proof gear units/ gearmotors • Explosion-proof variable-speed gear units / variable-speed gearmotors	• Asynchronous AC motors / AC brakemotors • Pole-changing AC motors / AC brakemotors • Energy-efficient motors • Explosion-proof AC motors / AC brakemotors • Torque motors • Single-phase motors / single-phase brakemotors • Asynchronous linear motors	• MOVITRAC® frequency inverters • MOVI4R-U® frequency inverters • MOVIDRIVE® drive inverters • Control, technology and communication options for inverters

Servo drive systems		
Servo gear units / gearmotors	**Servomotors**	**Servo drive inverters / servo inverters**
• Low backlash planetary servo gear units / planetary gearmotors • Low backlash helical-bevel servo gear units / helical-bevel gear units • R, F, K, S, W gear units / gearmotors • Explosion-proof servo gear units / servo gearmotors	• Asynchronous servomotors / servo brakemotors • Synchronous servomotors / servo brakemotors • Explosion-proof servomotors / servo brakemotors • Synchronous linear motors	• MOVIDRIVE® servo drive inverters • MOVIAXIS® multi-axis servo inverter • Control, technology and communication options for servo drive inverters and servo inverters

22766650/EN – 03/2017

Decentralized drive systems		
Decentralized drives	**Communication and installation**	**Contactless energy transfer system**
• DRC.. electronic motor / MOVIGEAR® mechatronic drive systems – DBC – Direct Binary Communication – DAC – Direct AS-Interface Communication – DSC – Direct SBus Communication – SNI – Single Line Network Installation • MOVIMOT® gearmotors with integrated frequency inverter • MOVIMOT® motors / brakemotors with integrated frequency inverter • MOVI-SWITCH® gearmotors with integrated switching and protection functions • MOVI-SWITCH® motors / brakemotors with integrated switching and protection function • Explosion-proof MOVIMOT® and MOVI-SWITCH® gearmotors	• Fieldbus interfaces • Field distributors for decentralized installation • MOVIFIT® product range – MOVIFIT® FDC for controlling MOVIGEAR® and DRC.. drive units – MOVIFIT® MC for controlling MOVIMOT® drives – MOVIFIT® SC with integrated electronic motor switch – MOVIFIT® FC with integrated frequency inverter • MOVIPRO® product range – MOVIPRO® SDC decentralized drive and positioning control	• MOVITRANS® system – Stationary components for energy supply – Mobile components for energy consumption – Line cables and installation material

MAXOLUTION®
• MAXOLUTION® packages for predefined application solutions • MAXOLUTION® systems for customer-specific system solutions and plants

Products and systems covering several product groups
• Operator panels • MOVI-PLC® drive-based control system • Components of the type "functional safety" • Diagnostic units

In addition to its products and systems, SEW-EURODRIVE offers a comprehensive range of services. These include:

- Technical consulting
- User software
- Seminars and training
- Extensive technical documentation
- Worldwide customer service

Visit our website at

22766650/EN – 03/2017

→ **www.sew-eurodrive.com**

The website provides comprehensive information and services.

1.3 Product names and trademarks

All product names included in this documentation are trademarks or registered trademarks of the respective titleholders.

1.4 Copyright notice

© 2017 SEW-EURODRIVE. All rights reserved. Unauthorized reproduction, modification, distribution or any other use of the whole or any part of this documentation is strictly prohibited.

22766650/EN – 03/2017

2 Product description and overview of types

The series consists of 13 sizes of planetary gear units with nominal torques from 600 kNm to 5200 kNm.

As the load is distributed to several planet gears, a significantly higher power density and thus smaller dimensions are possible compared to helical and bevel-helical gear units.

Planetary gear units can have the following options:

- Squared output shaft or hollow output shaft with shrink disk and others
- Foot mounting or torque arm
- Cooling lubrication system
- Articulated shaft
- Safety clutch

The following figure shows an example of a planetary gear unit with squared output shaft, safety clutch, lubrication unit and foot mounting.

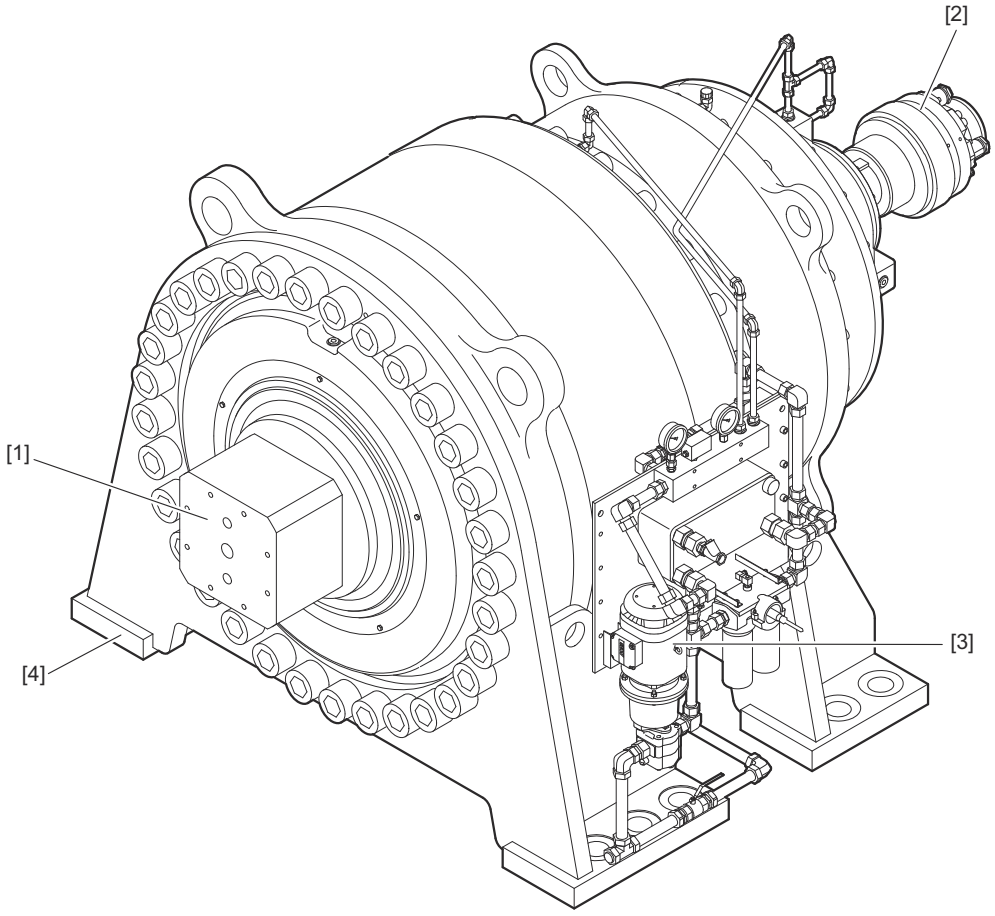

12502214155

[1] Squared output shaft
[2] Safety clutch
[3] Oil-water cooler for pressure lubrication
[4] Foot

22766650/EN – 03/2017

2.1 Design features

Planetary gear units

- Can transmit a high torque
- Are very compact
- Offer a high degree of torsional rigidity

2.2 Your benefits at a glance

- Short, compact design with high degree of operational reliability.
- Standardized units, which means excellent price/performance ratio and short delivery times

2.3 Application areas

Planetary gear units are mainly used in applications where low output speeds and high torques are required.

For example:

- For mining industry
- For sugar industry
- For drying processes in the construction materials industry
- For filling processes in the cement industry
- For slow-running material processing systems, e.g. mixers, rotary filters
- For all branches of industry with similar requirements
- In the food industry
- And many other areas

22766650/EN – 03/2017

2.4 General information

2.4.1 Important information

- The illustrations in the catalog are examples and are not binding.
- The specified lubricant quantities are guide values only. Use the marks on the oil dipstick or oil level glass to determine the oil level.
- On delivery, the planetary gear units are ready for operation, but not filled with oil. However, it is possible to have the gear units delivered filled with oil.
- Oil viscosity and grade must comply with those specified on the nameplate.
- The weights shown are non-binding average values.
- The buyer must provide protection against unintentional contact with moving parts. The applicable safety regulations of the country in which the unit will be used are to be followed.

22766650/EN – 03/2017

2.4.2 Power and torque

The power and torque values listed in the catalog apply to standard design and standard lubrication of the planetary gear unit under normal environmental conditions.

Please note that the motor power shown in the selection tables for planetary gear units is subject to selection. However, the output torque and the desired output speed are essential for the application and need to be checked.

2.4.3 Speeds

The specified output speeds of the planetary gear unit are recommended values. You can calculate the nominal output speed based on the rated speed of the motor and the gear unit ratio. Note that the actual output speed depends on the motor load and the supply system conditions.

2.4.4 Noise

The noise levels of all planetary gear units are well within the maximum permitted noise levels set forth in ISO 8579-1 for gear units and EN 60034 for motors.

2.4.5 Painting

Planetary gear units are painted in "blue grey" / RAL 7031 as per DIN 1843 as standard. Special paints are available on request.

2.4.6 Weight information

Please note that all weights shown in the catalog exclude the oil fill because the lubricant fill quantity depends on the mounting position.

2.4.7 Accessibility

The planetary gear units must be mounted on the driven machine in such a way that there is enough space for both axially and radially maintenance.

22766650/EN – 03/2017

2.5 Sizes and torque ratings

Size	M_{N2} in kNm
XP130	600
XP140	730
XP150	900
XP160	1100
XP170	1350
XP180	1600
XP190	1900
XP200	2300
XP210	2850
XP220	3300
XP230	4000
XP240	4600
XP250	5200

22766650/EN – 03/2017

2.6 Mounting positions

The mounting position defines the position of the gear unit housing in the space and is designated **M1**. The mounting positions apply to planetary gear units with solid shafts and hollow shafts.

For other mounting positions, please contact SEW-EURODRIVE.

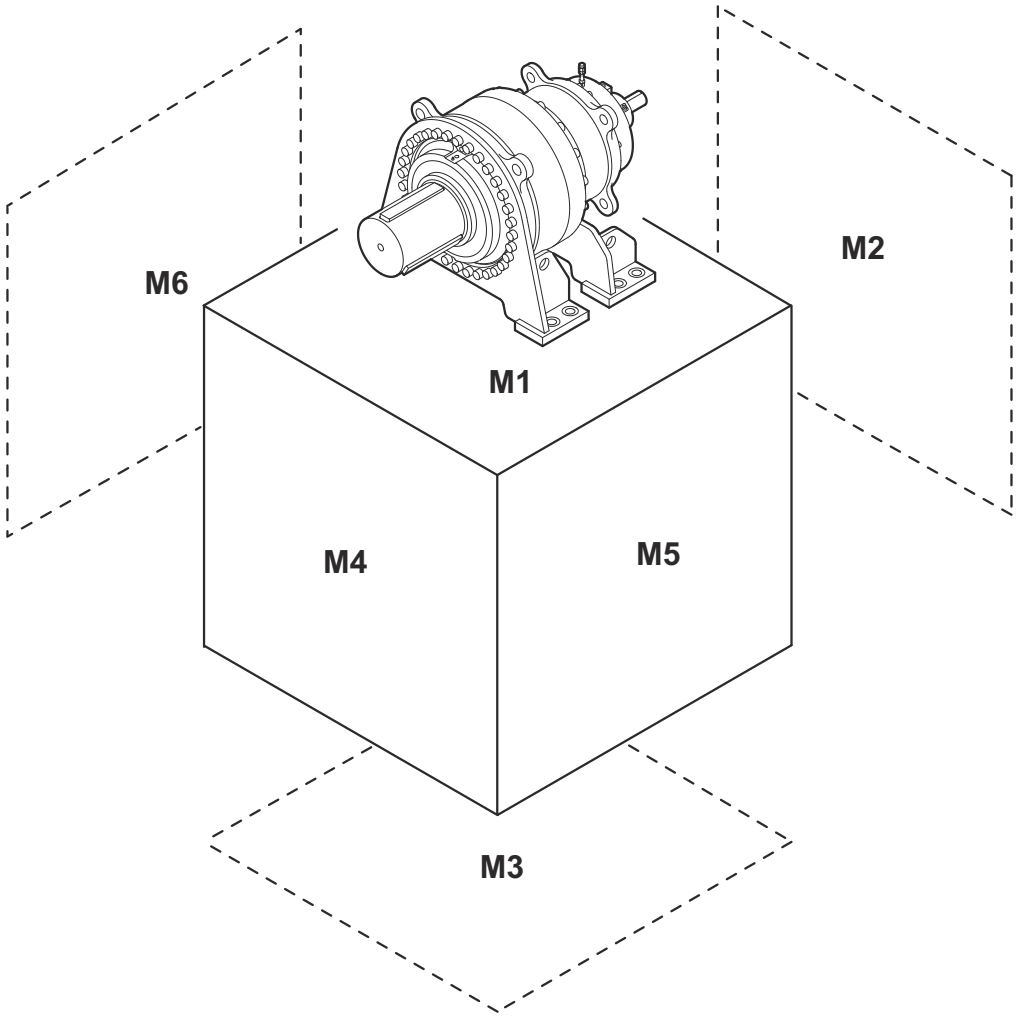

12512392075

22766650/EN – 03/2017

2.7 Nameplate

The following example shows the layout of a nameplate.

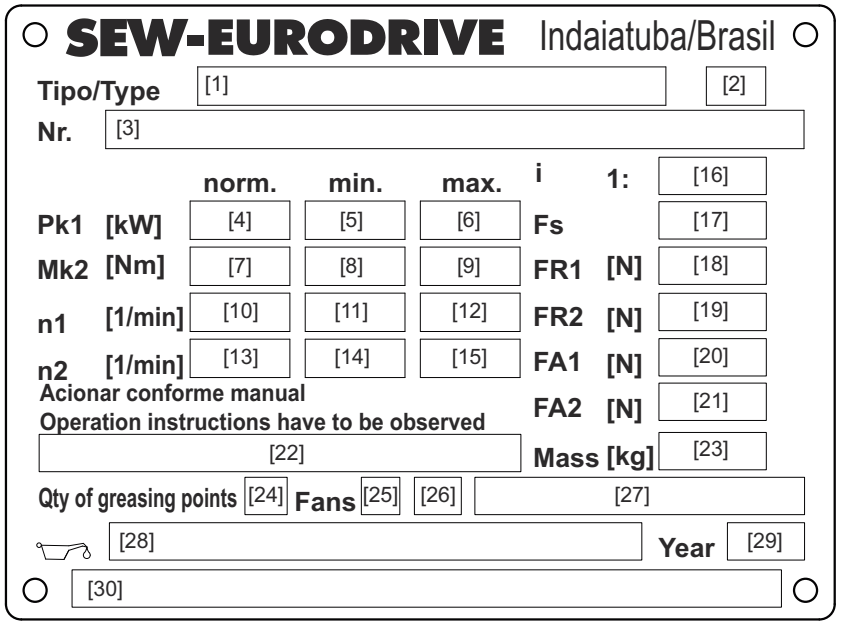

12512268427

[1]	Planetary gear unit type	[16]	Exact gear unit ratio of the gear unit
[2]	(Empty)	[17]	Service factor
[3]	Number of the customer order	[18]	Radial load, input end
[4]	Operating power on the input shaft	[19]	Radial load, output end
[5]	Operating power on the input shaft	[20]	Axial load, input end
[6]	Operating power on the input shaft	[21]	Axial load, output end
[7]	Output torque of the gear unit	[22]	Manufactured in Brazil
[8]	Output torque of the gear unit	[23]	Weight of the gear unit
[9]	Output torque of the gear unit	[24]	Number of lubrication points
[10]	Input speeds	[25]	Number of installed fans
[11]	Input speeds	[26]	(Empty)
[12]	Input speeds	[27]	Mounting position
[13]	Output speeds	[28]	Lubrication type, oil quantity
[14]	Output speeds	[29]	Year of manufacture
[15]	Output speeds	[39]	Number of special design and note

22766650/EN – 03/2017

2.8 Type designation

The type designation of the planetary gear unit starts with the component on the output side.

Example: The type designation for a planetary gear unit with 3 stages, hollow output shaft with shrink disk, mounted with torque arm and in size 160.

XP3PS160/B	
XP	XP series industrial gear units
3	Number of stages • 1 = 1 stage • 2 = 2 stages • 3 = 3 stages • 4 = 4 stages
P	Gear unit variant • P = Planetary gear unit • K = Bevel-planetary gear unit • F = Helical-planetary gear unit
S	Output shaft (LSS) • S = Solid shaft with key • H = Hollow shaft with shrink disk • C = Square solid shaft
160	Size • 130 to 250
/B	Mounting: • B = Foot • F = Flange • T = Torque arm

22766650/EN – 03/2017

2.9 Type designations of options

Designation	
XP.S.../B	Solid shaft, foot mounting
XP.H.../B	Hollow shaft with shrink disk, foot mounting
XP.C.../B	Square shaft, foot mounting
XP.H.../T	Hollow shaft with shrink disk, torque arm mounting
XP.S.../F	Solid shaft, flange mounting
XP.S.../T	Solid shaft, torque arm mounting
XP.H.../F	Hollow shaft with shrink disk, flange mounting
XP.C.../F	Square shaft, flange mounting

22766650/EN – 03/2017

2.10 Output shaft types

The following table lists the output shaft types.

Type	Hollow shaft with shrink disk	Solid shaft	Square solid shaft
Foot	XP.H.../B 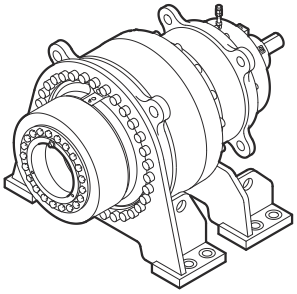	XP.S.../B 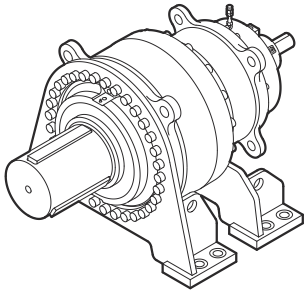	XP.C.../B 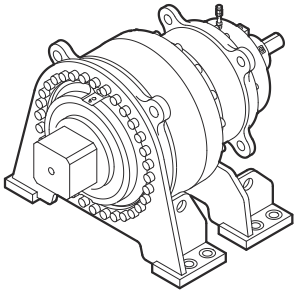
Torque arm	XP.H.../T 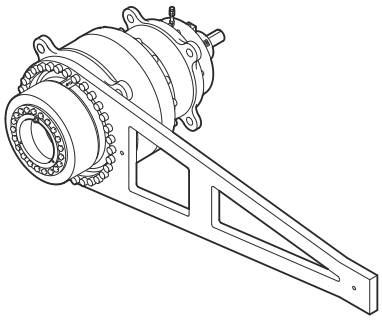	XP.S.../T 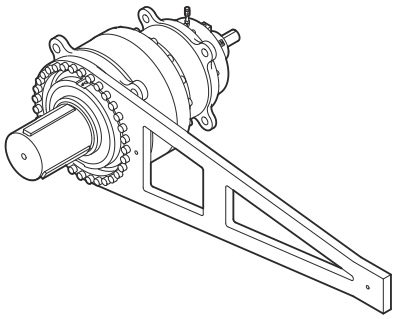	Not available
Flange	XP.H.../F 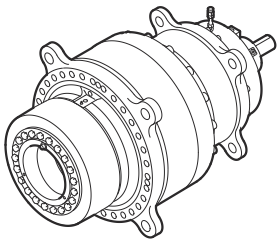	XP.S.../F 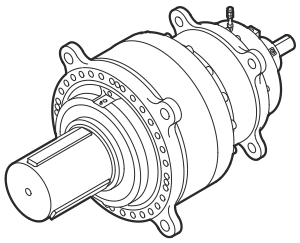	XP.C.../F 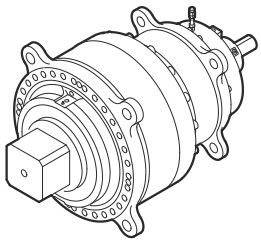

22766650/EN – 03/2017

2.10.1 Components on the input side

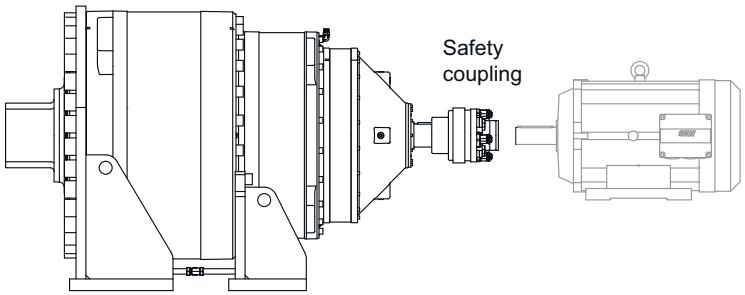

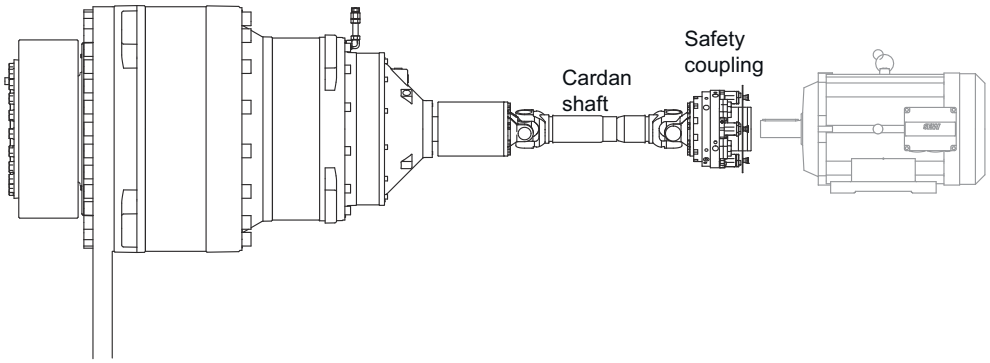

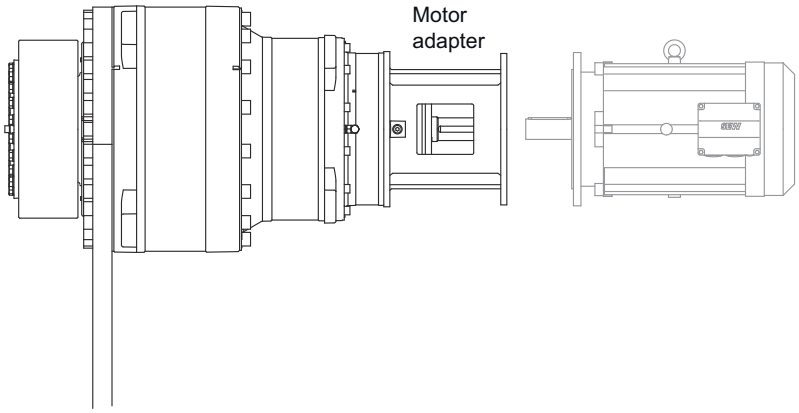

12503556491

22766650/EN – 03/2017

2.10.2 Output shaft variants

The output shaft can have the following standard designs. Other options are available on request.

Hollow shaft with shrink disk
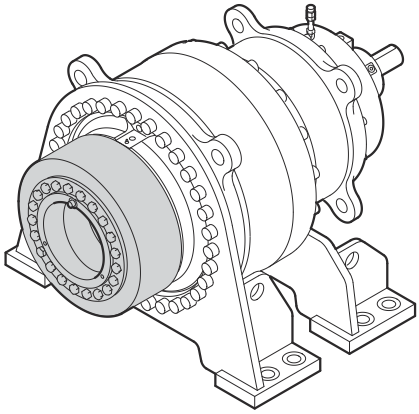

Solid shaft with key
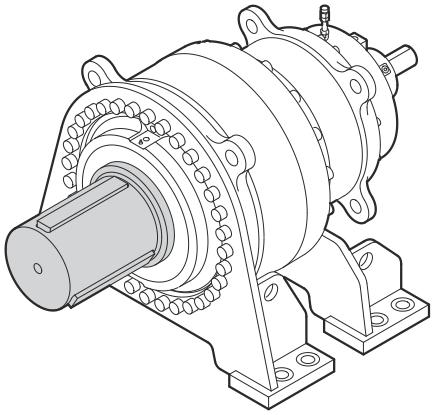

Square shaft
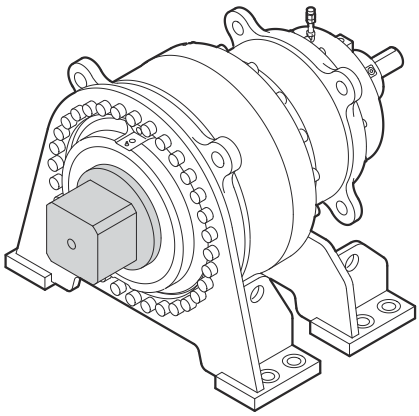

22766650/EN – 03/2017

2.11 Basic designs

2.11.1 XP..P.: Planetary gear unit with coaxial shaft arrangement

The following gear ratios are possible i = 22.4 – 3600

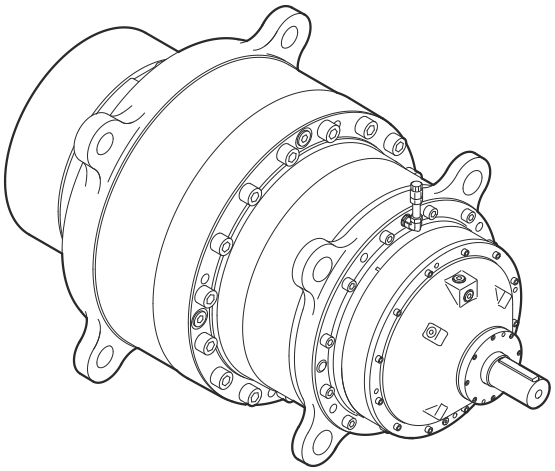

18603745419

2.11.2 XP..F: Helical-planetary gear unit with axially shifted shaft arrangement

The preliminary stage [1] is available in the size XP130 – 250

The following gear ratios are possible i = 45 – 110

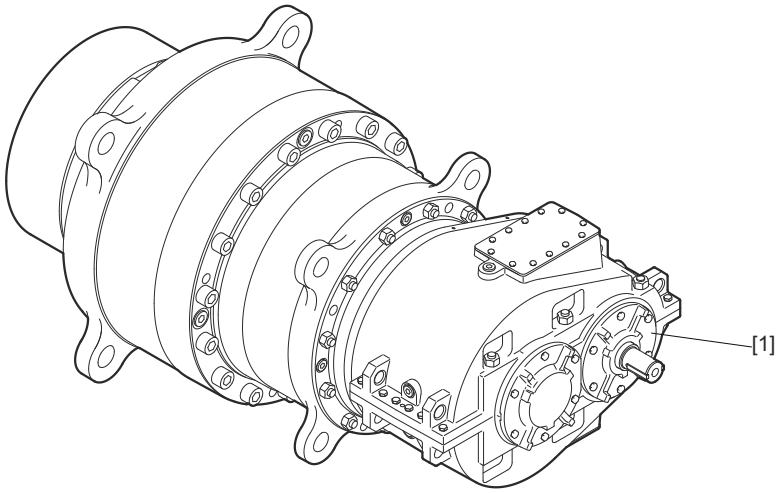

18590773387

22766650/EN – 03/2017

2.11.3 XP..K: Bevel-planetary gear unit with right-angle shaft arrangement

The preliminary stage [1] is available in the size XP130 – 250

The following gear ratios are possible i = 180 – 1000

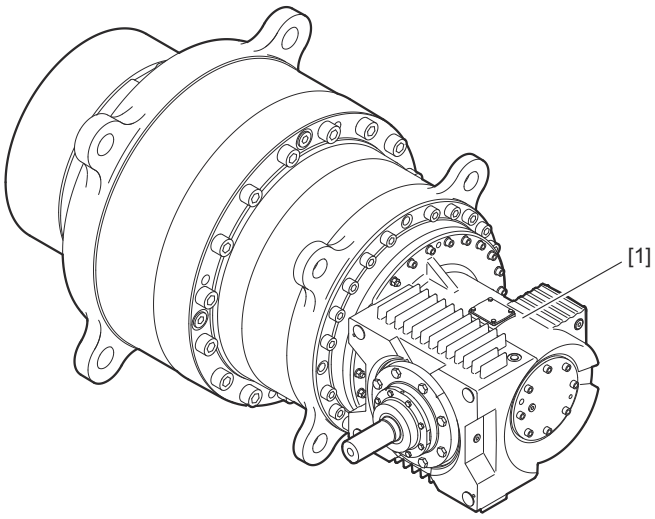

17459405835

22766650/EN – 03/2017

2.12 Coating and surface protection systems

The following table gives an overview of coating and surface protection systems.

SEW design	OS 1 Low environmental pollution	OS 2 Medium environmental pollution	OS 3 High environmental pollution
Use as surface protection with typical environmental conditions Corrosion categories DIN EN ISO 12944-2	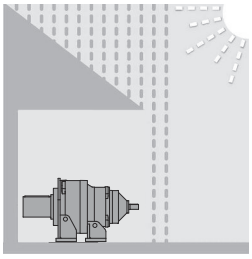 Suited for environments prone to condensation and atmospheres with low humidity or contamination, such as outdoor applications under roof or with protection, unheated buildings where condensation can build up. According to corrosivity category: C2 (low)	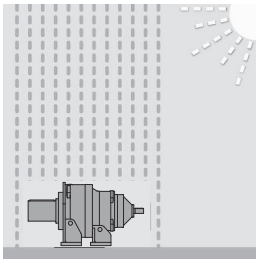 Suited for environments with high humidity or moderate atmospheric contamination, such as applications outdoors subject to direct weathering. According to corrosivity category: C3 (moderate)	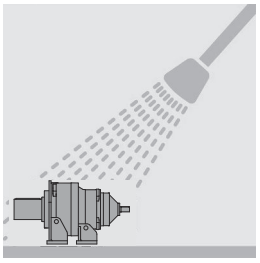 Suitable for environments with high humidity and occasionally severe atmospheric and chemical contamination. Occasionally acidic or caustic wet cleaning. Also for applications in coastal areas with moderate salt load. According to corrosivity category C4 (high)
Sample applications	• Systems in saw mills • Agitators and mixers	• Applications in gravel plants • Cable cars	• Port cranes • Sewage treatment plants • Mining applications
Condensation test ISO 6270	120 h	120 h	240 h
Salt spray test ISO 7253	–	240 h	480 h
Top coat color[1)]	RAL 7031	RAL 7031	RAL 7031
Color according to RAL	Yes	Yes	Yes
Uncoated parts, shaft end/ flanges	Water and hand perspiration repelling anticorrosion agent applied at the factory for external preservation.		

1) Standard color

INFORMATION

Sheet metal parts (e.g. protection covers, fan guard) are painted in RAL 1003.

22766650/EN – 03/2017

2.13 Corrosion and surface protection

2.13.1 General information

SEW-EURODRIVE offers various optional protective measures for operation of motors and gearmotors and industrial gear units under special ambient conditions.

The protective measures comprise two groups:

- Corrosion protection KS for motors
- Surface protection OS for motors and gear units

For motors, optimum protection is offered by a combination of KS corrosion protection and OS surface protection.

2.13.2 KS corrosion protection

KS corrosion protection for motors comprises the following measures:

- All retaining screws that are loosened during operation are made of stainless steel.
- The nameplates are made of stainless steel.
- A top coating is applied to various motor parts.
- The flange contact surfaces and shaft ends are treated with a temporary anticorrosion agent.
- Additional measures for brakemotors.

A sticker labeled "KORROSIONSSCHUTZ" (corrosion protection) on the fan guard indicates special treatment has been applied. Motors with a forced cooling fan and motors with a spread shaft encoder (ES..) cannot be supplied with KS corrosion protection.

22766650/EN – 03/2017

2.14 Storage and transport conditions

The gear units can be provided with the following protection and packaging types depending on the storage and transport conditions.

2.14.1 Internal conservation

Standard corrosion protection

After the test run, the test oil is drained out of the gear unit. The remaining oil film protects the gear unit against corrosion for a limited period of time.

Long-term corrosion protection

After the test run, the test oil is drained out of the gear unit and the interior space is filled with a vapor phase inhibitor. The breather filter is replaced by a screw plug and enclosed with the gear unit.

2.14.2 Exterior corrosion protection

The following measures are taken for exterior corrosion protection:

- Anti-corrosion agent is applied to bare, non-painted functional surfaces of shafts, flanges, mounting and foot surfaces of the housing. Remove it only using an appropriate solvent which is not harmful to the oil seal.
- Small spare parts and loose pieces, such as bolts, nuts, etc., are packed in corrosion protection plastic bags (VCI corrosion protection bags).
- Threaded holes and blind holes are covered by plastic plugs.



INFORMATION

- If the gear unit is stored longer than 6 months, regularly check the protective coating of unpainted areas as well as the paint coating. Areas in which the protective coating and/or painting has been damaged may have to be repainted.

2.14.3 Packaging

Standard packaging

The gear unit is delivered on a pallet, securely attached and without cover.

Use: Transportation by land

Long-term packaging

The gear unit is delivered in a wooden box that is also appropriate for sea transport.

Application: Sea transport and/or for extended storage

22766650/EN – 03/2017

2.14.4 Storage conditions

INFORMATION

- During storage up to startup, the gear unit must be stored in a shock-free manner to prevent damage to the rolling bearing races.
- The output shaft must be rotated at least one full revolution every 6 months so that the position of the rolling elements in the bearings of the input and output shafts changes.
- The gear units are delivered without oil; different protection systems are required depending on the storage period and storage conditions as shown in the table below.

Corrosion protection + packaging	Storage location	Storage duration
Standard corrosion protection + Standard packaging	Under roof and enclosed at constant temperature and atmospheric humidity (5 °C < ϑ < 60 °C, < 50% relative humidity). No sudden temperature fluctuations. Controlled ventilation with filter (free from dust and dirt). No aggressive vapors, no shocks.	Max. 6 months with intact surface protection.
Long-term corrosion protection + Standard packaging	Under roof and enclosed at constant temperature and atmospheric humidity (5 °C < ϑ < 60 °C, < 50% relative humidity). No sudden temperature fluctuations. Controlled ventilation with filter (free from dust and dirt). No aggressive vapors, no shocks.	Max. 3 years with regular inspection and checking for intactness.
Long-term corrosion protection + Long-term packaging	With roof, protected against rain and shocks.	Max. 3 years with regular inspection and checking for intactness.

INFORMATION

If stored in tropical zones, provide for sufficient protection against insect damage. Contact SEW-EURODRIVE for differing requirements.

22766650/EN – 03/2017

2.15 Lubrication type

The lubrication type depends on the mounting position of the gear unit.

In horizontal mounting position M1, the gear unit is half filled with oil. Gearing and bearing parts that are not immersed in the oil bath are lubricated by splashing oil.

2.16 Checking the oil level/filling oil

The oil is filled into the gear unit via the riser pipe [2]. As an alternative, the oil can be filled in via the gear unit opening [3].

The oil level is check via the oil sight glass [1].

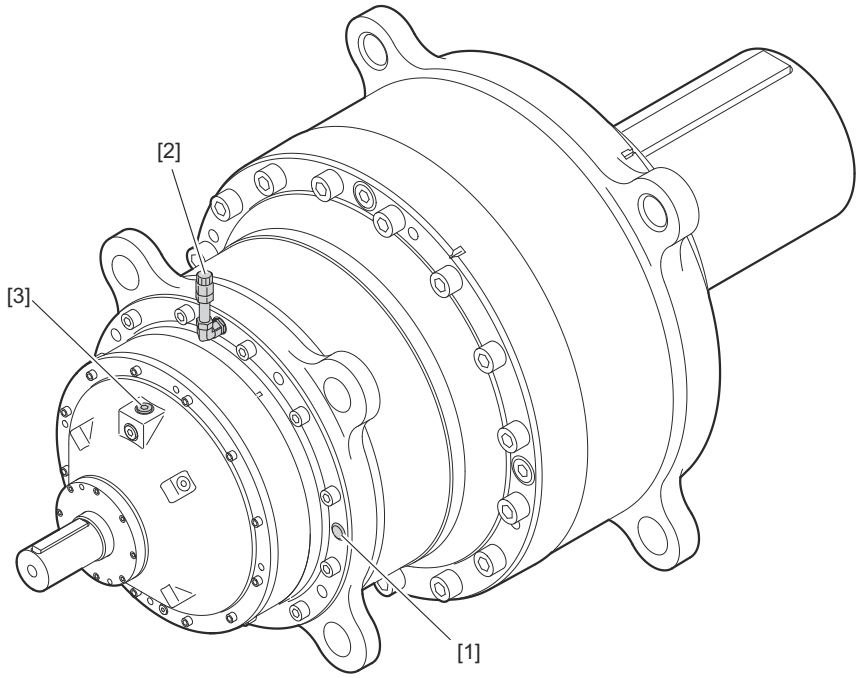

12512383115

22766650/EN – 03/2017

2.17 Overview of sealing systems

Input shaft

Standard	Radial labyrinth seal (Taconite), re-greasable
Two oil seals [1] with dust protection lip on bearing race	Single oil seal [1] on bearing race with radial labyrinth seal
Normal environment	Very dusty environments with abrasive particles
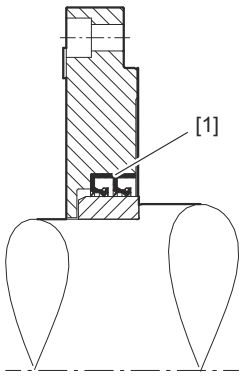	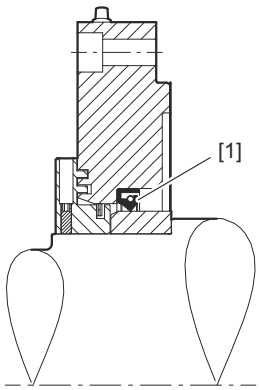

Output shaft

Standard	Radial labyrinth seal (Taconite), re-greasable
Two oil seals [1] with dust protection lip on bearing race	Single oil seal [1] on bearing race with radial labyrinth seal
Normal environment	Very dusty environments with abrasive particles
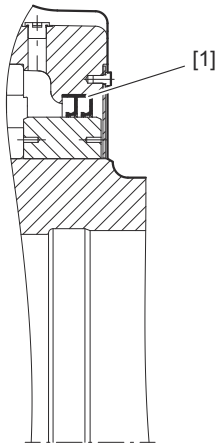	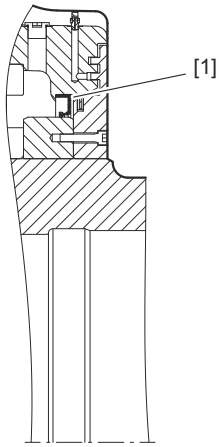

22766650/EN – 03/2017

3 Options

3.1 Torque arm

The torque arm can be mounted according to customer requirements.

The retaining screws are included in the delivery.

The position of the torque arm is determined as looking onto the output shaft (mounting position 0°, 90°, 180°, 270°).

INFORMATION

Different mounting positions are possible depending on the angle division (number of retaining screws).

The following figure shows a sample mounting position and combination of a planetary gear unit and a torque arm.

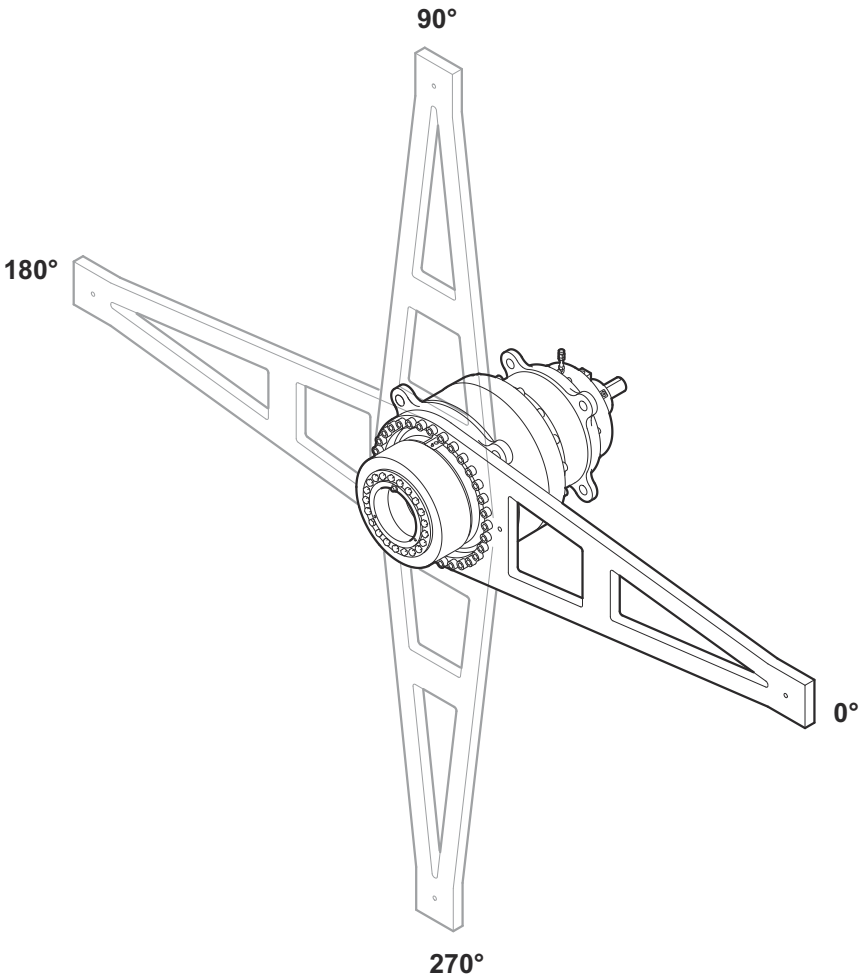

12836096267

22766650/EN – 03/2017

3.2 Backstop

The backstop is installed in the input cover [1]. The purpose of it is to prevent undesirable reverse rotation. During operation, the backstop permits rotation in only one specified direction of rotation.

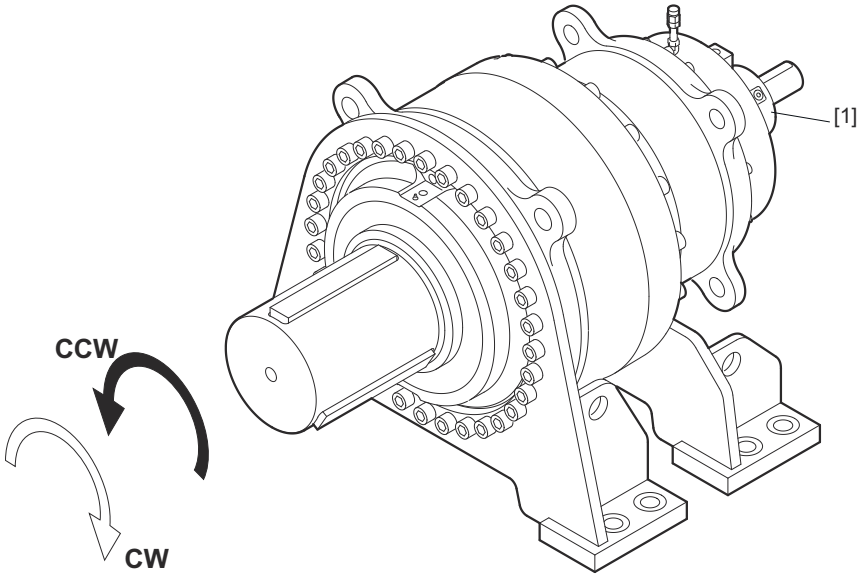

12528941835

CW Rotation in clockwise direction
CCW Rotation in counterclockwise direction

4 Project planning for gear units

4.1 Selecting the application factors

4.1.1 Service factor F_S

Area of application	Application type (Driven machine)	Application-specific service factor FS min Operating period/day		
		< 3 h	3-10 h	> 10 h
Sugar factory	Disintegrators	-	-	2.00
	Conveyor belt	1.15	1.30	1.50
	Crystallizers	-	1.50	1.80
	45° table	-	1.40	1.50
	Shredder	-	-	2.00
	Chippers	-	-	2.00
Waste water treatment	Aerator wheel	-	1.80	2.00
	Thickeners	1.15	1.25	1.50
	Vacuum filters	1.15	1.30	1.50
	Collector	1.15	1.25	1.50
	Screw pump	-	1.30	1.50
	Brush aerators	-	-	2.00
Mining	Shredders	2.30	2.70	3.00
	Screens and shakers	1.55	1.75	2.00
	Slewing drives	-	1.55	1.80
	Bucket-wheel excavator	1)	1)	1)
Energy industry	Frequency inverters	-	1.80	2.00
	Water wheels (low speed)	-	-	1.70
	Water turbines	-	-	1)
Conveyor belts	Bucket elevator	-	1.40	1.50
	Other vertical conveyors	-	1.50	1.80
	Belt conveyors ≤ 100 kW	1.15	1.25	1.40
	Belt conveyors > 100 kW	1.15	1.30	1.50
	Apron feeders	-	1.25	1.50
	Screw feeder	1.15	1.25	1.50
	Shaking devices Screens	1.55	1.75	2.00
	Elevators	1.25	1.25	1.50
	Passenger elevators	1)	1)	1)
Rubber and plastic industry	Extruders (plastic)	-	1.40	1.60
	Extruders (rubber)	-	1.50	1.80
	Rubber rollers (2 in a row)	1.55	1.75	2.00
	Rubber rollers (3 in a row)	-	1.50	1.75
	Heatable rollers	1.35	1.50	1.75
	Calender	-	1.65	1.65
	Rollers	1.55	1.75	2.00
	Mixing rollers	1)	1)	1)
	Slab rollers	1.55	1.75	2.00
	Refiners	1.55	1.75	2.00
	Tire machines	1)	1)	1)
Timber industry	Timber industry	1)	1)	1)
Cranes	Cranes and hoists	2)	2)	2)
Food industry	Shredders and rollers	-	-	1.75
	Beet slicers	-	1.25	1.50
	Drying drums	-	1.25	1.50

22766650/EN – 03/2017

Area of application	Application type (Driven machine)	Application-specific service factor FS min Operating period/day		
		< 3 h	3-10 h	> 10 h
Metal production and processing	Winders	-	1.60	1.75
	Slitting rollers	1.55	1.75	2.00
	Circular conveyors Single drives	1)	1)	1)
	Circular conveyors Group drives	1)	1)	1)
	Circular conveyors with lifting cylinder	1)	1)	1)
	Wire drawing machines	1.35	1.50	1.75
	Rollers	1)	1)	1)
Mills and drums	Cooling and drying drums	-	1.50	1.60
	Rotary kilns	-	-	2.00
	Ball mills	-	-	2.00
	Coal mills	-	1.50	1.75
Pulp and paper industry	Debarking drums and barkers	1.55	1.80	-
	Rolls (pick-up roll, wire drive roll, wire suction roll)	-	1.80	2.00
	Drying cylinders (rolling bearings)	-	1.80	2.00
	Calenders (rolling bearings)	-	1.80	2.00
	Filters (pressure and vacuum)	-	1.80	2.00
	Beaters and shredders	1.55	1.75	2.00
	Jordan refiners	-	1.50	1.75
	Presses (bark, Paper machine felt, Adhesive, Suction)	-	-	1.75
	Roles	-	-	1.75
	Kneading machine	1)	1)	1)
	Washer filters	-	-	1.50
	Yankee cylinders (dryers)	1)	1)	1)
Pumps	Centrifugal pumps	1.15	1.35	1.45
	Reciprocating pumps (single-cylinder)	1.35	1.50	1.80
	Reciprocating pumps (multi-cylinder)	1.20	1.40	1.50
	Screw pumps	-	1.25	1.50
	Rotary pumps (gear unit. Vane)	-	-	1.25
Agitators and mixers	Agitators for liquids	1.00	1.25	1.50
	Agitators for liquids (variable density)	1.20	1.50	1.65
	Agitators for solids (inhomogeneous material)	1.40	1.60	1.70
	Agitators for solids (homogeneous material)	-	1.35	1.40
	Concrete mixers	-	1.50	1.50
Cableways	Material cableway	-	1.40	1.50
	Aerial cableways		1)	1)
	Surface lifts	1)	1)	1)
	Continuous aerial cableways	1)	1)	1)
	Funicular railways	1)	1)	1)
Fan	Heat exchangers	1.50	1.50	1.50
	Dry cooling towers	-	-	2.00
	Wet cooling towers	2.00	2.00	2.00
	Blowers (axial and radial)	1.50	1.50	1.50
Compressors	Reciprocating compressors	-	1.80	1.90
	Radial compressors	-	1.40	1.50
	Screw-type compressors	-	1.50	1.75

1) Contact SEW-EURODRIVE.

2) Contact SEW-EURODRIVE. Dimensioning according to FEM1001.

22766650/EN – 03/2017

4.1.2 Peak load factor

The peak load factor F_F takes account of the overload capacity of the gearing and the torque-transmitting parts.

Peak load frequency per hour					
1 to 5	6 to 20	21 to 40	41 to 80	81 to 160	> 160
1.0	1.2	1.3	1.5	1.75	2.0

4.1.3 Startup factor – F_{start}

The startup factor F_{start} takes account of the overload caused by startup.

The following startup factors are guide values. The actual values depend on the application.

Startup mode	Startup factor – F_{start}
Direct	3.0
Soft start	1.8
Frequency inverter	1.5 to 2.0[1)]
Star/delta	1.3
Hydraulic coupling without delay chamber	2.0
Hydraulic coupling with delay chamber	1.6

1) Depending on settings

4.2 Calculating the basic data

4.2.1 Checking the input speeds

$n_{1per} > n_{1max}$

n_{1per} = Permitted input speed in min^{-1}
n_{1max} = Maximum input speed in min^{-1}

If the permitted input speed is exceeded, contact SEW-EURODRIVE.

Planetary gear unit:

n_{1per} (XP4P.) = 1800 min^{-1}

n_{1per} (XP3P.) = 1800 min^{-1}

n_{1per} (XP2P.) = 1200 min^{-1}

Helical-planetary gear unit:

n_{1per} (XP3F.) = 1200 min^{-1}

Bevel-planetary gear unit:

n_{1per} (XP4K.) = 1800 min^{-1}

4.2.2 Checking the output speeds

$n_{2per} > n_{2max}$

$n_{2per} = 10\ min^{-1} \geq n_{2max}$

n_{2per} = Permitted output speed in min^{-1}
n_{2max} = Maximum output speed in min^{-1}

If the permitted output speed is exceeded, contact SEW-EURODRIVE.

22766650/EN – 03/2017

4.2.3 Calculation of ratio

$$I_{ex} = \frac{n_1}{n_2}$$

n_1 = Input speed at HSS in min^{-1}
n_2 = Output speed at LSS in min^{-1}

4.2.4 Determination of operating torque of driven machine

$$M_{K2} = 9{,}55 \times \frac{P_{K2}}{n_2}$$

M_{K2} = Operating torque at LSS in kNm
P_{K2} = Operating power at LSS in kW
n_2 = Output speed at LSS in min^{-1}

4.3 Selecting the nominal motor power

$$P_M \geq P_{K1} = \frac{P_{K2}}{\eta}$$

P_M = Nominal motor power in kW
P_{K1} = Operating power on HSS in kW
P_{K2} = Operating power at LSS in kW
η = Efficiency (0.975 for 3-stage XP planetary gear unit)

Efficiency:

XP2P. = 0.985

XP3P. = 0.975

XP4P. = 0.965

XP3F. = 0.97

XP4K. = 0.96

22766650/EN – 03/2017

4.4 Calculating the required nominal gear unit torque – M_{N2}

Constant load direction – constant torque:

$$M_{N2} \geq M_{K2} \times F_{S\ min}$$

M_{N2} = Nominal torque of the gear unit in kNm
M_{K2} = Operating torque at LSS in kNm
$F_{S\ min}$ = Application-specific service factor

Reversing load direction – constant torque:

$$M_{N2} \geq M_{K2} \times F_{S\ min} \times 1.43$$

M_{N2} = Nominal torque of the gear unit in kNm
M_{K2} = Operating torque at LSS in kNm
$F_{S\ min}$ = Application-specific service factor

Selecting the size:

Size	M_{N2} in kNm
XP130	600
XP140	730
XP150	900
XP160	1100
XP170	1350
XP180	1600
XP190	1900
XP200	2300
XP210	2850
XP220	3300
XP230	4000
XP240	4600
XP250	5200

22766650/EN – 03/2017

4.5 Checking the peak load states $M_{K2\ per}$ $M_{K2\ max}$

Permitted peak output torque $M_{K2\ per}$:

Constant load direction

$$M_{K2\ per} = \frac{2 \times M_{N2}}{F_F}$$

$M_{K2\ per}$ = Permitted peak output torque kNm
M_{N2} = Nominal torque of the gear unit kNm
F_F = Peak load factor

Calculating the peak output torque $M_{K2\ max}$

$$M_{K2\ max} = \frac{P_M \times 9{,}55 \times \eta}{n_2} \times F_{start}$$

$M_{K2\ max}$ = Peak output torque kNm
F_{Start} = Startup factor
P_M = Nominal motor power kW
η = Efficiency (0.975 for 3-stage XP planetary gear unit)

Checking the gear unit selection:

$$M_{K2\ max} \leq M_{K2\ per}$$

$M_{K2\ max}$ = Peak output torque kNm
$M_{K2\ per}$ = Permitted peak output torque kNm

22766650/EN – 03/2017

4.6 Checking the bearing service life $L_{h10} \geq L_{h10\ required}$

INFORMATION

The bearing service life check only applies for 3-stage XP3P. planetary gear units. For the bearing service life for other gear unit designs, contact SEW-EURODRIVE.

$$L_{h10} = \left[\frac{M_{N2}}{M_{K2}}\right]^{3.33} \times \frac{5000 \times n_{2B}}{n_2} \geq L_{h10\ required}$$

L_{h10} = Bearing service life in hours
$L_{h10\ required}$ = Required bearing service life in hours
M_{N2} = Nominal torque of the gear unit in kNm
M_{K2} = Operating torque at LSS in kNm
n_2 = Output speed at LSS
n_{2B} = Reference output speed in min^{-1}, see following table

Size	Reference output speed n_{2B} in min^{-1}
XP130	9.9
XP140	13.8
XP150	11.4
XP160	10.4
XP170	9.9
XP180	13.2
XP190	13.8
XP200	10.0
XP210	11.0
XP220	14.0
XP230	10.1
XP240	9.1
XP250	16.2

22766650/EN – 03/2017

4.7 Radial and axial forces

4.7.1 Influences and dependencies:

The permitted additional forces depend on the following factors:

- Existing service factor of the gear unit with respect to the selection data
- Required bearing service life
- Direction of the axial force (from or towards gear unit)
- Application angle of the radial load (rotating or at a specific position)
- Point of force application
- Ratio between radial and axial load
- Gear unit mounting

4.7.2 Determining the overhung load

If no overhung loads are specified, they can be determined by approximation as follows. When determining the resulting overhung load, the type of transmission element mounted on the shaft end must be considered. The following transmission element factors f_Z must be considered for various transmission elements.

Transmission element	Transmission element factor f_Z	Comments
Gears	1.15	< 17 teeth
Sprockets	1.40	< 13 teeth
Sprockets	1.25	< 20 teeth
Narrow V-belt pulleys	1.75	Influence of pre-tensioning
Flat belt pulleys	2.50	Influence of pre-tensioning
Toothed belt pulleys	1.50	Influence of pre-tensioning

The overhung load exerted on the motor or gear shaft is calculated as follows:

$$F_R = \frac{M_d \times 2000}{d_0} \times f_z N$$

F_R = Overhung load in N
M_d = Torque in Nm
d_0 = Mean diameter of the installed transmission element in mm
f_Z = Transmission element factor

4.7.3 Permitted overhung load

The basis for determining the permitted overhung loads in the roller bearing calculation is the nominal bearing service life L_{10h} (according to ISO 281).

For special operating conditions, the permitted overhung loads can be determined on the basis of the modified service life L_{nmh} on request.

For applications with defined service life, the permitted overhung loads have been calculated based on an adapted shaft safety. The values can therefore be reduced.

4.7.4 Overhung load on output

The permitted overhung loads $F_{R\,per}$ for solid shaft gear units can be calculated exactly. The force values relate to the force application in the center of the shaft end for solid shafts and to the gear unit flange contact point for hollow shafts. In planetary gear units, the force application angle and direction of rotation do not influence the permitted values as there are no inner forces from the gear unit acting on the output bearing.

22766650/EN – 03/2017

4.7.5 Permitted overhung loads and axial loads on the input

If overhung and axial loads apply on the input shaft, contact SEW-EURODRIVE.

Checking the permitted radial load on the output shaft

Use the following table to check if the required overhung load F_R in the center of the shaft end is permitted. The load is permitted if:

$F_{R\ permitted} \geq F_R$

The values apply to force application to the middle of the shaft end L/2

and the output speed of $n_2 = 10\ min^{-1}$.

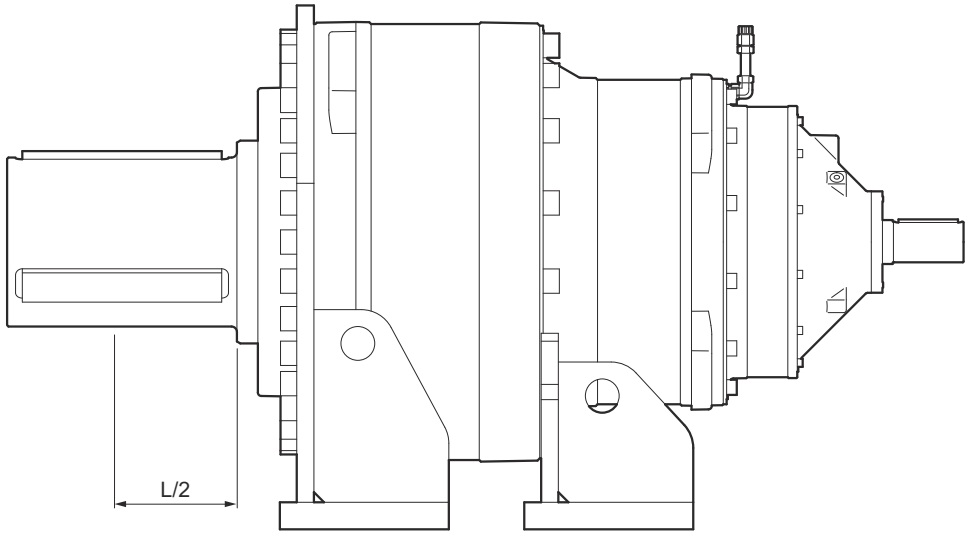

12673075211

Size	XP130	XP140	XP150	XP160	XP170	XP180	XP190 to XP250
$F_{R\ permitted}$ in N	520000	61500	725000	850000	1000000	1150000	On request

22766650/EN – 03/2017

4.8 Checking the thermal rating P_T

INFORMATION

The bearing service life check only applies for 3-stage XP3P. planetary gear units. For the thermal rating for other gear unit designs, contact SEW-EURODRIVE.

The thermal rating P_T of a gear unit is the power that the gear unit can transmit constantly without exceeding a defined oil temperature. Thermal rating depends on the following factors:

- Ambient temperature
- Air circulation and sunlight exposure at the installation site
- Installation altitude
- Heat conduction to foundation at installation site
- Gear unit type, size and gear ratio
- External cooling of the gear unit
- Lubrication of the gear unit
- Lubricant type
- Cyclic duration factor

For the following ambient conditions, the thermal rating can be directly read from the selection tables "Thermal rating for XP3P.." (→ 🗎 60):

- Installation in a large hall (air velocity 1.4 m/s)
- Natural cooling
  - Ambient temperature 30 °C
  - Steel foundation
  - Installation altitudes up to 1000 m above sea level
  - Horizontal mounting position (M1)
  - Input speed: 750 – 1800 min^{-1}
  - Service factor $F_{S\,min} \leq 2.0$

INFORMATION

For outdoor installations, ensure that there is sufficient protection against sunlight. Contact SEW-EURODRIVE if you have deviating ambient conditions.

$$P_T = P_{TH} \times f_1 \times f_T$$

P_T = Thermal rating of the gear unit in kW
P_{TH} = Nominal thermal rating of the gear unit in kW
f_T = Temperature factor
f_1 = Altitude factor

Altitude factor f_1

Height	Height, meters about sea level				
Factor f_1	Up to 1000	1000 – 2000	2000 – 3000	3000 – 4000	4000 – 5000
	1.00	0.95	0.91	0.87	0.83

22766650/EN – 03/2017

Temperature factor f_T

Ambient temperature °C				
10	**20**	**30**	**40**	**50**
1.9	1.35	1.00	0.8	0.45

The gear unit's thermal rating must be at least as large as the operating power on the input shaft HSS.

$$P_T \geq P_{K1}$$

P_T = Nominal thermal rating of the gear unit in kW

P_{K1} = Operating power on HSS in kW

INFORMATION

If the thermal rating P_T is smaller than the operating power, use an external cooling system. The required cooling capacity must be determined depending on the operating power P_{K1}, see chapter "Required cooling capacity" (→ 🗎 61).

22766650/EN – 03/2017

4.9 Calculation example

XP3P. planetary gear unit

Drive machine: Motor with soft starter (10 starts per hour)

Motor power: P_1 = 2000 kW

Motor speed: n_1 = 1200 min^{-1}

Operating power at HSS: P_{K1} = 1423 kW

Driven machine: Disintegrators

P_{K2} = 1380 kW

$F_{s\ min}$ = 2.00 (see chapter "Service factor" (→ 🗎 32))

Output speed: n_2 = 6 min^{-1}

Required bearing service life $L_{h10\ required}$ = 50000 hours

Ambient condition:

- Ambient temperature: 20 °C
- Installation altitude: 800 m
- Installation location: Large rooms and halls

4.9.1 Checking the input speeds

n_{1max} = 1200 min^{-1}

$n_{1per} > n_{1max}$

1800 min^{-1} > 1200 min^{-1}

→ Maximum input speed permitted

n_{1per} = Permitted input speed in min^{-1}
n_{1max} = Maximum input speed in min^{-1}

4.9.2 Checking the output speeds

$n_{2per} > n_{2max}$

10 min^{-1} > 6 min^{-1}

→ Maximum output speed permitted

n_{2per} = Permitted output speed in min^{-1}
n_{2max} = Maximum output speed in min^{-1}

4.9.3 Calculation of ratio

$$i_{ex} = \frac{n_1}{n_2} \qquad i_{ex} = \frac{1200}{6} \qquad i_{ex} = 200$$

22766650/EN – 03/2017

4.9.4 Determination of operating torque of driven machine

$$M_{K2} = \frac{P_{K2} \times 9.55}{n_2} = \frac{1380\ \text{kW} \times 9.55}{6\ \text{min}^{-1}} = 2196.5\ \text{kNm}$$

M_{K2} = Operating torque at LSS in kNm
P_{K2} = Operating power at LSS in kW
n_2 = Output speed at LSS in min^{-1}

4.9.5 Determination of required nominal gear unit torque

$$M_{N2} \geq M_{K2} \times F_{S\,min} = 2196.5\ \text{kNm} \times 2 = 4393\ \text{kNm}$$

M_{N2} = Nominal torque in kNm
M_{K2} = Operating torque at LSS in kNm
$F_{S\,min}$ = Application-specific service factor

Selected gear unit:

- XP240
- Gear ratio 205.7, see chapter "Gear ratio" (→ 🗎 57)
- Nominal torque of the gear unit 4600 kNm, see data sheet "Sizes and torque ratings" (→ 🗎 14).

4.9.6 Selecting the nominal motor power

$$P_M \geq P_{K1} = \frac{P_{K2}}{\eta} = \frac{1380\ \text{kW}}{0.975} = 1415.4\ \text{kW}$$

P_M = Nominal motor power in kW
P_{K1} = Operating power on HSS in kW
P_{K2} = Operating power at LSS in kW
η = Efficiency (0.975 for 3-stage XP planetary gear unit)

→ Selected motor with P_M = 2000 kW is permitted.

22766650/EN – 03/2017

4.9.7 Checking the peak load states $M_{K2\ per} > M_{K2\ max}$

Permitted peak output torque $M_{K2\ per}$

$$M_{K2\ per} = \frac{2 \times M_{N2}}{F_F} = \frac{2 \times 4600\ \text{kNm}}{1.2} = 7667\ \text{kNm}$$

$M_{K2\ per}$ = Permitted peak output torque in kNm
M_{N2} = Nominal torque of the gear unit in kNm
F_F = Peak load factor

Calculating the output torque $M_{K2\ max}$

$$M_{K2\ max} = \frac{P_M \times 9.55 \times \eta}{n_2} \times F_{start} = \frac{2000\ \text{kW} \times 9.55 \times 0.975}{6\ \text{rpm}} = 5\,886.8\ \text{kNm}$$

$M_{K2\ max}$ = Peak output torque in kNm
F_{Start} = Startup factor
P_M = Nominal motor power in kW
η = Efficiency (0.975 for 3-stage XP planetary gear unit)

$M_{K2\ per} > M_{K2\ max} \rightarrow$ Selected gear unit size permitted

4.9.8 Calculating the bearing service life

INFORMATION

The bearing service life check only applies for 3-stage XP3P. planetary gear units.

$$L_{h10} = \left[\frac{M_{N2}}{M_{K2}}\right]^{3.33} \times \frac{5000 \times n_{2B}}{n_2} = \left[\frac{4393\ \text{kNm}}{2196.5\ \text{kNm}}\right]^{3.33} \times \frac{5000 \times 9.1\ \text{min}^{-1}}{6\ \text{min}^{-1}} = 76418\ \textit{hours}$$

$L_{h10} > L_{h10\ required}$

76418 hours > 50000 hours → Bearing service life fulfilled

L_{h10} = Bearing service life in hours
$L_{h10\ required}$ = Required bearing service life in hours
M_{N2} = Nominal torque of the gear unit in kNm
M_{K2} = Operating torque at LSS in kNm
n_2 = Output speed at LSS in min^{-1}
n_{2B} = Reference output speed in min^{-1}, see following table

Size	Reference output speed n_{2B}
XP130	9.9
XP140	13.8
XP150	11.4
XP160	10.4
XP170	9.9
XP180	13.2
XP190	13.8
XP200	10.0
XP210	11.0
XP220	14.0
XP230	10.1
XP240	9.1
XP250	16.2

22766650/EN – 03/2017

4.9.9 Checking the thermal rating

$P_T \geq P_{TH} \times f_1 \times f_T = 1245\ kW \times 1.00 \times 1.35 = 1680\ kW$

P_{TH} = 1245 kW see table chapter "Thermal rating" (→ 🗎 60).

f_1 = 1.00 see installation altitude of 800 m in chapter "Checking the thermal rating" (→ 🗎 41).

f_T = 1.35 see ambient temperature for splash lubrication without additional cooling in chapter "Checking the thermal rating" (→ 🗎 41).

The operating power P_{K1} must not exceed the thermal rating P_T ($P_{K1} \leq P_T$). Additional cooling is required if $P_{K1} > P_T$

1680 kW > 1415.4 kW

The thermal rating is sufficient at 20 °C. No additional cooling is required.

22766650/EN – 03/2017

5 Permitted lubricants

This chapter describes the permitted lubricants and the permitted temperatures for industrial gear units from SEW-EURODRIVE.

INFORMATION

- The standard for viscosity and oil grade is the type of oil that is specified by SEW-EURODRIVE in the order (see order confirmation and nameplate).
- Contact SEW-EURODRIVE if you use bio and food grade lubricants or polyglycol oils.
- Check the compatibility of the greases and oils used.
- The tables contain the lubricants approved by SEW-EURODRIVE.
- Oils of the same viscosity class from different manufacturers do not have the same characteristics. In particular, the minimum permitted oil bath temperatures are manufacturer-specific. These temperatures are specified in the lubricant tables.
- The minimum permitted oil bath temperatures depend on the lubrication type used. These temperatures are specified in the lubricant tables. The values correspond to the maximum viscosity of the individual lubricants.
- The values specified in the lubricant tables apply as of the time of printing of this document. The data of the lubricants are subject to dynamic change on the part of the lubricant manufacturers. For the latest information about the lubricants, visit: www.sew-eurodrive.de/lubricants

5.1 Guidelines for lubricant selection

SEW-EURODRIVE delivers the planetary gear units without oil.

INFORMATION

- The oil viscosity and type (mineral/synthetic) that are to be used are determined by SEW-EURODRIVE specifically for each order. This information is noted in the order confirmation and on the gear unit's nameplate. You must contact SEW-EURODRIVE in case of a deviation from this specification. This lubricant recommendation in chapter "Lubricant table" in no way represents a guarantee as to the quality of the lubricant delivered by each respective supplier. Each lubricant manufacturer is responsible for the quality of its product.
- Ensure that the planetary gear units are filled with the correct oil grade and volume before startup. You can obtain the corresponding information from the gear unit nameplate and the lubricant table on the following pages.
- Do not mix different synthetic lubricants and do not mix synthetic with mineral lubricants.
- Check the compatibility of the used greases and oils.

22766650/EN – 03/2017

5.2 Structure of the tables and abbreviations

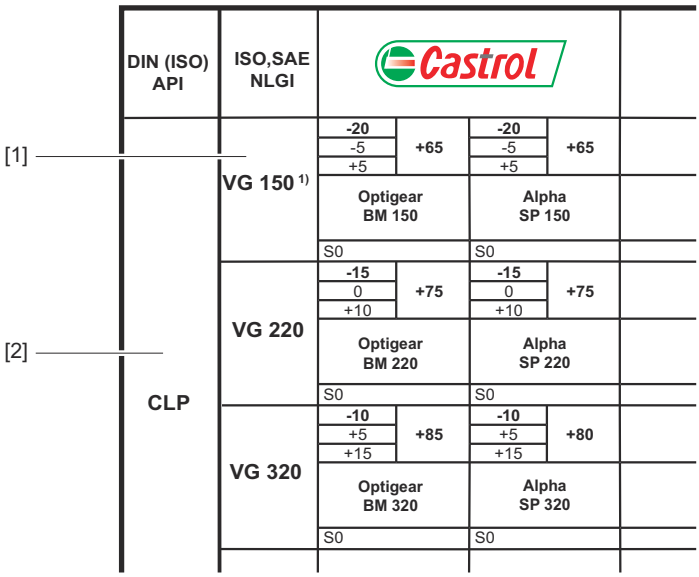

9007217174587531

[1] Viscosity class
[2] Lubricant type

Abbreviations

Icons	Designation
CLP	= Mineral oil
CLP HC	= Synthetic polyalphaolefin (PAO)
E	= Ester-based oil
	= Mineral lubricant
	= Synthetic lubricant
	= Lubricant for the food industry (**NSF H1**-compliant)
	= Biodegradable oil (lubricant for agriculture, forestry, and water management)
1)	= Lubricants may only be used if service factor $F_s \geq 1.3$

22766650/EN – 03/2017

5.3 Explanation of the various lubricants

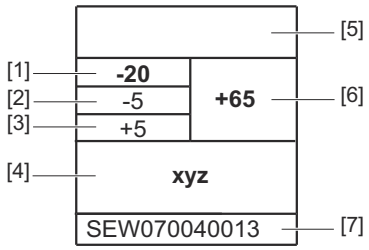

18014416413363467

[1] Lowest cold start temperature in °C for splash lubrication*
[2] Lowest cold start temperature in °C for drives with pumps up to a max. oil viscosity of 5000 cSt*
[3] Lowest cold start temperature in °C for drives with pumps up to a max. oil viscosity of 2000 cSt*
[4] Trade name
[5] Manufacturer
[6] Highest oil bath temperature in °C. MUST NOT BE EXCEEDED.
[7] Approvals

*In case of low temperatures, the oil must be heated to the specified minimum temperature, for example by using an oil heater. The maximally permitted oil viscosity per pump type is specified in the following chapter.

22766650/EN – 03/2017

5.4 Lubricant tables

The lubricant table is valid when this document is printed. Please refer to www.sew-eurodrive.de/lubricants for the latest version of the table.

DIN (ISO) API	ISO,SAE NLGI	Castrol	FUCHS	Mobil®	KLÜBER LUBRICATION	Shell	TEXACO	TOTAL
CLP	VG 150 [1]	-20 -5 +5 / +65 / Optigear BM 150	-20 -5 +5 / +65 / Renolin CLP 150 Plus	-20 -5 +5 / +65 / Mobilgear 600 XP 150	-20 -5 +5 / +65 / Klüberoil GEM 1-150 N		-20 -5 +5 / +65 / Meropa 150	
	VG 220	S0 / -15 0 +10 / +75 / Optigear BM 220	S0 / -15 0 +10 / +75 / Renolin CLP 220 Plus	SEW070030013 / -15 0 +10 / +75 / Mobilgear 600 XP 220	S0 / -10 +5 +15 / +80 / Klüberoil GEM 1-220 N	S0 / -10 +5 +15 / +80 / Shell Omala Oil F 220	S0 / -10 +5 +15 / +80 / Meropa 220	S0 / -15 0 +10 / +75 / Carter EP 220
	VG 320	S0 / -10 +5 +15 / +85 / Optigear BM 320	S0 / -10 +5 +15 / +80 / Renolin CLP 320 Plus	SEW070030013 / -10 +5 +15 / +80 / Mobilgear 600 XP 320	S0 / -10 +5 +15 / +80 / Klüberoil GEM 1-320 N	S0 / -10 +5 +15 / +80 / Shell Omala Oil F 320	S0 / -10 +5 +15 / +80 / Meropa 320	S0 / -10 +5 +15 / +80 / Carter EP 320
	VG 460	S0 / -5 +10 +20 / +90 / Optigear BM 460	S0 / -5 +10 +20 / +90 / Renolin CLP 460 Plus	SEW070030013 / -5 +10 +20 / +90 / Mobilgear 600 XP 460	S0 / -5 +10 +20 / +90 / Klüberoil GEM 1-460 N	S0 / -5 +10 +20 / +90 / Shell Omala Oil F 460	S0 / -5 +10 +20 / +90 / Meropa 460	S0 / -5 +10 +20 / +90 / Carter EP 460
	VG 680	S0 / 0 +15 +25 / +90 / Optigear BM 680	S0 / 0 +15 +25 / +90 / Renolin CLP 680 Plus	SEW070030013 / 0 +15 +25 / +90 / Mobilgear 600 XP 680	S0 / 0 +15 +25 / +90 / Klüberoil GEM 1-680 N		S0 / 0 +15 +25 / +90 / Meropa 680	S0 / 0 +15 +25 / +90 / Carter EP 680
	VG 1000	S0 / +5 +20 +30 / +90 / Optigear BM 1000						

17909427211

22769650/EN – 03/2017

The lubricant table is valid when this document is printed. Please refer to www.sew-eurodrive.de/lubricants for the latest version of the table.

DIN (ISO) API	ISO,SAE NLGI	Castrol			FUCHS			Mobil®			KLÜBER LUBRICATION			Shell			TEXACO			TOTAL		
CLP HC	VG 32 [1]							-40 -30 -25	SHC 624	+30												
								S0			S0			S0								
	VG 68 [1]				-35 -20 -10	Renolin Unisyn CLP 68	+50	-40 -25 -15	SHC 626	+50	-35 -20 -10	Klübersynth GEM 4-68 N	+50	-40 -20 -10	Omala S4 GX 68	+50	-25 -10 0	Pinnacle EP 150	+70	-35 -15 -5	Carter SH 150	+75
					S0			S0			S0			S0			S0			S0		
	VG 150 [1]	-25 -10 0	Alphasyn EP 150	+70	-30 -10 +0	Renolin Unisyn CLP 150	+70	-30 -10 -5	SHC 629	+75	-25 -10 0	Klübersynth GEM 4-150 N	70	-30 -10 0	Omala S4 GX 150	+75	-25 -5 +5	Pinnacle EP 150	+80	-25 -5 +5	Carter SH 150	+80
		S0			S0			S0			S0			S0			S0			S0		
	VG 220	-25 -5 +5	Alphasyn EP 220	+80	-25 -5 +5	Optigear Synthetic X 150	+80	-25 -5 0	SHC 630	+85	-30 -10 +5	Klübersynth GEM 4-220 N	+80	-25 -5 +5	Omala S4 GX 220	+85	-25 -5 +5	Pinnacle EP 220	+80	-25 -5 +5	Carter SH 220	+80
		S0			S0			S0			S0			S0			S0			S0		
	VG 320	-20 0 +10	Alphasyn EP 320	+90	-20 0 +10	Optigear Synthetic X 220	+90	-20 0 +10	SHC 632	+95	-25 -5 +10	Klübersynth GEM 4-320 N	+95	-20 0 +10	Omala S4 GX 320	+95	-20 0 +10	Pinnacle EP 320	+90	-20 0 +10	Carter SH 320	+90
		S0			S0			S0			S0			S0			S0			S0		
	VG 460	-15 +5 +15	Alphasyn EP 460	+100	-15 +5 +15	Optigear Synthetic X 320	+100	-15 +5 +15	SHC 634	+105	-20 0 +15	Klübersynth GEM 4-460 N	+105	-15 +5 +20	Omala S4 GX 460	+105	-15 +5 +15	Pinnacle EP 460	+100	-15 +5 +15	Carter SH 460	+100
		S0			S0			S0			S0			S0			S0			S0		
	VG 680	-10 +10 +25	Alphasyn EP 460	+110	-10 +10 +25	Optigear Synthetic X 460	+110	-10 +10 +25	SHC 636	+110	-15 +10 +25	Klübersynth GEM 4-460 N	+110	-10 +10 +25	Omala S4 GX 460	+110				-10 +10 +25	Carter SH 460	+110
		S0			S0			S0			S0			S0						S0		
					S0	Optigear Synthetic X 680		S0			S0			S0								
	VG 1000							-10 +15 +30	SHC 639	+110	-10 +15 +30	Klübersynth GEM 4-680 N	+110		Omala S4 GX 680							
								S0			S0			S0								
									SHC 1000		0 +20 +30	Klübersynth EG4-1000	+110									
											S0											

17909421835

The lubricant table is valid when this document is printed. Please refer to www.sew-eurodrive.de/lubricants for the latest version of the table.

DIN (ISO) API	ISO,SAE NLGI	bremer & leguil	Castrol	FUCHS	KLÜBER LUBRICATION
CLP HC NSF H1	VG 68 [1]	S0 Cassida Fluid HF 68 -35 -20 -10 +45	S0 Optileb HY 68 -40 -25 -15 +45		S0 Klüberoil 4UH1-68 N -35 -20 -10 +45
		S0 Cassida Fluid HF 68 -20 -5 +5 +75	S0 Optileb HY 68 -25 -5 +5 +75		S0 Klüberoil 4UH1-68 N -25 -5 +5 +75
	VG 220 [1]	S0 Cassida Fluid GL 220 -15 +5 +20 +90	S0 Optileb GT 220 -15 +5 +20 +95		S0 Klüberoil 4UH1-220 N -15 +5 +15 +95
	VG 460 [1]	S0 Cassida Fluid GL 460 -15 +5 +20 +90	S0 Optileb GT 460 -15 +5 +20 +95		S0 Klüberoil 4UH1-460 N -15 +5 +15 +95
E	VG 460			S0 Plantogear 460 S -15 +5 +15 +95	S0 Klüberbio CA2-460 -15 +5 +15 +95

17909432587

22766650/EN – 03/2017

5.5 Lubricant fill quantities

The specified fill quantity are guide values for 3-stage gear units in coaxial design. The exact values depend on the number of stages and the gear ratio of the gear unit.

The required oil quantity depends on the mark on the oil sight glass.

INFORMATION

Planetary gear units are delivered without lubricant.

5.5.1 XP2.P.: 2-stage planetary gear unit

Size	Oil quantity in liters/mounting position M1
XP130	90
XP140	100
XP150	115
XP160	135
XP170	160
XP180	170
XP190	245
XP200	265
XP210	Contact SEW-EURODRIVE.
XP220	
XP230	
XP240	
XP250	

5.5.2 XP3.P.: 3-stage planetary gear unit

Size	Oil quantity in liters/mounting position M1
XP130	97
XP140	105
XP150	120
XP160	145
XP170	170
XP180	182
XP190	260
XP200	285
XP210	390
XP220	415
XP230	475
XP240	550
XP250	660

22766650/EN – 03/2017

5.5.3 XP4.P.: 4-stage planetary gear unit

Size	Oil quantity in liters/mounting position M1
XP130	115
XP140	125
XP150	145
XP160	170
XP170	200
XP180	215
XP190	305
XP200	330
XP210	450
XP220	480
XP230	550
XP240	635
XP250	765

5.5.4 XP3F.: 3-stage helical-planetary gear unit

Size	Oil quantity in liters/mounting position M1
XP130	110
XP140	120
XP150	135
XP160	160
XP170	190
XP180	205
XP190	290
XP200	315
XP210	430
XP220	560
XP230	525
XP240	605
XP250	730

5.5.5 XP4K.: 4-stage bevel-planetary gear unit

Size	Oil quantity in liters/mounting position M1
XP130	112
XP140	120
XP150	145
XP160	170
XP170	200
XP180	212
XP190	300
XP200	325
XP210	450
XP220	475
XP230	550
XP240	625
XP250	740

22766650/EN – 03/2017

6 Design and operating notes

6.1 Screws included in the delivery

The screws at the flange are included in the delivery for the following gear unit designs:

- Gear unit with foot mounting

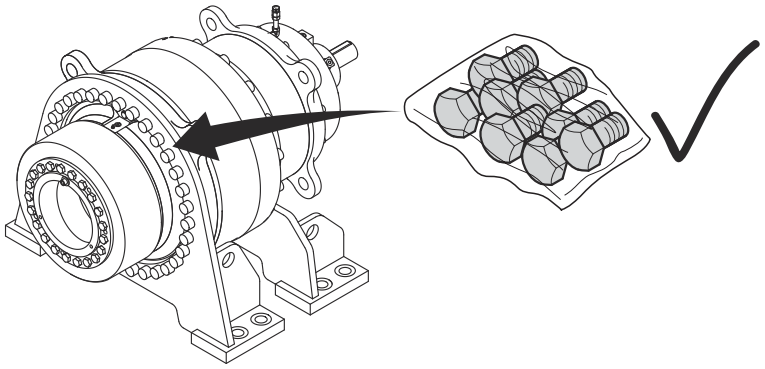

17459709323

- Torque arm

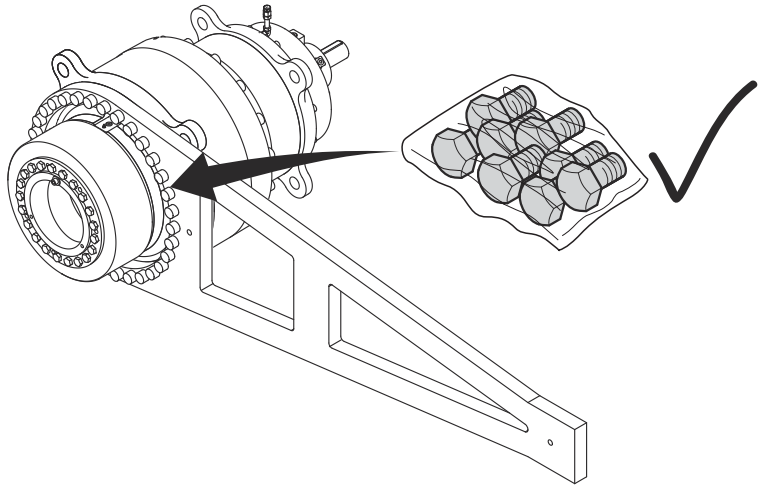

17459712011

22766650/EN – 03/2017

6.2 Screws not included in the delivery

The screws at the flange are NOT included in the delivery for the following gear unit designs:

- Gear unit with flange mounting

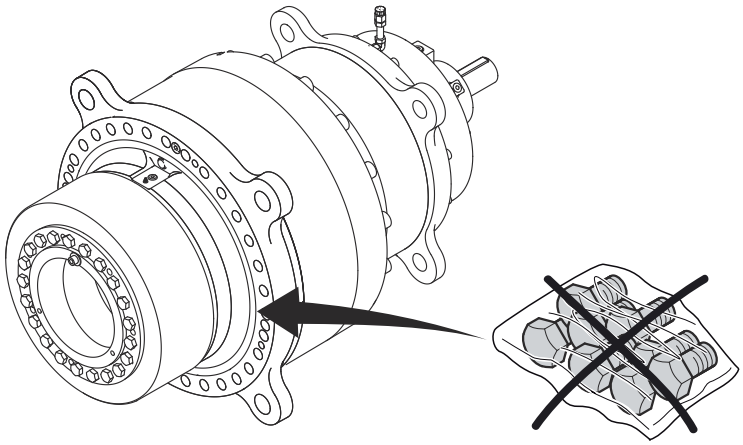

17459812107

22766650/EN – 03/2017

7 Gear ratio

7.1 XP2P.: 2-stage planetary gear unit

i_{nom}	XP size/gear ratio i_{ex}												
	XP130	XP140	XP150	XP160	XP170	XP180	XP190	XP200	XP210	XP220	XP230	XP240	XP250
22.4	22.20	22.20	22.20	22.20	22.20	22.34	22.20	22.34	22.86	23.00	22.86	22.86	22.86
25	25.14	25.14	25.14	25.14	25.14	25.30	25.14	25.30	25.90	26.07	25.90	25.90	25.90
28	29.25	29.25	29.25	29.25	29.25	29.44	29.25	29.44	30.17	30.36	30.17	30.17	30.17

7.2 XP3P.: 3-stage planetary gear unit

i_{nom}	XP size/gear ratio i_{ex}												
	XP130	XP140	XP150	XP160	XP170	XP180	XP190	XP200	XP210	XP220	XP230	XP240	XP250
120	123.7	123.7	123.7	123.7	123.7	124.5	123.7	124.5	127.4	128.1	127.4	127.4	127.4
130	135.9	135.9	135.9	135.9	135.9	136.7	135.9	136.7	139.9	140.8	139.9	139.9	139.9
140	140.1	140.1	140.1	140.1	140.1	141	140.1	141	144.3	145.2	144.3	144.3	144.3
150	153.9	153.9	153.9	153.9	153.9	154.8	153.9	154.8	158.5	159.5	158.5	158.5	158.5
160	163	163	163	163	163	164	163	164	168.1	169.2	168.1	168.1	168.1
180	179.1	179.1	179.1	179.1	179.1	180.2	179.1	180.2	184.7	185.8	184.7	184.7	184.7
200	199.8	199.8	199.8	199.8	199.8	201.1	199.8	201.1	205.7	207	205.7	205.7	205.7
220	226.3	226.3	226.3	226.3	226.3	227.7	226.3	227.7	233.1	234.6	233.1	233.1	233.1
240	240.8	240.8	240.8	240.8	240.8	242.3	240.8	242.3	247.9	249.5	247.9	247.9	247.9
260	263.3	263.3	263.3	263.3	263.3	265	263.3	265	271.5	273.2	271.5	271.5	271.5
280	272.7	272.7	272.7	272.7	272.7	274.4	272.7	274.4	281	282.7	281	281	281
320	317.3	317.3	317.3	317.3	317.3	319.3	317.3	319.3	327.2	329.3	327.2	327.2	327.2

22766650/EN – 03/2017

7.3 XP4P.: 4-stage planetary gear unit

i_{nom}	XP size/gear ratio i_{ex}												
	XP130	XP140	XP150	XP160	XP170	XP180	XP190	XP200	XP210	XP220	XP230	XP240	XP250
700	689.2	689.2	689.2	689.2	689.2	693.5	689.2	693.5	709.5	713.9	709.5	709.5	709.5
750	757.1	757.1	757.1	757.1	757.1	761.8	757.1	761.8	779.3	784.2	779.3	779.3	779.3
800	780.4	780.4	780.4	780.4	780.4	785.3	780.4	785.3	804.1	809.1	804.1	804.1	804.1
900	908.1	908.1	908.1	908.1	908.1	913.8	908.1	913.8	883.3	888.8	883.3	883.3	883.3
1000	997.6	997.6	997.6	997.6	997.6	1003.7	997.6	1003.7	1028.7	976.3	1028.7	1028.7	1028.7
1100	1095.8	1095.8	1095.8	1095.8	1095.8	1102.6	1095.8	1102.6	1130.1	1137.1	1130.1	1130.1	1130.1
1200	1223.0	1223.0	1223.0	1223.0	1223.0	1230.7	1223.0	1230.7	1146.2	1153.3	1146.2	1146.2	1146.2
1300	1260.7	1260.7	1260.7	1260.7	1260.7	1268.6	1260.7	1268.6	1299.0	1307.0	1299.0	1299.0	1299.0
1400	1384.9	1384.9	1384.9	1384.9	1384.9	1393.6	1384.9	1393.6	1381.7	1390.3	1381.7	1381.7	1381.7
1500	1519.2	1519.2	1519.2	1519.2	1519.2	1483.6	1519.2	1483.6	1512.5	1522.0	1512.5	1512.5	1512.5
1600	1611.5	1611.5	1611.5	1611.5	1611.5	1621.5	1611.5	1621.5	1566.0	1575.7	1566.0	1566.0	1566.0
1700	1669.5	1669.5	1669.5	1669.5	1669.5	1680.0	1669.5	1680.0	1719.5	1672.2	1719.5	1719.5	1719.5
1800	1798.6	1798.6	1798.6	1798.6	1798.6	1809.8	1798.6	1809.8	1823.1	1834.5	1823.1	1823.1	1823.1
1900	1942.1	1942.1	1942.1	1942.1	1942.1	1954.2	1942.1	1954.2	1851.4	1863.0	1851.4	1851.4	1851.4
2000	2036.6	2036.6	2036.6	2036.6	2036.6	1954.8	2036.6	1954.8	2002.7	2015.3	2002.7	2002.7	2002.7
2100	2036.6	2036.6	2036.6	2036.6	2036.6	2049.3	2036.6	2049.3	2098.3	2111.4	2098.3	2098.3	2098.3
2200	2168.3	2168.3	2168.3	2168.3	2168.3	2181.8	2168.3	2181.8	2231.2	2245.5	2231.2	2231.2	2231.2
2300	2369.8	2369.8	2369.8	2369.8	2369.8	2384.6	2369.8	2384.6	2232.0	2246.0	2232.0	2232.0	2232.0
2400	2369.8	2369.8	2369.8	2369.8	2369.8	2384.6	2369.8	2384.6	2443.5	2458.8	2443.5	2443.5	2443.5
2500	2455.2	2455.2	2455.2	2455.2	2455.2	2470.5	2455.2	2470.5	2528.7	2458.8	2528.7	2528.7	2528.7
2600	2613.0	2613.0	2613.0	2613.0	2613.0	2629.3	2613.0	2629.3	2529.6	2545.4	2529.6	2529.6	2529.6
2700	2613.0	2613.0	2613.0	2613.0	2613.0	2629.3	2613.0	2629.3	2689.8	2707.1	2689.8	2689.8	2689.8
2800	2856.0	2856.0	2856.0	2856.0	2856.0	2873.8	2856.0	2873.8	2689.8	2707.1	2689.8	2689.8	2689.8
2900	2856.9	2856.9	2856.9	2856.9	2856.9	2874.8	2856.9	2874.8	2945.2	2963.6	2945.2	2945.2	2945.2
3000	2958.8	2958.8	2958.8	2958.8	2958.8	2977.3	2958.8	2977.3	3048.5	2964.2	3048.5	3048.5	3048.5
3100	2958.8	2958.8	2958.8	2958.8	2958.8	2977.3	2958.8	2977.3	3048.5	3067.5	3048.5	3048.5	3048.5
3200	2958.8	2958.8	2958.8	2958.8	2958.8	2977.3	2958.8	2977.3	3048.5	3067.5	3048.5	3048.5	3048.5
3300	3443.0	3443.0	3443.0	3443.0	3443.0	3464.5	3443.0	3464.5	3550.6	3067.5	3550.6	3550.6	3550.6
3400	3443.0	3443.0	3443.0	3443.0	3443.0	3464.5	3443.0	3464.5	3550.6	3572.8	3550.6	3550.6	3550.6
3500	3443.0	3443.0	3443.0	3443.0	3443.0	3464.5	3443.0	3464.5	3550.6	3572.8	3550.6	3550.6	3550.6
3600	3443.0	3443.0	3443.0	3443.0	3443.0	3464.5	3443.0	3464.5	3550.6	3572.8	3550.6	3550.6	3550.6

22766650/EN – 03/2017

7.4 XP3F.: 3-stage helical-planetary gear unit

i_{nom}	XP size/gear ratio i_{ex}												
	XP130	XP140	XP150	XP160	XP170	XP180	XP190	XP200	XP210	XP220	XP230	XP240	XP250
45	44.4	44.4	43.8	43.8	44.4	44.7	44.4	44.7	44.4	46.0	45.7	45.7	45.7
50	50.3	50.3	49.5	49.5	50.3	50.6	50.3	50.6	50.3	52.2	51.8	51.8	51.8
55	55.5	55.5	55.5	55.5	56.8	57.1	56.8	57.1	56.8	58.8	56.3	56.3	56.3
60	58.5	58.5	57.6	57.6	58.5	58.9	58.5	58.9	58.5	60.7	60.3	60.3	60.3
65	62.8	62.8	62.8	62.8	64.3	64.7	64.3	64.7	64.3	66.7	63.8	63.8	63.8
70	69.4	69.4	69.4	69.4	70.5	71.0	70.5	71.0	70.5	73.0	70.6	70.6	70.6
75	73.1	73.1	73.1	73.1	74.8	75.2	74.8	75.2	74.8	77.6	74.3	74.3	74.3
80	78.5	78.5	78.5	78.5	79.8	80.3	79.8	80.3	79.8	82.8	80.1	80.1	80.1
90	91.4	91.4	91.4	91.4	92.9	93.4	92.9	93.4	92.9	96.4	93.2	93.2	93.2
100	99.9	99.9	99.4	99.4	98.9	99.5	98.9	99.5	97.7	101.2	100.5	100.5	100.5
110	113.1	113.1	112.5	112.5	111.9	112.6	111.9	112.6	110.6	114.8	114.0	114.0	114.0

7.5 XP4K.: 4-stage bevel-planetary gear unit

i_{nom}	XP size/gear ratio i_{ex}												
	XP130	XP140	XP150	XP160	XP170	XP180	XP190	XP200	XP210	XP220	XP230	XP240	XP250
180	172.1	172.1	172.1	194.9	189.1	-	189.1	-	-	-	-	-	-
200	194.9	194.9	194.9	194.9	194.9	215.4	194.9	-	-	-	203.1	-	-
225	221.4	226.8	225.6	226.8	226.8	228.2	226.8	228.2	220.6	-	223.1	236.6	-
250	250.7	250.7	249.1	249.1	250.7	250.7	250.7	250.7	256.9	258.5	253.1	259.9	259.9
280	278.0	278.0	280.6	280.6	278.0	279.8	278.0	279.8	283.7	-	286.9	286.9	289.5
320	320.4	320.4	326.5	326.5	320.4	322.4	320.4	322.4	324.4	326.4	328.1	328.1	328.1
360	357.6	357.6	364.4	364.4	357.6	359.8	357.6	359.8	368.1	370.4	368.1	368.1	372.2
400	404.9	404.9	405.9	405.9	404.9	407.5	404.9	407.5	390.9	393.4	395.4	395.4	395.4
450	453.0	453.0	453.0	453.0	453.0	455.8	453.0	455.8	455.3	446.4	448.6	448.6	448.6
500	495.8	512.9	497.3	497.3	497.3	500.4	512.9	491.0	502.8	505.9	502.8	502.8	502.8
550	553.4	545.9	553.4	545.9	553.4	549.3	553.4	549.3	561.9	565.4	561.9	561.9	-
600	596.8	596.8	596.8	596.8	596.8	600.6	596.8	600.6	585.6	589.3	592.2	592.2	592.2
650	666.9	666.9	666.9	666.9	666.9	630.6	666.9	671.1	645.6	640.8	645.6	636.9	636.9
700	708.5	719.3	708.5	719.3	708.5	723.8	708.5	723.8	-	-	-	686.5	-
750	755.2	755.2	755.2	755.2	755.2	759.9	755.2	759.9	752.0	746.4	752.0	752.0	752.0
800	802.3	802.3	802.3	-	802.3	807.3	802.3	-	778.1	782.9	778.1	778.1	778.1
850	853.8	853.8	853.8	853.8	853.8	859.2	853.8	859.2	826.6	-	826.6	879.0	-
900	878.8	878.8	878.8	878.8	878.8	884.2	878.8	884.2	906.2	911.9	906.2	906.2	906.2
1000	1125	1125	1125	1125	1125	1132	1125	1132	1160	1002	1160	1160	1160

22766650/EN – 03/2017

8 Thermal rating for XP3P..

The following table applies for the following conditions:

- T_{oil} = 90 °C
- $T_{ambient}$ = 30 °C
- Installation altitude: 0 to 1000 meters
- Operational environment: large halls and rooms
- Input speed: 750 – 1800 min^{-1}

	XP size/thermal rating specifications in kW												
i_{nom}	**XP130**	**XP140**	**XP150**	**XP160**	**XP170**	**XP180**	**XP190**	**XP200**	**XP210**	**XP220**	**XP230**	**XP240**	**XP250**
120	345	390	390	430	490	550	630	720	910	1010	1130	1300	1390
130	340	385	385	425	480	545	625	715	910	1010	1130	1300	1390
140	345	420	425	465	530	605	685	785	900	985	1130	1280	1380
150	345	420	420	460	520	595	670	780	780	860	960	1115	1185
160	310	350	355	390	440	500	560	655	775	845	960	1090	1175
170	310	350	355	390	440	500	560	655	810	895	1015	1175	1250
180	300	345	350	380	430	495	560	650	795	885	1000	1145	1230
200	330	375	375	380	460	530	610	680	875	955	1080	1245	1330
220	345	405	405	445	505	570	655	745	745	810	920	1055	1140
240	320	360	365	400	450	505	585	660	835	925	1030	1190	1290
260	295	335	340	370	420	470	550	630	775	850	960	1115	1180
280	345	385	390	430	480	545	630	710	715	790	890	1015	1100
320	285	325	325	360	400	460	525	605	740	815	930	1060	1140

INFORMATION

For more thermal ratings, contact SEW-EURODRIVE.

22766650/EN – 03/2017

9 Required cooling capacity

The following table applies for the following conditions:

- Ambient temperature: 20, 30 or 40 °C
- Water temperature: 25 °C
- Max. oil temperature: 80 °C
- Operational environment: large halls and rooms
- Installation altitude: 0 to 1000 meters
- Mounting position M1
- 3-stage XP gear unit
- Drive power P_{k1}

Pk1 kW	XP size																				
	XP130			XP140			XP150			XP160			XP170			XP180			XP190		
	Ambient temperature °C																				
	20	30	40	20	30	40	20	30	40	20	30	40	20	30	40	20	30	40	20	30	40
	Cooling capacity in kW																				
200	5	5	5	-	-	-	-	-	-	-	-	-	-	-	-	-	-	-	-	-	-
300	5	9	9	5	5	9	5	5	9	5	5	9	-	-	-	-	-	-	-	-	-
400	9	9	14	9	9	9	9	9	9	9	9	9	9	9	9	5	9	9	-	-	-
500	14	14	14	14	14	14	14	14	14	14	14	14	9	14	14	9	9	14	9	9	14
600	14	22	22	22	22	22	14	22	22	14	22	22	14	14	22	14	14	14	14	14	14
700	22	22	22	22	22	22	22	22	22	22	22	22	22	22	22	22	22	22	14	22	22
800	-	-	-	22	30	30	22	30	30	22	30	22	22	22	22	22	22	22	22	22	22
900	-	-	-	-	-	-	30	30	30	22	30	30	30	30	30	22	30	30	22	22	30
1000	-	-	-	-	-	-	30	30	30	30	30	30	30	30	30	30	30	30	30	30	30

Pk1 kW	XP size																	
	XP200			XP210			XP220			XP230			XP240			XP250		
	Ambient temperature °C																	
	20	30	40	20	30	40	20	30	40	20	30	40	20	30	40	20	30	40
	Cooling capacity in kW																	
500	9	9	9	-	-	-	-	-	-	-	-	-	-	-	-	-	-	-
600	9	14	14	14	14	14	-	-	-	-	-	-	-	-	-	-	-	-
700	14	14	22	14	22	22	14	14	14	-	-	-	-	-	-	-	-	-
800	22	22	22	22	22	22	14	14	22	22	22	22	-	-	-	-	-	-
900	22	22	22	22	22	22	22	22	22	22	22	22	22	22	22	-	-	-
1000	30	30	30	22	30	30	22	22	30	22	22	30	22	22	22	22	22	22
1100	30	30	30	30	30	30	30	30	30	30	30	30	22	22	30	22	22	30
1200	30	30	45	30	30	30	30	30	30	30	30	30	30	30	30	22	30	30
1300	45	45	45	30	45	45	30	30	45	30	30	45	30	30	45	30	30	30
1400	45	45	45	45	45	45	45	45	45	45	45	45	45	45	45	30	30	45
1500	45	45	45	45	45	45	45	45	45	45	45	45	45	45	45	45	45	45
1600	-	-	-	-	-	-	-	-	-	45	45	45	45	45	45	45	45	45
1700	-	-	-	-	-	-	-	-	-	45	45	45	45	45	70	45	45	45
1800	-	-	-	-	-	-	-	-	-	45	70	70	45	70	70	45	45	70
1900	-	-	-	-	-	-	-	-	-	70	70	70	70	70	70	45	70	70
2000	-	-	-	-	-	-	-	-	-	70	70	70	70	70	70	70	70	70

22766650/EN – 03/2017

10 Dimension sheets

10.1 Gear unit

10.1.1 XP2P.: 2-stage planetary gear unit

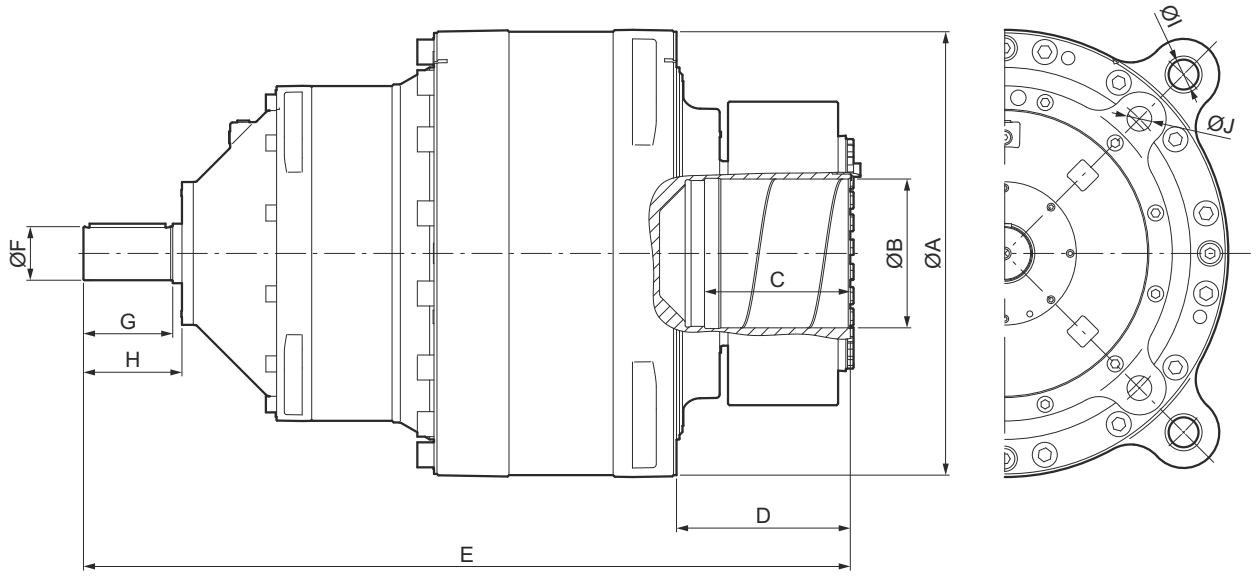

17475821963

Dimensions in mm												
XP	**Ø A**	**Ø B**	**C**	**D**	**E**	**Ø F**	**G**	**H**	**Ø I**	**Ø J**	**kg**	**Fill quantity in liters (M1)**
XP130	1045	320^{H7}	315	442	1873	150_{m6}	250	277	80	70	4810	90
XP140	1045	340^{H7}	325	458	1946	150_{m6}	250	277	80	70	5325	100
XP150	1070	360^{H7}	325	439	2028	150_{m6}	250	277	80	70	5860	115
XP160	1160	380^{H7}	365	485	2095	150_{m6}	250	277	85	70	6710	135
XP170	1260	400^{H7}	375	505	2286	180_{m6}	300	331	90	80	8555	160
XP180	1300	450^{H7}	405	538	2365	180_{m6}	300	331	90	80	9715	170
XP190	1390	470^{H7}	435	529	2502	180_{m6}	300	331	90	85	12260	245
XP200	1500	500^{H7}	490	584	2577	180_{m6}	300	331	100	85	14160	265
XP210	1625	530^{H7}	500	586	Contact SEW-EURODRIVE							
XP220	1690	560^{H7}	525	612								
XP230	1740	600^{H7}	555	624								
XP240	1930	640^{H7}	565	674								
XP250	1940	710^{H7}	625	724								

INFORMATION

The key and the keyways at the input shaft are in accordance with DIN 6885/1.

The weight is specified without oil fill.

22766650/EN – 03/2017

10.1.2 XP3P.: 3-stage planetary gear unit

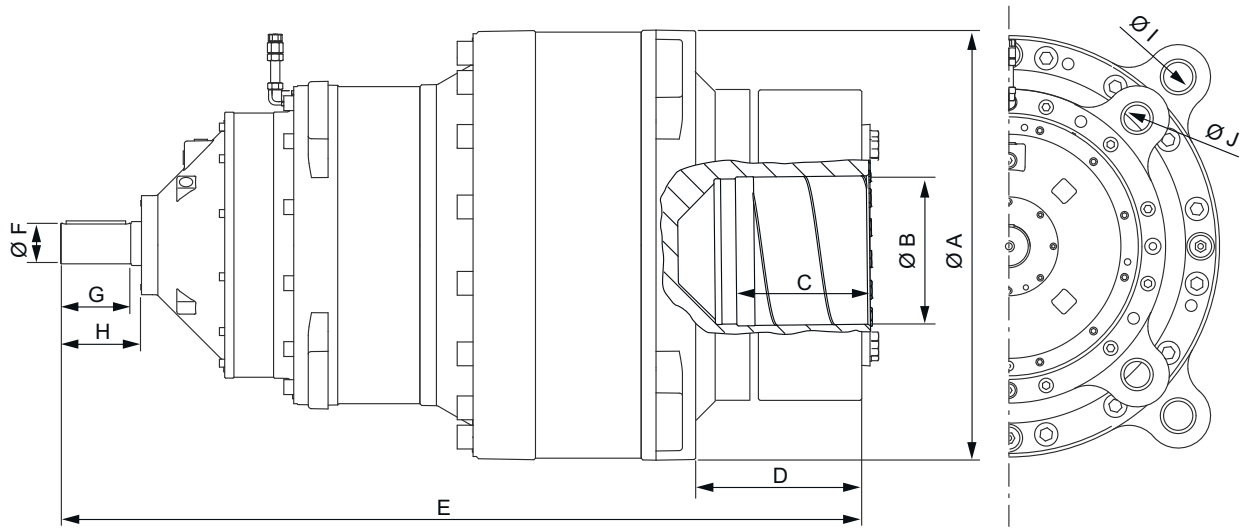

12543156491

Dimensions in mm											
XP	**A**	**B**	**C**	**D**	**E**	**Ø F**	**G**	**H**	**Ø I**	**Ø J**	**kg**
XP130	1045	320^{H7}	315	442	1963	100_{m6}	210	239	80	70	4930
XP140	1045	340^{H7}	325	458	2036	100_{m6}	210	239	80	70	5455
XP150	1070	360^{H7}	325	439	2168	100_{m6}	210	239	80	70	6120
XP160	1160	380^{H7}	365	485	2235	100_{m6}	210	239	85	70	6955
XP170	1260	400^{H7}	375	505	2387	120_{m6}	210	240	90	85	8800
XP180	1300	450^{H7}	405	538	2466	120_{m6}	210	240	90	85	9960
XP190	1390	470^{H7}	435	529	2678	150_{m6}	250	276	90	85	12825
XP200	1500	500^{H7}	490	584	2753	150_{m6}	250	276	100	85	14730
XP210	1625	530^{H7}	500	586	3035	180_{m6}	300	331	100	85	19650
XP220	1690	560^{H7}	525	612	3083	180_{m6}	300	331	120	90	21845
XP230	1740	600^{H7}	555	624	3240	180_{m6}	300	331	120	90	25865
XP240	1930	640^{H7}	565	674	3280	180_{m6}	300	331	120	90	29620
XP250	1940	710^{H7}	625	724	3570	180_{m6}	300	331	120	90	34125

INFORMATION

The key and the keyways at the input shaft are in accordance with DIN 6885/1.

The weight is specified without oil fill.

22766650/EN – 03/2017

10.1.3 XP4P.: 4-stage planetary gear unit

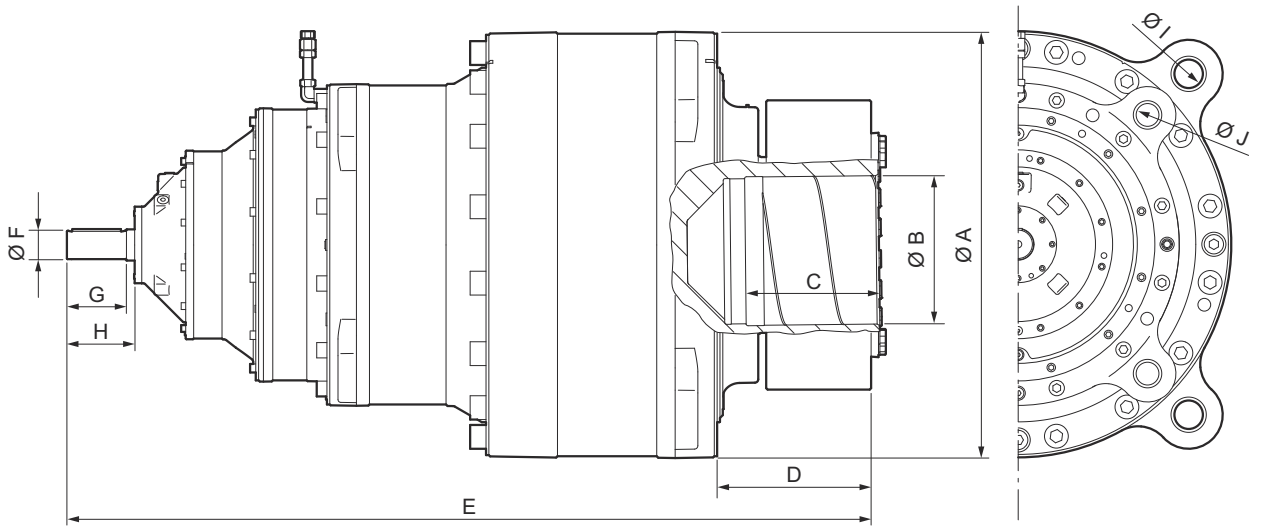

18948627851

Dimensions in mm											
XP	**A**	**B**	**C**	**D**	**E**	**Ø F**	**G**	**H**	**Ø I**	**Ø J**	**kg**
XP130	1045	320^{H7}	315	442	2079.5	60_{m6}	140	163	80	70	5165
XP140	1045	340^{H7}	325	458	2152.5	60_{m6}	140	163	80	70	5600
XP150	1070	360^{H7}	325	439	2298.5	60_{m6}	140	163	80	70	6420
XP160	1160	380^{H7}	365	485	2365.5	60_{m6}	140	163	85	70	7250
XP170	1260	400^{H7}	375	505	2479	60_{m6}	140	163	90	85	9020
XP180	1300	450^{H7}	405	538	2558	60_{m6}	140	163	90	85	10150
XP190	1390	470^{H7}	435	529	2802	100_{m6}	210	240	90	85	12640
XP200	1500	500^{H7}	490	584	2877	100_{m6}	210	240	100	85	13230
XP210	1625	530^{H7}	500	586	3140	100_{m6}	210	240	100	85	19940
XP220	1690	560^{H7}	525	612	3188	100_{m6}	210	240	120	90	22125
XP230	1740	600^{H7}	555	624	3345	100_{m6}	210	240	120	90	26255
XP240	1930	640^{H7}	565	674	3385	100_{m6}	210	240	120	90	29965
XP250	1940	710^{H7}	625	724	3643	120_{m6}	210	240	120	90	34630

INFORMATION

The key and the keyways at the input shaft are in accordance with DIN 6885/1.

The weight is specified without oil fill.

22766650/EN – 03/2017

10.1.4 XP3F: 3-stage helical-planetary gear unit

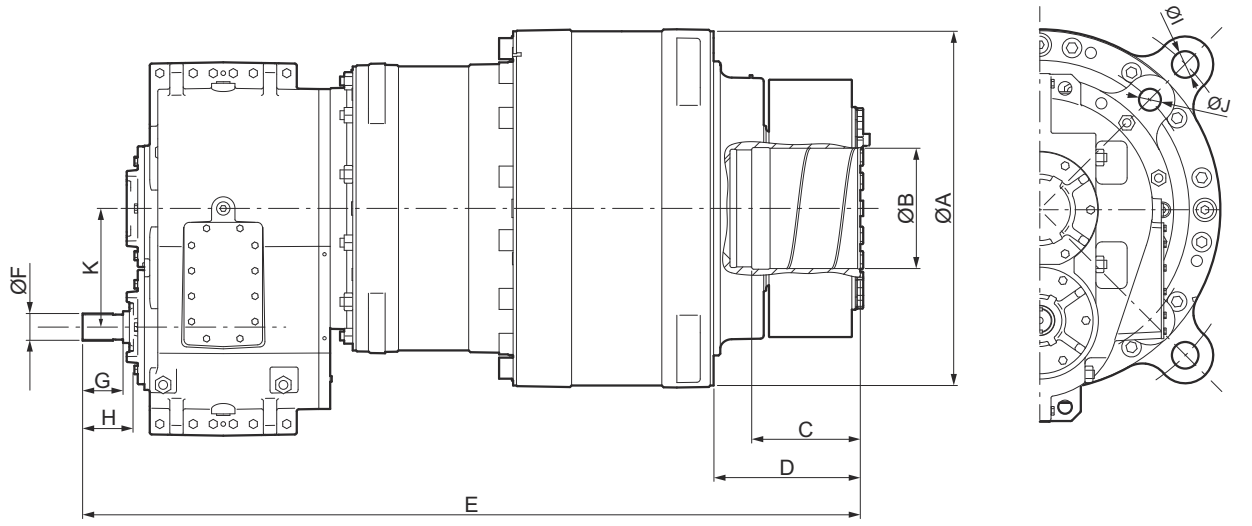

18595029259

Dimensions in mm												
XP	**A**	**B**	**C**	**D**	**E**	**Ø F**	**G**	**H**	**Ø I**	**Ø J**	**K**	**kg**
XP130	1045	320^{H7}	315	442	2140	110_{m6}	165	174	80	70	280	5640
XP140	1045	340^{H7}	325	458	2220	110_{m6}	165	174	80	70	280	6075
XP150	1070	360^{H7}	325	439	2420	140_{m6}	200	210	80	70	355	7237
XP160	1160	380^{H7}	365	485	2485	140_{m6}	200	210	85	70	355	8068
XP170	1260	400^{H7}	375	505	2670	150_{m6}	200	212	90	80	400	10070
XP180	1300	450^{H7}	405	538	2735	150_{m6}	200	212	90	80	400	11200
XP190	1390	470^{H7}	435	529	3005	170_{m6}	240	252	90	85	450	14250
XP200	1500	500^{H7}	490	584	3080	170_{m6}	240	252	100	85	450	14840
XP210	1625	530^{H7}	500	586	3325	180_{m6}	240	260	100	85	500	21723
XP220	1690	560^{H7}	525	612	3370	180_{m6}	240	260	120	90	500	24062
XP230	1740	600^{H7}	555	624	3675	200_{m6}	280	297	120	90	560	29422
XP240	1930	640^{H7}	565	674	3715	200_{m6}	280	297	120	90	560	33132
XP250	1940	710^{H7}	625	724	3930	200_{m6}	280	297	120	90	560	37632

INFORMATION

The key and the keyways at the input shaft are in accordance with DIN 6885/1.

The weight is specified without oil fill.

22766650/EN – 03/2017

10.1.5 XP4K.: 4-stage bevel-planetary gear unit

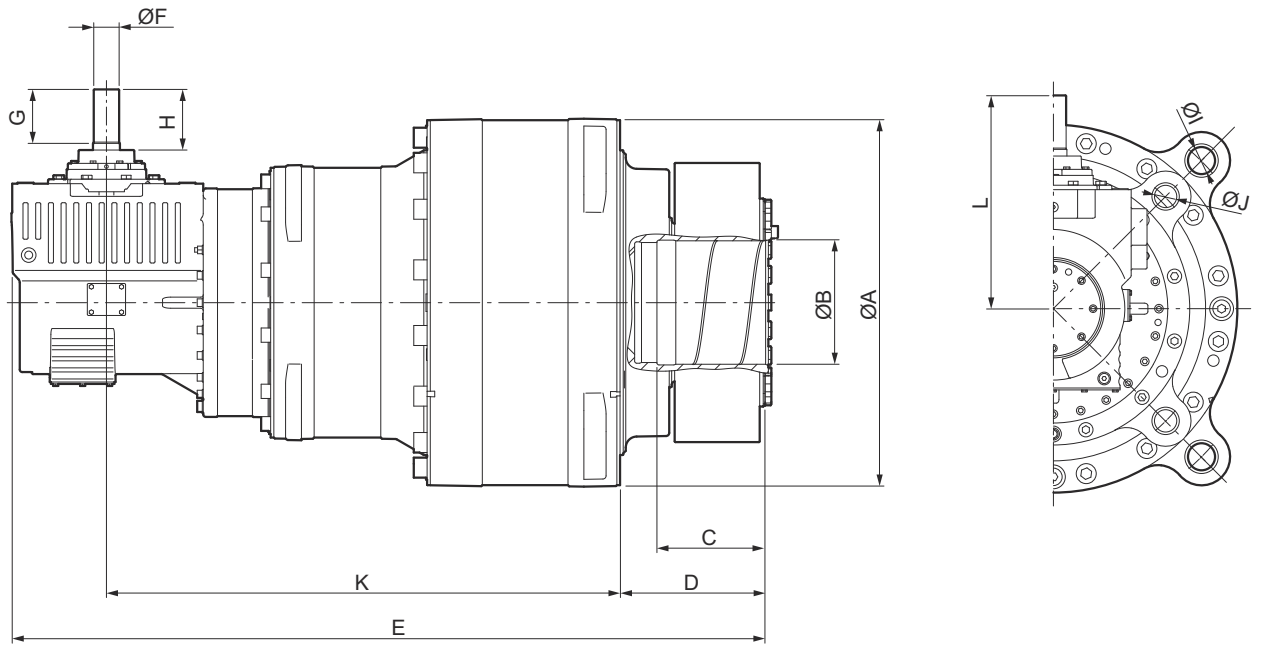

17475819275

Dimensions in mm													
XP	**A**	**B**	**C**	**D**	**E**	**Ø F**	**G**	**H**	**Ø I**	**Ø J**	**K**	**L**	**kg**
XP130	1045	320^{H7}	315	442	1963	70_{m6}	140	161	80	70	1339	591	5400
XP140	1045	340^{H7}	325	458	2036	70_{m6}	140	161	80	70	1396	591	5925
XP150	1070	360^{H7}	325	439	2168	80_{m6}	170	191	80	70	1597.5	672	6850
XP160	1160	380^{H7}	365	485	2235	80_{m6}	170	191	85	70	1618.5	672	7685
XP170	1255	400^{H7}	375	505	2387	85_{m6}	170	191	90	85	1752	736	9800
XP180	1300	450^{H7}	405	538	2466	85_{m6}	170	191	90	85	1798	736	10960
XP190	1390	470^{H7}	435	529	2678	100_{m6}	210	231	90	85	1957	821	14000
XP200	1500	500^{H7}	490	584	2753	100_{m6}	210	231	100	85	1977	821	15905
XP210	1625	530^{H7}	500	586	3035	110_{m6}	210	231	100	85	2259	912	21455
XP220	1690	560^{H7}	525	612	3083	110_{m6}	210	231	120	90	2281	912	23650
XP230	1740	600^{H7}	555	624	3240	120_{m6}	210	231	120	90	2426	1034	28055
XP240	1930	640^{H7}	565	674	3280	120_{m6}	210	231	120	90	2416	1034	31810
XP250	1940	710^{H7}	625	724	3570	120_{m6}	210	231	120	90	2583	1034	36215

INFORMATION

The key and the keyways at the input shaft are in accordance with DIN 6885/1.

The weight is specified without oil fill.

22766650/EN – 03/2017

10.2 Options

10.2.1 XP.S. Solid shaft with key on output side

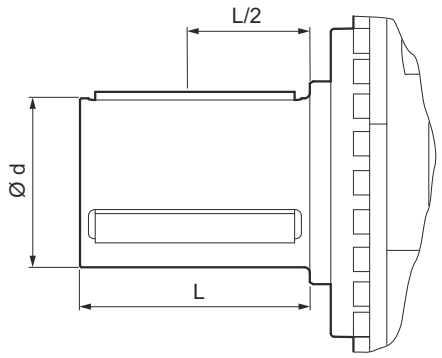

12545349259

XP	Diameter dimension (Ø d)			L
	Min.	Nominal value	Max.	
XP130	310	340	370	540
XP140	310	360	410	540
XP150	350	400	450	540
XP160	400	440	480	540
XP170	420	460	500	680
XP180	450	500	550	680
XP190	Upon request from SEW-EURODRIVE			
XP200				
XP210				
XP220				
XP230				
XP240				
XP250				

For complete dimension sheets, contact SEW-EURODRIVE.

22766650/EN – 03/2017

10.2.2 XP.C. Square output shaft

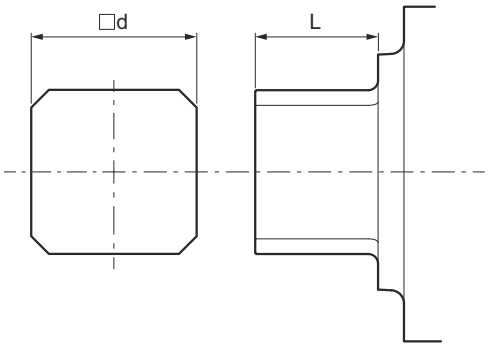

12546354315

XP	Dimensions of the square shaft			L
	Min.	Nominal value	Max.	
XP130	250	260	300	220
XP140	270	280	320	240
XP150	290	310	340	260
XP160	310	340	375	280
XP170	330	360	395	300
XP180	340	390	425	320
XP190	Upon request from SEW-EURODRIVE			
XP200				
XP210				
XP220				
XP230				
XP240				
XP250				

For complete dimension sheets, contact SEW-EURODRIVE.

22766650/EN – 03/2017

10.2.3 Torque arm – minimum length

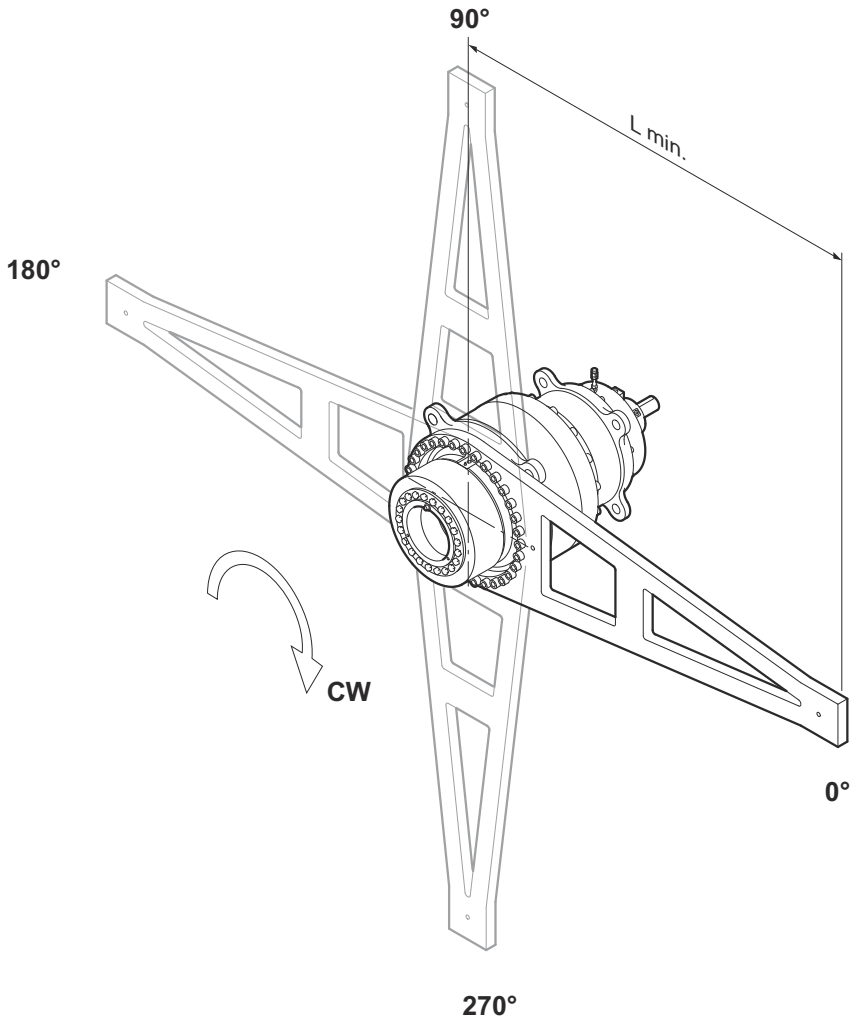

12833382155

	XP size / minimun length Lmin [m]												
	130	**140**	**150**	**160**	**170**	**180**	**190**	**200**	**210**	**220**	**230**	**240**	**250**
0°	2.0	2.5	3.0	3.0	4.0	4.5	5.5	6.0	6.5	8.0	8.5	10.0	10.0
45°	2.0	2.5	3.0	3.0	3.5	4.0	5.5	5.5	6.0	7.0	8.0	9.0	9.0
90°	2.0	2.5	2.5	2.5	3.0	3.5	4.5	4.5	5.0	5.5	6.0	6.5	6.5
135°	1.5	2.0	2.5	2.5	3.0	3.0	3.5	4.0	4.0	4.5	5.0	5.0	5.0
180°	1.5	2.0	2.5	2.5	2.5	3.0	3.5	3.5	3.5	4.0	4.5	4.5	4.5
225°	1.5	2.0	2.5	2.5	3.0	3.0	3.5	4.0	4.0	4.5	5.0	5.0	5.0
270°	2.0	2.5	2.5	2.5	3.0	3.5	4.5	4.5	5.0	5.5	6.0	6.5	6.5
315°	2.0	2.5	3.0	3.0	3.5	4.0	5.5	5.5	6.0	7.0	8.0	9.0	9.0

22766650/EN – 03/2017

10.2.4 Motor adapter

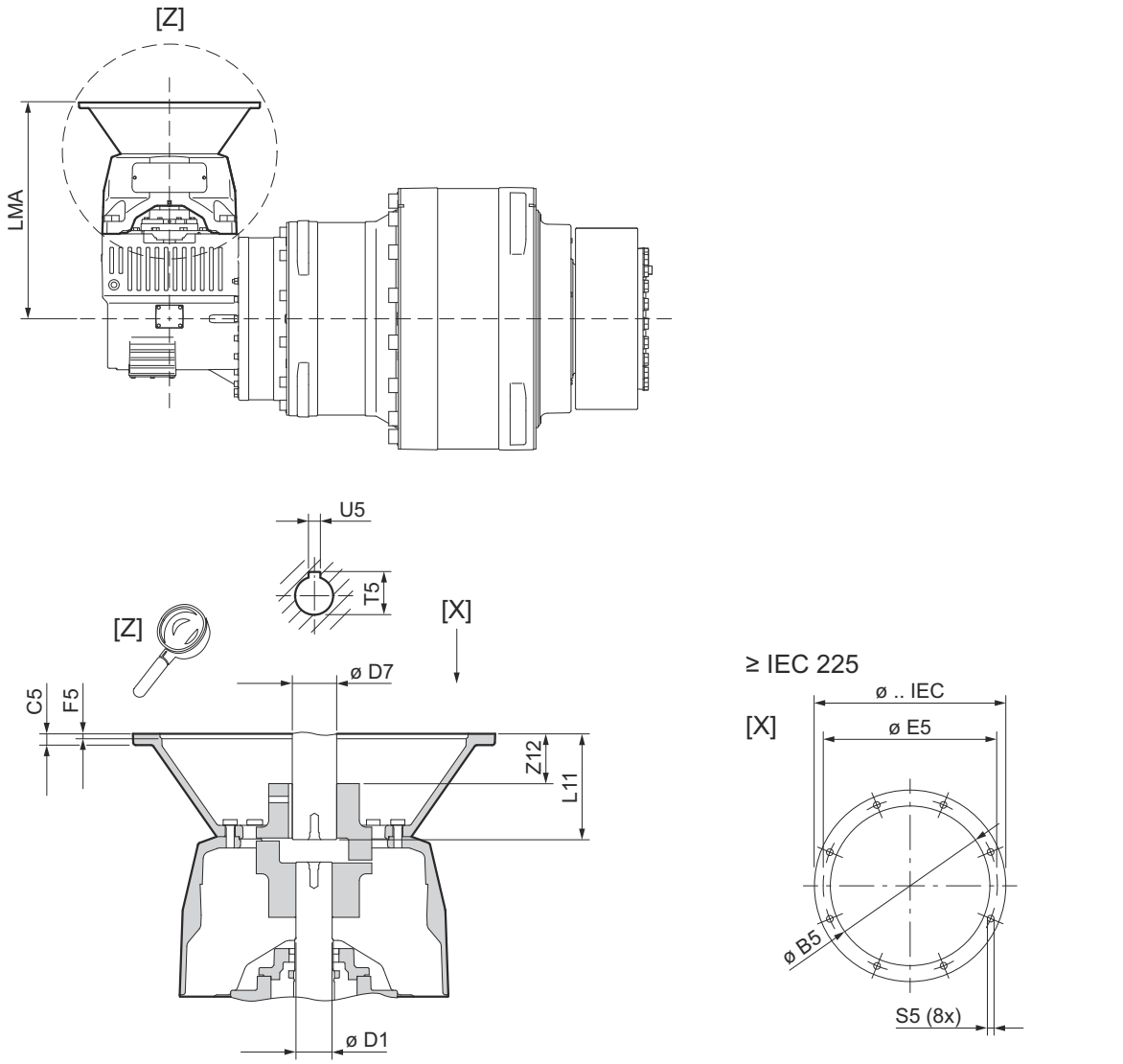

18590766347

XP4K..	IEC	Ø IEC	Ø B5	C5	Ø D7	Ø E5	F5	L11	S5	T5	U5	Ø D1	LMA	Z12	kg
	250	550	450^{H7}	25	65^{H7}	500	7	140	M16 (8x)	69.4	18^{JS9}	70	764	52	130
130-140	280	550	450^{H7}	25	75^{H7}	500	7	140	M16 (8x)	79.9	20^{JS9}	70	764	52	130
	315S-L	660	550^{H7}	25	80^{H7}	600	7	170	M20 (8x)	85.4	22^{JS9}	70	764	66	160
	250	550	450^{H7}	25	65^{H7}	500	7	140	M16 (8x)	69.4	18^{JS9}	80	840	50	150
	280	550	450^{H7}	25	75^{H7}	500	7	140	M16 (8x)	79.9	20^{JS9}	80	840	50	150
150-160	315S-L	660	550^{H7}	25	80^{H7}	600	7	170	M20 (8x)	85.4	22^{JS9}	80	879	62	180
	315	800	680^{H7}	25	85^{H7}	740	7	170	M20 (8x)	90.4	22^{JS9}	80	915	73	220
	355	800	680^{H7}	25	100^{H7}	740	7	210	M20 (8x)	106.4	28^{JS9}	80	955	110	250
	250	550	450^{H7}	25	65^{H7}	500	7	140	M16 (8x)	69.4	18^{JS9}	85	906	50	180
	280	550	450^{H7}	25	75^{H7}	500	7	140	M16 (8x)	79.9	20^{JS9}	85	906	50	180
170-180	315S-L	660	550^{H7}	25	80^{H7}	600	7	170	M20 (8x)	85.4	22^{JS9}	85	945	64.5	210
	315	800	680^{H7}	25	85^{H7}	740	7	170	M20 (8x)	90.4	22^{JS9}	85	981	60	250
	355	800	680^{H7}	25	100^{H7}	740	7	210	M20 (8x)	106.4	28^{JS9}	85	1021	100	275
	315S-L	660	680^{H7}	25	80^{H7}	600	7	170	M20 (8x)	85.4	22^{JS9}	100	994	32.5	225
190-200	315	800	680^{H7}	25	85^{H7}	740	7	170	M20 (8x)	90.4	22^{JS9}	100	1030	39	270
	355	800	680^{H7}	25	100^{H7}	740	7	210	M20 (8x)	106.4	28^{JS9}	100	1070	74	295
	315S-L	660	550^{H7}	25	80^{H7}	600	7	170	M20 (8x)	85.4	22^{JS9}	110	1076	33	265
210-220	315	800	680^{H7}	25	85^{H7}	740	7	170	M20 (8x)	90.4	22^{JS9}	110	1112	54	305
	355	800	680^{H7}	25	100^{H7}	740	7	210	M20 (8x)	106.4	28^{JS9}	110	1152	89	330

22766650/EN – 03/2017

10.2.5 Overview

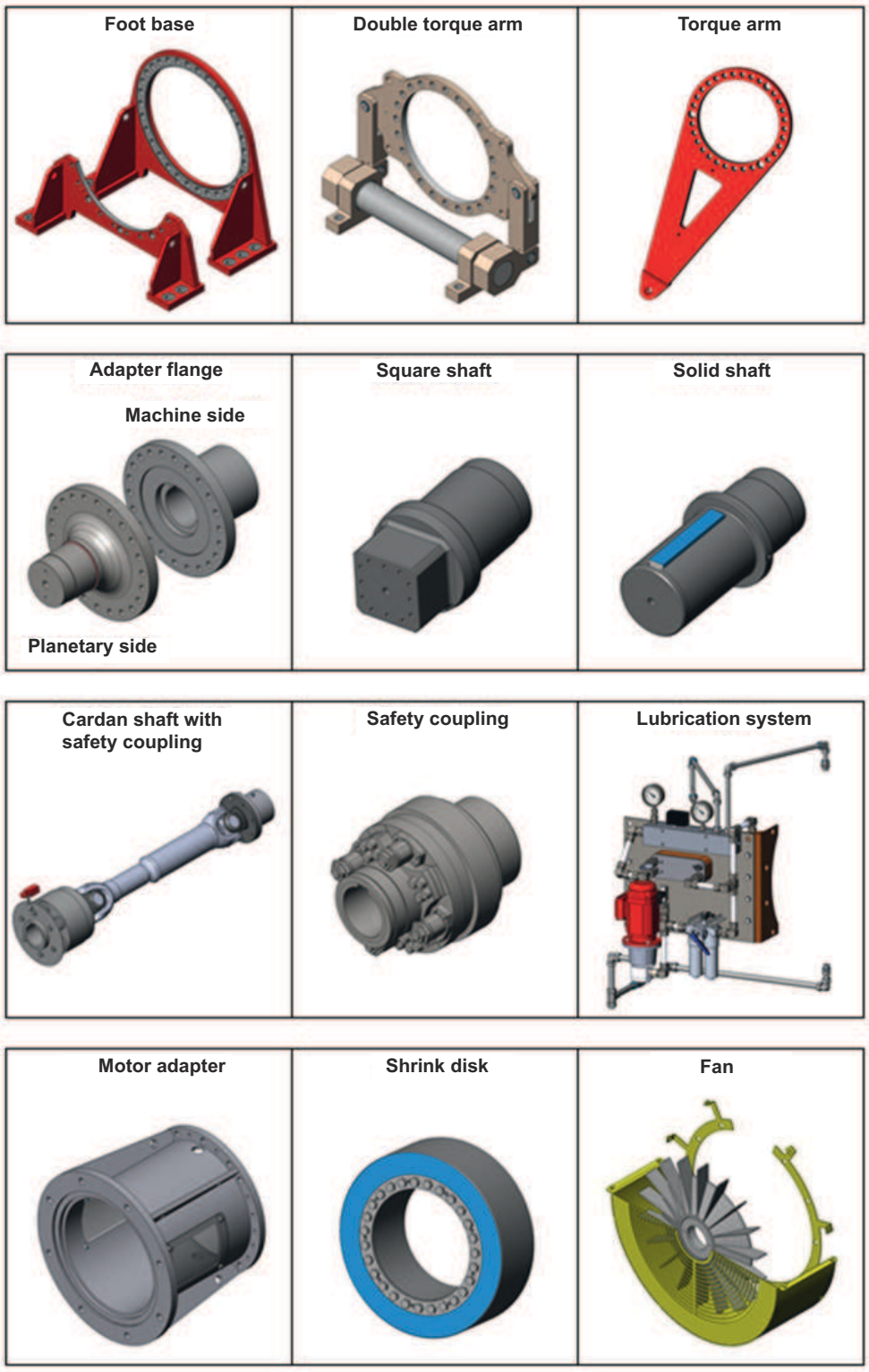

12583072651

22766650/EN – 03/2017

11 Address directory SEW-EURODRIVE

Algeria			
Sales	Algiers	REDUCOM Sarl 16, rue des Frères Zaghnoune Bellevue 16200 El Harrach Alger	Tel. +213 21 8214-91 Fax +213 21 8222-84 http://www.reducom-dz.com info@reducom-dz.com
Argentina			
Assembly Sales	Buenos Aires	SEW EURODRIVE ARGENTINA S.A. Ruta Panamericana Km 37.5, Lote 35 (B1619IEA) Centro Industrial Garín Prov. de Buenos Aires	Tel. +54 3327 4572-84 Fax +54 3327 4572-21 http://www.sew-eurodrive.com.ar sewar@sew-eurodrive.com.ar
	Córdoba	SEW EURODRIVE ARGENTINA S.A. Ruta Nacional 19, Manzana 97, Lote 5 (X5125) Malvinas Argentinas Prov. de Córdoba	Tel. +54 351-490-0010 http://www.sew-eurodrive.com.ar sewcor@sew-eurodrive.com.ar
	Santa Fe	SEW EURODRIVE ARGENTINA S.A. Ruta Prov. 21 Km 7, Lote 41 Parque Industrial Alvear (2126) Gral. Alvear Prov. de Santa Fe	Tel. +54 341-317-7277 http://www.sew-eurodrive.com.ar sewsfe@sew-eurodrive.com.ar
Service	Mendoza	SEW EURODRIVE ARGENTINA S.A. Francisco Gabrielli (ex Urquiza) 2060-Zona Industrial- Guaymallen- CP 5521	Tel. +54 261-4214150 http://www.sew-eurodrive.com.ar sewmen@sew-eurodrive.com.ar
Technical Offices	Tucumán	SEW EURODRIVE ARGENTINA S.A. Balcarce 609 (T4000IAM) S.M. de Tucumán Prov. de Tucumán	Tel. +54 381-400-4569 http://www.sew-eurodrive.com.ar sewtuc@sew-eurodrive.com.ar
	Bahía Blanca	SEW EURODRIVE ARGENTINA S.A. O'Higgins 95, 1er Piso A (B8000IVA) Bahía Blanca Prov. de Buenos Aires	Tel. +54 291-451-7345 http://www.sew-eurodrive.com.ar sewbb@sew-eurodrive.com.ar
	Neuquén	SEW EURODRIVE ARGENTINA S.A.	Tel. +549 299 588 7950 http://www.sew-eurodrive.com.ar sewnqn@sew-eurodrive.com.ar
Australia			
Assembly Sales Service	Melbourne	SEW-EURODRIVE PTY. LTD. 27 Beverage Drive Tullamarine, Victoria 3043	Tel. +61 3 9933-1000 Fax +61 3 9933-1003 http://www.sew-eurodrive.com.au enquires@sew-eurodrive.com.au
	Sydney	SEW-EURODRIVE PTY. LTD. 9, Sleigh Place, Wetherill Park New South Wales, 2164	Tel. +61 2 9725-9900 Fax +61 2 9725-9905 enquires@sew-eurodrive.com.au
Sales Service	Adelaide	SEW-EURODRIVE PTY. LTD. 9C Park Way Mawson Lakes, SA 5095	Tel. +61 8 8161 4000 Fax +61 8 8161 4002 enquires@sew-eurodrive.com.au
	Brisbane	SEW-EURODRIVE PTY. LTD. 1 /34 Collinsvale St Rocklea, Queensland, 4106	Tel. +61 7 3276 5100 Fax +61 7 3276 5102 enquires@sew-eurodrive.com.au
	Perth	SEW-EURODRIVE PTY. LTD. 10 Colin Jamieson Drive Welshpool, WA 6106	Tel. +61 8 9251-4900 Fax +61 8 9251-4903 enquires@sew-eurodrive.com.au
Sales	Townsville	SEW-EURODRIVE PTY. LTD. 12 Leyland Street Garbutt, QLD 4814	Tel. +61 7 4779 4333 Fax +61 7 4779 5333 enquires@sew-eurodrive.com.au
Austria			
Assembly Sales Service	Vienna	SEW-EURODRIVE Ges.m.b.H. Richard-Strauss-Straße 24 1230 Wien	Tel. +43 1 617 55 00-0 Fax +43 1 617 55 00-30 http://www.sew-eurodrive.at sew@sew-eurodrive.at
Technical Offices	Linz	SEW-EURODRIVE Ges.m.b.H. Jaxstraße 2-4 4020 Linz	Tel. +43 732 655 109-0 Fax +43 732 655 109-20 tb-linz@sew-eurodrive.at

22766650/EN – 03/2017

	Graz	SEW-EURODRIVE Ges.m.b.H. Grabenstraße 231 8045 Graz	Tel. +43 316 685 756-0 Fax +43 316 685 756-20 tb-graz@sew-eurodrive.at
	Dornbirn	SEW-EURODRIVE Ges.m.b.H. Lustenauerstraße 27/1 6850 Dornbirn	Tel. +43 5572 3725 99-0 Fax +43 5572 3725 99-20 tb-dornbirn@sew-eurodrive.at
Bangladesh			
Sales	Bangladesh	SEW-EURODRIVE INDIA PRIVATE LIMITED 345 DIT Road East Rampura Dhaka-1219, Bangladesh	Tel. +88 01729 097309 salesdhaka@seweurodrivebangladesh.com
Belarus			
Sales	Minsk	Foreign unitary production enterprise SEW-EURODRIVE RybalkoStr. 26 220033 Minsk	Tel. +375 17 298 47 56 / 298 47 58 Fax +375 17 298 47 54 http://www.sew.by sales@sew.by
Belgium			
Assembly Sales Service	Brussels	SEW-EURODRIVE n.v./s.a. Researchpark Haasrode 1060 Evenementenlaan 7 3001 Leuven	Tel. +32 16 386-311 Fax +32 16 386-336 http://www.sew-eurodrive.be info@sew-eurodrive.be
Service Competence Center	Industrial Gears	SEW-EURODRIVE n.v./s.a. Rue de Parc Industriel, 31 6900 Marche-en-Famenne	Tel. +32 84 219-878 Fax +32 84 219-879 http://www.sew-eurodrive.be service-IG@sew-eurodrive.be
Brazil			
Production Sales Service	São Paulo	SEW-EURODRIVE Brasil Ltda. Estrada Municipal José Rubim, 205 – Rodovia Santos Dumont Km 49 Indaiatuba – 13347-510 – SP	Tel. +55 19 3835-8000 sew@sew.com.br
Assembly Sales Service	Rio Claro	SEW-EURODRIVE Brasil Ltda. Rodovia Washington Luiz, Km 172 Condomínio Industrial Conpark Caixa Postal: 327 13501-600 – Rio Claro / SP	Tel. +55 19 3522-3100 Fax +55 19 3524-6653 montadora.rc@sew.com.br
	Joinville	SEW-EURODRIVE Brasil Ltda. Rua Dona Francisca, 12.346 – Pirabeiraba 89239-270 – Joinville / SC	Tel. +55 47 3027-6886 Fax +55 47 3027-6888 filial.sc@sew.com.br
Bulgaria			
Sales	Sofia	BEVER-DRIVE GmbH Bogdanovetz Str.1 1606 Sofia	Tel. +359 2 9151160 Fax +359 2 9151166 bever@bever.bg
Cameroon			
Sales	Douala	SEW-EURODRIVE S.A.R.L. Ancienne Route Bonabéri P.O. Box B.P 8674 Douala-Cameroun	Tel. +237 233 39 02 10 Fax +237 233 39 02 10 info@sew-eurodrive-cm
Canada			
Assembly Sales Service	Toronto	SEW-EURODRIVE CO. OF CANADA LTD. 210 Walker Drive Bramalea, ON L6T 3W1	Tel. +1 905 791-1553 Fax +1 905 791-2999 http://www.sew-eurodrive.ca l.watson@sew-eurodrive.ca
	Vancouver	SEW-EURODRIVE CO. OF CANADA LTD. Tilbury Industrial Park 7188 Honeyman Street Delta, BC V4G 1G1	Tel. +1 604 946-5535 Fax +1 604 946-2513 b.wake@sew-eurodrive.ca
	Montreal	SEW-EURODRIVE CO. OF CANADA LTD. 2555 Rue Leger Lasalle, PQ H8N 2V9	Tel. +1 514 367-1124 Fax +1 514 367-3677 a.peluso@sew-eurodrive.ca

22766650/EN – 03/2017

Chile			
Assembly Sales Service	Santiago de Chile	SEW-EURODRIVE CHILE LTDA Las Encinas 1295 Parque Industrial Valle Grande LAMPA Santiago de Chile P.O. Box Casilla 23 Correo Quilicura - Santiago - Chile	Tel. +56 2 2757 7000 Fax +56 2 2757 7001 http://www.sew-eurodrive.cl ventas@sew-eurodrive.cl
China			
Production Assembly Sales Service	Tianjin	SEW-EURODRIVE (Tianjin) Co., Ltd. No. 78, 13th Avenue, TEDA Tianjin 300457	Tel. +86 22 25322612 Fax +86 22 25323273 http://www.sew-eurodrive.cn info@sew-eurodrive.cn
Assembly Sales Service	Suzhou	SEW-EURODRIVE (Suzhou) Co., Ltd. 333, Suhong Middle Road Suzhou Industrial Park Jiangsu Province, 215021	Tel. +86 512 62581781 Fax +86 512 62581783 suzhou@sew-eurodrive.cn
	Guangzhou	SEW-EURODRIVE (Guangzhou) Co., Ltd. No. 9, JunDa Road East Section of GETDD Guangzhou 510530	Tel. +86 20 82267890 Fax +86 20 82267922 guangzhou@sew-eurodrive.cn
	Shenyang	SEW-EURODRIVE (Shenyang) Co., Ltd. 10A-2, 6th Road Shenyang Economic Technological Development Area Shenyang, 110141	Tel. +86 24 25382538 Fax +86 24 25382580 shenyang@sew-eurodrive.cn
	Taiyuan	SEW-EURODRIVE (Taiyuan) Co,. Ltd. No.3, HuaZhang Street, TaiYuan Economic & Technical Development Zone ShanXi, 030032	Tel. +86-351-7117520 Fax +86-351-7117522 taiyuan@sew-eurodrive.cn
	Wuhan	SEW-EURODRIVE (Wuhan) Co., Ltd. 10A-2, 6th Road No. 59, the 4th Quanli Road, WEDA 430056 Wuhan	Tel. +86 27 84478388 Fax +86 27 84478389 wuhan@sew-eurodrive.cn
	Xi'An	SEW-EURODRIVE (Xi'An) Co., Ltd. No. 12 Jinye 2nd Road Xi'An High-Technology Industrial Development Zone Xi'An 710065	Tel. +86 29 68686262 Fax +86 29 68686311 xian@sew-eurodrive.cn
Sales Service	Hong Kong	SEW-EURODRIVE LTD. Unit No. 801-806, 8th Floor Hong Leong Industrial Complex No. 4, Wang Kwong Road Kowloon, Hong Kong	Tel. +852 36902200 Fax +852 36902211 contact@sew-eurodrive.hk
Colombia			
Assembly Sales Service	Bogota	SEW-EURODRIVE COLOMBIA LTDA. Calle 17 No. 132-18 Interior 2 Bodega 6, Manzana B Santafé de Bogotá	Tel. +57 1 54750-50 Fax +57 1 54750-44 http://www.sew-eurodrive.com.co sew@sew-eurodrive.com.co
Croatia			
Sales Service	Zagreb	KOMPEKS d. o. o. Zeleni dol 10 10 000 Zagreb	Tel. +385 1 4613-158 Fax +385 1 4613-158 kompeks@inet.hr
Czech Republic			
Assembly Sales Service	Hostivice	SEW-EURODRIVE CZ s.r.o. Floriánova 2459 253 01 Hostivice	Tel. +420 255 709 601 Fax +420 235 350 613 http://www.sew-eurodrive.cz sew@sew-eurodrive.cz
	Drive Service Hotline / 24 Hour Service	+420 800 739 739 (800 SEW SEW)	Service Tel. +420 255 709 632 Fax +420 235 358 218 servis@sew-eurodrive.cz

22766650/EN – 03/2017

Assembly Service	Plzeň	SEW-EURODRIVE CZ s.r.o. Areal KRPA a.s. Zahradni 173/2 326 00 Plzeň	Tel. +420 378 775 320 Fax +420 377 970 710 sew@sew-eurodrive.cz
Technical Offices	Brno	SEW-EURODRIVE CZ s.r.o. Křenová 52 60200 Brno	Tel. +420 543 254 174 Fax +420 543 256 845 ilona.cermakova@sew-eurodrive.cz
	Hradec Králové	SEW-EURODRIVE CZ s.r.o. Čechova 498 50202 Hradec Králové	Tel. +420 495 510 141 Fax +420 495 521 313 miroslav.moravec@sew-eurodrive.cz
	Ostrava	SEW-EURODRIVE CZ s.r.o. Studentská 6202/17 708 00 Ostrava-Poruba	Tel. +420 597 329 044 david.kenkus@sew-eurodrive.cz
	Klatovy	SEW-EURODRIVE CZ s.r.o. Vídeňská 841 33901 Klatovy	Tel. +420 376 331 634 Fax +420 376 331 634 viktor.kubernat@sew-eurodrive.cz
Service	Přerov	SEW-EURODRIVE CZ s.r.o. Areál STS Přerov a.s. ul. 9. května 2452 750 02 Přerov I – Město	Tel. +420 581 224 374 Fax +420 581 224 374 servis@sew-eurodrive.cz
Denmark			
Assembly Sales Service	Copenhagen	SEW-EURODRIVEA/S Geminivej 28-30 2670 Greve	Tel. +45 43 95 8500 Fax +45 43 9585-09 http://www.sew-eurodrive.dk sew@sew-eurodrive.dk
Egypt			
Sales Service	Cairo	Copam Egypt for Engineering & Agencies Building 10, Block 13005, First Industrial Zone, Obour City Cairo	Tel. +202 44812673 / 79 (7 lines) Fax +202 44812685 http://www.copam-egypt.com copam@copam-egypt.com
Estonia			
Sales	Tallin	ALAS-KUUL AS Reti tee 4 75301 Peetri küla, Rae vald, Harjumaa	Tel. +372 6593230 Fax +372 6593231 http://www.alas-kuul.ee veiko.soots@alas-kuul.ee
Finland			
Assembly Sales Service	Hollola	SEW-EURODRIVE OY Vesimäentie 4 15860 Hollola	Tel. +358 201 589-300 Fax +358 3 780-6211 http://www.sew-eurodrive.fi sew@sew.fi
Service	Hollola	SEW-EURODRIVE OY Keskikankaantie 21 15860 Hollola	Tel. +358 201 589-300 Fax +358 3 780-6211 http://www.sew-eurodrive.fi sew@sew.fi
Production Assembly	Karkkila	SEW Industrial Gears Oy Santasalonkatu 6, PL 8 03620 Karkkila, 03601 Karkkila	Tel. +358 201 589-300 Fax +358 201 589-310 http://www.sew-eurodrive.fi sew@sew.fi
Technical Offices	Helsinki	SEW-EURODRIVE OY Luutnantintie 5 00410 Helsinki	Tel. +358 201 589-300 sew@sew.fi
	Oulu	SEW Industrial Gears Oy Paulaharjuntie 22 90530 Oulu	Tel. +358 201 589 300 sew@sew.fi
	Vaasa	SEW Industrial Gears Oy Asemakatu 7 65100 Vaasa	Tel. +358 201 589-300 sew@sew.fi
	Kuopio	SEW Industrial Gears Oy Leväsentie 23 70780 Kuopio	Tel. +358 201 589-300 sew@sew.fi
	Tampere	SEW Industrial Gears Oy Hermiankatu 3 A 33720 Tampere	Tel. +358 201 589-300 sew@sew.fi

22766650/EN – 03/2017

	Kotka	SEW Industrial Gears Oy Heikinkatu 7 48100 Kotka	Tel. +358 201 589 300 sew@sew.fi
France			
Production Sales Service	Hagenau	SEW-USOCOME 48-54 route de Soufflenheim B. P. 20185 67506 Haguenau Cedex	Tel. +33 3 88 73 67 00 Fax +33 3 88 73 66 00 http://www.usocome.com sew@usocome.com
Production	Forbach	SEW-USOCOME Zone industrielle Technopôle Forbach Sud B. P. 30269 57604 Forbach Cedex	Tel. +33 3 87 29 38 00
	Brumath	SEW-USOCOME 1 Rue de Bruxelles 67670 Mommenheim Cedex	Tel. +33 3 88 37 48 00
Assembly Sales Service	Bordeaux	SEW-USOCOME Parc d'activités de Magellan 62 avenue de Magellan – B. P. 182 33607 Pessac Cedex	Tel. +33 5 57 26 39 00 Fax +33 5 57 26 39 09
	Lyon	SEW-USOCOME 75 rue Antoine Condorcet 38090 Vaulx-Milieu	Tel. +33 4 74 99 60 00 Fax +33 4 74 99 60 15
	Nantes	SEW-USOCOME Parc d'activités de la forêt 4 rue des Fontenelles 44140 Le Bignon	Tel. +33 2 40 78 42 00 Fax +33 2 40 78 42 20
	Paris	SEW-USOCOME Zone industrielle 2 rue Denis Papin 77390 Verneuil l'Étang	Tel. +33 1 64 42 40 80 Fax +33 1 64 42 40 88
Technical Offices	Alsace	SEW-USOCOME	Tel. +33 3 89 74 51 62 Fax +33 3 89 76 58 71
	Aquitaine / Charentes	SEW-USOCOME	Tel. +33 5 57 26 39 08 Fax +33 5 57 26 39 09
	Auvergne / Limousin	SEW-USOCOME	Tel. +33 5 55 20 12 10 Fax +33 5 55 20 12 11
	Lower Normandie	SEW-USOCOME	Tel. +33 2 31 37 92 86 Fax +33 2 31 74 68 15
	Brittany	SEW-USOCOME	Tel. +33 2 40 78 42 04 Fax +33 2 40 78 42 20
	Burgundy	SEW-USOCOME	Tel. +33 3 85 49 92 18 Fax +33 3 85 49 92 19
	Centre / Poitou	SEW-USOCOME	Tel. +33 2 40 78 42 11 Fax +33 2 40 78 42 20
	Champagne-Ardenne	SEW-USOCOME	Tel. +33 3 25 79 63 24 Fax +33 3 25 79 63 25
	Franche-Comté	SEW-USOCOME	Tel. +33 3 84 68 57 71 Fax +33 3 84 68 57 95
	Île-de-France East / Aisne	SEW-USOCOME	Tel. +33 3 23 62 81 24 Fax +33 3 23 62 81 44
	Île-de-France North / Picardie	SEW-USOCOME	Tel. +33 1 41 05 92 74 Fax +33 1 41 05 92 75
	Île-de-France South	SEW-USOCOME	Tel. +33 1 60 81 10 56 Fax +33 1 60 81 10 57
	Lorraine / Alsace North	SEW-USOCOME	Tel. +33 3 83 96 28 04 Fax +33 3 83 96 28 07
	Midi-Pyrénées / Roussillon	SEW-USOCOME	Tel. +33 5 61 08 15 85 Fax +33 5 61 08 16 44
	Nord-Pas-de-Calais	SEW-USOCOME	Tel. +33 3 21 10 86 86 Fax +33 3 21 10 86 87

22766650/EN – 03/2017

	Paris / Île-de-France West	SEW-USOCOME	Tel. +33 1 30 90 89 86 Fax +33 1 30 90 93 15
	Pays de la Loire	SEW-USOCOME	Tel. +33 2 40 78 42 03 Fax +33 2 40 78 42 20
	Provence-Alpes-Côte d'Azur	SEW-USOCOME	Tel. +33 4 91 18 00 11 Fax +33 4 91 18 00 12
	Rhône-Alpes East	SEW-USOCOME	Tel. +33 4 75 05 65 95 Fax +33 4 75 05 65 96
	Rhône-Alpes North	SEW-USOCOME	Tel. +33 4 74 99 60 03 Fax +33 4 74 99 60 15
	Rhône-Alpes West	SEW-USOCOME	Tel. +33 4 74 99 60 04 Fax +33 4 74 99 60 15
Gabon			
Sales	Libreville	SEW-EURODRIVE SARL 183, Rue 5.033.C, Lalala à droite P.O. Box 15682 Libreville	Tel. +241 03 28 81 55 +241 06 54 81 33 http://www.sew-eurodrive.cm sew@sew-eurodrive.cm
Germany			
Headquarters Production Sales	Bruchsal	SEW-EURODRIVE GmbH & Co KG Ernst-Blickle-Straße 42 76646 Bruchsal P.O. Box Postfach 3023 – D-76642 Bruchsal	Tel. +49 7251 75-0 Fax +49 7251 75-1970 http://www.sew-eurodrive.de sew@sew-eurodrive.de
Production / Industrial Gears	Bruchsal	SEW-EURODRIVE GmbH & Co KG Christian-Pähr-Str. 10 76646 Bruchsal	Tel. +49 7251 75-0 Fax +49 7251 75-2970
Production	Graben	SEW-EURODRIVE GmbH & Co KG Ernst-Blickle-Straße 1 76676 Graben-Neudorf P.O. Box Postfach 1220 – D-76671 Graben-Neudorf	Tel. +49 7251 75-0 Fax +49 7251-2970
	Östringen	SEW-EURODRIVE GmbH & Co KG, Werk Östringen Franz-Gurk-Straße 2 76684 Östringen	Tel. +49 7253 9254-0 Fax +49 7253 9254-90 oestringen@sew-eurodrive.de
Service Competence Center	Mechanics / Mechatronics	SEW-EURODRIVE GmbH & Co KG Ernst-Blickle-Straße 1 76676 Graben-Neudorf	Tel. +49 7251 75-1710 Fax +49 7251 75-1711 scc-mechanik@sew-eurodrive.de
	Electronics	SEW-EURODRIVE GmbH & Co KG Ernst-Blickle-Straße 42 76646 Bruchsal	Tel. +49 7251 75-1780 Fax +49 7251 75-1769 scc-elektronik@sew-eurodrive.de
Drive Technology Center	North	SEW-EURODRIVE GmbH & Co KG Alte Ricklinger Straße 40-42 30823 Garbsen (Hannover)	Tel. +49 5137 8798-30 Fax +49 5137 8798-55 dtc-nord@sew-eurodrive.de
	East	SEW-EURODRIVE GmbH & Co KG Dänkritzer Weg 1 08393 Meerane (Zwickau)	Tel. +49 3764 7606-0 Fax +49 3764 7606-30 dtc-ost@sew-eurodrive.de
	South	SEW-EURODRIVE GmbH & Co KG Domagkstraße 5 85551 Kirchheim (München)	Tel. +49 89 909552-10 Fax +49 89 909552-50 dtc-sued@sew-eurodrive.de
	West	SEW-EURODRIVE GmbH & Co KG Siemensstraße 1 40764 Langenfeld (Düsseldorf)	Tel. +49 2173 8507-30 Fax +49 2173 8507-55 dtc-west@sew-eurodrive.de
Drive Center	Berlin	SEW-EURODRIVE GmbH & Co KG Alexander-Meißner-Straße 44 12526 Berlin	Tel. +49 306331131-30 Fax +49 306331131-36 dc-berlin@sew-eurodrive.de
	Ludwigshafen	SEW-EURODRIVE GmbH & Co KG c/o BASF SE Gebäude W130 Raum 101 67056 Ludwigshafen	Tel. +49 7251 75 3759 Fax +49 7251 75 503759 dc-ludwigshafen@sew-eurodrive.de
	Saarland	SEW-EURODRIVE GmbH & Co KG Gottlieb-Daimler-Straße 4 66773 Schwalbach Saar – Hülzweiler	Tel. +49 6831 48946 10 Fax +49 6831 48946 13 dc-saarland@sew-eurodrive.de

22766650/EN – 03/2017

Germany			
	Ulm	SEW-EURODRIVE GmbH & Co KG Dieselstraße 18 89160 Dornstadt	Tel. +49 7348 9885-0 Fax +49 7348 9885-90 dc-ulm@sew-eurodrive.de
	Würzburg	SEW-EURODRIVE GmbH & Co KG Nürnbergerstraße 118 97076 Würzburg-Lengfeld	Tel. +49 931 27886-60 Fax +49 931 27886-66 dc-wuerzburg@sew-eurodrive.de
Drive Service Hotline / 24 Hour Service			0 800 SEWHELP 0 800 7394357
Technical Offices	Augsburg	SEW-EURODRIVE GmbH & Co KG August-Wessels-Straße 27 86156 Augsburg	Tel. +49 821 22779-10 Fax +49 821 22779-50 tb-augsburg@sew-eurodrive.de
	Lake Constance	SEW-EURODRIVE GmbH & Co KG Dornierstraße 4 88677 Markdorf	Tel. +49 7544 96590-90 Fax +49 7544 96590-99 tb-bodensee@sew-eurodrive.de
	Bremen	SEW-EURODRIVE GmbH & Co KG Bornstr.19 ... 22 28195 Bremen	Tel. +49 421 33918-10 Fax +49 421 33918-22 tb-bremen@sew-eurodrive.de
	Dortmund	SEW-EURODRIVE GmbH & Co KG Hildastraße 8 44145 Dortmund	Tel. +49 231 229028-10 Fax +49 231 229028-20 tb-dortmund@sew-eurodrive.de
	Dresden	SEW-EURODRIVE GmbH & Co KG Hauptstraße 32 01445 Radebeul	Tel. +49 351 26338-0 Fax +49 351 26338-38 tb-dresden@sew-eurodrive.de
	Erfurt	SEW-EURODRIVE GmbH & Co KG Dubliner Straße 12 99091 Erfurt	Tel. +49 361 21709-70 Fax +49 361 21709-79 tb-erfurt@sew-eurodrive.de
	Güstrow	SEW-EURODRIVE GmbH & Co KG Glasewitzer Chaussee 33 B 18273 Güstrow P.O. Box Postfach 1216 – D-18262 Güstrow	Tel. +49 3843 8557-80 Fax +49 3843 8557-88 tb-guestrow@sew-eurodrive.de
	Hamburg	SEW-EURODRIVE GmbH & Co KG Bramfelder Straße 119 22305 Hamburg	Tel. +49 40 298109-60 Fax +49 40 298109-70 tb-hamburg@sew-eurodrive.de
	Hannover / Garbsen	SEW-EURODRIVE GmbH & Co KG Alte Ricklinger Str.40-42 30823 Garbsen	Tel. +49 5137 8798-10 Fax +49 5137 8798-50 tb-hannover@sew-eurodrive.de
	Heilbronn	SEW-EURODRIVE GmbH & Co KG Zeppelinstraße 7 74357 Bönnigheim	Tel. +49 7143 8738-0 Fax +49 7143 8738-25 tb-heilbronn@sew-eurodrive.de
	Herford	SEW-EURODRIVE GmbH & Co KG Goebenstraße 3 – 7 32052 Herford	Tel. +49 5221 9141-0 Fax +49 5221 9141-20 tb-herford@sew-eurodrive.de
	Karlsruhe	SEW-EURODRIVE GmbH & Co KG Ettlinger Weg 2 76467 Bietigheim P.O. Box Postfach 43 – D-76463 Bietigheim	Tel. +49 7245 9190-10 Fax +49 7245 9190-20 tb-karlsruhe@sew-eurodrive.de
	Kassel	SEW-EURODRIVE GmbH & Co KG Sonnenweg 3 34260 Kaufungen	Tel. +49 561 95144-80 Fax +49 561 95144-90 tb-kassel@sew-eurodrive.de
	Koblenz	SEW-EURODRIVE GmbH & Co KG Bahnstraße 17a 56743 Mendig	Tel. +49 2652 9713-30 Fax +49 2652 9713-40 tb-koblenz@sew-eurodrive.de
	Lahr	SEW-EURODRIVE GmbH & Co KG Europastraße 3/1 77933 Lahr / Schwarzwald	Tel. +49 7821 90999-60 Fax +49 7821 90999-79 tb-lahr@sew-eurodrive.de
	Langenfeld	SEW-EURODRIVE GmbH & Co KG Siemensstraße 1 40764 Langenfeld	Tel. +49 2173 8507-10 Fax +49 2173 8507-50 tb-langenfeld@sew-eurodrive.de
	Magdeburg	SEW-EURODRIVE GmbH & Co KG Breiteweg 53 39179 Barleben	Tel. +49 39203 7577-1 Fax +49 39203 7577-9 tb-magdeburg@sew-eurodrive.de

22766650/EN – 03/2017

	Mannheim	SEW-EURODRIVE GmbH & Co KG Besselstraße 26 68219 Mannheim	Tel. +49 621 71683-10 Fax +49 621 71683-22 tb-mannheim@sew-eurodrive.de
	München	SEW-EURODRIVE GmbH & Co KG Domagkstraße 5 85551 Kirchheim	Tel. +49 89 90955-110 Fax +49 89 90955-150 tb-muenchen@sew-eurodrive.de
	Münster	SEW-EURODRIVE GmbH & Co KG Hafenplatz 4 48155 Münster	Tel. +49 251 41475-11 Fax +49 251 41475-50 tb-muenster@sew-eurodrive.de
	Nuremberg	SEW-EURODRIVE GmbH & Co KG Lina-Ammon-Straße 22 90471 Nürnberg	Tel. +49 911 98884-50 Fax +49 911 98884-60 tb-nuernberg@sew-eurodrive.de
	Regensburg	SEW-EURODRIVE GmbH & Co KG Im Gewerbepark A15 93059 Regensburg	Tel. +49 941 46668-68 Fax +49 941 46668-66 tb-regensburg@sew-eurodrive.de
	Rhine-Main	SEW-EURODRIVE GmbH & Co KG Niederstedter Weg 5 61348 Bad Homburg	Tel. +49 6172 9617-0 Fax +49 6172 9617-50 tb-rheinmain@sew-eurodrive.de
	Stuttgart	SEW-EURODRIVE GmbH & Co KG Friedrich-List-Straße 46 70771 Leinfelden-Echterdingen	Tel. +49 711 16072-0 Fax +49 711 16072-72 tb-stuttgart@sew-eurodrive.de
	Zwickau / Meerane	SEW-EURODRIVE GmbH & Co KG Dänkritzer Weg1 08393 Meerane	Tel. +49 3764 7606-0 Fax +49 3764 7606-20 tb-zwickau@sew-eurodrive.de
Great Britain			
Assembly Sales Service	Normanton	SEW-EURODRIVE Ltd. DeVilliers Way Trident Park Normanton West Yorkshire WF6 1GX	Tel. +44 1924 893-855 Fax +44 1924 893-702 http://www.sew-eurodrive.co.uk info@sew-eurodrive.co.uk
	Drive Service Hotline / 24 Hour Service		Tel. 01924 896911
Service Competence Center	Southern England	SEW-EURODRIVE Ltd. Unit 41 Easter Park Benyon Road Silchester Reading Berkshire RG7 2PQ	Tel. +44 1189 701-699 Fax +44 1189 701-021
Technical Offices	Midlands	SEW-EURODRIVE Ltd. 5 Sugar Brook court Aston Road Bromsgrove Worcs. B60 3EX	Tel. +44 1527 877-319 Fax +44 1527 575-245
	Scotland	SEW-EURODRIVE Ltd. No 37 Enterprise House Springkerse Business Park Stirling FK7 7UF	Tel. +44 17 8647-8730 Fax +44 17 8645-0223
	Northern Ireland	Heyn Engineering (NI) Ltd. 1 Corry Place, Belfast, BT3 9AH	Tel. +44 02890350022 Fax +44 02890350012 http://www.heyn.co.uk info@heyn.co.uk
Greece			
Sales	Athens	Christ. Boznos & Son S.A. 12, K. Mavromichali Street P.O. Box 80136 18545 Piraeus	Tel. +30 2 1042 251-34 Fax +30 2 1042 251-59 http://www.boznos.gr info@boznos.gr
Technical Office	Thessaloniki	Christ. Boznos & Son S.A. Asklipiou 26 562 24 Evosmos, Thessaloniki	Tel. +30 2 310 7054-00 Fax +30 2 310 7055-15 info@boznos.gr

22766650/EN – 03/2017

Hungary			
Sales Service	Budapest	SEW-EURODRIVE Kft. Csillaghegyí út 13. 1037 Budapest	Tel. +36 1 437 06-58 Fax +36 1 437 06-50 http://www.sew-eurodrive.hu office@sew-eurodrive.hu
Iceland			
Sales	Reykjavik	Varma & Vélaverk ehf. Knarrarvogi 4 104 Reykjavík	Tel. +354 585 1070 Fax +354 585)1071 http://www.varmaverk.is vov@vov.is
India			
Registered Office Assembly Sales Service	Vadodara	SEW-EURODRIVE India Private Limited Plot No. 4, GIDC POR Ramangamdi • Vadodara - 391 243 Gujarat	Tel. +91 265 3045200 Fax +91 265 3045300 http://www.seweurodriveindia.com salesvadodara@seweurodriveindia.com
Assembly Sales Service	Chennai	SEW-EURODRIVE India Private Limited Plot No. K3/1, Sipcot Industrial Park Phase II Mambakkam Village Sriperumbudur - 602105 Kancheepuram Dist, Tamil Nadu	Tel. +91 44 37188888 Fax +91 44 37188811 saleschennai@seweurodriveindia.com
	Pune	SEW-EURODRIVE India Private Limited Plant: Plot No. D236/1, Chakan Industrial Area Phase- II, Warale, Tal- Khed, Pune-410501, Maharashtra	Tel. +91 21 35 628700 Fax +91 21 35 628715 salespune@seweurodriveindia.com
Technical Offices	Ahmedabad	SEW-EURODRIVE India Private Limited 306, Shaan office complex, Behind Sakar-IV, Ellisebridge, Ashram Road Ahmedabad – 380006, Gujarat	Tel. +91 79 40072067 / 68 Fax +91 79 40072069 salesahmedabad@seweurodriveindia.com
	Aurangabad	SEW-EURODRIVE India Private Limited Flat.No.403 , Prism Appt. The Venus Housing Society. Beed Bypass Road, Behind Nishant Park Hotel, Aurangabad – 431003, Maharashtra.	Tel. +91 86000 12333 salesaurangabad@seweurodriveindia.com
	Bangalore	SEW-EURODRIVE India Private Limited Sy.no:41-P3, Peenya1, Phase 1A, Peenya Village, Yeswanthapura Hobli, Bangalore North Taluk, Bangalore - 560058, Karnataka	Tel. +91 80 28370664 Fax +91 80 28370665 salesbangalore@seweurodriveindia.com
	Bangalore	SEW-EURODRIVE India Private Limited # C-104, 3rd Block, KSSIDC Complex, Electronic City. Bangalore – 560100, Karnataka	Tel. +91 80 28522662 / 28522663 salesbangalore@seweurodriveindia.com
	Bangladesch	SEW-EURODRIVE India Private Limited Genetic Udayanchal, House-96 (6th Floor), Road-23/A, Block-B, Banani, Dhaka-1213, Bangladesh	Tel. +88 01729 097309 salesdhaka@seweurodrivebangladesh.com
	Bellary	SEW-EURODRIVE India Private Limited Door no-56/279 Ward No-15, Sindhigi compound, Near Raghavendra talkies, Bellary-583101, Karnataka	Tel. +91 77609 88668 salesbellary@seweurodriveindia.com
	Chandigarh	SEW-EURODRIVE India Private Limited #699, Type -3, Power Colony, Chandigarh - Rupnagar Highway Rupnagar - 140001, Punjab	Tel. +91 81462 67606 saleschandigarh@seweurodriveindia.com
	Chennai	SEW-EURODRIVE India Private Limited 2nd Floor, Josmans Complex, No. 5, McNichols Road, Chetpet Chennai - 600031, Tamil Nadu	Tel. +91 44 42849812 / 13 / 14 / 15 Fax +91 44 42849816 saleschennai@seweurodriveindia.com
	Kochi	SEW-EURODRIVE India Private Limited House No: 30/1168 A Kaniyampuzha Road Vyttila Post Office Cochin – 682019, Kerala	Tel. +91 98951 30375 salescochin@seweurodriveindia.com

22766650/EN – 03/2017

Coimbatore	SEW-EURODRIVE India Private Limited 687/2, Sri Sakthivel Towers (Near Deepam Hospital) Trichy Road, Ramanathapuram Coimbatore - 641 045, Tamil Nadu	Tel. +91 422 2322420 Fax +91 422 2323988 salescoimbatore@seweurodriveindia.com
Cuttack	SEW-EURODRIVE India Private Limited Plot No.: F/56, Chandaka Industrial Estate, P.O.- K I I T, Bhubaneswar – 751024. Orissa	Tel. +91 9937446333 salescuttack@seweurodriveindia.com
Faridabad	SEW-EURODRIVE India Private Limited H.No.:-1172 ,Sector-9 , Near St Anthony School Faridabad 121006	Tel. +91 99580 09275 salesfaridabad@seweurodriveindia.com
Gandhidham	SEW-EURODRIVE India Private Limited TCX-S-28, FF, Ward 12/A, Gandhidham - 370201, Kutch - Gujarat	Tel. +91 81282 36850 salesgandhidham@seweurodriveindia.com
Gandhinagar	SEW-EURODRIVE India Private Limited Office No. 304, Siddhraj Zavod, Between Kh-0 & G-0 Circle, Sarkhej Gandhinagar Highway, Sargasan, Gandhinagar – 382423	Tel. +91 787 8601656 salesgandhinagar@seweurodriveindia.com
Gurgaon	SEW-EURODRIVE India Private Limited 136, Hope Appartment, Sec. 15, Part – II, Jharsa Road, Near Reliance Fresh, Gurgaon-122001, Haryana	Tel. +91 99588 78855 salesgurgaon@seweurodriveindia.com
Hyderabad	SEW-EURODRIVE India Private Limited 408, 4th Floor, Meridian Place Green Park Road, Amerpeet Hyderabad - 500016, Telangana	Tel. +91 40 23414698 Fax +91 40 23413884 saleshyderabad@seweurodriveindia.com
Indore	SEW-EURODRIVE India Private Limited 103, Abhishek Avenue, Slide-4, Sch. No. 78, Indore - 452010, Madhya Pradesh	Tel. +91 97524 12068 salesindore@seweurodriveindia.com
Jamshedpur	SEW-EURODRIVE India Private Limited Flat No :- S1 "Kashi Kunj",h. No. 60, New Rani Kudar Road No - 3, P.o. + P.s. - Kadma Jamshedpur - 831005, Jharkhand	Tel. +91 99341 23671 salesjamshedpur@seweurodriveindia.com
Kolhapur	SEW-EURODRIVE India Private Limited C/O. Mr.S.V.Pawar.461/37, Abhideep Residency, Opp-Shriram Petrol Pump, Kasaba Bawada, Kolhapur - 416 122, Maharashtra	Tel. +91 86000 20846 saleskolhapur@seweurodriveindia.com
Kolkata	SEW-EURODRIVE India Private Limited 2nd floor, Room No. 35 Chowringhee Court 55, Chowringhee Road Kolkata - 700 071, West Bengal	Tel. +91 33 22827457 Fax +91 33 22894204 saleskolkata@seweurodriveindia.com
Lucknow	SEW-EURODRIVE India Private Limited 69, Shiv Vihar Colony Vikas Nagar – Sector 5 Lucknow - 226022, Uttar Pradesh	Tel. +91 97936 27333 saleslucknow@seweurodriveindia.com
Mumbai	SEW-EURODRIVE India Private Limited 312 A, 3rd Floor, Acme Plaza, J.B. Nagar, Andheri Kurla Road, Andheri (E) Mumbai - 400059, Maharashtra	Tel. +91 22 28348440 Fax +91 22 28217858 salesmumbai@seweurodriveindia.com
Nagpur	SEW-EURODRIVE India Private Limited Plot No 49, New Kailash Nager, Samta colony, Nagpur-440027, Maharashtra	Tel. +91 95610 89525 salesnagpur@seweurodriveindia.com
Nashik	SEW-EURODRIVE India Private Limited 107, "YOG" Bunglow, Mahatama Nagar, Trimbak Road, Nashik – 422 007, Maharashtra	Tel. +91 96657 52978 salesnashik@seweurodriveindia.com
New Delhi	SEW-EURODRIVE India Private Limited # B-206 DLF Towers-B District Centre Jasola New Delhi -110044	Tel. +91 11 26944551 Fax +91 11 26944467 salesdelhi@seweurodriveindia.com

22766650/EN – 03/2017

	Navi Mumbai	SEW-EURODRIVE India Private Limited No.202, Shivam Yeshoram Plot No. 262/257, Sector 19 Kopar Khairane, Navi Mumbai - 400 709, Maharashtra	Tel. +91 99677 21324 salesmumbai@seweurodriveindia.com
	Pondicherry	SEW-EURODRIVE India Private Limited Plot No 1, Flat No S2, Shubhamangala Apartment, 14th Cross Extension, Krishna Nagar, Pondicherry 605008	Tel. +91 9840971370 salespondicherry@seweurodriveindia.com
	Pune	SEW-EURODRIVE India Private Limited Plot No. 7,"Shri Shantadurga Niwas" Shivaji Co –operative Housing Society Ltd., Behind J.W. Marriot. Off Senapati Bapat Marg. Pune –411 016, Maharashtra	Tel. +91 20 25635466 / 467 salespune@seweurodriveindia.com
	Pune	SEW-EURODRIVE India Private Limited Jai Tulajabhavani Complex. Office No:- 15 First Floor, Opp. Century Enka Company, MIDC Bhosari , Pune 411 026	Tel. +91 20-65118890 / 91 Fax +91 20 25380721 salespune@seweurodriveindia.com
	Raipur	SEW-EURODRIVE India Private Limited A-42, Ashoka Millenium Complex, Ring Road-1, Raipur 492 001 - Chhattisgarh	Tel. +91 771 4090765 Fax +91 771 4090765 salesraipur@seweurodriveindia.com
	Ranchi	SEW-EURODRIVE India Private Limited 1D- Shail Madhuri Apartment, Near Kokar Pool, H.B Road, Kokar Ranchi - 834001, Jharkhand.	Tel. +91 82946 30772 salesranchi@seweurodriveindia.com
	Tiruchirappalli	SEW-EURODRIVE India Private Limited Plot No.24, Door No.64A Rajaram Salai, K.K Nagar Trichy-620 021, Tamilnadu	Tel. +91 97899 79855 salestrichy@seweurodriveindia.com
	Vadodara	SEW-EURODRIVE India Private Limited Unit No. 301, Savorite Bldg, Plot No. 143, Vinayak Society, off old Padra Road, Vadodara - 390 007, Gujarat	Tel. +91 265 2325258 / 6560482 salesvadodara@seweurodriveindia.com
	Vizag	SEW-EURODRIVE India Private Limited D.No.7-13-50/1, Near Padmaja hospital, Ramalayam street, Chittinaidu colony,Old gajuwaka, Visakhapatnam – 530026, Andhra Pradesh	Tel. +91 99895 01748 salesvizag@seweurodriveindia.com
Indonesia			
Sales	Medan	PT. Serumpun Indah Lestari Jl.Pulau Solor no. 8, Kawasan Industri Medan II Medan 20252	Tel. +62 61 687 1221 Fax +62 61 6871429 / +62 61 6871458 / +62 61 30008041 sil@serumpunindah.com serumpunindah@yahoo.com http://www.serumpunindah.com
	Jakarta	PT. Cahaya Sukses Abadi Komplek Rukan Puri Mutiara Blok A no 99, Sunter Jakarta 14350	Tel. +62 21 65310599 Fax +62 21 65310600 csajkt@cbn.net.id
	Jakarta	PT. Agrindo Putra Lestari JL.Pantai Indah Selatan, Komplek Sentra Industri Terpadu, Pantai indah Kapuk Tahap III, Blok E No. 27 Jakarta 14470	Tel. +62 21 2921-8899 Fax +62 21 2921-8988 aplindo@indosat.net.id http://www.aplindo.com
	Surabaya	PT. TRIAGRI JAYA ABADI Jl. Sukosemolo No. 63, Galaxi Bumi Permai G6 No. 11 Surabaya 60111	Tel. +62 31 5990128 Fax +62 31 5962666 sales@triagri.co.id http://www.triagri.co.id
	Surabaya	CV. Multi Mas Jl. Raden Saleh 43A Kav. 18 Surabaya 60174	Tel. +62 31 5458589 Fax +62 31 5317220 sianhwa@sby.centrin.net.id http://www.cvmultimas.com

22766650/EN – 03/2017

Ireland			
Sales Service	Dublin	Alperton Engineering Ltd. 48 Moyle Road Dublin Industrial Estate Glasnevin, Dublin 11	Tel. +353 1 830-6277 Fax +353 1 830-6458 http://www.alperton.ie info@alperton.ie
Israel			
Sales	Tel Aviv	Liraz Handasa Ltd. Ahofer Str 34B / 228 58858 Holon	Tel. +972 3 5599511 Fax +972 3 5599512 http://www.liraz-handasa.co.il office@liraz-handasa.co.il
Italy			
Assembly Sales Service	Milan	SEW-EURODRIVE di R. Blickle & Co.s.a.s. Via Bernini,14 20020 Solaro (Milano)	Tel. +39 02 96 980229 Fax +39 02 96 980 999 http://www.sew-eurodrive.it milano@sew-eurodrive.it
Drive Center	Bologna	SEW-EURODRIVE di R. Blickle & Co.s.a.s. Via della Grafica, 47 40064 Ozzano dell'Emilia (Bo)	Tel. +39 051 65-23-801 Fax +39 02 96 980 499 bologna@sew-eurodrive.it
	Caserta	SEW-EURODRIVE di R. Blickle & Co.s.a.s. Viale Carlo III Km. 23,300 81020 S. Nicola la Strada (Caserta)	Tel. +39 0823 219011 Fax +39 02 96 980 599 caserta@sew-eurodrive.it
	Pescara	SEW-EURODRIVE di R. Blickle & Co.s.a.s. Viale Europa,132 65010 Villa Raspa di Spoltore (PE)	Tel. +39 085 41-59-427 Fax +39 02 96 980 699 pescara@sew-eurodrive.it
	Turin	SEW-EURODRIVE di R. Blickle & Co.s.a.s. Filiale Torino c.so Unione Sovietica 612/15 - int. C 10135 Torino	Tel. +39 011 3473780 Fax +39 02 96 980 799 torino@sew-eurodrive.it
	Verona	SEW-EURODRIVE di R. Blickle & Co.s.a.s. Via Antonio Meucci, 5 37042 - Caldiero (VR)	Tel. +39 045 89-239-11 Fax +39 02 96 980 814 verona@sew-eurodrive.it
Ivory Coast			
Sales	Abidjan	SEW-EURODRIVE SARL Ivory Coast Rue des Pêcheurs, Zone 3 26 BP 916 Abidjan 26	Tel. +225 21 21 81 05 Fax +225 21 25 30 47 info@sew-eurodrive.ci http://www.sew-eurodrive.ci
Japan			
Assembly Sales Service	Iwata	SEW-EURODRIVE JAPAN CO., LTD 250-1, Shimoman-no, Iwata Shizuoka 438-0818	Tel. +81 538 373811 Fax +81 538 373814 http://www.sew-eurodrive.co.jp sewjapan@sew-eurodrive.co.jp hamamatsu@sew-eurodrive.co.jp
Technical Offices	Fukuoka	SEW-EURODRIVE JAPAN CO., LTD C-go, 5th-floor, Yakuin-Hiruzu-Bldg. 1-5-11, Yakuin, Chuo-ku Fukuoka, 810-0022	Tel. +81 92 713-6955 Fax +81 92 713-6860 fukuoka@sew-eurodrive.co.jp
	Kyoto	SEW-EURODRIVE JAPAN CO., LTD Kyoto Operation Center 9-1-11 Seikadai, Seika-cho, Souraku-gun, Kyoto 619-0238	Tel. +81 774 98-2750 Fax +81 774 93-2100 sewjapan@sew-eurodrive.co.jp
	Osaka	SEW-EURODRIVE JAPAN CO., LTD Higobashi Shimizu Bldg. 10th flor 1-3-7 Tosabori, Nishi-ku Osaka, 550-0001	Tel. +81 6 6444--8330 Fax +81 6 6444--8338 osaka@sew-eurodrive.co.jp
	Tokio	SEW-EURODRIVE JAPAN CO., LTD Renai Partire Shiodome 5th floor 2-18-3 Higashi-Shinbashi, Minato-Ku, Tokyo 105-0021	Tel. +81 3 3239-0469 Fax +81 3 3239-0943 tokyo@sew-eurodrive.co.jp
Kazakhstan			
Sales	Almaty	SEW-EURODRIVE LLP 291-291A, Tole bi street 050031, Almaty	Tel. +7 (727) 350 5156 Fax +7 (727) 350 5156 http://www.sew-eurodrive.kz sew@sew-eurodrive.kz

22766650/EN – 03/2017

	Tashkent	SEW-EURODRIVE LLP Representative office in Uzbekistan 96A, Sharaf Rashidov street, Tashkent, 100084	Tel. +998 71 2359411 Fax +998 71 2359412 http://www.sew-eurodrive.uz sew@sew-eurodrive.uz
	Ulaanbaatar	IM Trading LLC Narny zam street 62 Sukhbaatar district, Ulaanbaatar 14230	Tel. +976-77109997 Fax +976-77109997 imt@imt.mn
Technical Offices	Karagandy	SEW-EURODRIVE LLP 82, Molokov Street 100004, Karagandy	Tel. +7 (7212) 955 956 Fax +7 (7212) 955 956 karagandy@sew-eurodrive.kz
	Oskemen	SEW-EURODRIVE LLP 181/3, Abai avenue, 070005, Oskemen	Tel. +7 (7212) 913 748 Fax +7 (7212) 913 748 oskemen@sew-eurodrive.kz
Kenya			
Sales	Nairobi	SEW-EURODRIVE Pty Ltd Transnational Plaza, 5th Floor Mama Ngina Street P.O. Box 8998-00100 Nairobi	Tel. +254 791 398840 http://www.sew-eurodrive.co.tz info@sew.co.tz
Latvia			
Sales	Riga	SIA Alas-Kuul Katlakalna 11C 1073 Riga	Tel. +371 6 7139253 Fax +371 6 7139386 http://www.alas-kuul.lv info@alas-kuul.com
Lebanon			
Sales (Lebanon)	Beirut	Gabriel Acar & Fils sarl B. P. 80484 Bourj Hammoud, Beirut	Tel. +961 1 510 532 Fax +961 1 494 971 ssacar@inco.com.lb
Sales (Jordan, Kuwait , Saudi Arabia, Syria)	Beirut	Middle East Drives S.A.L. (offshore) Sin El Fil. B. P. 55-378 Beirut	Tel. +961 1 494 786 Fax +961 1 494 971 http://www.medrives.com info@medrives.com
Lithuania			
Sales	Alytus	UAB Irseva Statybininku 106C 63431 Alytus	Tel. +370 315 79204 Fax +370 315 56175 http://www.irseva.lt irmantas@irseva.lt
Luxembourg			
representation: Belgium			
Macedonia			
Sales	Skopje	Boznos DOOEL Dime Anicin 2A/7A 1000 Skopje	Tel. +389 23256553 Fax +389 23256554 http://www.boznos.mk
Malaysia			
Assembly Sales Service	Johor	SEW-EURODRIVE SDN BHD No. 95, Jalan Seroja 39, Taman Johor Jaya 81000 Johor Bahru, Johor West Malaysia	Tel. +60 7 3549409 Fax +60 7 3541404 sales@sew-eurodrive.com.my
Technical Offices	Kuala Lumpur	SEW-EURODRIVE SDN BHD No. 2, Jalan Anggerik Mokara 31/46 Kota Kemuning Seksyen 31 40460 Shah Alam Selangor Darul Ehsan West Malaysia	Tel. +60 3 51229633 Fax +60 3 51229622 sewsa@sew-eurodrive.com.my
	Penang	SEW-EURODRIVE SDN BHD No. 38, Jalan Bawal Kimsar Garden 13700 Prai, Penang West Malaysia	Tel. +60 4 3999349 Fax +60 4 3999348 sewpg@sew-eurodrive.com.my

22766650/EN – 03/2017

	Kuching	SEW-EURODRIVE SDN BHD No. 69, Lot 10899 1st Floor, Jalan Tun Jugah 93350 Kuching Sarawak East Malaysia	Tel. +60 82 572780 Fax +60 82 571780 sewswk@sew-eurodrive.com.my
	Kota Kinabalu	SEW-EURODRIVE SDN BHD East Malaysia	Tel. +60 19 7539395 sales@sew-eurodrive.com.my
	Ipoh	SEW-EURODRIVE SDN BHD West Malaysia	Tel. +60 19 7177366 sewsa@sew-eurodrive.com.my
Mexiko			
Assembly Sales Service	Quéretaro	SEW-EURODRIVE MEXICO S.A. de C.V. SEM-981118-M93 Tequisquiapan No. 102 Parque Industrial Quéretaro C.P. 76220 Querétaro, México	Tel. +52 442 1030-300 Fax +52 442 1030-301 http://www.sew-eurodrive.com.mx scmexico@seweurodrive.com.mx
Sales Service	Puebla	SEW-EURODRIVE MEXICO S.A. de C.V. Calzada Zavaleta No. 3922 Piso 2 Local 6 Col. Santa Cruz Buenavista C.P. 72154 Puebla, México	Tel. +52 (222) 221 248 http://www.sew-eurodrive.com.mx scmexico@seweurodrive.com.mx
Mongolia			
Technical Office	Ulaanbaatar	IM Trading LLC Narny zam street 62 Union building, Suite A-403-1 Sukhbaatar district, Ulaanbaatar 14230	Tel. +976-77109997 Tel. +976-99070395 Fax +976-77109997 http://imt.mn/ imt@imt.mn
Morocco			
Sales Service	Bouskoura	SEW-EURODRIVE Morocco Parc Industriel CFCIM, Lot 55 and 59 Bouskoura	Tel. +212 522 88 85 00 Fax +212 522 88 84 50 http://www.sew-eurodrive.ma sew@sew-eurodrive.ma
Namibia			
Sales	Swakopmund	DB Mining & Industrial Services Einstein Street Strauss Industrial Park Unit1 Swakopmund	Tel. +264 64 462 738 Fax +264 64 462 734 anton@dbminingnam.com
Netherlands			
Assembly Sales Service	Rotterdam	SEW-EURODRIVE B.V. Industrieweg 175 3044 AS Rotterdam Postbus 10085 3004 AB Rotterdam	Tel. +31 10 4463-700 Fax +31 10 4155-552 Service: 0800-SEWHELP http://www.sew-eurodrive.nl info@sew-eurodrive.nl
New Zealand			
Assembly Sales Service	Auckland	SEW-EURODRIVE NEW ZEALAND LTD. P.O. Box 58-428 82 Greenmount drive East Tamaki Auckland	Tel. +64 9 2745627 Fax +64 9 2740165 http://www.sew-eurodrive.co.nz sales@sew-eurodrive.co.nz
	Christchurch	SEW-EURODRIVE NEW ZEALAND LTD. 30 Lodestar Avenue, Wigram Christchurch	Tel. +64 3 384-6251 Fax +64 3 384-6455 sales@sew-eurodrive.co.nz
Technical Office	Palmerston North	SEW-EURODRIVE NEW ZEALAND LTD. C/-Grant Shearman, RD 5, Aronui Road Palmerston North	Tel. +64 6 355-2165 Fax +64 6 355-2316 sales@sew-eurodrive.co.nz
Nigeria			
Sales	Lagos	Greenpeg Nig. Ltd Plot 296A, Adeyemo Akapo Str. Omole GRA Ikeja Lagos-Nigeria	Tel. +234-701-821-9200-1 http://www.greenpegltd.com bolaji.adekunle@greenpegltd.com

22766650/EN – 03/2017

Norway			
Assembly Sales Service	Moss	SEW-EURODRIVE A/S Solgaard skog 71 1599 Moss	Tel. +47 69 24 10 20 Fax +47 69 24 10 40 http://www.sew-eurodrive.no sew@sew-eurodrive.no
Pakistan			
Sales	Karachi	Industrial Power Drives Al-Fatah Chamber A/3, 1st Floor Central Commercial Area, Sultan Ahmed Shah Road, Block 7/8, Karachi	Tel. +92 21 452 9369 Fax +92-21-454 7365 seweurodrive@cyber.net.pk
Paraguay			
Sales	Fernando de la Mora	SEW-EURODRIVE PARAGUAY S.R.L De la Victoria 112, Esquina nueva Asunción Departamento Central Fernando de la Mora, Barrio Bernardino	Tel. +595 991 519695 Fax +595 21 3285539 sewpy@sew-eurodrive.com.py
Peru			
Assembly Sales Service	Lima	SEW EURODRIVE DEL PERU S.A.C. Los Calderos, 120-124 Urbanizacion Industrial Vulcano, ATE, Lima	Tel. +51 1 3495280 Fax +51 1 3493002 http://www.sew-eurodrive.com.pe sewperu@sew-eurodrive.com.pe
Philippines			
Sales	Makati	P.T. Cerna Corporation 4137 Ponte St., Brgy. Sta. Cruz Makati City 1205	Tel. +63 2 519 6214 Fax +63 2 890 2802 mech_drive_sys@ptcerna.com http://www.ptcerna.com
Poland			
Assembly Sales Service	Łódź	SEW-EURODRIVE Polska Sp.z.o.o. ul. Techniczna 5 92-518 Łódź	Tel. +48 42 293 00 00 Fax +48 42 293 00 49 http://www.sew-eurodrive.pl sew@sew-eurodrive.pl
	Service	Tel. +48 42 293 0030 Fax +48 42 293 0043	24 Hour Service Tel. +48 602 739 739 (+48 602 SEW SEW) serwis@sew-eurodrive.pl
Technical Offices	Tychy	SEW-EURODRIVE Polska Sp.z.o.o. ul. Strzelecka 66 43-109 Tychy	Tel. +48 32 32 32 610 Fax +48 32 32 32 648
	Bydgoszcz	SEW-EURODRIVE Polska Sp.z.o.o. ul. Fordońska 246 85-766 Bydgoszcz	Tel.+48 52 567 30 00 Fax +48 52 567 30 09
	Gdansk	SEW-EURODRIVE Polska Sp.z.o.o. ul. Galaktyczna 30A 80-299 Gdańsk	Tel. +48 58 762 70 00 Fax +48 58 762 70 09
	Posen	SEW-EURODRIVE Polska Sp.z.o.o. ul. Wschodnia 7B 62-080 Swadzim k. Poznania	Tel. +48 61 6465500 Fax +48 61 6465519
	Radom	SEW-EURODRIVE Polska Sp.z.o.o. ul. Słowackiego 84 26-600 Radom	Tel. +48 48 679 47 00 Fax +48 48 679 47 09
	Rzeszów	SEW-EURODRIVE Polska Sp.z.o.o. ul. Armii Krajowej 80 35-307 Rzeszów	Tel. +48 17 784 27 00 Fax +48 17 784 27 09
Portugal			
Assembly Sales Service	Coimbra	SEW-EURODRIVE, LDA. Av. da Fonte Nova, n.º 86 3050-379 Mealhada	Tel. +351 231 20 9670 Fax +351 231 20 3685 http://www.sew-eurodrive.pt infosew@sew-eurodrive.pt
Service Competence Center	Lisbon	SEW-EURODRIVE, LDA. Núcleo Empresarial I de São Julião do Tojal Rua de Entremuros, 54 Fracção I 2660-533 São Julião do Tojal	Tel. +351 21 958-0198 / +351 939 598 717 Fax +351 21 958-0245 esc.lisboa@sew-eurodrive.pt

22766650/EN – 03/2017

Technical Office	Porto	SEW-EURODRIVE, LDA. Rua Monte da Bela, N.º 191, Fração X 4445-294 Ermesinde	Tel. +351 229 350 383 / +351 932 559 110 Fax +351 229 350 384 esc.porto@sew-eurodrive.pt
Romania			
Sales Service	Bucharest	Sialco Trading SRL str. Brazilia nr. 36 011783 Bucuresti	Tel. +40 21 230-1328 Fax +40 21 230-7170 sialco@sialco.ro
Russia			
Assembly Sales Service	St. Petersburg	ЗАО «СЕВ-ЕВРОДРАЙФ» a. я. 36 195220 Санкт-Петербург	Tel. +7 812 3332522 / +7 812 5357142 Fax +7 812 3332523 http://www.sew-eurodrive.ru sew@sew-eurodrive.ru
Technical Offices	Ekaterinburg	ЗАО «СЕВ-ЕВРОДРАЙФ» Kominterna Str. 16 Office 614 620078 Ekaterinburg	Tel. +7 343 310 3977 Fax +7 343 310 3978 eso@sew-eurodrive.ru
	Irkutsk	ЗАО «СЕВ-ЕВРОДРАЙФ» 5-Armii Str., 31 664011 Irkutsk	Tel. +7 3952 25 5880 Fax +7 3952 25 5881 iso@sew-eurodrive.ru
	Moscow	ЗАО «СЕВ-ЕВРОДРАЙФ» Malaja Semjonowskaja Str. д. 9, корпус 2 107023 Moskau	Tel. +7 495 9337090 Fax +7 495 9337094 mso@sew-eurodrive.ru
	Novosibirsk	ЗАО «СЕВ-ЕВРОДРАЙФ» pr. K Marksa 30 630087 Novosibirsk	Tel. +7 383 3350200 Fax +7 383 3462544 nso@sew-eurodrive.ru
	Perm	ЗАО «СЕВ-ЕВРОДРАЙФ» Stakhanovskaya str., 45 Office 512 614066 Perm	Tel. +7 342 2219494 Fax +7 342 2219444 pso@sew-eurodrive.ru
	Togliatti	ЗАО «СЕВ-ЕВРОДРАЙФ» Sportivnaya Str. 4B, office 2 Samarskaya obl. 445057 Togliatti	Tel. +7 8482 710529 Fax +7 8482 810590 tso@sew-eurodrive.ru
Sambia			
representation: South Africa			
Senegal			
Sales	Dakar	SENEMECA Mécanique Générale Km 8, Route de Rufisque B.P. 3251, Dakar	Tel. +221 338 494 770 Fax +221 338 494 771 http://www.senemeca.com senemeca@senemeca.sn
Serbia			
Sales	Belgrade	DIPAR d.o.o. Ustanicka 128a PC Košum, IV floor 11000 Beograd	Tel. +381 11 347 3244 / +381 11 288 0393 Fax +381 11 347 1337 office@dipar.rs
Singapore			
Assembly Sales Service	Singapore	SEW-EURODRIVE PTE. LTD. No 9, Tuas Drive 2 Jurong Industrial Estate Singapore 638644	Tel. +65 68621701 Fax +65 68612827 http://www.sew-eurodrive.com.sg sewsingapore@sew-eurodrive.com
Slovakia			
Sales	Bratislava	SEW-Eurodrive SK s.r.o. Rybničná 40 831 06 Bratislava	Tel.+421 2 33595 202, 217, 201 Fax +421 2 33595 200 http://www.sew-eurodrive.sk sew@sew-eurodrive.sk
	Košice	SEW-Eurodrive SK s.r.o. Slovenská ulica 26 040 01 Košice	Tel. +421 55 671 2245 Fax +421 55 671 2254 Mobile +421 907 671 976 sew@sew-eurodrive.sk

22766650/EN – 03/2017

Slovenia			
Sales Service	Celje	Pakman - Pogonska Tehnika d.o.o. Ul. XIV. divizije 14 3000 Celje	Tel. +386 3 490 83-20 Fax +386 3 490 83-21 pakman@siol.net
South Africa			
Assembly Sales Service	Johannesburg	SEW-EURODRIVE (PROPRIETARY) LIMITED Eurodrive House Cnr. Adcock Ingram and Aerodrome Roads Aeroton Ext. 2 Johannesburg 2013 P.O.Box 90004 Bertsham 2013	Tel. +27 11 248-7000 Fax +27 11 248-7289 http://www.sew.co.za info@sew.co.za
	Cape Town	SEW-EURODRIVE (PROPRIETARY) LIMITED Rainbow Park Cnr. Racecourse & Omuramba Road Montague Gardens Cape Town P.O.Box 36556 Chempet 7442	Tel. +27 21 552-9820 Fax +27 21 552-9830 Telex 576 062 bgriffiths@sew.co.za
	Durban	SEW-EURODRIVE (PROPRIETARY) LIMITED 48 Prospecton Road Isipingo Durban P.O. Box 10433, Ashwood 3605	Tel. +27 31 902 3815 Fax +27 31 902 3826 cdejager@sew.co.za
	Nelspruit	SEW-EURODRIVE (PROPRIETARY) LIMITED 7 Christie Crescent Vintonia P.O.Box 1942 Nelspruit 1200	Tel. +27 13 752-8007 Fax +27 13 752-8008 robermeyer@sew.co.za
Technical Office	Port Elizabeth	SEW-EURODRIVE (PROPRIETARY) LIMITED 8 Ruan Access Park Old Cape Road Greenbushes 6000 Port Elizabeth	Tel. +27 41 3722246 Fax +27 41 3722247 http://www.sew.co.za fsieberhagen@sew-co-za
South Korea			
Assembly Sales Service	Ansan	SEW-EURODRIVE KOREA CO., LTD. 7, Dangjaengi-ro, Danwon-gu, Ansan-si, Gyeonggi-do, Zip 425-839	Tel. +82 31 492-8051 Fax +82 31 492-8056 http://www.sew-eurodrive.kr master.korea@sew-eurodrive.com
	Busan	SEW-EURODRIVE KOREA CO., LTD. 28, Noksansandan 262-ro 50beon-gil, Gangseo-gu, Busan, Zip 618-820	Tel. +82 51 832-0204 Fax +82 51 832-0230
Technical Offices	Daegu	SEW-EURODRIVE KOREA CO., LTD. No.303 Sungan officetel, 1834, Dalgubeol-daero, Dalseo-gu, Daegu, Zip 704-712	Tel. +82 53 650-7111 Fax +82 53 650-7112
	Daejeon	SEW-EURODRIVE KOREA CO., LTD. No.302 Hongin officetel, 28, Daehak-ro, Yuseong-gu, Daejeon, Zip 305-710	Tel. +82 42 828-6461 Fax +82 42 828-6463
	Gwangju	SEW-EURODRIVE KOREA CO., LTD. 5fl., Hyundai B/D B, 40, Bungmun-daero, Buk-gu, Gwangju, Zip 500-855	Tel. +82 62 511-9172 Fax +82 62 511-9174
	Seoul	SEW-EURODRIVE KOREA CO., LTD. No.1804 Ace Hiend Tower 8th, 84, Gasan digital 1-ro, Geumcheon-gu, Seoul, Zip 153-797	Tel. +82 2 862-8051 Fax +82 2 862-8199
Spain			
Assembly Sales Service	Bilbao	SEW-EURODRIVE ESPAÑA, S.L. Parque Tecnológico, Edificio, 302 48170 Zamudio (Vizcaya)	Tel. +34 94 43184-70 Fax +34 94 43184-71 http://www.sew-eurodrive.es sew.spain@sew-eurodrive.es

22766650/EN – 03/2017

Technical Offices	Barcelona	SEW-EURODRIVE ESPAÑA, S.L. Avda. Francesc Macià, 60 – Planta 16, porta 1 Eix Macià – "Torre Milenium" 08208 Sabadell (Barcelona)	Tel. +34 93 7162200 Fax +34 93 7233007
	Madrid	SEW-EURODRIVE ESPAÑA, S.L. Gran Via. 48-2° A-D 28220 Majadahonda (Madrid)	Tel. +34 91 6342250 Fax +34 91 6340899
	Seville	MEB Pol. Ind. Calonge, C/ Metalurgia Nº-71. 41007 Sevilla	Tel. +34 954 356 361 Fax +34 954 356 274 mebsa.sevilla@mebsa.com
	Valencia	MEB Músico Andreu i Piqueres, 4 46.900 Torrente (Valencia)	Tel. +34 961 565 493 Fax +34 961 566 688 mebsa.valencia@mebsa.com
Sri Lanka			
Sales	Colombo	SM International (Pte) Ltd 254, Galle Raod Colombo 4, Sri Lanka	Tel. +94 1 2584887 Fax +94 1 2582981
Swaziland			
Sales	Manzini	C G Trading Co. (Pty) Ltd PO Box 2960 Manzini M200	Tel. +268 2 518 6343 Fax +268 2 518 5033 engineering@cgtrading.co.sz
Sweden			
Assembly Sales Service	Jönköping	SEW-EURODRIVE AB Gnejsvägen 6-8 553 03 Jönköping Box 3100 S-550 03 Jönköping	Tel. +46 36 34 42 00 Fax +46 36 34 42 80 http://www.sew-eurodrive.se jonkoping@sew.se
Sales	Gothemburg	SEW-EURODRIVE AB Gustaf Werners gata 8 421 32 Västra Frölunda	Tel. +46 31 709 68 80 Fax +46 31 709 68 93 goteborg@sew.se
	Stockholm	SEW-EURODRIVE AB Björkholmsvägen 10 141 46 Huddinge	Tel. +46 8 449 86 80 Fax +46 8 449 86 93 stockholm@sew.se
	Malmö	SEW-EURODRIVE AB Borrgatan 5 211 24 Malmö	Tel. +46 40 680 64 80 Fax +46 40 680 64 93 malmo@sew.se
	Skellefteå	SEW-EURODRIVE AB Trädgårdsgatan 8 931 31 Skellefteå	Tel. +46 910 71 53 80 Fax +46 910 71 53 93 skelleftea@sew.se
Switzerland			
Assembly Sales Service	Basel	Alfred Imhof A.G. Jurastrasse 10 4142 Münchenstein bei Basel	Tel. +41 61 417 1717 Fax +41 61 417 1700 http://www.imhof-sew.ch info@imhof-sew.ch
Technical Offices	Rhaetian Switzerland	Patrice Salvi Rue des Ormes 10 2300 La Chaux-de-Fonds	Tel. +41 61 417 17 81 Fax +41 61 417 17 00
	Bern / Solothurn	Rudolf Bühler Muntersweg 5 2540 Grenchen	Tel. +41 32 652 2339 Fax +41 32 652 2331
	Central Switzerland, Aargau	Armin Pfister Stierenweid 4950 Huttwil, BE	Tel. +41 62 962 54 55 Fax +41 62 962 54 56
	Zürich, Ticino	Gian-Michele Muletta Fischerstrasse 61 8132 Egg bei Zürich	Tel. +41 44 994 81 15 Fax +41 44 994 81 16
	Lake Constance and East Switzerland	Markus Künzle Eichweg 4 9403 Goldach	Tel. +41 71 845 2808 Fax +41 71 845 2809

22766650/EN – 03/2017

Taiwan			
Sales	Taipei	Ting Shou Trading Co., Ltd. 6F-3, No. 267, Sec. 2 Tung Huw S. Road Taipei	Tel. +886 2 27383535 Fax +886 2 27368268 Telex 27 245 sewtwn@ms63.hinet.net http://www.tingshou.com.tw
	Nan Tou	Ting Shou Trading Co., Ltd. No. 55 Kung Yeh N. Road Industrial District Nan Tou 540	Tel. +886 49 255353 Fax +886 49 257878 sewtwn@ms63.hinet.net http://www.tingshou.com.tw
Tanzania			
Sales	Daressalam	SEW-EURODRIVE PTY LIMITED TANZANIA Plot 52, Regent Estate PO Box 106274 Dar Es Salaam	Tel. +255 0 22 277 5780 Fax +255 0 22 277 5788 http://www.sew-eurodrive.co.tz info@sew.co.tz
Thailand			
Assembly Sales Service	Chonburi	SEW-EURODRIVE (Thailand) Ltd. 700/456, Moo.7, Donhuaroh Muang Chonburi 20000	Tel. +66 38 454281 Fax +66 38 454288 sewthailand@sew-eurodrive.com
Technical Offices	Bangkok	SEW-EURODRIVE (Thailand) Ltd. 6th floor, TPS Building 1023, Phattanakarn Road Suanluang Bangkok,10250	Tel. +66 2 7178149 Fax +66 2 7178152 sewthailand@sew-eurodrive.com
	Hat Yai	SEW-EURODRIVE (Thailand) Ltd. Hadyai Country Home Condominium 59/101 Soi.17/1 Rachas-Utid Road. Hadyai, Songkhla 90110	Tel. +66 74 359441 Fax +66 74 359442 sewthailand@sew-eurodrive.com
	Khon Kaen	SEW-EURODRIVE (Thailand) Ltd. 4th Floor, Kaow-U-HA MOTOR Bldg, 359/2, Mitraphab Road. Muang District Khonkaen 40000	Tel. +66 43 225745 Fax +66 43 324871 sewthailand@sew-eurodrive.com
Tunisia			
Sales	Tunis	T. M.S. Technic Marketing Service Zone Industrielle Mghira 2 Lot No. 39 2082 Fouchana	Tel. +216 79 40 88 77 Fax +216 79 40 88 66 http://www.tms.com.tn tms@tms.com.tn
Turkey			
Assembly Sales Service	Kocaeli-Gebze	SEW-EURODRİVE Hareket Sistemleri San. Ve TIC. Ltd. Sti Gebze Organize Sanayi Böl. 400 Sok No. 401 41480 Gebze Kocaeli	Tel. +90 262 9991000 04 Fax +90 262 9991009 http://www.sew-eurodrive.com.tr sew@sew-eurodrive.com.tr
Technical Offices	Adana	SEW-EURODRİVE Hareket	Tel. +90 533 491 81 77 / +90 542 660 34 89 Fax +90 262 999 10 09
	Ankara	SEW-EURODRİVE Hareket Sistemleri San. Ve TIC. Ltd. Sti 1368.Cadde Eminel İşmerkezi No: 18/68 İvogsan / Ankara	Tel. +90 312 385 33 90 Fax +90 312 385 32 58
	Bursa	SEW-EURODRİVE Hareket Sistemleri San. Ve TIC. Ltd. Sti Üçevler Mah. Bayraktepe Sok. Akay İş Merkezi Kat:3 No: 7/6 Nilüfer / Bursa	Tel. +90 224 443 45 60 Fax +90 224 443 45 58
	Istanbul	SEW-EURODRİVE Hareket Sistemleri San. Ve TIC. Ltd. Sti Tekstilkent Ticaret Merkezi B-13 Blok No:70 Esenler / İstanbul	Tel. +90 262 9991000 04 Fax +90 262 9991009

22766650/EN – 03/2017

	Izmir	SEW-EURODRİVE Hareket IAOSB Küçük Parseller Grubu Sosyal Tesis merkezi merkezi 10030 sokak No: 16 / 110 Kara Hasan Atlı İş Merkezi Kat :6 Çigli / İzmir	Tel. +90 232 469 62 64 Fax +90 232 433 61 05
Ukraine			
Assembly Sales Service	Dnipropetrovsk	ООО «СЕВ-Евродрайв» ул. Рабочая, 23-В, офис 409 49008 Днепропетровск	Tel. +380 56 370 3211 Fax +380 56 372 2078 http://www.sew-eurodrive.ua sew@sew-eurodrive.ua
Sales	Kiev	ООО «СЕВ-Евродрайв» ул. С.Олейника, 21 02068 Киев	Tel. +380 44 503 95 77 Fax +380 44 503 95 78 kso@sew-eurodrive.ua
	Ivano-Frankivsk	ООО «СЕВ-Евродрайв» ул. Независимости, 4, оф.303 76000 Ивано-Франковск	Tel. +380 342 725 190 Fax +380 342 725 191 ifso@sew-eurodrive.ua
Uruguay			
Assembly Sales	Montevideo	SEW-EURODRIVE Uruguay, S. A. Jose Serrato 3569 Esqina Corumbe CP 12000 Montevideo	Tel. +598 2 21181-89 Fax +598 2 21181-90 sewuy@sew-eurodrive.com.uy
USA			
Production Assembly Sales Service	Southeast Region	SEW-EURODRIVE INC. 1295 Old Spartanburg Highway P.O. Box 518 Lyman, S.C. 29365	Tel. +1 864 439-7537 Fax Sales +1 864 439-7830 Fax Production +1 864 439-9948 Fax Assembly +1 864 439-0566 Fax Confidential/HR +1 864 949-5557 http://www.seweurodrive.com cslyman@seweurodrive.com
Assembly Sales Service	Northeast Region	SEW-EURODRIVE INC. Pureland Ind. Complex 2107 High Hill Road, P.O. Box 481 Bridgeport, New Jersey 08014	Tel. +1 856 467-2277 Fax +1 856 845-3179 csbridgeport@seweurodrive.com
	Midwest Region	SEW-EURODRIVE INC. 2001 West Main Street Troy, Ohio 45373	Tel. +1 937 335-0036 Fax +1 937 332-0038 cstroy@seweurodrive.com
	Southwest Region	SEW-EURODRIVE INC. 3950 Platinum Way Dallas, Texas 75237	Tel. +1 214 330-4824 Fax +1 214 330-4724 csdallas@seweurodrive.com
	Western Region	SEW-EURODRIVE INC. 30599 San Antonio St. Hayward, CA 94544	Tel. +1 510 487-3560 Fax +1 510 487-6433 cshayward@seweurodrive.com
	Wellford	SEW-EURODRIVE INC. 148/150 Finch Rd. Wellford, S.C. 29385	IGLogistics@seweurodrive.com
	Additional addresses for service provided on request!		
Uzbekistan			
Technical Office	Tashkent	SEW-EURODRIVE LLP Representative office in Uzbekistan 96A, Sharaf Rashidov street, Tashkent, 100084	Tel. +998 71 2359411 Fax +998 71 2359412 http://www.sew-eurodrive.uz sew@sew-eurodrive.uz
Vietnam			
Sales	Ho Chi Minh City	Nam Trung Co., Ltd Huế - South Vietnam / Construction Materials 250 Binh Duong Avenue, Thu Dau Mot Town, Binh Duong Province HCM office: 91 Tran Minh Quyen Street District 10, Ho Chi Minh City	Tel. +84 8 8301026 Fax +84 8 8392223 khanh-nguyen@namtrung.com.vn http://www.namtrung.com.vn
	Hanoi	MICO LTD Quảng Trị - North Vietnam / All sectors except Construction Materials 8th Floor, Ocean Park Building, 01 Dao Duy Anh St, Ha Noi, Viet Nam	Tel. +84 4 39386666 Fax +84 4 3938 6888 nam_ph@micogroup.com.vn http://www.micogroup.com.vn

22766650/EN – 03/2017

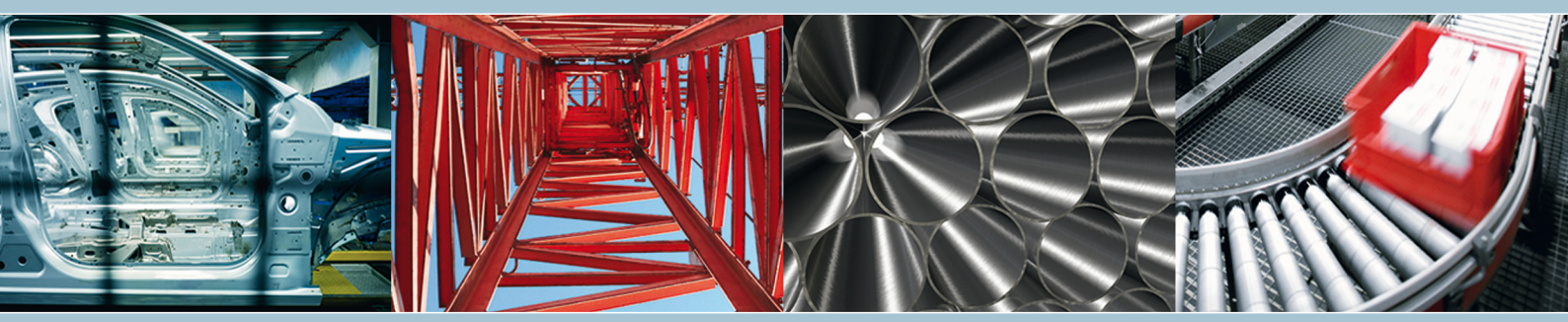



SEW-EURODRIVE
Driving the world

SEW-EURODRIVE GmbH & Co KG
P.O. Box 3023
76642 BRUCHSAL
GERMANY
Phone +49 7251 75-0
Fax +49 7251 75-1970
sew@sew-eurodrive.com
→ www.sew-eurodrive.com