# Technical Information
# **Proline Promag 50W, 53W**
Electromagnetic flowmeter



## Flow measurement of liquids in water or wastewater applications

**Application**

Electromagnetic flowmeter for bidirectional measurement of liquids with a minimum conductivity of ≥ 5 µS/cm:
- Drinking water
- Wastewater
- Sewage sludge

- Flow measurement up to 110000 m³/h (484315 gal/min)
- Fluid temperature up to +80 °C (+176 °F)
- Process pressures up to 40 bar (580 psi)
- Lengths in accordance with DVGW/ISO

Application-specific lining of the measuring pipe from polyurethane or hard rubber with the following drinking water permissions:
- KTW
- WRAS
- NSF
- ACS

Approvals for hazardous area:
- ATEX
- IECEx
- FM
- CSA
- NEPSI

Connection to process control system:
- HART
- PROFIBUS DP/PA
- FOUNDATION Fieldbus
- Modbus RS485

**Your benefits**

Promag measuring devices offer you cost-effective flow measurement with a high degree of accuracy for a wide range of process conditions.

The uniform Proline transmitter concept comprises:
- Modular device and operating concept resulting in a higher degree of efficiency
- Software options for batching, electrode cleaning and for measuring pulsating flow
- High degree of reliability and measuring stability
- Uniform operating concept

The tried-and-tested Promag sensors offer:
- No pressure loss
- Not sensitive to vibrations
- Simple installation and commissioning

Endress+Hauser
People for Process Automation

# Table of contents


**Function and system design ... 3**
Measuring principle ... 3
Measuring system ... 3

**Input ... 4**
Measured variable ... 4
Measuring ranges ... 4
Operable flow range ... 4
Input signal ... 4

**Output ... 4**
Output signal ... 4
Signal on alarm ... 6
Load ... 6
Low flow cutoff ... 6
Galvanic isolation ... 6
Switching output ... 6

**Power supply ... 7**
Terminal assignment ... 7
Supply voltage ... 8
Power consumption ... 8
Power supply failure ... 8
Electrical connection, measuring unit ... 9
Electrical connection, remote version ... 10
Potential equalization ... 10
Cable entries ... 11
Remote version cable specifications ... 12

**Performance characteristics ... 13**
Reference operating conditions ... 13
Maximum measured error ... 13
Repeatability ... 13

**Installation ... 14**
Mounting location ... 14
Orientation ... 15
Inlet and outlet runs ... 16
Adapters ... 17
Length of connecting cable ... 17
Foundations, support ... 18

**Environment ... 19**
Ambient temperature range ... 19
Storage temperature ... 19
Degree of protection ... 19
Shock and vibration resistance ... 19
Electromagnetic compatibility (EMC) ... 19

**Process ... 20**
Medium temperature range ... 20
Conductivity ... 20
Pressure-temperature ratings ... 20
Medium pressure range (nominal pressure) ... 23
Pressure tightness ... 23
Limiting flow ... 24
Pressure loss ... 26
Vibrations ... 26

**Mechanical construction ... 27**
Design, dimensions ... 27
Weight ... 40
Measuring tube specifications ... 42
Material ... 43
Fitted electrodes ... 43
Process connections ... 43
Surface roughness ... 43

**Operability ... 44**
Local operation ... 44
Language groups ... 44
Remote operation ... 44

**Certificates and approvals ... 45**
CE mark ... 45
C-tick symbol ... 45
Pressure measuring device approval ... 45
Ex approval ... 45
Other standards and guidelines ... 45
FOUNDATION Fieldbus certification ... 45
Modbus RS485 certification ... 45
PROFIBUS DP/PA certification ... 45

**Ordering information ... 46**

**Accessories ... 46**

**Documentation ... 46**

**Registered trademarks ... 46**

# Function and system design

## Measuring principle

Following *Faraday's law of magnetic induction*, a voltage is induced in a conductor moving through a magnetic field.
In the electromagnetic measuring principle, the flowing medium is the moving conductor.
The voltage induced is proportional to the flow velocity and is supplied to the amplifier by means of two measuring electrodes. The flow volume is calculated by means of the pipe cross-sectional area.
The DC magnetic field is created through a switched direct current of alternating polarity.

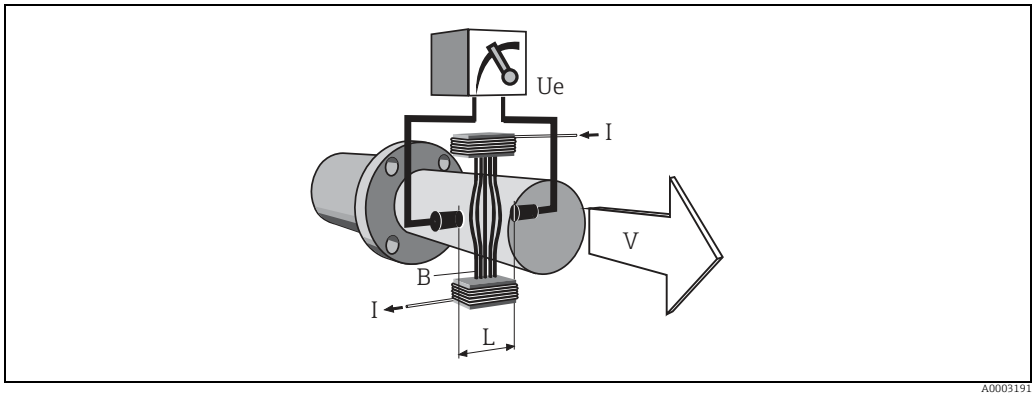


A0003191

$Ue = B \cdot L \cdot v$
$Q = A \cdot v$

| | |
|---|---|
| *Ue* | *Induced voltage* |
| *B* | *Magnetic induction (magnetic field)* |
| *L* | *Electrode spacing* |
| *v* | *Flow velocity* |
| *Q* | *Volume flow* |
| *A* | *Pipe cross-section* |
| *I* | *Current strength* |

## Measuring system

The measuring system consists of a transmitter and a sensor.
Two versions are available:
- Compact version: Transmitter and sensor form a mechanical unit.
- Remote version: Sensor is mounted separate from the transmitter.

Transmitter:
- Promag 50 (user interface with push buttons for operation, two-line display, illuminated)
- Promag 53 ("Touch Control" without opening the housing, four-line display, unilluminated)

Sensor:
- Promag W (DN 25 to 2000 / 1 to 78")

# Input

**Measured variable**

Flow velocity (proportional to induced voltage)

**Measuring ranges**

Measuring ranges for liquids
Typically v = 0.01 to 10 m/s (0.03 to 33 ft/s) with the specified accuracy

**Operable flow range**

Over 1000 : 1

**Input signal**

**Status input (auxiliary input)**
- U = 3 to 30 V DC, $R_i$ = 5 kΩ, galvanically isolated
- Configurable for: totalizer(s) reset, measured value suppression, error-message reset

**Status input (auxiliary input) with PROFIBUS DP and Modbus RS485**
- U = 3 to 30 V DC, $R_i$ = 3 kΩ, galvanically isolated
- Switching level: 3 to 30 V DC, independent of polarity
- Configurable for: totalizer(s) reset, measured value suppression, error-message reset, batching start/stop (optional), batch totalizer reset (optional)

**Current input (only Promag 53)**
- Active/passive selectable, galvanically isolated, full scale value selectable, resolution: 3 µA, temperature coefficient: typ. 0.005% o.r./°C (o.r. = of reading)
- Active: 4 to 20 mA, $R_i$ £ 150 W, max. 24 V DC, short-circuit-proof
- Passive: 0/4 to 20 mA, $R_i$ < 150 W, max. 30 V DC

# Output

**Output signal**

**Promag 50**

**Current output**
Active/passive selectable, galvanically isolated, time constant selectable (0.01 to 100 s), full scale value selectable, temperature coefficient: typ. 0.005% o.r./°C (o.r. = of reading), resolution: 0.5 mA
- Active: 0/4 to 20 mA, $R_L$ < 700 Ω (HART: $R_L \geq 250$ Ω)
- Passive: 4 to 20 mA, operating voltage $V_S$: 18 to 30 V DC, $R_i \geq 150$ Ω

**Pulse/frequency output**
Passive, open collector, 30 V DC, 250 mA, galvanically isolated
- Frequency output: full scale frequency 2 to 1000 Hz ($f_{max}$ = 1250 Hz), on/off ratio 1:1, pulse width max. 10s
- Pulse output: pulse value and pulse polarity selectable, max. pulse width configurable (0.5 to 2000 ms)

**PROFIBUS DP interface**
- Transmission technology (Physical Layer): RS485 in accordance with ASME/TIA/EIA-485-A: 1998, galvanically isolated
- Profil version 3.0
- Data transmission rate: 9,6 kBaud to 12 MBaud
- Automatic data transmission rate recognition
- Function blocks: 1 × analog Input, 1 × totalizer
- Output data: volume flow, totalizer
- Input data: positive zero return (ON/OFF), totalizer control, value for local display
- Cyclic data transmission compatible with previous model Promag 33
- Bus address adjustable via miniature switches or local display (optional) at the measuring device

**PROFIBUS PA interface**
- Transmission technology (Physical Layer): IEC 61158-2 (MBP), galvanically isolated
- Profil version 3.0
- Current consumption: 11 mA
- Permissible supply voltage: 9 to 32 V
- Bus connection with integrated reverse polarity protection
- Error current FDE (Fault Disconnection Electronic): 0 mA
- Function blocks: 1 × analog input, 2 × totalizer
- Output data: volume flow, totalizer
- Input data: positive zero return (ON/OFF), control totalizer, value for local display

- Cyclic data transmission compatible with previous model Promag 33
- Bus address adjustable via miniature switches or local display (optional) at the measuring device

**Promag 53**

**Current output**
Active/passive selectable, galvanically isolated, time constant selectable (0.01 to 100 s), full scale value selectable, temperature coefficient: typ. 0.005% o.r./°C (o.r. = of reading), resolution: 0.5 mA
- Active: 0/4 to 20 mA, $R_L$ < 700 Ω (HART: $R_L \geq 250$ Ω)
- Passive: 4 to 20 mA, operating voltage $V_S$: 18 to 30 V DC, $R_i \geq 150$ Ω

**Pulse/frequency output**
Active/passive selectable, galvanically isolated (Ex i version: only passive)
- Active: 24 V DC, 25 mA (max. 250 mA during 20 ms), $R_L > 100$ Ω
- Passive: open collector, 30 V DC, 250 mA
- Frequency output: full scale frequency 2 to 10000 Hz ($f_{max}$ = 12500 Hz), EEx-ia: 2 to 5000 Hz; on/off ratio 1:1, pulse width max. 10 s
- Pulse output: pulse value and pulse polarity selectable, max. pulse width configurable (0.05 to 2000 ms)

**PROFIBUS DP interface**
- Transmission technology (Physical Layer): RS485 in accordance with ASME/TIA/EIA-485-A: 1998, galvanically isolated
- Profil version 3.0
- Data transmission rate: 9,6 kBaud to 12 MBaud
- Automatic data transmission rate recognition
- Function blocks: 2 × analog Input, 3 × totalizer
- Output data: volume flow, calculated mass flow, totalizer 1 to 3
- Input data: positive zero return (ON/OFF), totalizer control, value for local display
- Cyclic data transmission compatible with previous model Promag 33
- Bus address adjustable via miniature switches or local display (optional) at the measuring device
- Available output combination → 🖹 7

**PROFIBUS PA interface**
- Transmission technology (Physical Layer): IEC 61158-2 (MBP), galvanically isolated
- Profil version 3.0
- Current consumption: 11 mA
- Permissible supply voltage: 9 to 32 V
- Bus connection with integrated reverse polarity protection
- Error current FDE (Fault Disconnection Electronic): 0 mA
- Function blocks: 2 × analog input, 3 × totalizer
- Output data: volume flow, calculated mass flow, totalizer 1 to 3
- Input data: positive zero return (ON/OFF), totalizer control, value for local display
- Cyclic data transmission compatible with previous model Promag 33
- Bus address adjustable via miniature switches or local display (optional) at the measuring device

**Modbus RS485 interface**
- Transmission technology (Physical Layer): RS485 in accordance with ASME/TIA/EIA-485-A: 1998, galvanically isolated
- Modbus device type: Slave
- Address range: 1 to 247
- Bus address adjustable via miniature switches or local display (optional) at the measuring device
- Supported Modbus function codes: 03, 04, 06, 08, 16, 23
- Broadcast: supported with the function codes 06, 16, 23
- Transfer mode: RTU or ASCII
- Supported baudrate: 1200, 2400, 4800, 9600, 19200, 38400, 57600, 115200 Baud
- Response time:
  - Direct data access = typically 25 to 50 ms
  - Auto-scan buffer (data range) = typically 3 to 5 ms
- Available output combination → 🖹 7

**FOUNDATION Fieldbus interface**
- FOUNDATION Fieldbus H1
- Transmission technology (Physical Layer): IEC 61158-2 (MBP), galvanically isolated
- ITK version 5.01
- Current consumption: 12 mA
- Error current FDE (Fault Disconnection Electronic): 0 mA
- Bus connection with integrated reverse polarity protection
- Function blocks:
  - 5 × Analog Input (execution time: 18 ms each)
  - 1 × PID (25 ms)
  - 1 × Digital Output (18 ms)
  - 1 × Signal Characterizer (20 ms)
  - 1 × Input Selector (20 ms)
  - 1 × Arithmetic (20 ms)
  - 1 × Integrator (18 ms)
- Output data: volume flow, calculated mass flow, temperature, totalizer 1 to 3
- Input data: positive zero return (ON/OFF), reset totalizer
- Link Master (LM) functionality is supported

**Signal on alarm**
- Current output ® failure response selectable (e.g. in accordance with NAMUR recommendation NE 43)
- Pulse/frequency output ® failure response selectable
- Status output (Promag 50) ® non-conductive by fault or power supply failure
- Relay output (Promag 53) ® de-energized by fault or power supply failure

**Load**

See "Output signal"

**Low flow cutoff**

Switch points for low flow cutoff are selectable.

**Galvanic isolation**

All circuits for inputs, outputs and power supply are galvanically isolated from each other.

**Switching output**

**Status output (Promag 50, Promag 53)**
Open collector, max. 30 V DC / 250 mA, galvanically isolated.
Configurable for: error messages, Empty Pipe Detection (EPD), flow direction, limit values.

**Relay outputs (Promag 53)**
Normally closed (NC or break) or normally open (NO or make) contacts available
(default: relay 1 = NO, relay 2 = NC), max. 30 V / 0.5 A AC ; 60 V / 0.1 A DC, galvanically isolated.
Configurable for: error messages, Empty Pipe Detection (EPD), flow direction, limit values, batching contacts.

# Power supply

## Terminal assignment

### *Terminal assignment, Promag 50*

| Order code for "Input / Output" | Terminal No. (inputs/outputs) | | | |
|---|---|---|---|---|
| | 20 (+) / 21 (–) | 22 (+) / 23 (–) | 24 (+) / 25 (–) | 26 (+) / 27 (–) |
| W | – | – | – | Current output HART |
| A | – | – | Frequency output | Current output HART |
| D | Status input | Status output | Frequency output | Current output HART |
| H | – | – | – | PROFIBUS PA |
| J | – | – | +5 V (external termination) | PROFIBUS DP |
| S | – | – | Frequency output, Ex i, passive | Current output, Ex i, passive, HART |
| T | – | – | Frequency output, Ex i, passive | Current output, Ex i, passive, HART |

Ground terminal → 🖹 9

### *Terminal assignment, Promag 53*

The inputs and outputs on the communication board can be either permanently assigned or variable, depending on the version ordered (see table). Replacements for modules which are defective or which have to be replaced can be ordered as accessories.

| Order code for "Input / Output" | Terminal No. (inputs/outputs) | | | |
|---|---|---|---|---|
| | 20 (+) / 21 (–) | 22 (+) / 23 (–) | 24 (+) / 25 (–) | 26 (+) / 27 (–) |
| Fixed communication boards (fixed assignment) | | | | |
| A | – | – | Frequency output | Current output HART |
| B | Relay output 2 | Relay output 1 | Frequency output | Current output HART |
| F | – | – | – | PROFIBUS PA, Ex i |
| G | – | – | – | FOUNDATION Fieldbus, Ex i |
| H | – | – | – | PROFIBUS PA |
| J | – | – | – | PROFIBUS DP |
| K | – | – | – | FOUNDATION Fieldbus |
| Q | – | – | Status input | Modbus RS485 |
| S | – | – | Frequency output, Ex i | Current output, Ex i, passive, HART |
| T | – | – | Frequency output, Ex i | Current output, Ex i, passive, HART |
| Flexible communication boards | | | | |
| C | Relay output 2 | Relay output 1 | Frequency output | Current output HART |
| D | Status input | Relay output | Frequency output | Current output HART |
| L | Status input | Relay output 2 | Relay output 1 | Current output HART |
| M | Status input | Frequency output | Frequency output | Current output HART |
| N | Current output | Frequency output | Status input | Modbus RS485 |
| P | Current output | Frequency output | Status input | PROFIBUS DP |
| V | Relay output 2 | Relay output 1 | Status input | PROFIBUS DP |
| 2 | Relay output | Current output | Frequency output | Current output HART |
| 4 | Current input | Relay output | Frequency output | Current output HART |

| Order code for "Input / Output" | Terminal No. (inputs/outputs) | | | |
|---|---|---|---|---|
| | 20 (+) / 21 (–) | 22 (+) / 23 (–) | 24 (+) / 25 (–) | 26 (+) / 27 (–) |
| 7 | Relay output 2 | Relay output 1 | Status input | Modbus RS485 |

Ground terminal → 🖹 9

**Supply voltage**

- 85 to 260 V AC, 45 to 65 Hz
- 20 to 55 V AC, 45 to 65 Hz
- 16 to 62 V DC

PROFIBUS PA and FOUNDATION Fieldbus
- Non-Ex: 9 to 32 V DC
- Ex i: 9 to 24 V DC
- Ex d: 9 to 32 V DC

**Power consumption**

- AC: < 15 VA (incl. sensor)
- DC: < 15 W (incl. sensor)

Switch-on current:
- Max. 3 A (< 5 ms) for 260 V AC
- Max. 13.5 A (< 50 ms) for 24 V DC

**Power supply failure**

Lasting min. ½ cycle frequency: EEPROM saves measuring system data
- EEPROM or T-DAT (Promag 53 only) retain the measuring system data in the event of a power supply failure
- S-DAT: exchangeable data storage chip which stores the data of the sensor (nominal diameter, serial number, calibration factor, zero point etc.)

**Electrical connection, measuring unit**

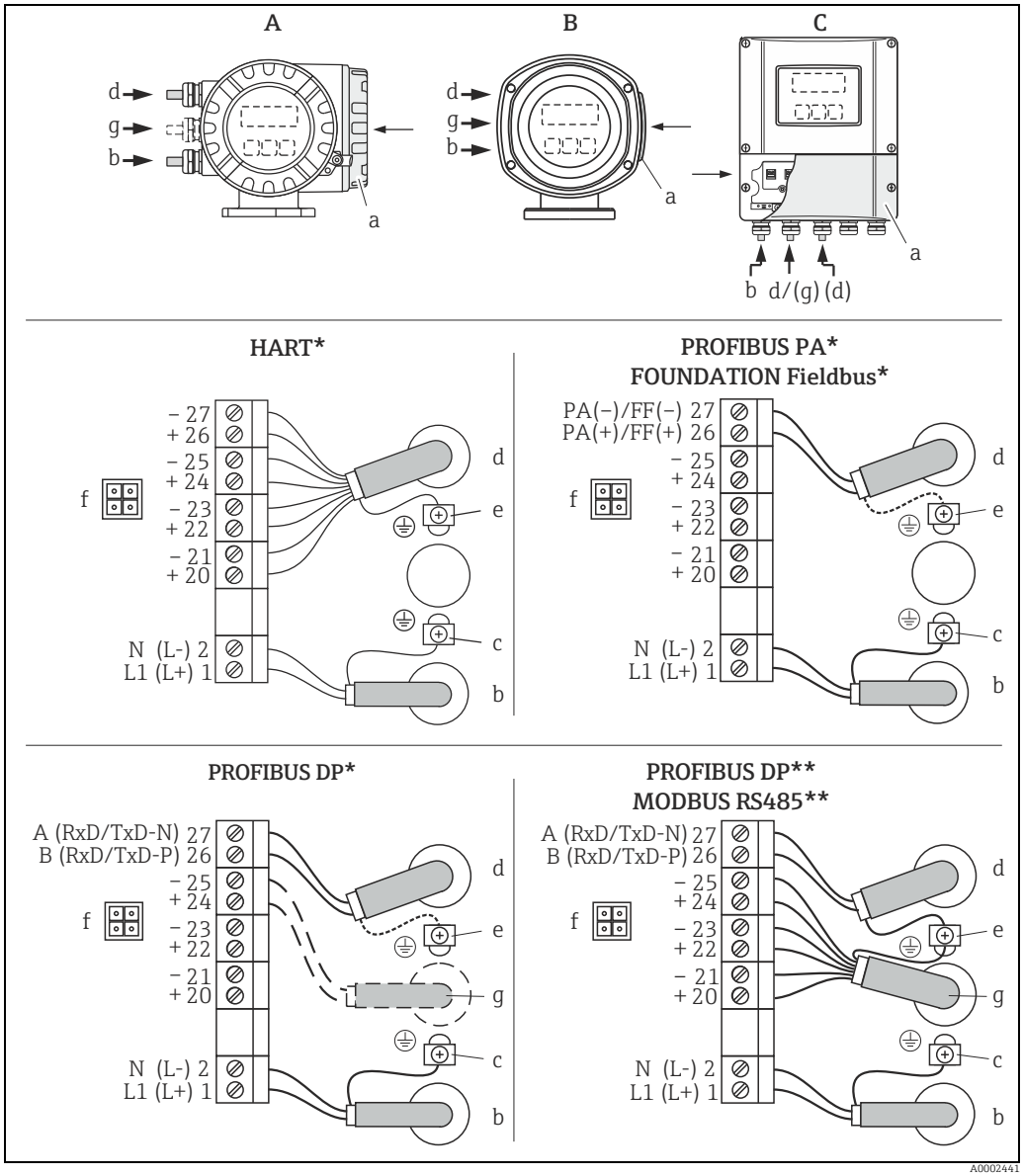


*Connecting the transmitter, cable cross-section max. 2.5 mm² (14 AWG)*

*A* View A (field housing)
*B* View B (stainless steel field housing)
*C* View C (wall-mount housing)

**)* Fixed communication boards
***)* Flexible communication boards
*a* Connection compartment cover
*b* Cable for power supply: 85 to 260 V AC / 20 to 55 V AC / 16 to 62 V DC
- Terminal No. 1: L1 for AC, L+ for DC
- Terminal No. 2: N for AC, L– for DC

*c* Ground terminal for protective conductor
*d* Electrode cable: see "Electrical connection, terminal assignment" → 🖹 7
Fieldbus cable:
- Terminal No. 26: DP (B) / PA + / FF + / Modbus RS485 (B) / (PA, FF: with polarity protection)
- Terminal No. 27: DP (A) / PA – / FF – / Modbus RS485 (A) / (PA, FF: with polarity protection)

*e* Ground terminal for Electrode cable shield / Fieldbus cable / RS485 line
*f* Service adapter for connecting service interface FXA193 (Fieldcheck, FieldCare)
*g* Electrode cable: see "Electrical connection, terminal assignment" → 🖹 7
Cable for external termination (only for PROFIBUS DP with fixed assignment communication board):
- Terminal No. 24: +5 V
- Terminal No. 25: DGND

## Electrical connection, remote version

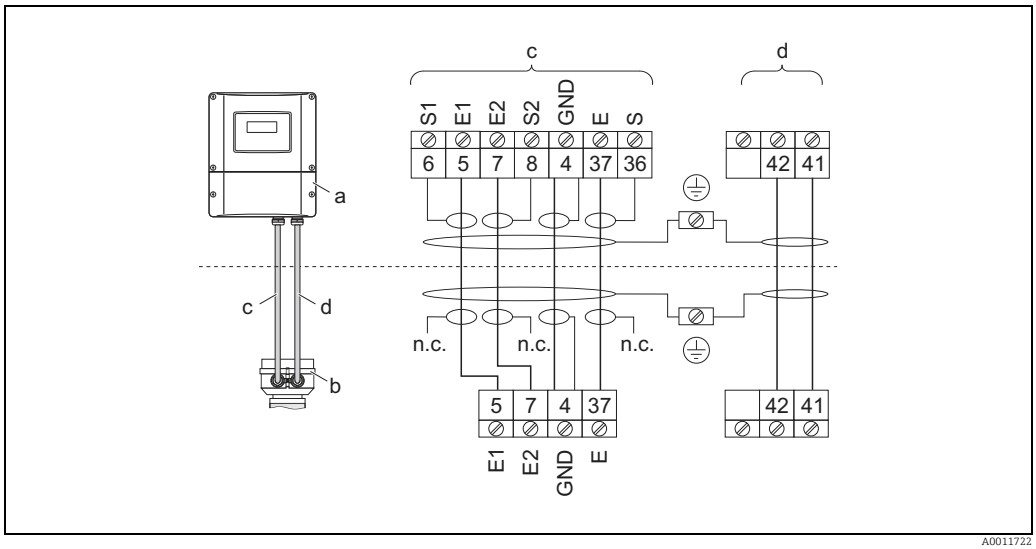


*Connecting the remote version*

*a Wall-mount housing connection compartment*
*b Sensor connection housing cover*
*c Electrode cable*
*d Coil current cable*
*n.c. Not connected, insulated cable shields*
*Terminal no. and cable colors: 6/5 = brown; 7/8 = white; 4 = green; 36/37 = yellow*

## Potential equalization

Note!
The measuring system must be included in the potential equalization.

Perfect measurement is only ensured when the fluid and the sensor have the same electrical potential. This is ensured by the reference electrode integrated in the sensor as standard.

The following should also be taken into consideration for potential equalization:
- Internal grounding concepts in the company
- Operating conditions, such as the material/ grounding of the pipes (see table)

*Standard situation*

| Operating conditions | Potential equalization |
|---|---|
| When using the measuring device in a:<br>▪ Metal, grounded pipe<br>Potential equalization takes place via the ground terminal of the transmitter.<br>Note!<br>When installing in metal pipes, we recommend you connect the ground terminal of the transmitter housing with the piping. | 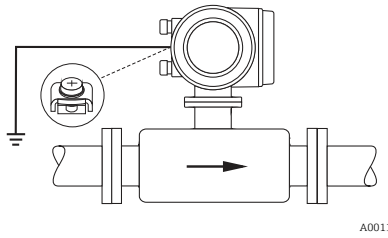<br>A0011892<br>*Via the ground terminal of the transmitter* |

*Special situations*

| Operating conditions | Potential equalization |
|---|---|
| When using the measuring device in a:<br>▪ Metal pipe that is not grounded<br>This connection method also applies in situations where:<br>▪ Customary potential equalization cannot be ensured.<br>▪ Excessively high equalizing currents can be expected.<br>Both sensor flanges are connected to the pipe flange by means of a ground cable (copper wire, at least 6 mm² / 0.0093 in²) and grounded. Connect the transmitter or sensor connection housing, as applicable, to ground potential by means of the ground terminal provided for the purpose.<br>▪ DN ≤ 300 (12"): the ground cable is mounted directly on the conductive flange coating with the flange screws.<br>▪ DN ≥ 350 (14"): the ground cable is mounted directly on the transportation metal support.<br>Note!<br>The ground cable for flange-to-flange connections can be ordered separately as an accessory from Endress+Hauser. | 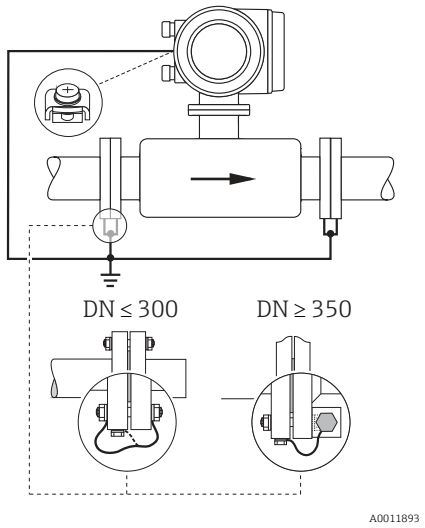<br>A0011893<br>*Via the ground terminal of the transmitter and the flanges of the pipe* |
| When using the measuring device in a:<br>▪ Plastic pipe<br>▪ Pipe with insulating lining<br>This connection method also applies in situations where:<br>▪ Customary potential equalization cannot be ensured.<br>▪ Excessively high equalizing currents can be expected.<br>Potential equalization takes place using additional ground disks, which are connected to the ground terminal via a ground cable (copper wire, at least 6 mm² / 0.0093 in²). When installing the ground disks, please comply with the enclosed Installation Instructions. | 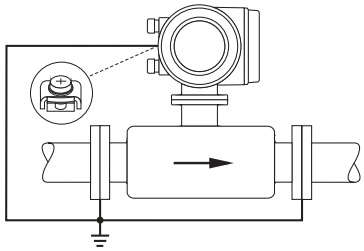<br>A0011895<br>*Via the ground terminal of the transmitter and the optionally available ground disks* |
| When using the measuring device in a:<br>▪ Pipe with a cathodic protection unit<br>The device is installed potential-free in the pipe.<br>Only the two flanges of the pipe are connected with a ground cable (copper wire, at least 6 mm² / 0.0093 in²). Here, the ground cable is mounted directly on the conductive flange coating with flange screws.<br>Note the following when installing:<br>▪ The applicable regulations regarding potential-free installation must be observed.<br>▪ There should be **no** electrically conductive connection between the pipe and the device.<br>▪ The mounting material must withstand the applicable torques. | 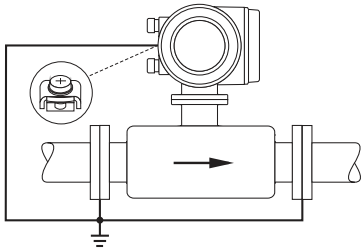<br>A0011896<br>*Potential equalization and cathodic protection*<br>*1 Power supply isolation transformer*<br>*2 Electrically isolated* |

**Cable entries**

Power supply and electrode cables (inputs/ outputs):
- Cable entry M20 × 1.5 (8 to 12 mm / 0.31 to 0.47")
- Sensor cable entry for armoured cables M20 × 1.5 (9.5 to 16 mm / 0.37 to 0.63")
- Thread for cable entries, ½" NPT, G ½"

Connecting cable for remote version:
- Cable entry M20 × 1.5 (8 to 12 mm / 0.31 to 0.47")
- Sensor cable entry for armoured cables M20 × 1.5 (9.5 to 16 mm / 0.37 to 0.63")
- Thread for cable entries, ½" NPT, G ½"

**Remote version cable specifications**

Coil current cable
- 2 × 0.75 mm² (18 AWG) PVC cable with common, braided copper shield (∅ ~ 7 mm / 0.28")
- Conductor resistance: ≤ 37 Ω/km (≤ 0.011 Ω/ft)
- Capacitance core/core, shield grounded: ≤ 120 pF/m (≤ 37 pF/ft)
- Operating temperature: –20 to +80 °C (–68 to +176 °F)
- Cable cross-section: max. 2.5 mm² (14 AWG)
- Test voltage for cable insulation: ≤ 1433 AC r.m.s. 50/60 Hz or ≥ 2026 V DC

Electrode cable
- 3 × 0.38 mm² (20 AWG) PVC cable with common, braided copper shield (∅ ~ 7 mm / 0.28") and individual shielded cores
- With empty pipe detection (EPD): 4 × 0.38 mm² (20 AWG) PVC cable with common, braided copper shield (∅ ~ 7 mm / 0.28") and individual shielded cores
- Conductor resistance: ≤ 50 Ω/km (≤ 0.015 Ω/ft)
- Capacitance core/shield: ≤ 420 pF/m (≤ 128 pF/ft)
- Operating temperature: –20 to +80 °C (–68 to +176 °F)
- Cable cross-section: max. 2.5 mm² (14 AWG)

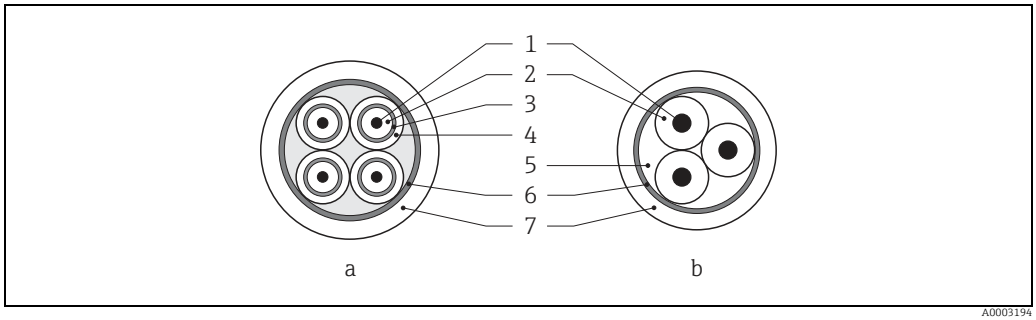


A0003194

*a* *Electrode cable*
*b* *Coil current cable*

*1* *Core*
*2* *Core insulation*
*3* *Core shield*
*4* *Core jacket*
*5* *Core reinforcement*
*6* *Cable shield*
*7* *Outer jacket*

Operation in zones of severe electrical interference
The measuring device complies with the general safety requirements in accordance with EN 61010 and the EMC requirements of IEC/EN 61326 and NAMUR recommendation NE 21.

Note!
Grounding is by means of the ground terminals provided for the purpose inside the connection housing. Ensure that the stripped and twisted lengths of cable shield to the ground terminal are as short as possible.

# Performance characteristics

**Reference operating conditions**

**As per DIN EN 29104 and VDI/VDE 2641:**
- Fluid temperature: +28 °C ± 2 K (+82 °F ± 2 K)
- Ambient temperature: +22 °C ±2 K (+72 °F ± 2 K)
- Warm-up period: 30 minutes

**Installation conditions:**
- Inlet run > 10 × DN
- Outlet run > 5 × DN
- Sensor and transmitter grounded.
- The sensor is centered in the pipe.

**Maximum measured error**

Promag 50:
- Current output: also typically ± 5 µA
- Pulse output: ±0.5% o.r. ± 1 mm/s (±0.5% o.r. ± 0.04 in/s)
  optional: ±0.2% o.r. ± 2 mm/s (±0.2% o.r. ± 0.08 in/s) (o.r. = of reading)

Promag 53:
- Current output: also typically ± 5 µA
- Pulse output: ±0.2% o.r. ± 2 mm/s (±0.2% o.r. ± 0.08 in/s) (o.r. = of reading)

Fluctuations in the supply voltage do not have any effect within the specified range.

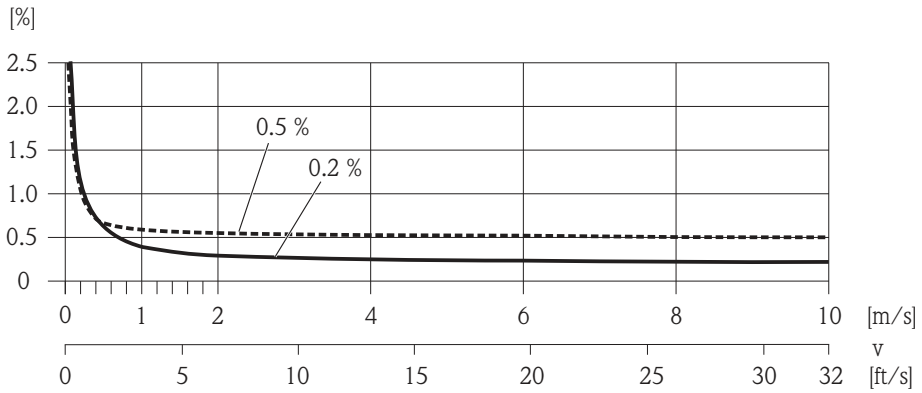


*Max. measured error in % of reading*

**Repeatability**

Max. ±0.1% o.r. ± 0.5 mm/s (±0.1% o.r. ± 0.02 in/s) (o.r. = of reading)

# Installation

## Mounting location

### Mounting location

Entrained air or gas bubble formation in the measuring tube can result in an increase in measuring errors.
**Avoid** the following installation locations in the pipe:
- Highest point of a pipeline. Risk of air accumulating!
- Directly upstream from a free pipe outlet in a vertical pipeline.

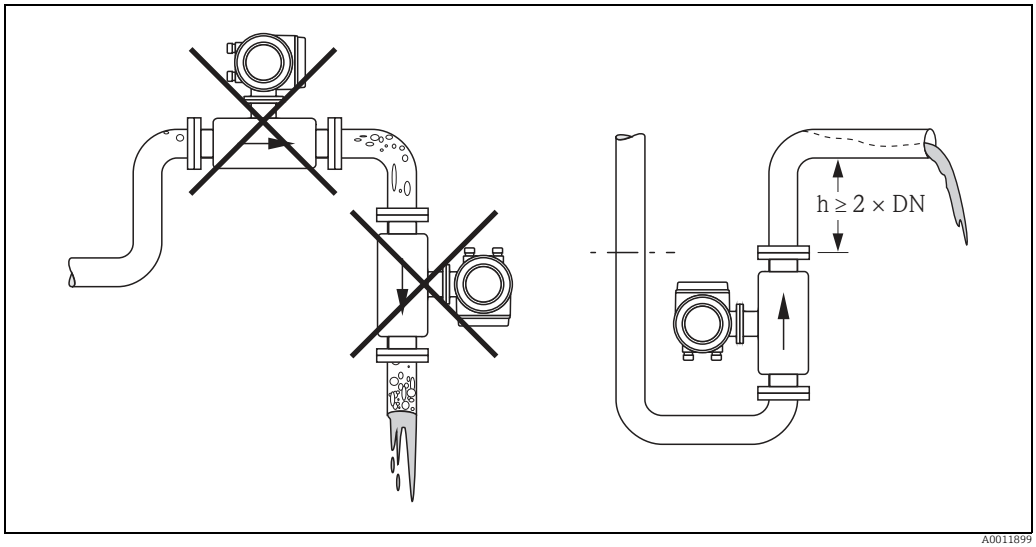


*Mounting location*

### Installation of pumps

Sensors may not be installed on the pump suction side. This precaution is to avoid low pressure and the consequent risk of damage to the lining of the measuring tube. Information on the pressure tightness of the measuring tube lining → 🖹 23, Section "Pressure tightness".
Pulsation dampers may be needed when using piston pumps, piston diaphragm pumps or hose pumps. Information on the shock and vibration resistance of the measuring system → 🖹 19, Section "Shock and vibration resistance".

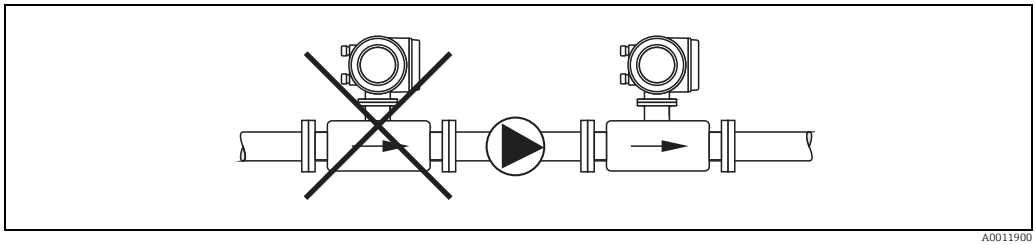


*Installation of pumps*

**Partially filled pipes**
Partially filled pipes with gradients necessitate a drain-type configuration.
The empty pipe detection function (EPD) provides additional security in detecting empty or partially filled pipes.

Note!
Risk of solids accumulating. Do not install the sensor at the lowest point in the drain. It is advisable to install a cleaning valve.

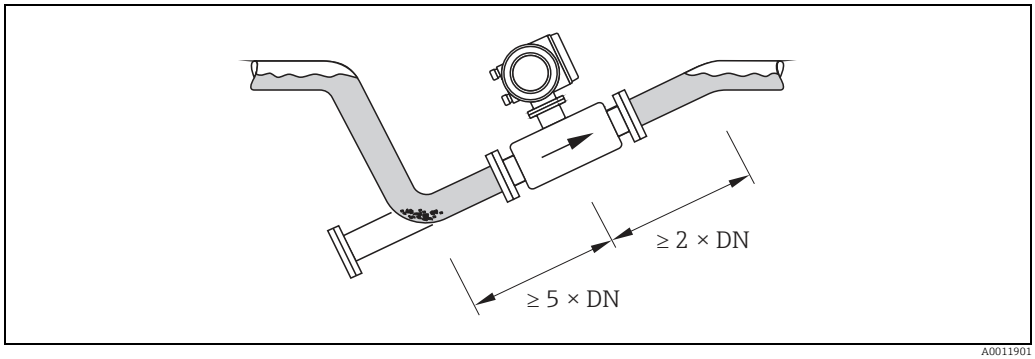


A0011901

*Installation with partially filled pipes*

**Down pipes**
Install a siphon or a vent valve downstream of the sensor in down pipes h ≥ 5 m (16.4 ft). This precaution is to avoid low pressure and the consequent risk of damage to the lining of the measuring tube. This measure also prevents the liquid current stopping in the pipe which could cause air locks. Information on the pressure tightness of the measuring tube lining → 🖹 23, Section "Pressure tightness".

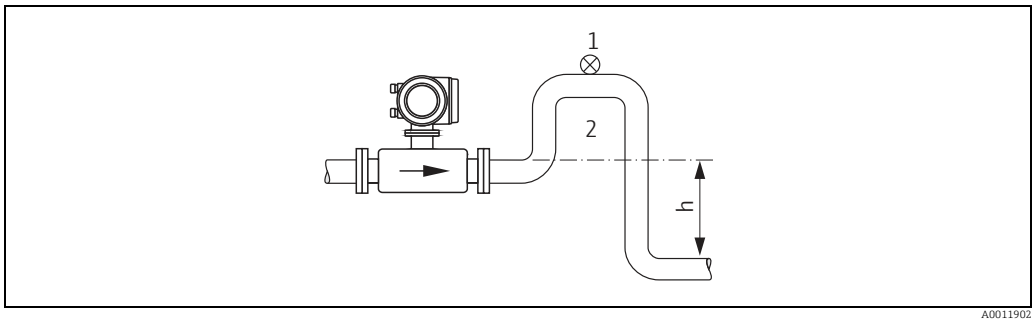


A0011902

*Installation measures for vertical pipes*

*1 Vent valve*
*2 Pipe siphon*
*h Length of the down pipe*

**Orientation**

An optimum orientation helps avoid gas and air accumulations and deposits in the measuring tube. However, the measuring device also offers the additional function of empty pipe detection (EPD) for detecting partially filled measuring tubes or if outgassing fluids or fluctuating operating pressures are present.

*Vertical orientation*
This is the ideal orientation for self-emptying piping systems and for use in conjunction with empty pipe detection.

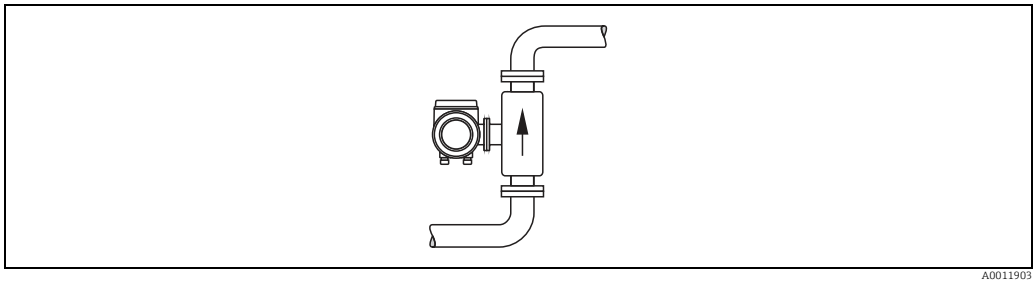

A0011903

*Vertical orientation*

*Horizontal orientation*

The measuring electrode axis should be horizontal. This prevents brief insulation of the two measuring electrodes by entrained air bubbles.

Note!

Empty pipe detection only works correctly with horizontal orientation if the transmitter housing is facing upwards. Otherwise there is no guarantee that empty pipe detection will respond if the measuring tube is only partially filled or empty.

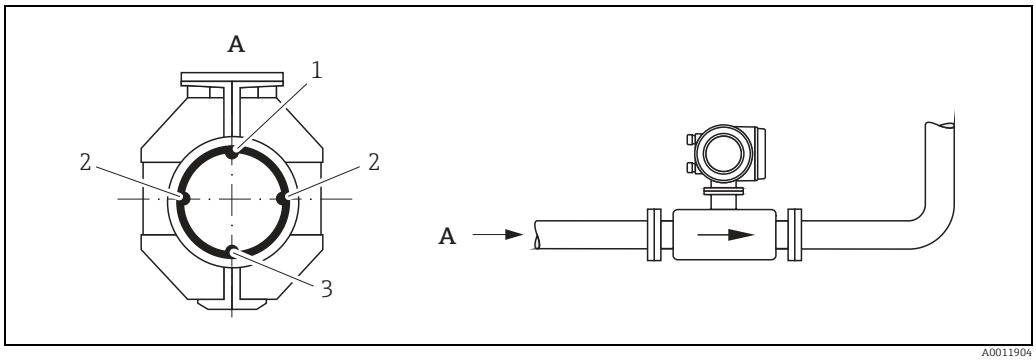


A0011904

*Horizontal orientation*

*1 EPD electrode for empty pipe detection*
*2 Measuring electrodes for signal detection*
*3 Reference electrode for potential equalization*

**Inlet and outlet runs**

If possible, install the sensor well clear of assemblies such as valves, T-pieces, elbows etc.

Note the following inlet and outlet runs to comply with measuring accuracy specifications:

- Inlet run: ≥ 5 × DN
- Outlet run: ≥ 2 × DN

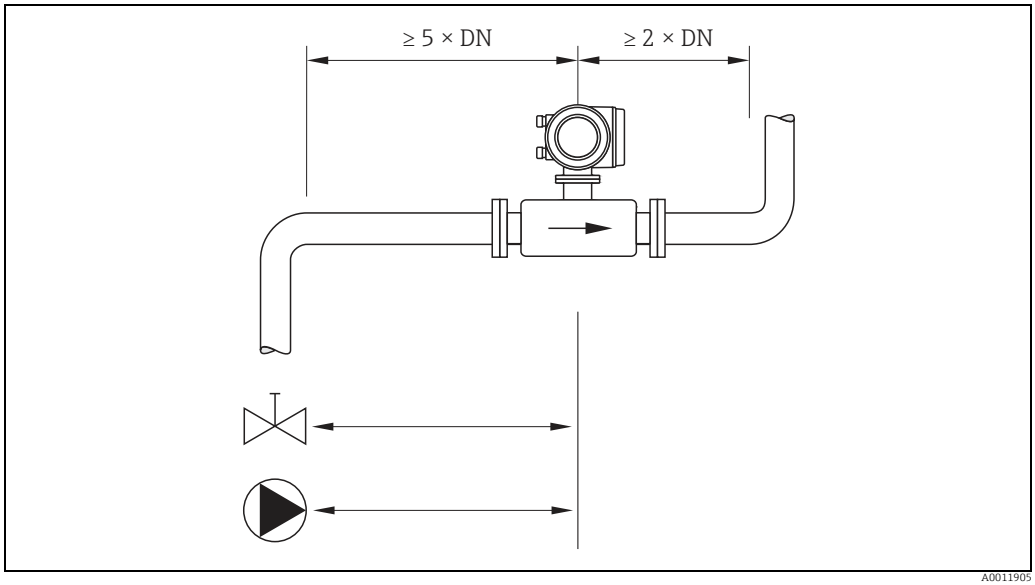


*Inlet and outlet run*

**Adapters**

Suitable adapters to DIN EN 545 (double-flange reducers) can be used to install the sensor in larger-diameter pipes. The resultant increase in the rate of flow improves measuring accuracy with very slow-moving fluids. The nomogram shown here can be used to calculate the pressure loss caused by reducers and expanders.

Note!
The nomogram only applies to liquids of viscosity similar to water.

1. Calculate the ratio of the diameters d/D.
2. From the nomogram read off the pressure loss as a function of flow velocity (downstream from the reduction) and the d/D ratio.

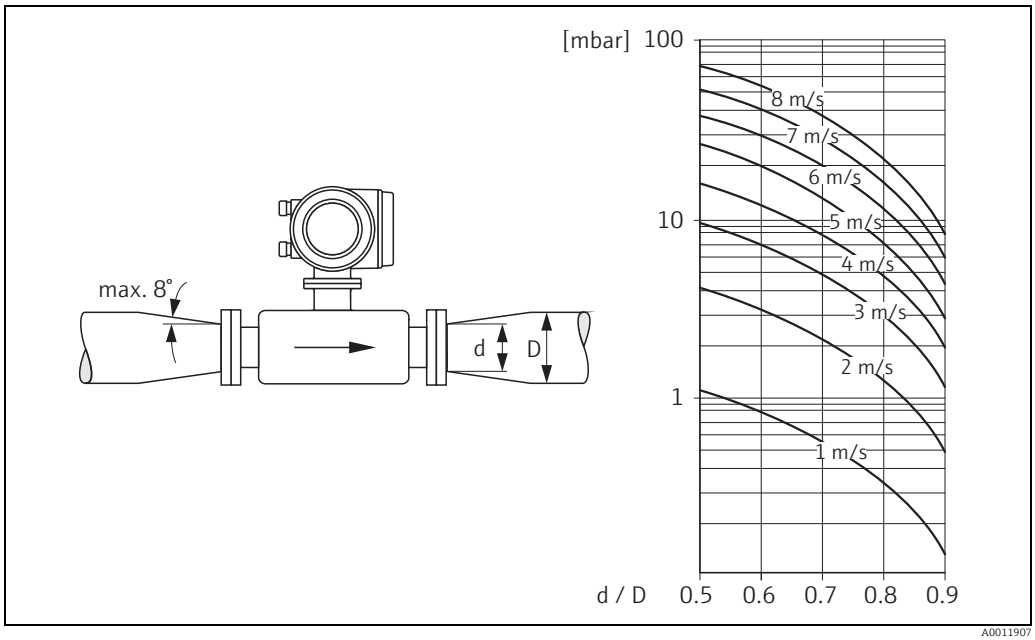


*Pressure loss due to adapters*

**Length of connecting cable**

When mounting the remote version, please note the following to achieve correct measuring results:

- Fix cable run or lay in armored conduit. Cable movements can falsify the measuring signal especially in the case of low fluid conductivities.

- Route the cable well clear of electrical machines and switching elements.
- If necessary, ensure potential equalization between sensor and transmitter.
- The permitted cable length $L_{max}$ is determined by the fluid conductivity. A minimum conductivity of 20 µS/cm is required for measuring demineralized water.
- When the empty pipe detection function is switched on (EPD), the maximum connecting cable length is 10 m (33 ft).

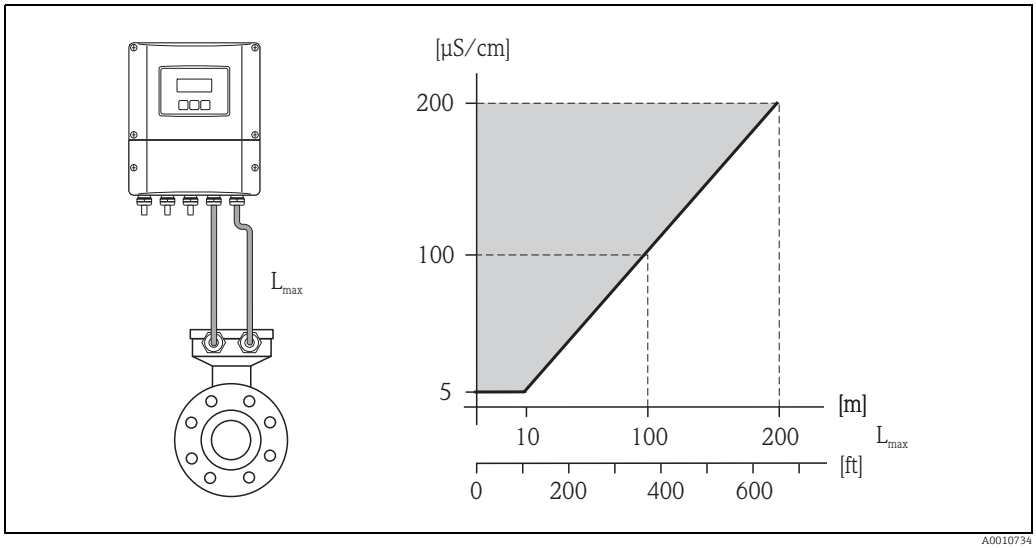


*Permitted length of connecting cable for remote version*
*Area marked in gray = permitted range; $L_{max}$ = length of connecting cable in [m] ([ft]); fluid conductivity in [µS/cm]*

**Foundations, support**

If the nominal diameter is DN ≥ 350, mount the transmitter on a foundation of adequate load-bearing strength.

Note!
Do not allow the casing to take the weight of the sensor. This would buckle the casing and damage the internal magnetic coils.

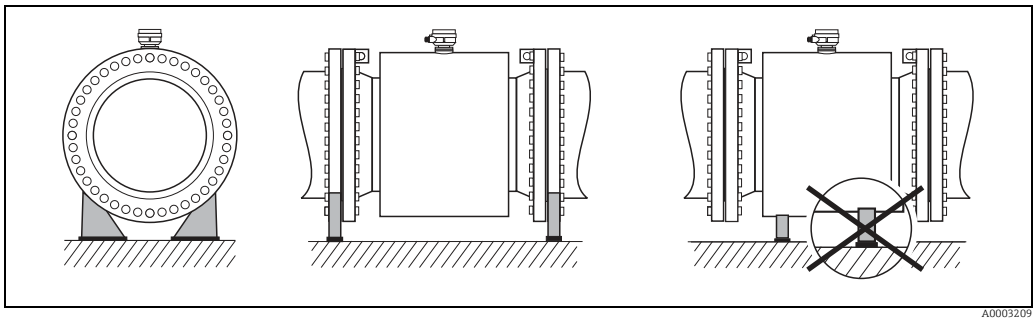

# Environment

**Ambient temperature range**

**Transmitter**
- Standard: −20 to +60 °C (−4 to +140 °F)
- Optional: −40 to +60 °C (−40 to +140 °F)



Note!
At ambient temperatures below −20 °C (−4 °F)the readability of the display may be impaired.

**Sensor**
- Flange material carbon steel: −10 to +60 °C (14 to +140 °F)
- Flange material stainless steel: −40 to +60 °C (−40 to +140 °F)



Note!
The permitted temperature range of the measuring tube lining may not be undershot or overshot → 20, Section "Medium temperature range".

Please note the following points:
- Install the device in a shady location. Avoid direct sunlight, particularly in warm climatic regions.
- The transmitter must be mounted separate from the sensor if both the ambient and fluid temperatures are high.

**Storage temperature**

The storage temperature corresponds to the operating temperature range of the measuring transmitter and the appropriate measuring sensors.



Note!
- The measuring device must be protected against direct sunlight during storage in order to avoid unacceptably high surface temperatures.
- A storage location must be selected where moisture does not collect in the measuring device. This will help prevent fungus and bacteria infestation which can damage the liner.
- Do not remove the protective plates or caps on the process connections until the device is ready to install.

**Degree of protection**

- Standard: IP 67 (NEMA 4X) for transmitter and sensor.
- Optional: IP 68 (NEMA 6P) for sensor for remote version.
- For information regarding applications where the device is buried directly in the soil or is installed in a flooded wastewater basin please contact your local Endress+Hauser Sales Center.

**Shock and vibration resistance**

Acceleration up to 2 g following IEC 600 68-2-6

**Electromagnetic compatibility (EMC)**

As per IEC/EN 61326 and NAMUR recommendation NE 21.

# Process

**Medium temperature range**

The permitted temperature depends on the lining of the measuring tube:
- Polyurethane: −20 to +50 °C (−4 to +122 °F) (DN 25 to 1200 / 1 to 48")
- Hard rubber: ±0 to +80 °C (+32 to +176 °F) (DN 50 to 2000 / 2 to 78")

**Conductivity**

The minimum conductivity is:
- ≥ 5 µS/cm for fluids generally
- ≥ 20 µS/cm for demineralized water

Note!
In the remote version, the necessary minimum conductivity also depends on the cable length (→ 17, Section "Length of connecting cable").

**Pressure-temperature ratings**

Note!
The following diagrams contain material load diagrams (reference curves) for flange materials with regard to the medium temperature. However, the maximum medium temperatures permitted always depend on the lining material of the sensor and/or the sealing material (→ 20).

**Flange connection to EN 1092-1 (DIN 2501)**
Material: S235JRG2, S235JR+N, P250GH, P245GH, E250C, A105

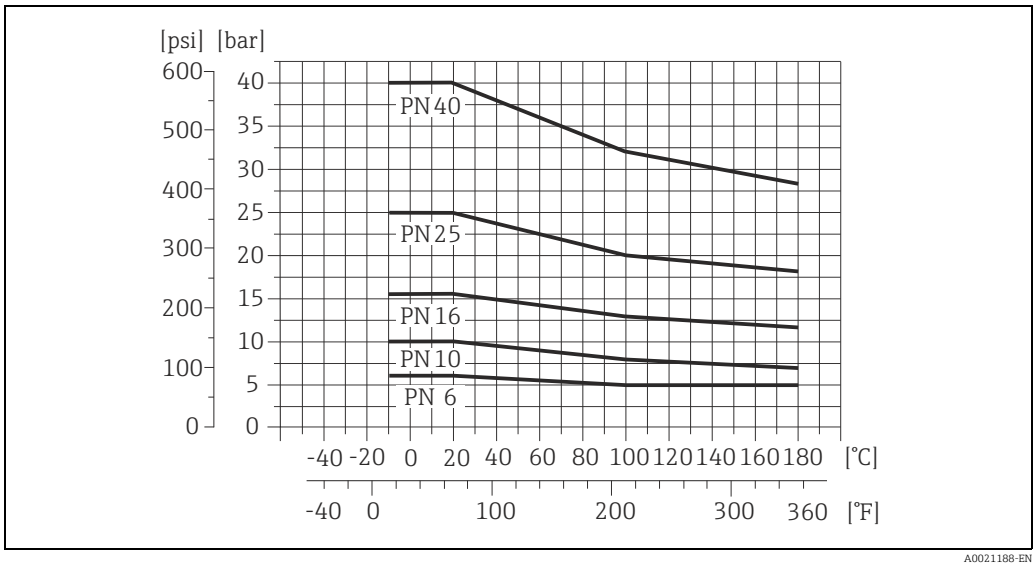


A0021188-EN

**Flange connection to EN 1092-1 (DIN 2501)**
Material: 1.4571, 1.4404, F316L

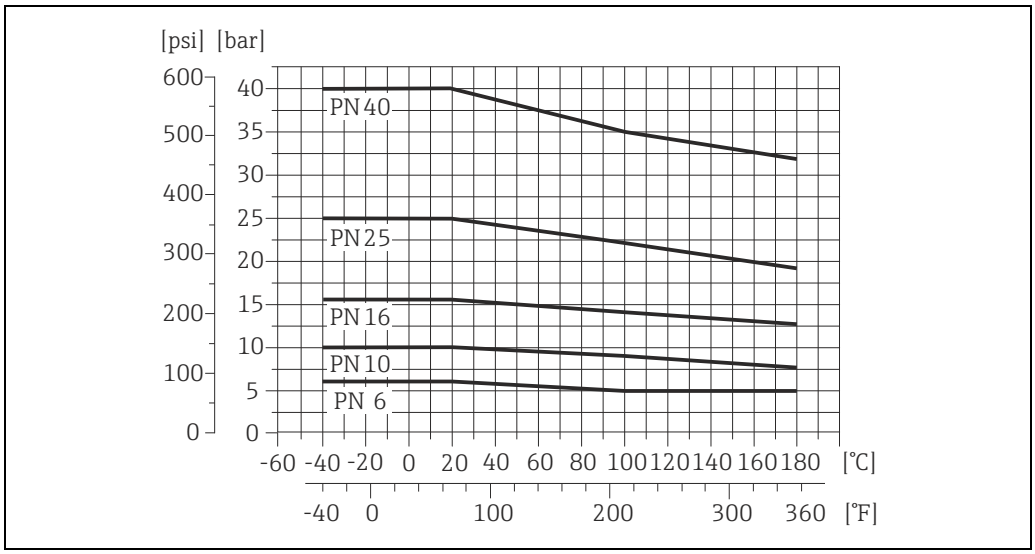


A0021184-EN

**Flange connection to ASME B16.5**
Material: A 105

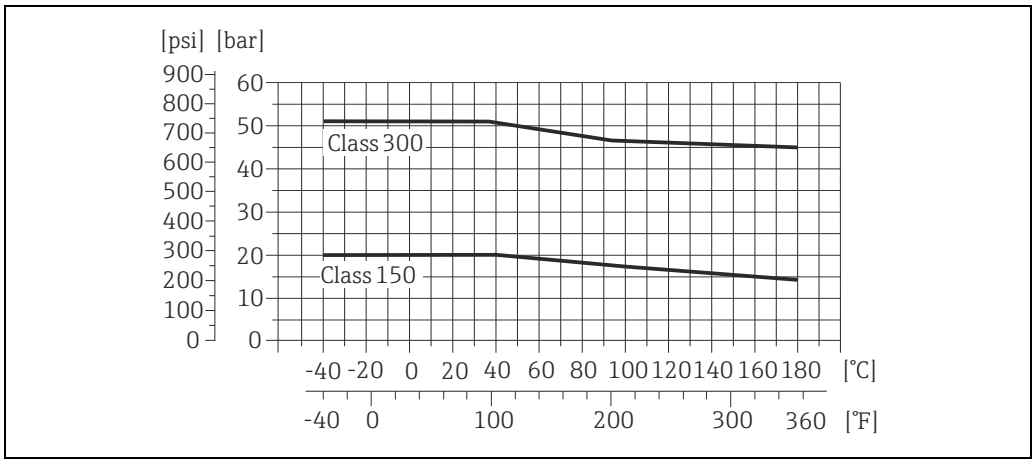


A0021182-EN

**Flange connection to ASME B16.5**
Material: F316L

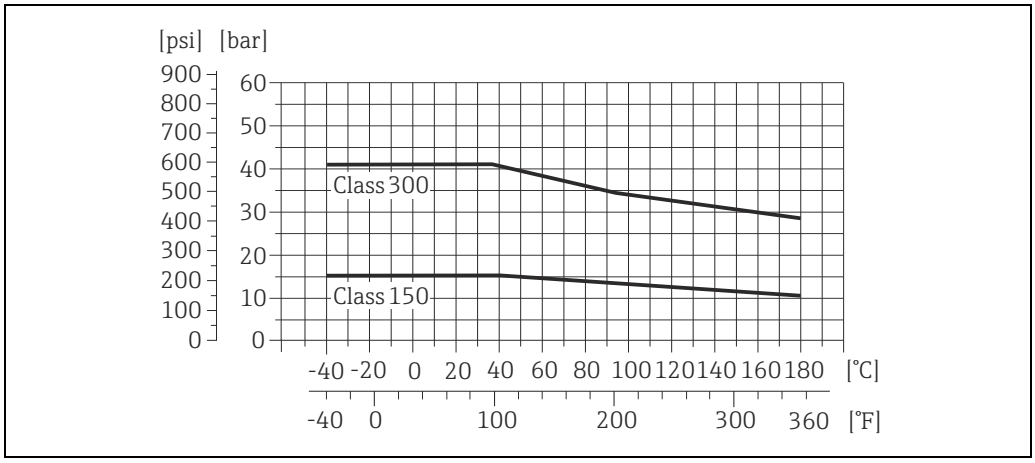


A0021185-EN

**Flange connection to AWWA C 207, Class D**
Material: A105, A181 Cl.70, P265GH, S275JR, E250C, S235JRG2

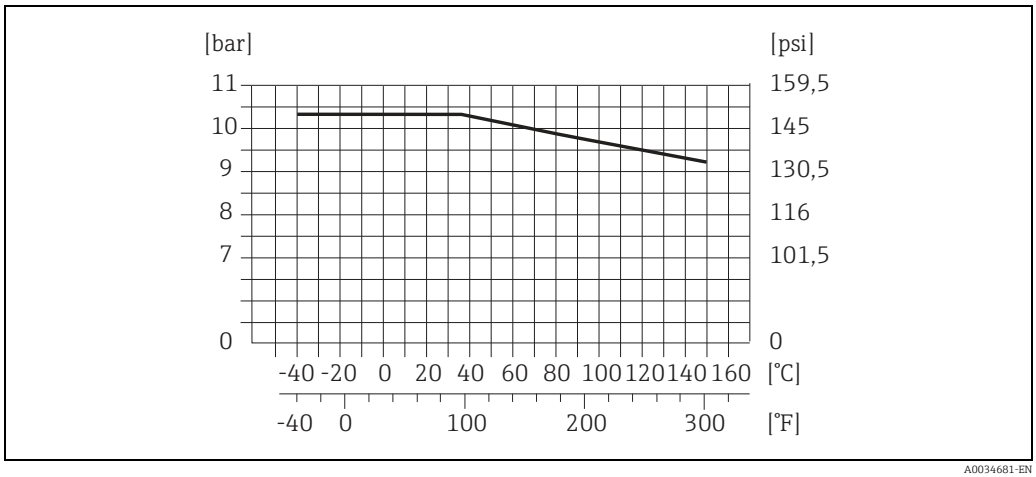


A0034681-EN

**Flange connection to JIS B2220**
Material: A105, A350 LF2, F316L

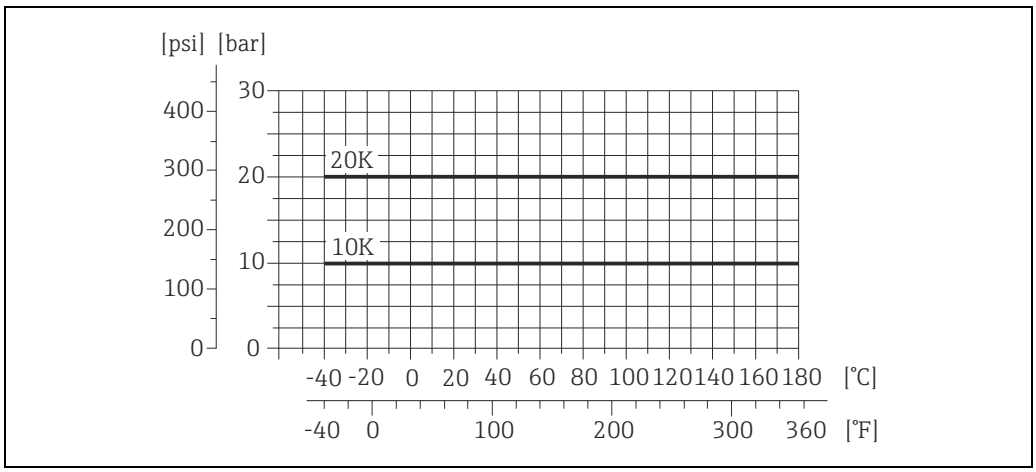


A0021183-EN

**Flange connection to AS 2129 Table E**
Material: A105, P235GH, P265GH, S235JRG2

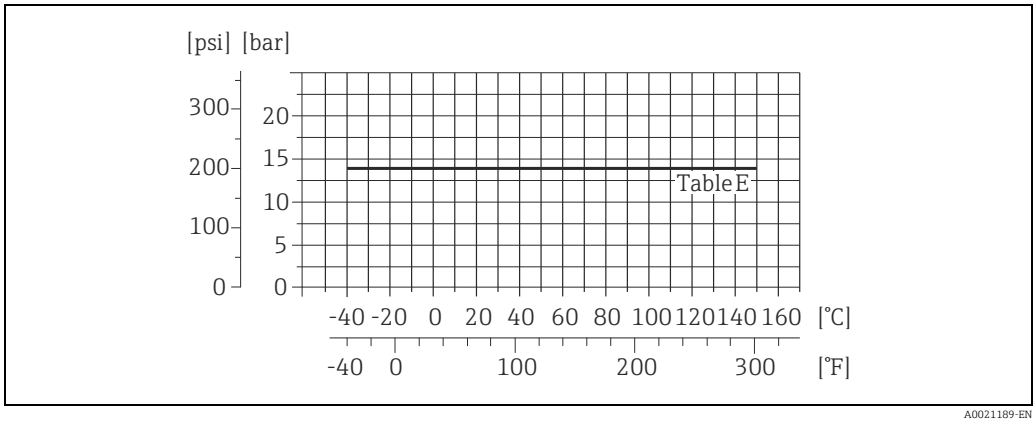


A0021189-EN

**Flange connection to AS 4087 PN 16**
Material: A105, P265GH, S275JR

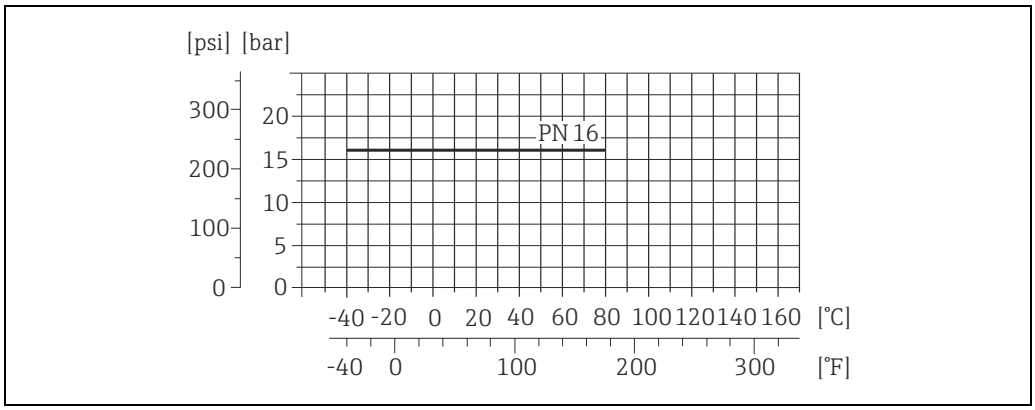


A0023077-EN

**Medium pressure range (nominal pressure)**

- EN 1092-1 (DIN 2501)
  - PN 6 (DN 350 to 2000 / 14 to 78")
  - PN 10 (DN 200 to 2000 / 8 to 78")
  - PN 16 (DN 65 to 2000 / 3 to 78")
  - PN 25 (DN 200 to 1000 / 8 to 40")
  - PN 40 (DN 25 to 150 / 1 to 6")
- ASME B 16.5
  - Class 150 (DN 1 to 24")
  - Class 300 (DN 1 to 6")
- AWWA C2072
  - Class D (DN 28 to 78")
- JIS B2220
  - 10K (DN 50 to 750 / 2 to 30")
  - 20K (DN 25 to 600 / 1 to 24")
- AS 2129
  - Table E (DN 80, 100, 150 to 400, 500, 600 / 3", 4", 6 to 16", 20", 24")
- AS 4087
  - PN 16 (DN 80, 100, 150 to 400, 500, 600 / 3", 4", 6 to 16", 20", 24")

**Pressure tightness**

*Measuring tube lining: Polyurethane*

| Nominal diameter | | Limit values for abs. pressure [mbar] ([psi]) at fluid temperatures: | | | |
|---|---|---|---|---|---|
| | | 25 °C (77 °F) | | 50 °C (122 °F) | |
| [mm] | [inch] | [mbar] | [psi] | [mbar] | [psi] |
| 25 to 1200 | 1 to 48" | 0 | 0 | 0 | 0 |

*Measuring tube lining: Hard rubber*

| Nominal diameter | | Limit values for abs. pressure [mbar] ([psi]) at fluid temperatures: | | | | | |
|---|---|---|---|---|---|---|---|
| | | 25 °C (77 °F) | | 50 °C (122 °F) | | 80 °C (176 °F) | |
| [mm] | [inch] | [mbar] | [psi] | [mbar] | [psi] | [mbar] | [psi] |
| 50 to 2000 | 2 to 78" | 0 | 0 | 0 | 0 | 0 | 0 |

**Limiting flow**

The diameter of the pipe and the flow rate determine the nominal diameter of the sensor.
The optimum flow velocity is between 2 to 3 m/s (6.5 to 9.8 ft/s). The velocity of flow (v), moreover, has to be matched to the physical properties of the fluid:

- v < 2 m/s (6.5 ft/s): for abrasive fluids such as potter's clay, lime milk, ore slurry etc.
- v > 2 m/s (6.5 ft/s): for fluids causing build-up such as wastewater sludges etc.

| Flow characteristic values (SI units) | | | | | |
|---|---|---|---|---|---|
| Diameter | | Recommended flow | Factory settings | | |
| [mm] | [inch] | Min./max. full scale value (v ~ 0.3 or 10 m/s) | Full scale value Current output (v ~ 2.5 m/s) | Pulse value (~ 2 pulses/s) | Low flow (v ~ 0.04 m/s) |
| 25 | 1" | 9 to 300 dm³/min | 75 dm³/min | 0.50 dm³ | 1 dm³/min |
| 32 | – | 15 to 500 dm³/min | 125 dm³/min | 1.00 dm³ | 2 dm³/min |
| 40 | 1½" | 25 to 700 dm³/min | 200 dm³/min | 1.50 dm³ | 3 dm³/min |
| 50 | 2" | 35 to 1100 dm³/min | 300 dm³/min | 2.50 dm³ | 5 dm³/min |
| 65 | – | 60 to 2000 dm³/min | 500 dm³/min | 5.00 dm³ | 8 dm³/min |
| 80 | 3" | 90 to 3000 dm³/min | 750 dm³/min | 5.00 dm³ | 12 dm³/min |
| 100 | 4" | 145 to 4700 dm³/min | 1200 dm³/min | 10.00 dm³ | 20 dm³/min |
| 125 | – | 220 to 7500 dm³/min | 1850 dm³/min | 15.00 dm³ | 30 dm³/min |
| 150 | 6" | 20 to 600 m³/h | 150 m³/h | 0.025 m³ | 2.5 m³/h |
| 200 | 8" | 35 to 1100 m³/h | 300 m³/h | 0.05 m³ | 5.0 m³/h |
| 250 | 10" | 55 to 1700 m³/h | 500 m³/h | 0.05 m³ | 7.5 m³/h |
| 300 | 12" | 80 to 2400 m³/h | 750 m³/h | 0.10 m³ | 10 m³/h |
| 350 | 14" | 110 to 3300 m³/h | 1000 m³/h | 0.10 m³ | 15 m³/h |
| 375 | 15" | 140 to 4200 m³/h | 1200 m³/h | 0.15 m³ | 20 m³/h |
| 400 | 16" | 140 to 4200 m³/h | 1200 m³/h | 0.15 m³ | 20 m³/h |
| 450 | 18" | 180 to 5400 m³/h | 1500 m³/h | 0.25 m³ | 25 m³/h |
| 500 | 20" | 220 to 6600 m³/h | 2000 m³/h | 0.25 m³ | 30 m³/h |
| 600 | 24" | 310 to 9600 m³/h | 2500 m³/h | 0.30 m³ | 40 m³/h |
| 700 | 28" | 420 to 13500 m³/h | 3500 m³/h | 0.50 m³ | 50 m³/h |
| – | 30" | 480 to 15000 m³/h | 4000 m³/h | 0.50 m³ | 60 m³/h |
| 800 | 32" | 550 to 18000 m³/h | 4500 m³/h | 0.75 m³ | 75 m³/h |
| 900 | 36" | 690 to 22500 m³/h | 6000 m³/h | 0.75 m³ | 100 m³/h |
| 1000 | 40" | 850 to 28000 m³/h | 7000 m³/h | 1.00 m³ | 125 m³/h |
| – | 42" | 950 to 30000 m³/h | 8000 m³/h | 1.00 m³ | 125 m³/h |
| 1200 | 48" | 1250 to 40000 m³/h | 10000 m³/h | 1.50 m³ | 150 m³/h |
| – | 54" | 1550 to 50000 m³/h | 13000 m³/h | 1.50 m³ | 200 m³/h |
| 1400 | – | 1700 to 55000 m³/h | 14000 m³/h | 2.00 m³ | 225 m³/h |
| – | 60" | 1950 to 60000 m³/h | 16000 m³/h | 2.00 m³ | 250 m³/h |
| 1600 | – | 2200 to 70000 m³/h | 18000 m³/h | 2.50 m³ | 300 m³/h |
| – | 66" | 2500 to 80000 m³/h | 20500 m³/h | 2.50 m³ | 325 m³/h |

| Flow characteristic values (SI units) | | | | | |
|---|---|---|---|---|---|
| Diameter | | Recommended flow | Factory settings | | |
| [mm] | [inch] | Min./max. full scale value (v ~ 0.3 or 10 m/s) | Full scale value Current output (v ~ 2.5 m/s) | Pulse value (~ 2 pulses/s) | Low flow (v ~ 0.04 m/s) |
| 1800 | 72" | 2800 to 90000 $m^3$/h | 23000 $m^3$/h | 3.00 $m^3$ | 350 $m^3$/h |
| – | 78" | 3300 to 100000 $m^3$/h | 28500 $m^3$/h | 3.50 $m^3$ | 450 $m^3$/h |
| 2000 | – | 3400 to 110000 $m^3$/h | 28500 $m^3$/h | 3.50 $m^3$ | 450 $m^3$/h |

| Flow characteristic values (US units) | | | | | |
|---|---|---|---|---|---|
| Diameter | | Recommended flow rate | Factory settings | | |
| [inch] | [mm] | Min./max. full scale value (v ~ 0.3 or 10 m/s) | Full scale value Current output (v ~ 2.5 m/s) | Pulse value (~ 2 pulses/s) | Low flow (v ~ 0.04 m/s) |
| 1" | 25 | 2.5 to 80 gal/min | 18 gal/min | 0.20 gal | 0.25 gal/min |
| – | 32 | 4 to 130 gal/min | 30 gal/min | 0.20 gal | 0.50 gal/min |
| 1½" | 40 | 7 to 190 gal/min | 50 gal/min | 0.50 gal | 0.75 gal/min |
| 2" | 50 | 10 to 300 gal/min | 75 gal/min | 0.50 gal | 1.25 gal/min |
| – | 65 | 16 to 500 gal/min | 130 gal/min | 1 gal | 2.0 gal/min |
| 3" | 80 | 24 to 800 gal/min | 200 gal/min | 2 gal | 2.5 gal/min |
| 4" | 100 | 40 to 1250 gal/min | 300 gal/min | 2 gal | 4.0 gal/min |
| – | 125 | 60 to 1950 gal/min | 450 gal/min | 5 gal | 7.0 gal/min |
| 6" | 150 | 90 to 2650 gal/min | 600 gal/min | 5 gal | 12 gal/min |
| 8" | 200 | 155 to 4850 gal/min | 1200 gal/min | 10 gal | 15 gal/min |
| 10" | 250 | 250 to 7500 gal/min | 1500 gal/min | 15 gal | 30 gal/min |
| 12" | 300 | 350 to 10600 gal/min | 2400 gal/min | 25 gal | 45 gal/min |
| 14" | 350 | 500 to 15000 gal/min | 3600 gal/min | 30 gal | 60 gal/min |
| 15" | 375 | 600 to 19000 gal/min | 4800 gal/min | 50 gal | 60 gal/min |
| 16" | 400 | 600 to 19000 gal/min | 4800 gal/min | 50 gal | 60 gal/min |
| 18" | 450 | 800 to 24000 gal/min | 6000 gal/min | 50 gal | 90 gal/min |
| 20" | 500 | 1000 to 30000 gal/min | 7500 gal/min | 75 gal | 120 gal/min |
| 24" | 600 | 1400 to 44000 gal/min | 10500 gal/min | 100 gal | 180 gal/min |
| 28" | 700 | 1900 to 60000 gal/min | 13500 gal/min | 125 gal | 210 gal/min |
| 30" | – | 2150 to 67000 gal/min | 16500 gal/min | 150 gal | 270 gal/min |
| 32" | 800 | 2450 to 80000 gal/min | 19500 gal/min | 200 gal | 300 gal/min |
| 36" | 900 | 3100 to 100000 gal/min | 24000 gal/min | 225 gal | 360 gal/min |
| 40" | 1000 | 3800 to 125000 gal/min | 30000 gal/min | 250 gal | 480 gal/min |
| 42" | – | 4200 to 135000 gal/min | 33000 gal/min | 250 gal | 600 gal/min |
| 48" | 1200 | 5500 to 175000 gal/min | 42000 gal/min | 400 gal | 600 gal/min |
| 54" | – | 9 to 300 Mgal/min | 75 Mgal/min | 0.0005 Mgal | 1.3 Mgal/min |
| – | 1400 | 10 to 340 Mgal/min | 85 Mgal/min | 0.0005 Mgal | 1.3 Mgal/min |
| 60" | – | 12 to 380 Mgal/min | 95 Mgal/min | 0.0005 Mgal | 1.3 Mgal/min |

| Flow characteristic values (US units) | | | | | |
|---|---|---|---|---|---|
| Diameter | | Recommended flow rate | Factory settings | | |
| [inch] | [mm] | Min./max. full scale value (v ~ 0.3 or 10 m/s) | Full scale value Current output (v ~ 2.5 m/s) | Pulse value (~ 2 pulses/s) | Low flow (v ~ 0.04 m/s) |
| – | 1600 | 13 to 450 Mgal/min | 110 Mgal/min | 0.0008 Mgal | 1.7 Mgal/min |
| 66" | – | 14 to 500 Mgal/min | 120 Mgal/min | 0.0008 Mgal | 2.2 Mgal/min |
| 72" | 1800 | 16 to 570 Mgal/min | 140 Mgal/min | 0.0008 Mgal | 2.6 Mgal/min |
| 78" | – | 18 to 650 Mgal/min | 175 Mgal/min | 0.001 Mgal | 3.0 Mgal/min |
| – | 2000 | 20 to 700 Mgal/min | 175 Mgal/min | 0.001 Mgal | 3.0 Mgal/min |

**Pressure loss**

- No pressure loss if the sensor is installed in a pipe with the same nominal diameter.
- Pressure losses for configurations incorporating adapters according to DIN EN 545 (→ 🖹 17, Section "Adapters").

**Vibrations**

Secure the piping and the sensor if vibration is severe.

Note!
If vibrations are too severe, we recommend the sensor and transmitter be mounted separately. Information on the permitted shock and vibration resistance → 🖹 19, Section "Shock and vibration resistance".

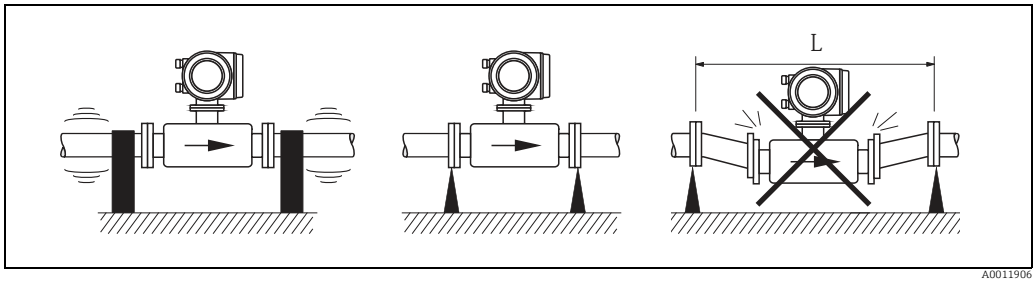


*Measures to prevent vibration of the measuring device*

*L > 10 m (33 ft)*

# Mechanical construction

**Design, dimensions**

**Transmitter remote version, wall-mount housing (non Ex-zone and II3G/Zone 2)**

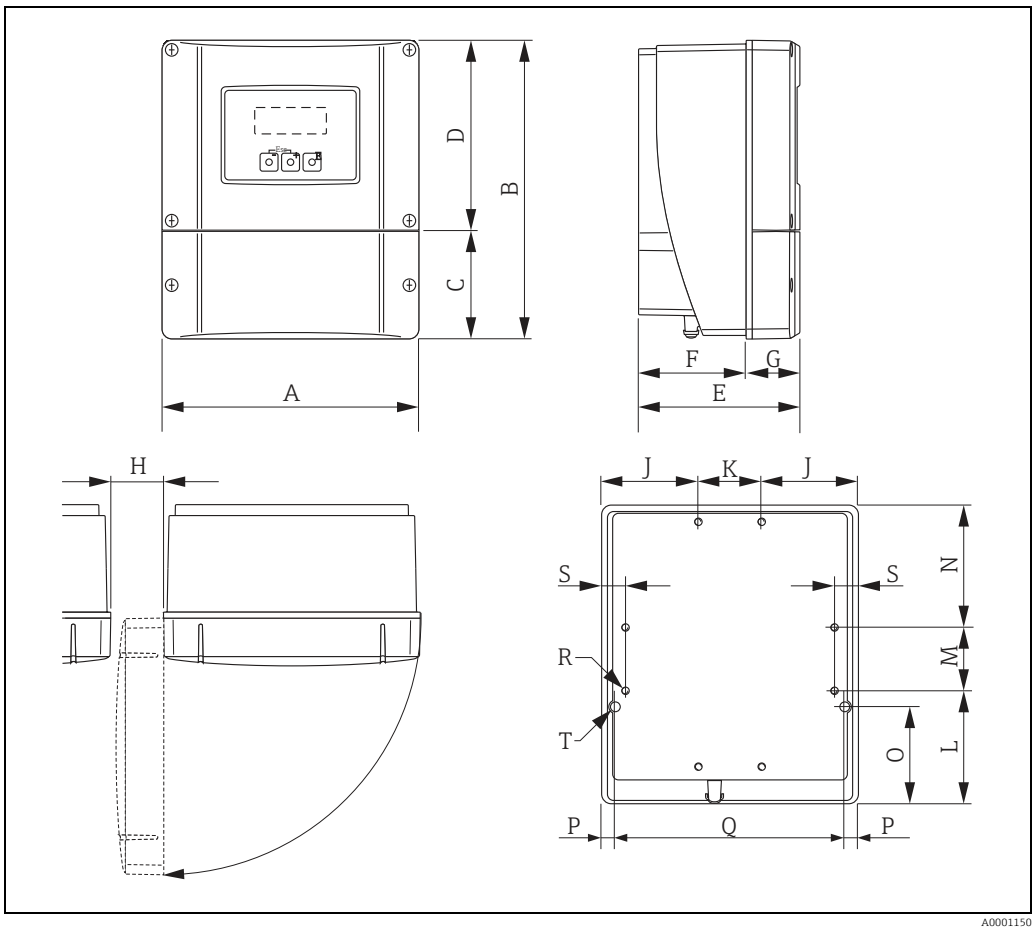


A0001150

*Dimensions (SI units)*

| A | B | C | D | E | F | G | H | J |
|---|---|---|---|---|---|---|---|---|
| 215 | 250 | 90.5 | 159.5 | 135 | 90 | 45 | > 50 | 81 |
| K | L | M | N | O | P | Q | R | S |
| 53 | 95 | 53 | 102 | 81.5 | 11.5 | 192 | 8 × M5 | 20 |

All dimensions in [mm]

*Dimensions (US units)*

| A | B | C | D | E | F | G | H | J |
|---|---|---|---|---|---|---|---|---|
| 8.46 | 9.84 | 3.56 | 6.27 | 5.31 | 3.54 | 1.77 | > 1.97 | 3.18 |
| K | L | M | N | O | P | Q | R | S |
| 2.08 | 3.74 | 2.08 | 4.01 | 3.20 | 0.45 | 7.55 | 8 × M5 | 0.79 |

All dimensions in [inch]

**Transmitter remote version, connection housing (II2GD/Zone 1)**

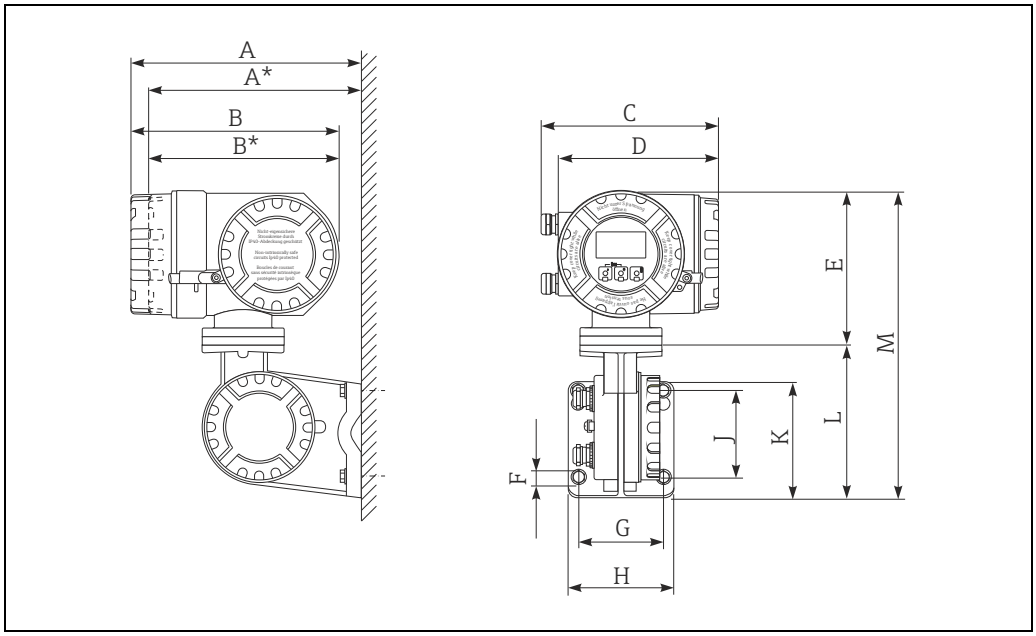


A0002128

*Dimensions (SI units)*

| A | A* | B | B* | C | D | E | Ø F | G | H | J | K | L | M |
|---|---|---|---|---|---|---|---|---|---|---|---|---|---|
| 265 | 242 | 240 | 217 | 206 | 186 | 178 | 8.6 (M8) | 100 | 130 | 100 | 144 | 170 | 355 |

All dimensions in [mm]

*Dimensions (US units)*

| A | A* | B | B* | C | D | E | Ø F | G | H | J | K | L | M |
|---|---|---|---|---|---|---|---|---|---|---|---|---|---|
| 10.4 | 9.53 | 9.45 | 8.54 | 8.11 | 7.32 | 7.01 | 0.34 (M8) | 3.94 | 5.12 | 3.94 | 5.67 | 6.69 | 14.0 |

All dimensions in [inch]

There is a separate mounting kit for the wall-mounted housing. It can be ordered from Endress+Hauser as an accessory. The following installation variants are possible:
- Panel-mounted installation
- Pipe mounting

*Installation in control panel*

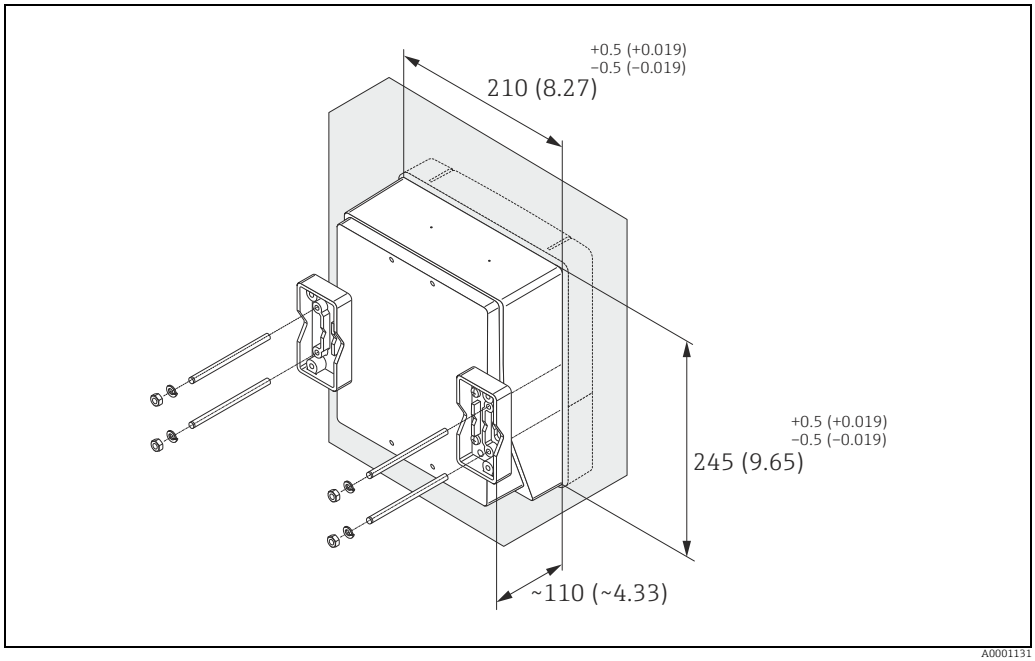


*Engineering unit mm (in)*

*Pipe mounting*

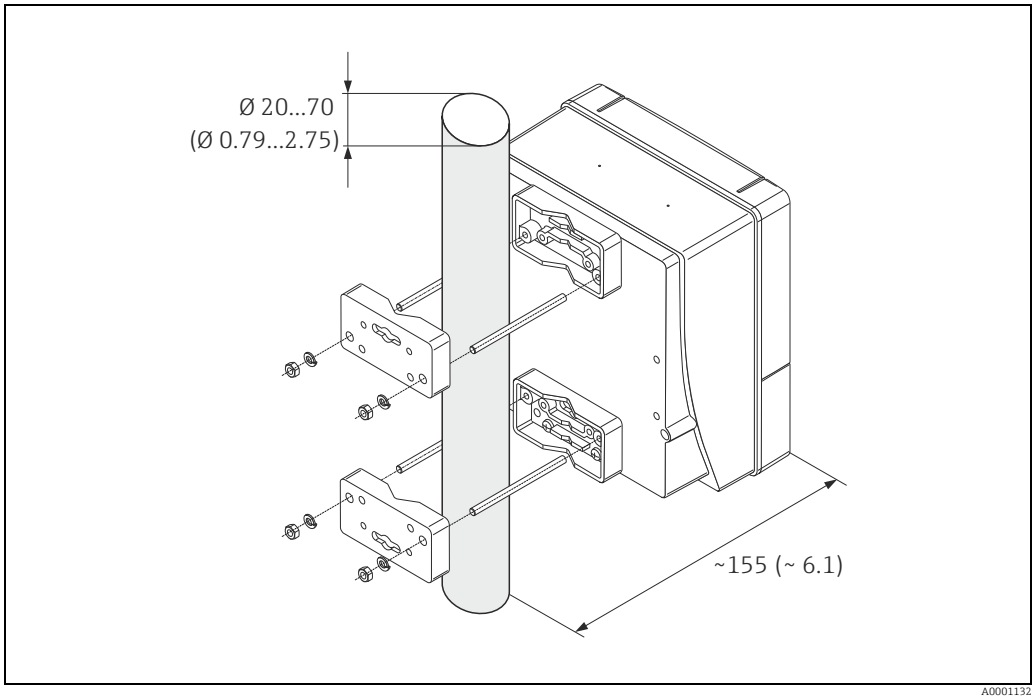


*Engineering unit mm (in)*

**Compact version DN ≤ 300 (12")**

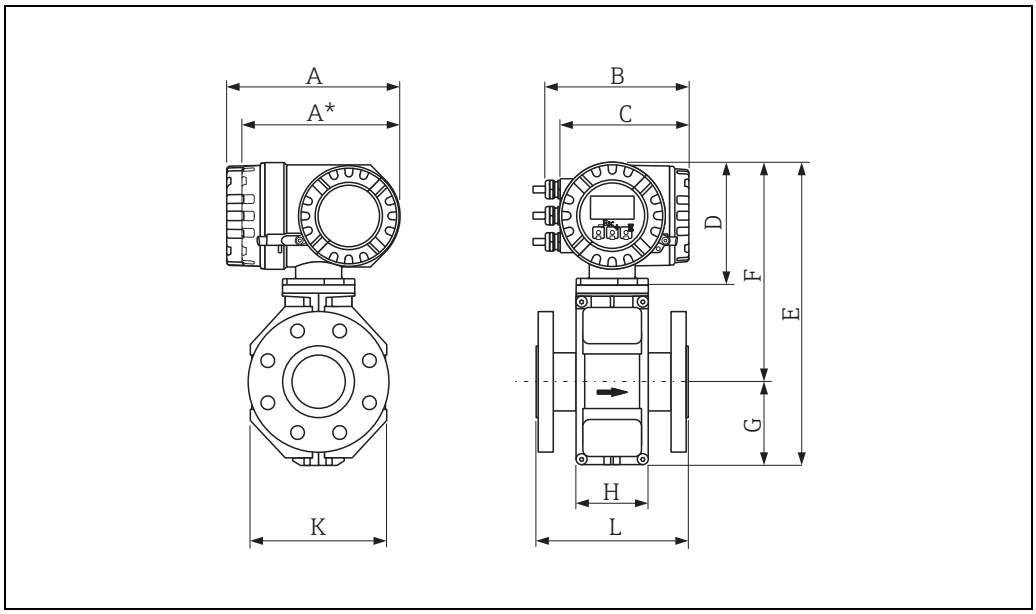


A0005423

*Dimensions (SI units)*

| DN<br>EN (DIN) / JIS / AS [2] | L [1] | A | A* | B | C | D | E | F | G | H | K |
|---|---|---|---|---|---|---|---|---|---|---|---|
| 25 | 200 | 227 | 207 | 187 | 168 | 160 | 341 | 257 | 84 | 94 | 120 |
| 32 | 200 | | | | | | 341 | 257 | 84 | 94 | 120 |
| 40 | 200 | | | | | | 341 | 257 | 84 | 94 | 120 |
| 50 | 200 | | | | | | 341 | 257 | 84 | 94 | 120 |
| 65 | 200 | | | | | | 391 | 282 | 109 | 94 | 180 |
| 80 | 200 | | | | | | 391 | 282 | 109 | 94 | 180 |
| 100 | 250 | | | | | | 391 | 282 | 109 | 94 | 180 |
| 125 | 250 | | | | | | 472 | 322 | 150 | 140 | 260 |
| 150 | 300 | | | | | | 472 | 322 | 150 | 140 | 260 |
| 200 | 350 | | | | | | 527 | 347 | 180 | 156 | 324 |
| 250 | 450 | | | | | | 577 | 372 | 205 | 166 | 400 |
| 300 | 500 | | | | | | 627 | 397 | 230 | 166 | 460 |

[1] The length is regardless of the pressure rating selected. Fitting length to DVGW.
[2] For flanges to AS, only the nominal diameters DN 80, 100 and 150 to 300 are available.
All dimensions in [mm]

*Dimensions (US units)*

| DN ASME | L [1] | A | A* | B | C | D | E | F | G | H | K |
|---|---|---|---|---|---|---|---|---|---|---|---|
| 1" | 7.87 | 8.94 | 8.15 | 7.36 | 6.61 | 6.30 | 13.4 | 10.1 | 3.31 | 3.70 | 4.72 |
| 1½" | 7.87 | | | | | | 13.4 | 10.1 | 3.31 | 3.70 | 4.72 |
| 2" | 7.87 | | | | | | 13.4 | 10.1 | 3.31 | 3.70 | 4.72 |
| 3" | 7.87 | | | | | | 15.4 | 11.1 | 4.29 | 3.70 | 7.09 |
| 4" | 9.84 | | | | | | 15.4 | 11.1 | 4.29 | 3.70 | 7.09 |
| 6" | 11.8 | | | | | | 18.6 | 12.7 | 5.91 | 5.51 | 10.2 |
| 8" | 13.8 | | | | | | 20.8 | 13.7 | 7.09 | 6.14 | 12.8 |
| 10" | 17.7 | | | | | | 22.7 | 14.7 | 8.07 | 6.14 | 15.8 |
| 12" | 19.7 | | | | | | 24.7 | 15.6 | 9.06 | 6.54 | 18.1 |

[1] The length is regardless of the pressure rating selected. Fitting length to DVGW.
All dimensions in [inch]

**Compact version DN ≥ 350 (14")**

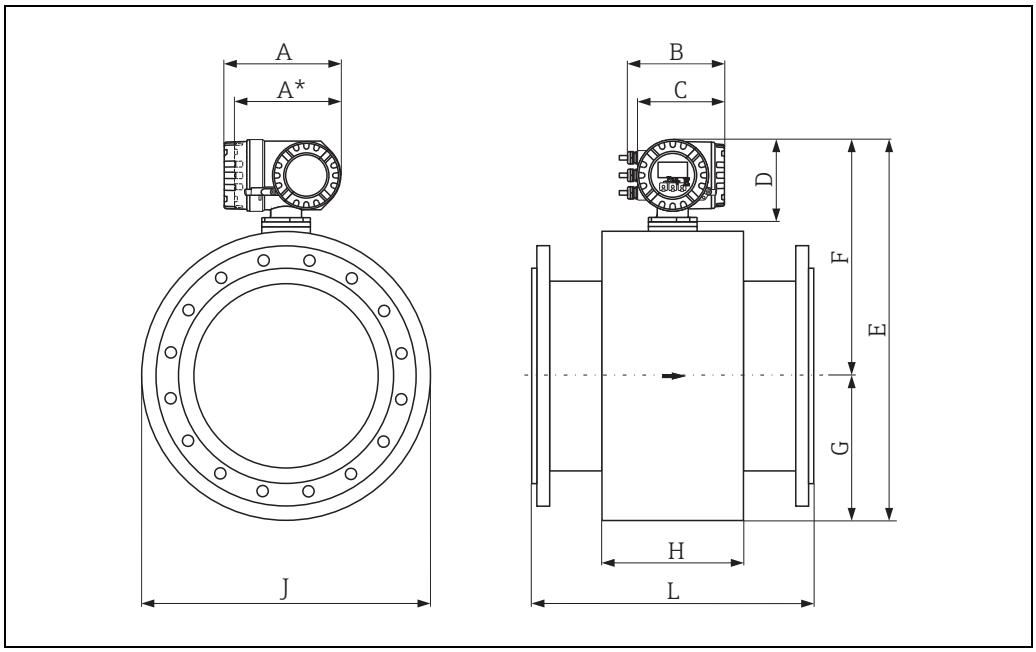


A0005424

*Dimensions (SI units)*

| DN<br>EN (DIN) / AS [2] | L [1] | A | A* | B | C | D | E | F | G | H | J |
|---|---|---|---|---|---|---|---|---|---|---|---|
| 350 | 550 | 227 | 207 | 187 | 168 | 160 | 738.5 | 456.5 | 282.0 | 288 | 564 |
| 375 | 600 | | | | | | 790.5 | 482.5 | 308.0 | 288 | 616 |
| 400 | 600 | | | | | | 790.5 | 482.5 | 308.0 | 288 | 616 |
| 450 | 650 | | | | | | 840.5 | 507.5 | 333.0 | 292 | 666 |
| 500 | 650 | | | | | | 891.5 | 533.0 | 358.5 | 292 | 717 |
| 600 | 780 | | | | | | 995.5 | 585.0 | 410.5 | 402 | 821 |
| 700 | 910 | | | | | | 1198.5 | 686.5 | 512.0 | 589 | 1024 |
| 750 | 975 | | | | | | 1198.5 | 686.5 | 512.0 | 626 | 1024 |
| 800 | 1040 | | | | | | 1241.5 | 708.5 | 533.5 | 647 | 1067 |
| 900 | 1170 | | | | | | 1394.5 | 784.5 | 610.0 | 785 | 1220 |
| 1000 | 1300 | | | | | | 1546.5 | 860.5 | 686.0 | 862 | 1372 |
| 1050 | 1365 | | | | | | 1598.5 | 886.5 | 712.0 | 912 | 1424 |
| 1200 | 1560 | | | | | | 1796.5 | 985.5 | 811.0 | 992 | 1622 |
| 1350 | 1755 | | | | | | 1998.5 | 1086.5 | 912.0 | 1252 | 1824 |
| 1400 | 1820 | | | | | | 2148.5 | 1161.5 | 987.0 | 1252 | 1974 |
| 1500 | 1950 | | | | | | 2196.5 | 1185.5 | 1011.0 | 1392 | 2022 |
| 1600 | 2080 | | | | | | 2286.5 | 1230.5 | 1056.0 | 1482 | 2112 |
| 1650 | 2145 | | | | | | 2360.5 | 1267.5 | 1093.0 | 1482 | 2186 |
| 1800 | 2340 | | | | | | 2550.5 | 1362.5 | 1188.0 | 1632 | 2376 |
| 2000 | 2600 | | | | | | 2650.5 | 1412.5 | 1238.0 | 1732 | 2476 |

[1] The length is regardless of the pressure rating selected. Fitting length to DVGW.
[2] For flanges to AS, only DN 350, 400, 500 and 600 are available.
All dimensions in [mm]

*Dimensions (US units)*

| DN ASME / AWWA [2] | L [1] | A | A* | B | C | D | E | F | G | H | J |
|---|---|---|---|---|---|---|---|---|---|---|---|
| 14" | 21.6 | 8.94 | 8.15 | 7.36 | 6.61 | 6.30 | 29.1 | 17.9 | 11.1 | 11.3 | 22.2 |
| 15" | 23.6 | | | | | | 31.1 | 18.9 | 12.1 | 11.3 | 24.2 |
| 16" | 23.6 | | | | | | 31.1 | 18.9 | 12.1 | 11.3 | 24.2 |
| 18" | 25.6 | | | | | | 33.1 | 19.9 | 13.1 | 11.5 | 26.2 |
| 20" | 25.6 | | | | | | 35.1 | 20.9 | 14.1 | 11.5 | 28.2 |
| 24" | 30.7 | | | | | | 39.2 | 23.0 | 16.2 | 15.8 | 32.3 |
| 28" | 35.8 | | | | | | 47.2 | 27.0 | 20.1 | 23.2 | 40.3 |
| 30" | 38.4 | | | | | | 47.2 | 27.0 | 20.1 | 24.6 | 40.3 |
| 32" | 40.9 | | | | | | 48.9 | 27.9 | 21.0 | 25.5 | 42.0 |
| 36" | 46.0 | | | | | | 54.9 | 30.9 | 24.0 | 30.9 | 48.0 |
| 40" | 51.2 | | | | | | 60.9 | 33.9 | 27.0 | 33.9 | 54.0 |
| 42" | 53.7 | | | | | | 62.9 | 34.9 | 28.0 | 35.9 | 56.0 |
| 48" | 61.4 | | | | | | 71.7 | 38.8 | 31.9 | 39.0 | 63.8 |
| 54" | 69.1 | | | | | | 78.7 | 42.8 | 35.9 | 42.3 | 71.8 |
| 56" | 71.7 | | | | | | 84.6 | 45.7 | 38.9 | 49.3 | 77.7 |
| 60" | 76.8 | | | | | | 86.5 | 46.7 | 39.8 | 54.8 | 79.6 |
| 64" | 81.9 | | | | | | 90.0 | 48.4 | 41.6 | 58.4 | 83.2 |
| 66" | 84.4 | | | | | | 92.9 | 49.9 | 43.0 | 58.4 | 86.0 |
| 72" | 92.1 | | | | | | 100.4 | 53.6 | 46.8 | 64.2 | 93.5 |
| 78" | 102.3 | | | | | | 104.3 | 55.6 | 48.7 | 68.2 | 97.5 |

[1] The length is regardless of the pressure rating selected. Fitting length to DVGW.
[2] Flanges ≤ 24" only to ASME available, ≥ 28" only to AWWA available.
All dimensions in [inch]

**Sensor, remote version DN ≤ 300 (12")**

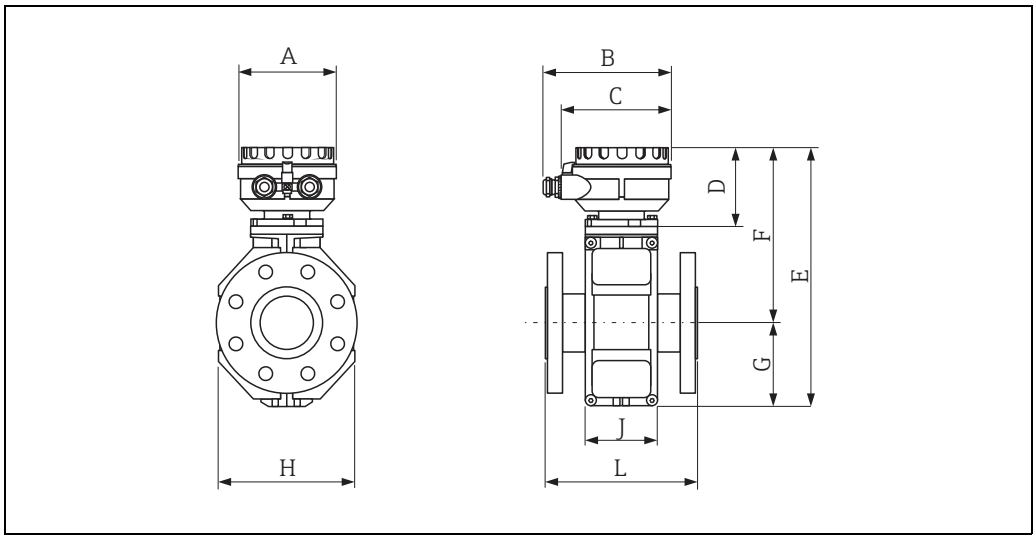


A0012462

*Dimensions (SI units)*

| DN<br>EN (DIN) / JIS / AS [2] | L [1] | A | B | C | D | E | F | G | H | J |
|---|---|---|---|---|---|---|---|---|---|---|
| 25 | 200 | 129 | 163 | 143 | 102 | 286 | 202 | 84 | 120 | 94 |
| 32 | 200 | 129 | 163 | 143 | 102 | 286 | 202 | 84 | 120 | 94 |
| 40 | 200 | 129 | 163 | 143 | 102 | 286 | 202 | 84 | 120 | 94 |
| 50 | 200 | 129 | 163 | 143 | 102 | 286 | 202 | 84 | 120 | 94 |
| 65 | 200 | 129 | 163 | 143 | 102 | 336 | 227 | 109 | 180 | 94 |
| 80 | 200 | 129 | 163 | 143 | 102 | 336 | 227 | 109 | 180 | 94 |
| 100 | 250 | 129 | 163 | 143 | 102 | 336 | 227 | 109 | 180 | 94 |
| 125 | 250 | 129 | 163 | 143 | 102 | 417 | 267 | 150 | 260 | 140 |
| 150 | 300 | 129 | 163 | 143 | 102 | 417 | 267 | 150 | 260 | 140 |
| 200 | 350 | 129 | 163 | 143 | 102 | 472 | 292 | 180 | 324 | 156 |
| 250 | 450 | 129 | 163 | 143 | 102 | 522 | 317 | 205 | 400 | 166 |
| 300 | 500 | 129 | 163 | 143 | 102 | 572 | 342 | 230 | 460 | 166 |

[1] The length is regardless of the pressure rating selected. Fitting length to DVGW.
[2] For flanges to AS, only the nominal diameters DN 80, 100 and 150 to 300 are available.
All dimensions in [mm]

*Dimensions (US units)*

| DN ASME | L [1] | A | B | C | D | E | F | G | H | J |
|---|---|---|---|---|---|---|---|---|---|---|
| 1" | 7.87 | 5.08 | 6.42 | 5.63 | 4.02 | 11.3 | 7.95 | 3.32 | 4.72 | 3.70 |
| 1½" | 7.87 | 5.08 | 6.42 | 5.63 | 4.02 | 11.3 | 7.95 | 3.32 | 4.72 | 3.70 |
| 2" | 7.87 | 5.08 | 6.42 | 5.63 | 4.02 | 11.3 | 7.95 | 3.32 | 4.72 | 3.70 |
| 3" | 7.87 | 5.08 | 6.42 | 5.63 | 4.02 | 13.2 | 8.94 | 4.30 | 7.10 | 3.70 |
| 4" | 9.84 | 5.08 | 6.42 | 5.63 | 4.02 | 13.2 | 8.94 | 4.30 | 7.10 | 3.70 |
| 6" | 11.8 | 5.08 | 6.42 | 5.63 | 4.02 | 16.4 | 10.5 | 5.91 | 10.2 | 5.51 |
| 8" | 13.8 | 5.08 | 6.42 | 5.63 | 4.02 | 18.6 | 11.5 | 7.10 | 12.8 | 6.14 |
| 10" | 17.7 | 5.08 | 6.42 | 5.63 | 4.02 | 20.6 | 12.5 | 8.08 | 15.8 | 6.14 |
| 12" | 19.7 | 5.08 | 6.42 | 5.63 | 4.02 | 22.5 | 13.5 | 9.06 | 18.1 | 6.54 |

[1] The length is regardless of the pressure rating selected. Fitting length to DVGW.
All dimensions in [inch]

**Sensor, remote version DN ≥ 350 (14")**

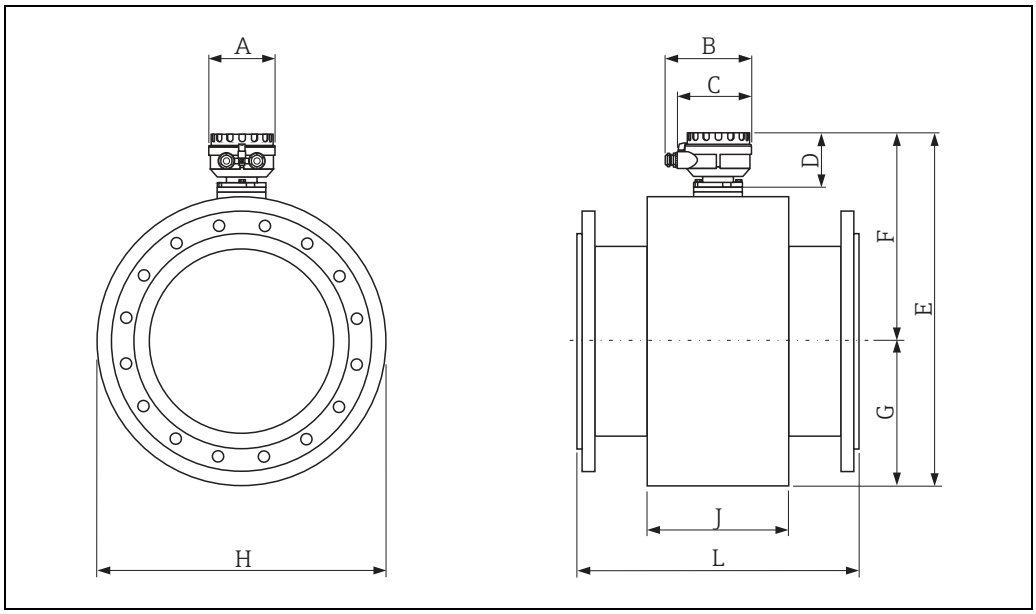


*Dimensions (SI units)*

| DN EN (DIN) / AS [2] | L [1] | A | B | C | D | E | F | G | H | J |
|---|---|---|---|---|---|---|---|---|---|---|
| 350 | 550 | 129 | 163 | 143 | 102 | 683.5 | 401.5 | 282.0 | 564 | 288 |
| 375 | 600 | | | | | 735.5 | 427.5 | 308.0 | 616 | 288 |
| 400 | 600 | | | | | 735.5 | 427.5 | 308.0 | 616 | 288 |
| 450 | 650 | | | | | 785.5 | 452.5 | 333.0 | 666 | 292 |
| 500 | 650 | | | | | 836.5 | 478.0 | 358.5 | 717 | 292 |
| 600 | 780 | | | | | 940.5 | 530.0 | 410.5 | 821 | 402 |
| 700 | 910 | | | | | 1143.5 | 631.5 | 512.0 | 1024 | 589 |
| 750 | 975 | | | | | 1143.5 | 631.5 | 512.0 | 1024 | 626 |
| 800 | 1040 | | | | | 1186.5 | 653.0 | 533.5 | 1067 | 647 |
| 900 | 1170 | | | | | 1339.5 | 729.5 | 610.0 | 1220 | 785 |
| 1000 | 1300 | | | | | 1491.5 | 805.5 | 686.0 | 1372 | 862 |
| 1050 | 1365 | | | | | 1543.5 | 831.5 | 712.0 | 1424 | 912 |
| 1200 | 1560 | | | | | 1741.5 | 930.5 | 811.0 | 1622 | 992 |
| 1350 | 1755 | | | | | 1943.5 | 1031.5 | 912.0 | 1824 | 1252 |
| 1400 | 1820 | | | | | 2093.5 | 1106.5 | 987.0 | 1974 | 1252 |
| 1500 | 1950 | | | | | 2141.5 | 1130.5 | 1011.0 | 2022 | 1392 |
| 1600 | 2080 | | | | | 2231.5 | 1175.5 | 1056.0 | 2112 | 1482 |
| 1650 | 2145 | | | | | 2305.5 | 1212.5 | 1093.0 | 2186 | 1482 |
| 1800 | 2340 | | | | | 2495.5 | 1307.5 | 1188.0 | 2376 | 1632 |
| 2000 | 2600 | | | | | 2595.5 | 1357.5 | 1238.0 | 2476 | 1732 |

[1] The length is regardless of the pressure rating selected. Fitting length to DVGW.
[2] For flanges to AS, only DN 350, 400, 500 and 600 are available.
All dimensions in [mm]

*Dimensions (US units)*

| DN ASME / AWWA [2] | L [1] | A | B | C | D | E | F | G | H | J |
|---|---|---|---|---|---|---|---|---|---|---|
| 14" | 21.6 | 5.08 | 6.42 | 5.63 | 4.02 | 29.1 | 15.8 | 11.1 | 22.2 | 11.3 |
| 15" | 23.6 | | | | | 31.1 | 16.8 | 12.1 | 24.2 | 11.3 |
| 16" | 23.6 | | | | | 31.1 | 16.8 | 12.1 | 24.2 | 11.3 |
| 18" | 25.6 | | | | | 33.1 | 17.8 | 13.1 | 26.2 | 11.5 |
| 20" | 25.6 | | | | | 35.1 | 18.8 | 14.1 | 28.2 | 11.5 |
| 24" | 30.7 | | | | | 39.2 | 20.9 | 16.2 | 32.3 | 15.8 |
| 28" | 35.8 | | | | | 45.0 | 24.9 | 20.1 | 40.3 | 23.2 |
| 30" | 38.4 | | | | | 45.0 | 24.9 | 20.1 | 40.3 | 24.6 |
| 32" | 40.9 | | | | | 46.7 | 25.7 | 21.0 | 42.0 | 25.5 |
| 36" | 46.0 | | | | | 52.7 | 28.7 | 24.0 | 48.0 | 30.9 |
| 40" | 51.2 | | | | | 58.7 | 31.7 | 27.0 | 54.0 | 33.9 |
| 42" | 53.7 | | | | | 60.7 | 32.7 | 28.0 | 56.0 | 35.9 |
| 48" | 61.4 | | | | | 68.5 | 36.6 | 31.9 | 63.8 | 39.0 |
| 54" | 69.1 | | | | | 76.5 | 40.6 | 35.9 | 71.8 | 42.3 |
| 56" | 71.7 | | | | | 82.4 | 43.6 | 38.9 | 77.7 | 49.3 |
| 60" | 76.8 | | | | | 84.3 | 44.5 | 39.8 | 79.6 | 54.8 |
| 64" | 81.9 | | | | | 87.9 | 46.3 | 41.6 | 83.2 | 58.4 |
| 66" | 84.4 | | | | | 90.8 | 47.7 | 43.0 | 86.0 | 58.4 |
| 72" | 92.1 | | | | | 98.2 | 51.5 | 46.8 | 93.5 | 64.2 |
| 78" | 102.3 | | | | | 102.2 | 53.4 | 48.7 | 97.5 | 68.2 |

[1] The length is regardless of the pressure rating selected. Fitting length to DVGW.
[2] Flanges ≤ 24" only to ASME available, ≥ 28" only to AWWA available.
All dimensions in [inch]

**Ground disk for flange connections**

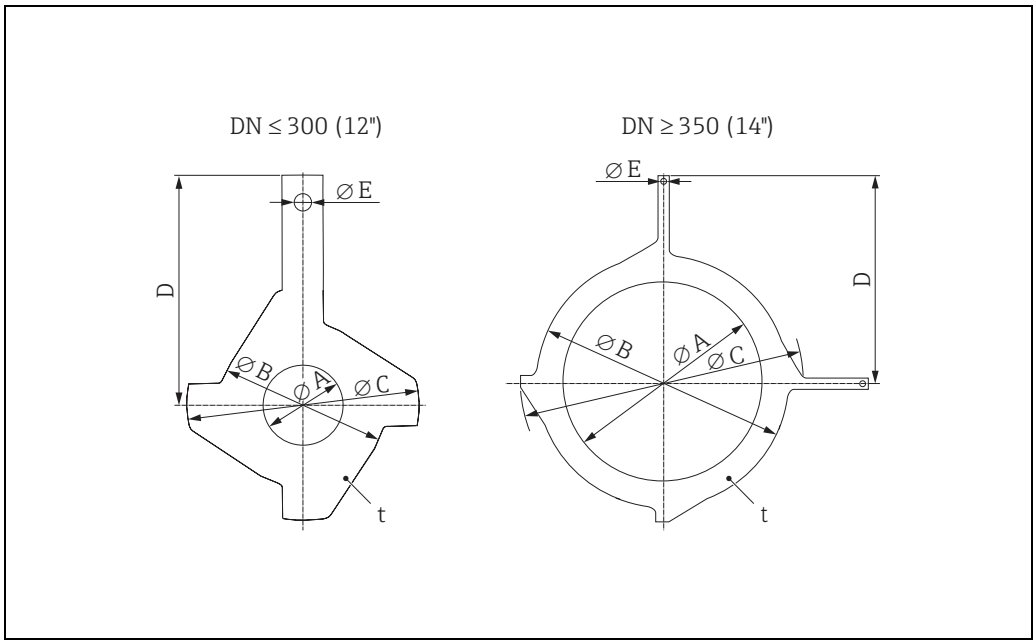


A0003221

*Dimensions (SI units)*

| DN [1] EN (DIN) / JIS / AS [2] | A | B | C | D | E | t |
|---|---|---|---|---|---|---|
| 25 | 26 | 62 | 77.5 | 87.5 | 6.5 | 2 |
| 32 | 35 | 80 | 87.5 | 94.5 | | |
| 40 | 41 | 82 | 101 | 103 | | |
| 50 | 52 | 101 | 115.5 | 108 | | |
| 65 | 68 | 121 | 131.5 | 118 | | |
| 80 | 80 | 131 | 154.5 | 135 | | |
| 100 | 104 | 156 | 186.5 | 153 | | |
| 125 | 130 | 187 | 206.5 | 160 | | |
| 150 | 158 | 217 | 256 | 184 | | |
| 200 | 206 | 267 | 288 | 205 | | |
| 250 | 260 | 328 | 359 | 240 | | |
| 300 [3] | 312 | 375 | 413 | 273 | | |
| 300 [4] | 310 | 375 | 404 | 268 | | |
| 350 [3] | 343 | 433 | 479 | 365 | 9.0 | |
| 375 [3] | 393 | 480 | 542 | 395 | | |
| 400 [3] | 393 | 480 | 542 | 395 | | |
| 450 [3] | 439 | 538 | 583 | 417 | | |
| 500 [3] | 493 | 592 | 650 | 460 | | |
| 600 [3] | 593 | 693 | 766 | 522 | | |

[1] Ground disks can be used for all flange standards/pressure ratings that can be delivered, except for DN ≥ 300.
[2] Only DN 32, 40, 65 and 125 are available for flanges according to AS.
[3] PN 10/16
[4] PN 25, JIS 10K/20K
All dimensions in [mm]

*Dimensions (US units)*

| DN [1] ASME | A | B | C | D | E | t |
|---|---|---|---|---|---|---|
| 1" | 1.02 | 2.44 | 3.05 | 3.44 | 0.26 | 0.08 |
| 1½" | 1.61 | 3.23 | 3.98 | 4.06 | | |
| 2" | 2.05 | 3.98 | 4.55 | 4.25 | | |
| 3" | 3.15 | 5.16 | 6.08 | 5.31 | | |
| 4" | 4.09 | 6.14 | 7.34 | 6.02 | | |
| 6" | 6.22 | 8.54 | 10.08 | 7.24 | | |
| 8" | 8.11 | 10.5 | 11.3 | 8.07 | | |
| 10" | 10.2 | 12.9 | 14.1 | 9.45 | | |
| 12" | 12.3 | 14.8 | 16.3 | 10.8 | | |
| 14" | 13.5 | 17.1 | 18.9 | 14.4 | 0.35 | |
| 15" | 15.45 | 18.9 | 21.3 | 15.6 | | |
| 16" | 15.45 | 18.9 | 21.3 | 15.6 | | |
| 18" | 17.3 | 21.2 | 23.0 | 16.4 | | |
| 20" | 19.4 | 23.3 | 25.6 | 18.1 | | |
| 24" | 23.4 | 27.3 | 30.1 | 20.6 | | |

[1] Ground disks can be used for all flange standards/pressure ratings.
All dimensions in [inch]

**Weight**

*Weight in SI units*

| Weight data in kg | | | | | | | | | | | | |
|---|---|---|---|---|---|---|---|---|---|---|---|---|
| Nominal diameter | | Compact version | | | | | | Remote version (without cable) | | | | |
| | | | | | | | | Sensor | | | | Transmitter |
| [mm] | [inch] | EN (DIN) / AS [1] | | JIS | | ASME / AWWA | | EN (DIN) / AS [1] | | JIS | ASME / AWWA | Wall-mount housing |
| 25 | 1" | PN 40 | 7.3 | 10K | 7.3 | Class 150 | 7.3 | PN 40 | 5.3 | 10K | 5.3 | 6.0 |
| 32 | – | | 8.0 | | 7.3 | | – | | 6.0 | | – | |
| 40 | 1½" | | 9.4 | | 8.3 | | 9.4 | | 7.4 | | 7.4 | |
| 50 | 2" | | 10.6 | | 9.3 | | 10.6 | | 8.6 | | 8.6 | |
| 65 | – | PN 16 | 12 | | 11.1 | | – | PN 16 | 10.0 | | – | |
| 80 | 3" | | 14 | | 112.5 | | 14.0 | | 12.0 | | 12.0 | |
| 100 | 4" | | 16 | | 14.7 | | 16.0 | | 14.0 | | 14.0 | |
| 125 | – | | 21.5 | | 21.0 | | – | | 19.5 | | – | |
| 150 | 6" | | 25.5 | | 24.5 | | 25.5 | | 23.5 | | 23.5 | |
| 200 | 8" | PN 10 | 45 | | 41.9 | | 45 | PN 10 | 43 | | 43 | |
| 250 | 10" | | 65 | | 69.4 | | 75 | | 63 | | 73 | |
| 300 | 12" | | 70 | | 72.3 | | 110 | | 68 | | 108 | |
| 350 | 14" | PN 6 | 105 | | 81.1 | | 175 | PN 6 | 103 | | 173 | |
| 375 | 15" | | 120 | | – | | – | | 118 | | – | |
| 400 | 16" | | 120 | | 102 | | 205 | | 118 | | 203 | |
| 450 | 18" | | 161 | | 130 | | 255 | | 159 | | 253 | |
| 500 | 20" | | 156 | | 144 | | 285 | | 154 | | 283 | |
| 600 | 24" | | 208 | | 190 | | 405 | | 206 | | 403 | |
| 700 | 28" | | 304 | | 282 | Class D | 400 | | 302 | | 398 | |
| – | 30" | | – | | 333 | | 460 | | – | | 458 | |
| 800 | 32" | | 357 | | – | | 550 | | 355 | | 548 | |
| 900 | 36" | | 485 | | – | | 800 | | 483 | | 798 | |
| 1000 | 40" | | 589 | | – | | 900 | | 587 | | 898 | |
| – | 42" | | – | | – | | 1100 | | – | | 1098 | |
| 1200 | 48" | | 850 | | – | | 1400 | | 848 | | 1398 | |
| – | 54" | | – | | – | | 2200 | | – | | 2198 | |
| 1400 | – | | 1300 | | – | | – | | 1298 | | – | |
| – | 60" | | – | | – | | 2700 | | – | | 2698 | |
| 1600 | – | | 1700 | | – | | – | | 1698 | | – | |
| – | 66" | | – | | – | | 3700 | | – | | 3698 | |
| 1800 | 72" | | 2200 | | – | | 4100 | | 2198 | | 4098 | |
| – | 78" | | – | | – | | 4600 | | – | | 4598 | |
| 2000 | – | | 2800 | | – | | – | | 2798 | | – | |

[1] For flanges to AS, only DN 80, 100, 150 to 400, 500 and 600 are available.

- Transmitter (compact version): 3.4 kg
- Weight data valid for standard pressure ratings and without packaging material.

*Weight in US units (only ASME / AWWA)*

| Weight data in lbs | | | | | | |
|---|---|---|---|---|---|---|
| Nominal diameter | | Compact version | | Remote version (without cable) | | |
| | | | | | Sensor | Transmitter |
| [mm] | [inch] | | ASME /AWWA | | ASME / AWWA | Wall-mount housing |
| 25 | 1" | Class 150 | 16.1 | Class 150 | 11.7 | 13.2 |
| 40 | 1½" | | 20.7 | | 16.3 | |
| 50 | 2" | | 23.4 | | 19.0 | |
| 80 | 3" | | 30.9 | | 26.5 | |
| 100 | 4" | | 35.3 | | 30.9 | |
| 150 | 6" | | 56.2 | | 51.8 | |
| 200 | 8" | | 99.2 | | 94.8 | |
| 250 | 10" | | 165.4 | | 161.0 | |
| 300 | 12" | | 242.6 | | 238.1 | |
| 350 | 14" | | 385.9 | | 381.5 | |
| 400 | 16" | | 452.0 | | 447.6 | |
| 450 | 18" | | 562.3 | | 557.9 | |
| 500 | 20" | | 628.4 | | 624.0 | |
| 600 | 24" | | 893.0 | | 888.6 | |
| 700 | 28" | Class D | 882.0 | Class D | 877.6 | |
| – | 30" | | 1014.3 | | 1009.9 | |
| 800 | 32" | | 1212.8 | | 1208.3 | |
| 900 | 36" | | 1764.0 | | 1759.6 | |
| 1000 | 40" | | 1984.5 | | 1980.1 | |
| – | 42" | | 2425.5 | | 2421.1 | |
| 1200 | 48" | | 3087.0 | | 3082.6 | |
| – | 54" | | 4851.0 | | 4846.6 | |
| – | 60" | | 5953.5 | | 5949.1 | |
| – | 66" | | 8158.5 | | 8154.1 | |
| 1800 | 72" | | 9040.5 | | 9036.1 | |
| – | 78" | | 10143.0 | | 10138.6 | |

- Transmitter (compact version): 7.5 lbs
- Weight data valid for standard pressure ratings and without packaging material.

**Measuring tube specifications**

| Diameter | | Pressure rating | | | | | | Internal diameter | | | |
|---|---|---|---|---|---|---|---|---|---|---|---|
| | | EN (DIN) | AS 2129 | AS 4087 | ASME | AWWA | JIS | Hard rubber | | Polyurethane | |
| [mm] | [inch] | [bar] | | | [lbs] | | | [mm] | [inch] | [mm] | [inch] |
| 25 | 1" | PN 40 | – | – | Cl. 150 | – | 20 K | – | – | 24 | 0.94 |
| 32 | – | PN 40 | – | – | – | – | 20 K | – | – | 32 | 1.26 |
| 40 | 1½" | PN 40 | – | – | Cl. 150 | – | 20 K | – | – | 38 | 1.50 |
| 50 | 2" | PN 40 | Table E | PN 16 | Cl. 150 | – | 10 K | 50 | 1.97 | 50 | 1.97 |
| 65 | – | PN 16 | – | – | – | – | 10 K | 66 | 2.60 | 66 | 2.60 |
| 80 | 3" | PN 16 | Table E | PN 16 | Cl. 150 | – | 10 K | 79 | 3.11 | 79 | 3.11 |
| 100 | 4" | PN 16 | Table E | PN 16 | Cl. 150 | – | 10 K | 102 | 4.02 | 102 | 4.02 |
| 125 | – | PN 16 | – | – | – | – | 10 K | 127 | 5.00 | 127 | 5.00 |
| 150 | 6" | PN 16 | Table E | PN 16 | Cl. 150 | – | 10 K | 156 | 6.14 | 156 | 6.14 |
| 200 | 8" | PN 10 | Table E | PN 16 | Cl. 150 | – | 10 K | 204 | 8.03 | 204 | 8.03 |
| 250 | 10" | PN 10 | Table E | PN 16 | Cl. 150 | – | 10 K | 258 | 10.2 | 258 | 10.2 |
| 300 | 12" | PN 10 | Table E | PN 16 | Cl. 150 | – | 10 K | 309 | 12.2 | 309 | 12.2 |
| 350 | 14" | PN 6 | Table E | PN 16 | Cl. 150 | – | 10 K | 342 | 13.5 | 342 | 13.5 |
| 375 | 15" | – | – | PN 16 | – | – | – | 392 | 15.4 | – | – |
| 400 | 16" | PN 6 | Table E | PN 16 | Cl. 150 | – | 10 K | 392 | 15.4 | 392 | 15.4 |
| 450 | 18" | PN 6 | – | – | Cl. 150 | – | 10 K | 437 | 17.2 | 437 | 17.2 |
| 500 | 20" | PN 6 | Table E | PN 16 | Cl. 150 | – | 10 K | 492 | 19.4 | 492 | 19.4 |
| 600 | 24" | PN 6 | Table E | PN 16 | Cl. 150 | – | 10 K | 594 | 23.4 | 594 | 23.4 |
| 700 | 28" | PN 6 | – | – | – | Class D | 10 K | 692 | 27.2 | 692 | 27.2 |
| 750 | 30" | – | – | – | – | Class D | 10 K | 742 | 29.2 | 742 | 29.2 |
| 800 | 32" | PN 6 | – | – | – | Class D | – | 794 | 31.3 | 794 | 31.3 |
| 900 | 36" | PN 6 | – | – | – | Class D | – | 891 | 35.1 | 891 | 35.1 |
| 1000 | 40" | PN 6 | – | – | – | Class D | – | 994 | 39.1 | 994 | 39.1 |
| – | 42" | – | – | – | – | Class D | – | 1043 | 41.1 | 1043 | 41.1 |
| 1200 | 48" | PN 6 | – | – | – | Class D | – | 1197 | 47.1 | 1197 | 47.1 |
| – | 54" | | – | – | – | Class D | – | 1339 | 52.7 | – | – |
| 1400 | – | PN 6 | – | – | – | – | – | 1402 | 55.2 | – | – |
| – | 60" | – | – | – | – | Class D | – | 1492 | 58.7 | – | – |
| 1600 | – | PN 6 | – | – | – | – | – | 1600 | 63.0 | – | – |
| – | 66" | – | – | – | – | Class D | – | 1638 | 64.5 | – | – |
| 1800 | 72" | PN 6 | – | – | – | Class D | – | 1786 | 70.3 | – | – |
| 2000 | 78" | PN 6 | – | – | – | Class D | – | 1989 | 78.3 | – | – |

**Material**

- Transmitter housing
  - Compact housing: powder-coated die-cast aluminum
  - Wall-mount housing: powder-coated die-cast aluminum
- Sensor housing
  - DN 25 to 300 (1 to 12"): powder-coated die-cast aluminum
  - DN 350 to 2000 (14 to 78"): with protective lacquering
- Measuring tube
  - DN ≤ 300 (12"): stainless steel 1.4301 or 1.4306 (304L);
    (for flanges made of carbon steel with Al/Zn protective coating)
  - DN ≥ 350 (14"): stainless steel 1.4301 or 1.4306 (304L);
    (for flanges made of carbon steel with Al/Zn protective coating)
- Electrodes: 1.4435, Alloy C-22, Tantalum
- Flange
  - EN 1092-1 (DIN2501)
    - DN 25 to 3501:
      - Stainless-steel, 1.4571, F316L
      - Carbon steel, S235JRG2, S235JR+N, P250GH, P245GH, E250C, A105
    - DN 350 to 6001:
      - Stainless-steel, 1.4571, F316
      - Carbon steel, P245GH, S235JRG2, S235JR+N, A105, E250C
    - DN > 6001:
      - Stainless-steel, 1.4404, F316L
      - Carbon steel, P245GH, S235JRG2, S235JR+N, P250GH, E250C
  - ASME B16.5
    - DN 25 to 600
      - Stainless-steel, F316L similar to 1.4404
      - Carbon steel, A105
  - AWWA C207: Carbon steel, A105, Cl.70 A181, P265GH, S275JR, E250C
  - JIS B2220:
    - Carbon steel, A105, A350 LF2
    - Stainless steel, F316L

    (DN ≤ 300 (12") with Al/Zn protective coating; DN ≥ 350 (14") with protective lacquering)
  - AS 2129: Carbon steel, A105, P235GH, P265GH, S235JRG2
  - AS 4087: Carbon steel, A105, P265GH, S275JR
- Seals: to DIN EN 1514-1 IBC form
- Ground disks: 1.4435 (316, 316L), Alloy C22, Titanium, Tantalum

1Order code "Design", option A "insertion length short""

**Fitted electrodes**

Measuring electrodes, reference electrodes and empty pipe detection electrodes:
- Standard available with 1.4435, Alloy C-22, tantalum
- Optional: exchangeable measuring electrodes made of 1.4435 (DN 350 to 2000 / 14 to 78")

**Process connections**

Flange connection:
- EN 1092-1 (DIN 2501), DN ≤ 300 (12") form A, DN ≥ 350 (14") form B
  (Dimensions to DIN 2501, DN 65 PN 16 and DN 600 (24") PN 16 exclusively to EN 1092-1)
- ASME B16.5
- AWWA C 207, Class D
- JIS B2220
- AS 2129 Table E
- AS 4087 PN 16

**Surface roughness**

- Electrodes
  - 1.4435, Alloy C-22, tantal: ≤ 0.3 to 0.5 µm (≤ 11.8 to 19.7 µin)

(All data refer to parts in contact with medium)

# Operability

**Local operation**

**Display elements**

- Liquid crystal display: backlit, two lines (Promag 50) or four lines (Promag 53) with 16 characters per line
- Custom configurations for presenting different measured-value and status variables
- Totalizer
  - Promag 50: 2 totalizers
  - Promag 53: 3 totalizers

**Operating elements**

Unified operation concept for both types of transmitter:

Promag 50:
- Local operation via three keys (S, O, F)
- Quick Setup menus for straightforward commissioning

Promag 53:
- Local operation via three keys (S, O, F)
- Application-specific Quick Setup menus for straightforward commissioning

**Language groups**

Language groups available for operation in different countries:

Promag 50, Promag 53:
- Western Europe and America (WEA):
  English, German, Spanish, Italian, French, Dutch, Portuguese
- Eastern Europe and Scandinavia (EES):
  English, Russian, Polish, Norwegian, Finnish, Swedish, Czech
- South and east Asia (SEA):
  English, Japanese, Indonesian

Promag 53:
- China (CN):
  English, Chinese

You can change the language group via the operating program "FieldCare".

**Remote operation**

- Promag 50: Remote control via HART, PROFIBUS DP/PA
- Promag 53: Remote control via HART, PROFIBUS DP/PA, Modbus RS485, FOUNDATION Fieldbus

# Certificates and approvals

**CE mark**

The measuring system is in conformity with the statutory requirements of the EC Directives. Endress+Hauser confirms successful testing of the device by affixing to it the CE mark.

**C-tick symbol**

The measuring system meets the EMC requirements of the "Australian Communications and Media Authority (ACMA)".

**Pressure measuring device approval**

Measuring devices with a nominal diameter smaller than or equal to DN 25 correspond to Article 4 (3) of the EC Directive 2014/68/EU (Pressure Equipment Directive) and have been designed and manufactured according to good engineering practice. Where necessary (depending on the medium and process pressure), there are additional optional approvals to Category II/III for larger nominal diameters.

**Ex approval**

Information about currently available Ex versions (ATEX, IECEx, FM, CSA, NEPSI) can be supplied by your Endress+Hauser Sales Center on request. All explosion protection data are given in a separate documentation which is available upon request.

**Other standards and guidelines**

- EN 60529
  Degrees of protection by housing (IP code)
- EN 61010
  Protection Measures for Electrical Equipment for Measurement, Control, Regulation and Laboratory Procedures.
- IEC/EN 61326
  “Emission in accordance with requirements for Class A”.
  Electromagnetic compatibility (EMC requirements)
- NAMUR NE 21:
  Electromagnetic compatibility (EMC) of industrial process and laboratory control equipment.
- NAMUR NE 43:
  Standardization of the signal level for the breakdown information of digital transmitters with analog output signal.
- NAMUR NE 53:
  Software of field devices and signal-processing devices with digital electronics.
- ANSI/ISA-S82.01
  Safety Standard for Electrical and Electronic Test, Measuring, Controlling and related Equipment - General Requirements Pollution degree 2, Installation Category II.
- CAN/CSA-C22.2 No. 1010.1-92
  Safety requirements for Electrical Equipment for Measurement and Control and Laboratory Use. Pollution degree 2, Installation Category II

**FOUNDATION Fieldbus certification**

The flow device has successfully passed all the test procedures carried out and is certified and registered by the Fieldbus Foundation. The device thus meets all the requirements of the following specifications:

- Certified to FOUNDATION Fieldbus Specification
- The device meets all the specifications of the FOUNDATION Fieldbus H1.
- Interoperability Test Kit (ITK), revision status 5.01 (device certification number: on request)
- The device can also be operated with certified devices of other manufacturers
- Physical Layer Conformance Test of the Fieldbus Foundation

**Modbus RS485 certification**

The measuring device meets all the requirements of the Modbus/TCP conformity test and has the “Modbus/TCP Conformance Test Policy, Version 2.0”. The measuring device has successfully passed all the test procedures carried out and is certified by the “Modbus/TCP Conformance Test Laboratory” of the University
of Michigan.

**PROFIBUS DP/PA certification**

The flow device has successfully passed all the test procedures carried out and is certified and registered by the PNO (PROFIBUS User Organisation). The device thus meets all the requirements of the following specifications:

- Certified to PROFIBUS PA, profile version 3.0 (device certification number: on request)
- The device can also be operated with certified devices of other manufacturers (interoperability)

## Ordering information

Your Endress+Hauser service organization can provide detailed ordering information and information on the order codes on request.

## Accessories

Various accessories, which can be ordered separately from Endress+Hauser, are available for the transmitter and the sensor. Your Endress+Hauser service organization can provide detailed information on the order codes in question.

## Documentation

- Flow Measurement (FA005D/06)
- Operating Instructions Promag 50 (BA046D/06 and BA049D/06)
- Operating Instructions Promag 50 PROFIBUS PA (BA055D/06 and BA056D/06)
- Operating Instructions Promag 53 (BA047D/06 and BA048D/06)
- Operating Instructions Promag 53 FOUNDATION Fieldbus (BA051D/06 and BA052D/06)
- Operating Instructions Promag 53 Modbus RS485 (BA117D/06 and BA118D/06)
- Operating Instructions Promag 53 PROFIBUS DP/PA (BA053D/06 and BA054D/06)
- Supplementary documentation on Ex-ratings: ATEX, IECEx, FM, CSA, NEPSI

## Registered trademarks

HART®
Registered trademark of the HART Communication Foundation, Austin, USA

PROFIBUS®
Registered trademark of the PROFIBUS Nutzerorganisation e.V., Karlsruhe, D

FOUNDATION™ Fieldbus
Registered trademark of the Fieldbus Foundation, Austin, USA

Modbus®
Registered trademark of the Modbus Organisation

HistoROM™, S-DAT®, T-DAT™, F-CHIP®, FieldCare®, Fieldcheck®, FieldXpert™, Applicator®
Registered or registration-pending trademarks of the Endress+Hauser Flowtec Group

www.addresses.endress.com

Endress+Hauser

People for Process Automation