Data Sheet T 8367 EN

Type 4744 Electric Limit Switch

For hazardous areas

CE Ex certified

Application

Limit switch with type of protection ⟨Ex⟩ II 2G Ex de IIC T6 for attachment to pneumatic control valves according to IEC 60534-6-1

Rated travels from 7.5 to 150 mm

The limit switch issues a limit signal whenever the valve travel exceeds or falls below a certain adjusted limit, especially when a valve has reached one of its end positions. This signal is suitable for transferring control signals, for example, to activate visible or audible alarms as well as for connection to centralized control or alarm systems.

Special features

- One or two electric limit switches (possible to override)
- High load capacity, for example, alternating current up to 500 V/10 A
- Attachment to control valves with cast yokes or rod-type yokes according to IEC 60534-6-1 (NAMUR)

Versions

- **Type 4744** (Fig. 1 and Fig. 2)
  - Limit switch with one or two momentary-contact limit switches designed as a position switch conforming to EN 50041.
  - Each contact is equipped with one NC contact and one NO contact, acting as a snap-action switch, which can also be switched as a single pole, double throw switch (SPDT).
  - Type of protection: flameproof enclosure
- **Type 4744-2** (Fig. 3)
  - Limit switch with one momentary-contact switch for mounting to the rod-type yoke of Series V2001 valves.
  - Type of protection: flameproof enclosure

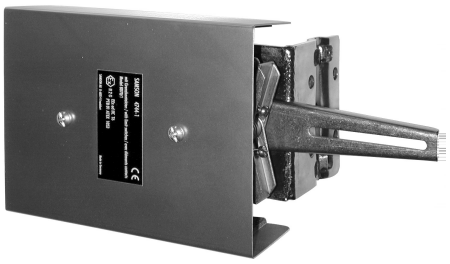

Fig. 1: *Type 4744 Electric Limit Switch with protective cover*

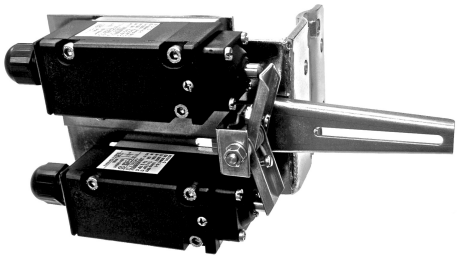

Fig. 2: *Type 4744 Electric Limit Switch with two momentary-contact switches and protective cover removed*

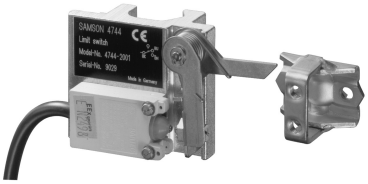

Fig. 3: *Type 4744-2 Electric Limit Switch preferably for Series V2001 Valves*

SAMSON AKTIENGESELLSCHAFT · Weismüllerstraße 3 · 60314 Frankfurt am Main, Germany
Phone: +49 69 4009-0 · Fax: +49 69 4009-1507 · samson@samson.de · www.samson.de

Edition June 2015

Principle of operation

When the limit switch is mounted to the control valve, the valve travel is transmitted by the long lever of the actuator stem to the adjusting lever on the momentary-contact limit switch. This lever actuates the snap-action contact of one of the momentary-contact limit switches when the valve travel reaches the adjusted limit. This switch can be overridden and is equipped with an overrange protection. For the initial adjustment of the limit (switching point), the momentary-contact switch is shifted on the base plate. The adjustment screw is used for fine adjustment. The terminal connection determines whether the limit contact is used either as an NO contact, an NC contact or a double-throw contact (Fig. 4).

For more information on the selection and application of positioners and limit switches, refer to Information Sheet ▶ T 8350.



Fig. 4: *Electrical connection*

Table 1: *Technical data*

Limit switch	Type	4744	4744-2
Momentary-contact switch		1 or 2	1
Type of protection		Flameproof enclosure, terminal space in increased safety	Flameproof enclosure
Load capacity (contact rating)	AC voltage	500 V/10 A Utilization category AC-15	250 V/5 A
	DC voltage	125 V/10 A 250 V/0.2 A Utilization category DC-12	250 V/0.4 A
Travel range		7.5 to 100 mm with extended lever up to max. 150 mm	15 mm
Permissible ambient temperature [1]		–55 to +70 °C	–20 to +75 °C
Compliance		CE	
Degree of protection		IP65	IP66
Weight	kg (approx.)	1.75	0.4
Enclosure material		Glass-fiber-reinforced polyester	Thermosetting polymer
Electrical connections		One M20x1.5 cable gland (for 6 to 13 mm clamping range) Screw terminals 0.2 to 2.5 mm²	3 m connecting cable (6.6 mm outside diameter, wire cross-section: 3x 0.75 mm²)

[1] Observe the limits specified in the relevant certificate additionally when the limit switch is used in hazardous areas.

Table 2: *Summary of explosion protection approvals*

Type	Certification			Type of protection/comments
4744	EC type examination certificate	Number	DMT 01 ATEX E 178	II 2G Ex de IIC T6 Gb II 2D Ex tb IIIC IP65 T80°C
		Date	2015-06-12	
4744-2	EC type examination certificate	Number	PTB 00 ATEX 1093 X	II 2G Ex db IIC T6-T5
		Date	2000-12-07	
4744-3	EC type examination certificate	Number	PTB 01 ATEX 1053	II 2 Ex de IIC T6 Gb
		Date	2001-08-09	
4744-4	EC type examination certificate	Number	LCIE 03 ATEX 6308	II 2D Ex tb IIIC IP6X T80°C
		Date	2003-10-10	

Article code

Electric limit switch	Type 4744-	x	0	0	x	1	0	0	x
Attachment									
To NAMUR rib		1			4/5				1
To rods for Type 3372 Actuator		2			1				
Version									
Without switches			0	0	3				
One changeover switch			0	0	1				
Two 8070/1-2-S switches			0	0	4				1
One 8070/1-2-S switch			0	0	5				1
Special version									
Without									0

Dimensions in mm

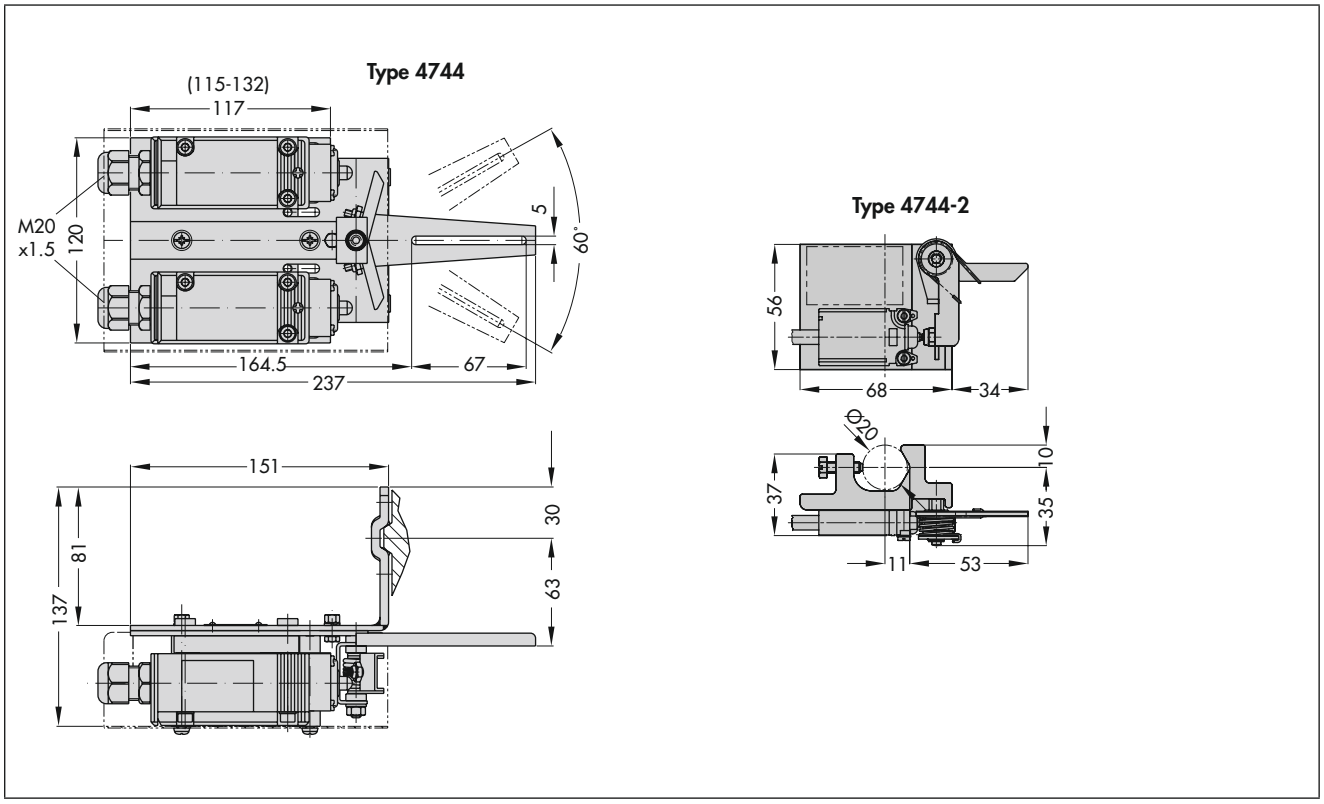

Ordering text

Electric limit switch	Type 4744 or Type 4744-2
Momentary-contact switch	1 or 2 functioning as NO contact or NC contact
For indicating	Valve OPEN/CLOSED or OPEN or CLOSED