DATA SHEET

T 8222-1 EN

Type 3310 Segmented Ball Valve

DIN and ANSI versions

CE

Application

Rotary valve for throttling or on/off service in industrial applications with high flow rates

Nominal size	**DN 25 to 300 · NPS 1 to 12**
Pressure rating	**PN 10 to 40 · Class 150 to 300**
Temperatures	**–46 to +450 °C · –51 to +842 °F**

Special features

Type 3310 Segmented Ball Valve with

- Single-acting AIR TORQUE Type SRP Pneumatic Rotary Actuator
- Double-acting AIR TORQUE Type DAP Pneumatic Rotary Actuator
- Single-acting SAMSON Type 3278 Pneumatic Rotary Actuator ▶ T 8321
- Electric actuator

Valve body made of

- Cast steel
- Cast stainless steel

Segmented ball

- Soft seal
- Metal seal

The control valves can be equipped with various accessories:
Positioners, solenoid valves and other accessories according to VDI/VDE 3845 on AIR TORQUE Type SRP or Type DAP Rotary Actuators and Type 3278 Rotary Actuator. Direct attachment of SAMSON valve accessories to Type 3278 Rotary Actuator.

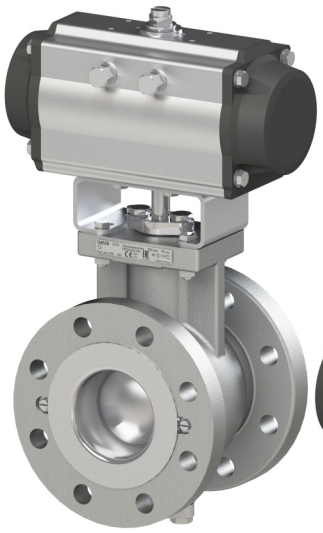

Fig. 1: *Type 3310 Segmented Ball Valve with AIR TORQUE Type SRP/DAP Actuator*

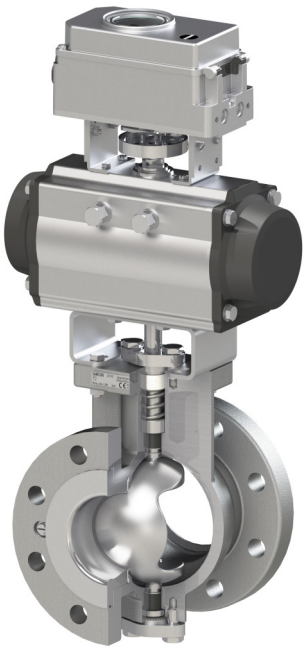

Fig. 2: *Cutaway view of Type 3310 Segmented Ball Valve with AIR TORQUE Type SRP/DAP Actuator and positioner*

Versions

Standard version for temperatures ranging from –29 to +220 °C/–20 to +428 °F, DN 25 to 300/NPS 1 to 12

Further versions:

- With packing certified according to DIN EN ISO 15848-1
- With double packing, with or without leak monitoring
- With insulating section for a wider temperature range
- With flanges with special faces
- With pneumatic rotary actuator and additional handwheel
- With handwheel
- With heating jacket (on request)
- With additional seals for protection of the bearing
- Version for oxygen service (GOX) up to 13.8 bar

SAMSON AKTIENGESELLSCHAFT · Weismüllerstraße 3 · 60314 Frankfurt am Main, Germany
Phone: +49 69 4009-0 · Fax: +49 69 4009-1507
samson@samsongroup.com · www.samsongroup.com

Edition April 2026

– Version according to NACE ISO 15156 or MR0103-2007/ISO 17495-1 (on request)
– Two versions for the food and beverage industry and for the pharmaceuticals and biotechnology sector:
  – Valve with gaskets and packings that comply with the EU Regulation (EC) No. 1935/2004 and the US Regulation FDA 21 CFR Section 177.1550.
  – Valve for cleanroom environments: materials (gaskets, packings, body), manufacture of parts as well as assembly conditions in accordance with the EU Regulation (EC) No. 1935/2004 and the US Regulation FDA 21 CFR Section 177.1550.

Principle of operation

In the segmented ball valve, the medium flows through the retainer located on the convex side of the ball. When the valve is closed, the pressure acts on the convex side of the ball. The flow coefficient is determined by the opening angle of the ball.

To reduce the wear on the body when controlling abrasive media, the direction of flow [1] can be reversed.

Fail-safe position

With the Type SRP and Type 3278 Rotary Actuator the control valve has two fail-safe positions which become effective when the pressure acting on the piston or diaphragm is reduced as well as when the supply air fails:

– **Fail-close valve:** The actuator springs cause the segmented ball valve to close when the supply air fails.
– **Fail-open valve:** The actuator springs cause the segmented ball valve to open when the supply air fails.

The Type DAP Rotary Actuator has no springs. The control valve must be fitted with special accessories to enable the valve to move to a defined end position upon supply air failure.

Valve characteristic selection

The design of the segmented ball allows the same valve to be used with two different types of flow characteristic:

– **Equal percentage (standard)**
– **Linear**

The actuator turns clockwise to close the valve (looking from the actuator toward the valve).

1 Support shaft
3 Bottom flange
7 Segmented ball
21 Seat ring
30 Retainer

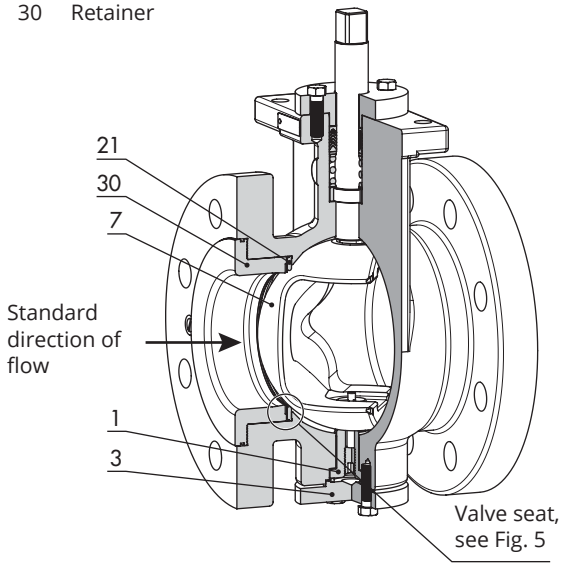

Fig. 3: *Type 3310 Segmented Ball Valve*

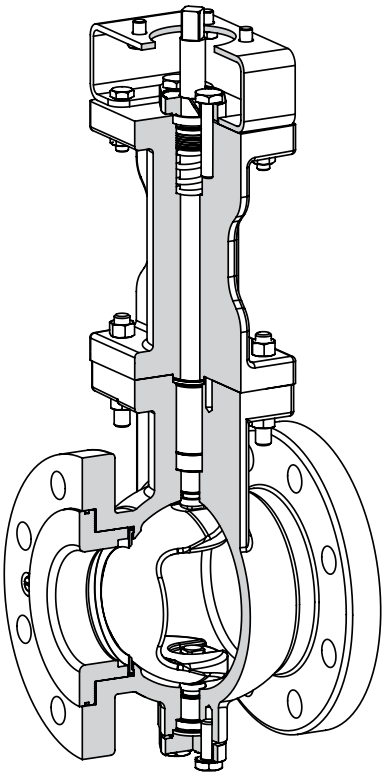

Fig. 4: *Insulating section for Type 3310 Segmented Ball Valve*

[1] Standard direction of flow = FTO, reverse direction = FTC

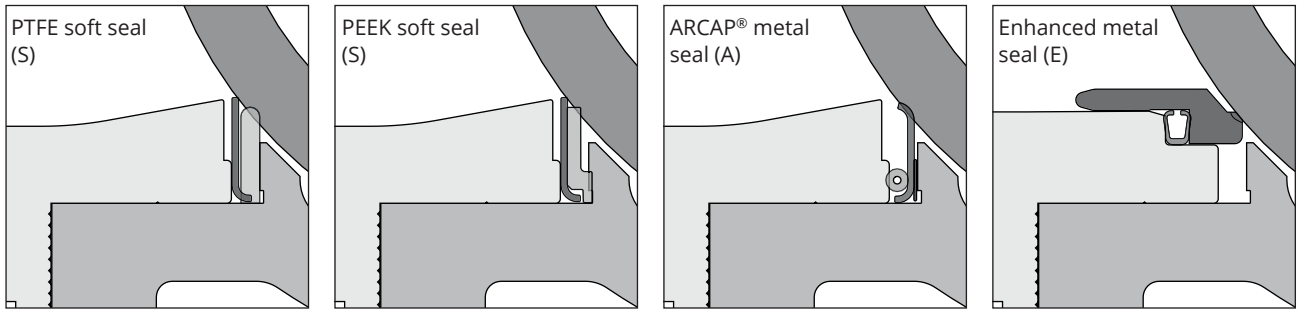

Segmented ball:

Standard	Hardened	Standard	Hardened	Hardened

Fields of application:

• Clean liquids, such as water (clean heating networks, drinking water) • Clean industrial gases, such as air, nitrogen, carbon dioxide, methane) • Chemical fluids without particles	• Liquids and gases containing impurities • Wastewater • Low-pressure dry steam • Low-concentration paper pulp	• Liquids and gases for food and beverage industry (option FDA-EN 1935-2008) • Oxygen gas (option O2)	• High-temperature liquids without cavitation • High-temperature gases	• Steam • Processes involving difficult start-up conditions • Dirty liquids and gases • Liquids containing fibers, paper pulp

Fig. 5: *Valve seats and fields of application*

Table 1: *Technical data*

Valve seat			**Type**	**Soft seal** S		**Metal seal** A	**Metal seal** E
			Version	**PTFE**	**PEEK**	**ARCAP®**	**Enhanced**
			Material	**PTFE**	**PEEK**	**AP1C**	**1.4404/316L and Stellite®**
Pressure rating				PN 10 · 16 · 25 · 40 Class 150/300			
Type of end connections			Flanges	DIN EN 1092 ANSI B16.5			
Leakage class according to ANSI/FCI 70-2				VI	VI	IV	IV
Max. opening angle				90°			
Temperature range	Standard version	DIN	1.0619	–10 to +220 °C (14 to 428 °F)			
			1.4408	–29 to +220 °C (–20 to +428 °F)			
		ANSI	A216 WCC	–29 to +220 °C (–20 to +428 °F)			
			A351 CF8M	–29 to +220 °C (–20 to +428 °F)			
	Version with short insulating section	DIN	1.0619	–10 to +220 °C (14 to 428 °F)	–10 to +220 °C (14 to 428 °F)	–10 to +400 °C [1] (14 to 752 °F [1])	–10 to +315 °C [1] (14 to 599 °F [1])
		ANSI	A216 WCC	–29 to +220 °C (–20 to +428 °F)	–29 to +220 °C (–20 to +428 °F)	–29 to +427 °C [1] (–20 to +800 °F [1])	–29 to +315 °C [1] (–20 to +599 °F [1])
		DIN and ANSI	1.4408	–46 to +220 °C (–51 to +428 °F)	–40 to +220 °C (–40 to +428 °F)	–46 to +450 °C [1] (–51 to +842 °F [1])	–46 to +315 °C [1] (–51 to +599 °F [1])
			A351 CF8M				
Characteristic				Linear or equal percentage			
Rangeability				Equal percentage: R > 400:1 Linear: R > 100:1			
Face-to-face dimension				DIN EN 558-2 Series 36 ISA 75.08.02			
Conformity				CE			

[1] Only for high-temperature versions (T_{max} = 220 °C (428 °F) with standard short insulating section)

Table 2: *Materials for standard version*

Valve body	1.0619		1.4408		A216 WCC		A351 CF8M	
Nominal size	DN 25	DN 40 to 300	DN 25	DN 40 to 300	NPS 1	NPS 1½ to 12	NPS 1	NPS 1½ to 12
Segmented ball [1]	1.4404	1.4409	1.4404	1.4409	316L	CF3M	316L	CF3M
Shaft	DN 150 and NPS 6: AISI 630 · All other valve sizes: 316L							
Bearing bushing	ACTEON® (570)/N26055							
Packing	V-ring packing: PTFE with carbon · Spring: Stainless steel							
Bottom flange	Up to DN 80: 1.4409 DN 100 and larger: 1.0460		Up to DN 80: 1.4409 DN 100 and larger: 1.4404		Up to NPS 3: A351 CF3M NPS 4 and larger: A105		Up to NPS 3: A351 CF3M NPS 4 and larger: 316L	

1) The segmented ball is hardened depending on the seat version (see Fig. 5).

Table 3: *Opening angle and associated C_V and K_{VS} coefficients*

Table 3.1: *C_V coefficients for modified linear characteristic*

Nominal size		Opening angle									
NPS	DN	5°	10°	20°	30°	40°	50°	60°	70°	80°	90°
1	25	0.35	1	3.4	7	11.5	17.3	24.5	32.3	38	40
1½	40	1	3	10	21	35	52	74	97	114	120
2	50	1.4	4	13.6	28	46	69	98	129	152	160
3	80	3.6	10	34	70	115	173	245	323	381	400
4	100	6.3	18	60	123	201	302	429	565	666	700
6	150	13	35	119	245	402	605	858	1130	1333	1400
8	200	18	50	170	350	574	864	1226	1614	1904	2000
10	250	28	78	264	543	890	1339	1900	2502	2951	3100
12	300	28	78	264	543	890	1339	1900	2502	2951	3100

Table 3.2: *K_{VS} coefficients for modified linear characteristic*

Nominal size		Opening angle									
NPS	DN	5°	10°	20°	30°	40°	50°	60°	70°	80°	90°
1	25	0.3	0.85	3	6	10	14.7	20.8	27.4	32.3	34
1½	40	0.85	2.5	8.5	18	30	44	63	82.4	97	102
2	50	1.2	3.4	11.68	24	40	59	84	110	130	140
3	80	3	8.5	29	60	98	148	210	276	325	340
4	100	5.4	15	51	105	172	260	367	482	570	600
6	150	11	30	102	210	344	517	733	965	1140	1200
8	200	15.4	43	145	300	490	738	1048	1380	1630	1700
10	250	24	66	225	464	760	1145	1624	2140	2520	2650
12	300	24	66	225	464	760	1145	1624	2140	2520	2650

Table 3.3: *C_V coefficients for modified equal percentage characteristic (standard)*

Nominal size		Opening angle									
NPS	DN	5°	10°	20°	30°	40°	50°	60°	70°	80°	90°
1	25	0.08	0.16	1.3	3.3	6.3	10.7	16.3	23	32	40
1½	40	0.25	0.5	4	10	19	32	49	69	95	120
2	50	0.3	0.6	5	13	25	42	65	92	126	160
3	80	0.8	1.6	12	32	62	106	162	231	316	400
4	100	1.4	2.8	22	56	109	186	284	405	553	700
6	150	2.8	5.6	43	112	218	371	567	809	1106	1400
8	200	4.0	8	62	160	312	530	810	1156	1580	2000
10	250	6.2	12	96	248	484	822	1256	1792	2449	3100
12	300	6.2	12	96	248	484	822	1256	1792	2449	3100

Table 3.4: *K_{VS} coefficients for modified equal percentage characteristic (standard)*

Nominal size		Opening angle									
NPS	DN	5°	10°	20°	30°	40°	50°	60°	70°	80°	90°
1	25	0.07	0.13	1.1	2.8	5.3	9	14	20	27	34
1½	40	0.21	0.4	3.4	8.5	16	27	42	59	81	102
2	50	0.25	0.5	4	11	21	36	56	79	108	140
3	80	0.7	1.4	10	27	53	91	138	197	270	340
4	100	1.2	2.4	19	48	93	159	243	346	473	600
6	150	2.4	4.8	37	96	186	317	485	691	945	1200
8	200	3.4	6.8	53	137	267	453	692	990	1350	1700
10	250	5.3	10	82	212	414	702	1074	1531	2093	2650
12	300	5.3	10	82	212	414	702	1074	1531	2093	2650

Table 4: *Terms for control valve sizing and noise level calculation*

Table 4.1: *Modified linear characteristic*

	Opening angle									
	5°	10°	20°	30°	40°	50°	60°	70°	80°	90°
F_L	0.95	0.95	0.95	0.94	0.87	0.81	0.73	0.65	0.59	0.57
X_T	0.78	0.78	0.78	0.76	0.65	0.56	0.46	0.36	0.30	0.27
Z	0.39	0.35	0.28	0.23	0.2	0.17	0.14	0.12	0.10	0.09

Table 4.2: *Modified equal percentage characteristic*

	Opening angle									
	5°	10°	20°	30°	40°	50°	60°	70°	80°	90°
F_L	0.95	0.95	0.95	0.95	0.95	0.90	0.82	0.75	0.66	0.57
X_T	0.78	0.78	0.78	0.78	0.78	0.69	0.58	0.49	0.38	0.27
Z	0.44	0.39	0.33	0.29	0.24	0.21	0.18	0.15	0.12	0.09

Table 5: *Permissible differential pressures for Type 3310 Segmented Ball Valve · All pressures stated in bar*

Table 5.1: *Permissible differential pressures for valve CLOSED · For both fail-safe positions · With AIR TORQUE Type SRP Rotary Actuator*

Nominal size		C_V	Shaft Ø in mm	Type SRP ... Actuator	No. of springs	Required supply pressure	Max. supply pressure at			Δp with soft or metal seal	
NPS	DN						20 °C (71 °F)	220 °C (428 °F)	450 °C [1] (842 °F)	With standard direction of flow	With reverse direction of flow
1	25	40	16	60	2/3	2.5	6.9	5.5	4	15	10
					4	4	7.5	6.1	4.5	20	20
				30	5/6	5.5	8	8	8	17	12
1½	40	120	16	100	2/3	2.5	4.8	3.9	2.9	20	17
				60	4	4	7.5	6.1	4.5	20	19
					5/6	5.5	8	6.7	–	20	20
2	50	160	16	150	2/3	2.5	5.6	5	4.4	20	20
				100	4	4	8	7.6	6.6	20	20
				60	5/6	5.5	8	8	8	20	20
3	80	400	16	220	2/3	2.5	3.8	3.5	3.1	20	20
				150	4	4	6.2	5.6	5	20	20
				100	5/6	5.5	8	8	7.2	20	18
4	100	700	25	450	2/3	2.5	6.6	6	5.2	18	15
				300	4	4	8	8	8	18	16
				220	5/6	5.5	8	8	8	20	19

Nominal size		C_V	Shaft Ø in mm	Type SRP ... Actuator	No. of springs	Required supply pressure	Max. supply pressure at			Δp with soft or metal seal	
NPS	DN						20 °C (71 °F)	220 °C (428 °F)	450 °C [1] (842 °F)	With standard direction of flow	With reverse direction of flow
6	150	1400	25	600	3	3	5.5	5	4.4	11	8
					4	4	5.9	5.4	4.8	20	20
				450	5/6	5.5	7.8	7.1	6.3	20	20
				300	5/6	5.5	8	8	8	6	3
8	200	2000	36	1200	2/3	2.5	5	4.5	3.9	9	6
					4	4	5.6	5.1	4.5	20	20
				900	5/6	5.5	7.8	7.1	6.3	20	20
10	250	3100	36	1200	4	4	5.6	5.1	4.5	9	6
					5/6	5.5	6.2	5.7	–	19	16
				900	5/6	5.5	7.8	7.1	6.3	7	5
12	300	3100	36	1200	4	4	5.6	5.1	4.5	9	6
					5/6	5.5	6.2	5.7	–	19	16
				900	5/6	5.5	7.8	7.1	6.3	7	5

[1] Version with insulating section

Table 5.2: *Permissible differential pressures for valve CLOSED · For both fail-safe positions · With Type 3278 Rotary Actuator*

Nominal size		C_V	Shaft Ø in mm	Actuator area in cm²	Bench range [1]	Required supply pressure	Max. supply pressure at		Δp with soft or metal seal	
NPS	DN						20 °C (71 °F)	220 °C (428 °F)	With standard direction of flow	With reverse direction of flow
1	25	40	16	160	0.5 to 1.0	1.5	2.5	2	17	12
					0.8 to 1.6	2.4	3	2.6	20	20
1½	40	120	16	160	0.5 to 1.0	1.5	2.5	2	10	–
					0.8 to 1.6	2.4	3	2.6	20	20
2	50	160	16	160	0.8 to 1.6	2.5	4.5	4.1	20	20
3	80	400	16	160	1.2 to 2.4	3.7	5.2	4.7	7	–
					1.7 to 3.4	5.1	5.8	5.4	20	20
4	100	700	25	320	0.8 to 1.6	2.4	4.8	4.4	9	4
					1.2 to 2.4	3.6	5.4	5	20	20
6	150	1400	25	320	1.7 to 3.4	5.1	6	5.6	12	10

[1] Only applies to standard direction of flow

Table 6: *Permissible shaft and opening torques*

Nominal size		Shaft end	Perm. shaft torque [Nm] at		Valve seat type	Opening torque in Nm at room temperature							
						Standard direction of flow at Δp				Reverse direction of flow at Δp			
NPS	DN		20 °C (71 °F)	220 °C (428 °F)		5 bar	10 bar	15 bar	20 bar	5 bar	10 bar	15 bar	20 bar
1	25	Key drive or square drive	70	54	S	9	9	11	13	10	11	13	15
					A/E	8	9	10	12	9	10	11	13
1½	40	Key drive or square drive	70	54	S	12	12	14	16	13	14	16	18
					A/E	10	11	12	14	11	12	13	15
2	50	Key drive or square drive	125	110	S	14	14	16	18	15	16	18	20
					A/E	11	12	13	15	12	13	14	16
3	80	Key drive or square drive	125	110	S	24	26	28	30	27	29	31	33
					A/E	19	21	24	27	21	23	26	29
4	100	Key drive or square drive	500	440	S	50	60	70	80	55	65	75	85
					A/E	40	45	55	65	45	50	60	70
6	150	Key drive or square drive	500	440	S	100	110	120	130	110	120	130	140
					A/E	70	80	100	120	80	90	110	130
8	200	Square drive	860	750	S	170	190	225	285	190	210	245	305
					A/E	100	145	190	230	110	155	200	240
10	250	Square drive	860	750	S	260	300	350	410	290	330	380	440
					A/E	155	230	305	375	170	245	320	390
12	300	Square drive	860	750	S	260	300	350	410	290	330	380	440
					A/E	155	230	305	375	170	245	320	390

Table 7: *Dimensions and weights of Type 3310 Valves · Dimensions in mm · Weights in kg*

Valve			NPS	1	1½	2	3	4	6	8	10	12
			DN	25	40	50	80	100	150	200	250	300
Face-to-face dimension according to DIN EN 558-2 Series 36 or ISA 75.08.02	Standard – Form B1 – Raised face (DIN) DEM – Form C – Tongue (DIN) DEF – Form D – Groove (DIN) SEM – Form E – Male face (DIN) SEF – Form F – female face (DIN) RF – Raised Face (ASME)	L (Type 21)		102	114	124	165	194	229	243	297	338
	LFF – Large Female Face (ASME) SFF – Small Female Face (ASME) LGF – Large Groove Face (ASME) SGF – Small Groove Face (ASME)	L		112	124	134	175	204	239	253	307	348
	LMF – Large Male Face (ASME) SMF – Small Male Face (ASME) LTF – Large Tongue Face (ASME) STF – Small Tongue Face (ASME)	L		116	128	138	179	208	243	257	311	352
Shaft end diameter		Ø d		16	16	16	16	25	25	36	36	36
Dimensions of square drive on shaft end		SW [1]		12	12	12	12	19	19	27	27	27

Valve				NPS	1	1½	2	3	4	6	8	10	12
				DN	25	40	50	80	100	150	200	250	300
Flange connection according to DIN EN ISO 5211	Type SRP/DAP (AIR TORQUE)		F05	VK14[2]	•	•	•	–	–	–	–	–	–
			F07	VK17[2]	•	•	•	•	–	–	–	–	–
			F10	VK22[2]	–	–	•	•	•	•	–	–	–
			F12	VK27[2]	–	–	–	–	•	•	•	•	•
			F14	VK36[2]	–	–	–	–	•	•	•	•	•
			F16	VK46[2]	–	–	–	–	–	–	•	•	•
	Type 3278		F05	Ø 16	•	•	•	–	–	–	–	–	–
			F07	Ø 16	•	•	•	•	–	–	–	–	–
			F10	Ø 25	–	–	–	–	•	•	–	–	–
			F12	Ø 25	–	–	–	–	•	•	–	–	–
Other dimensions			A		107	117	126	145	170	206	254	281	281
			B		72.2	82.2	91.2	110.2	135.2	171.2	198.7	227.2	227.2
			C		50	50	50	50	55	55	80	80	80
	Type SRP/DAP (AIR TORQUE)		E		15	15	15	18	23	23	35	35	35
	Type 3278				31	31	31	34.3	49.2	49.2	–	–	–
	Insulating section		F		170	170	170	170	253	253	253	253	253
			G		100	100	84	84	130	130	150	150	150
			H		–	–	34	55	58	58	84	84	84
			Ø I		14	14	10.5	10.5	13	13	17	17	17
			Ø J		63	63	63	63	78	78	100	100	100
Weights	Valve	PN 16 B1			6.6	9.5	11.6	18.3	29.6	46.7	73	98	136
		PN 40 B1			6.6	9.5	12.9	20.9	32.8	52.2	91	129	178
		Class 150 RF			6	7.5	10.4	20.5	31.8	47.2	81.8	107	153
		Class 300 RF			7	10	13.4	23.6	39.1	62.1	102	143	201
	Additional weight of insulating section				3.7	3.7	4.4	6.9	16.2	16.2	23.2	23.2	23.2

1) SW = Width across flats
2) VK = Square drive

Table 8: *Dimensions and weights of AIR TORQUE Type SRP/DAP Pneumatic Rotary Actuator · Dimensions in mm · Weights in kg*

Actuator		30	60	100	150	220	300	450	600	900	1200	2000
M1		153.5	203.5	241	259	304	333	394.5	422.5	474	528	605
M2		85	102	115	127	145	157	177	196	220.5	245	298.5
M3		84.5	93	106	118.5	136	146.5	166	181	200	221.5	262
M4		20	20	20	20	30	30	30	30	50	50	50
Flange connection according to DIN EN ISO 5211		F05/ F07	F05/ F07	F05/ F07	F07/ F10	F07/ F10	F07/ F10	F10/ F12	F10/ F12	F14	F14	F16
Weight	Type SRP	1.7	3.1	4.3	6.1	9.3	12	17	22	33	42	67
	Type DAP	1.6	2.7	3.7	5.2	8	9.8	14	18	24	34	53

Table 9: *Dimensions and weights of handwheel ILG-D · Dimensions in mm · Weights in kg*

Handwheel	200	600	900	1500	2400	5000
N1	122	145	160	175	194	209
N2	42	51	56.5	55	62	72
N3	186	217.5	286	349	356	387.5
N4	53.2	64.5	84.5	107.5	127	155
N5	100	200	400	500	600	800
Flange connection according to DIN EN ISO 5211	See valve data in Table 7					
Weight	7.3	17	21	34	54	80

Table 10: *Dimensions and weights of handwheel ILG-S · Dimensions in mm · Weights in kg*

Handwheel	210	550	880	1250
N1	84.5	119	131	149
N2	29.6	40.5	42	48
N3	188	230	270	311
N4	52	71	86	104 ,5
N5	100	200	200	300
Flange connection according to DIN EN ISO 5211	See valve data in Table 7			
Weight	5	10	14	22

Table 11: *Dimensions and weights of handwheel AB · Dimensions in mm · Weights in kg*

Nominal valve size NPS	1 to 2	3	4 to 6	8 to 12
Handwheel	**150**	**210**	**550**	**550**
R1	124	127.5	174	174
R2	80	102	138	138
R3	48.5	54	79	79
R4	42.5	52	71	71
R5	100	200	200	300
R6	115.5	187	230	283
Flange connection according to DIN EN ISO 5211	See valve data in Table 7			
Weight	2.2	3.5	8.5	8.5

Table 12: *Dimensions and weights of Type 3278 Pneumatic Rotary Actuator · Dimensions in mm · Weights in kg*

Actuator	160 cm²	320 cm²
Ø O1	225	295
O2	260	421
O3	332	516
O4	132	183
Ø O5	250	385
O6	120	150
O7	118	162
Flange connection according to DIN EN ISO 5211	F07	F12
Weight	16	50

Dimensional drawings

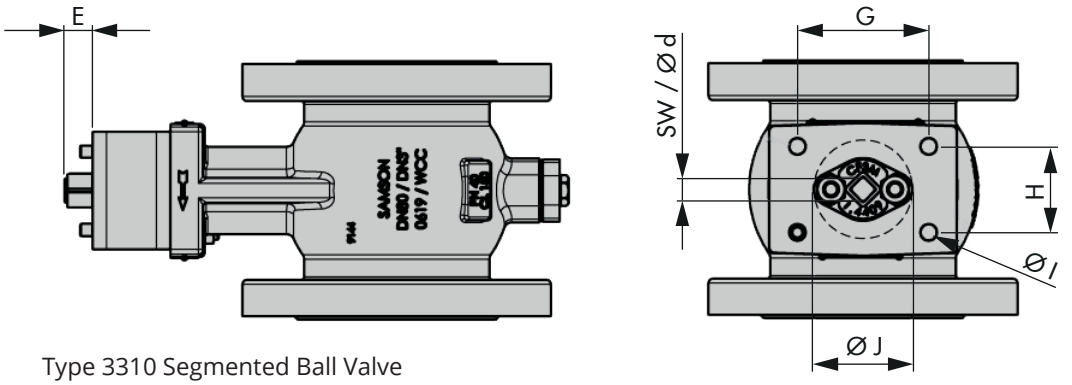

Type 3310 Segmented Ball Valve

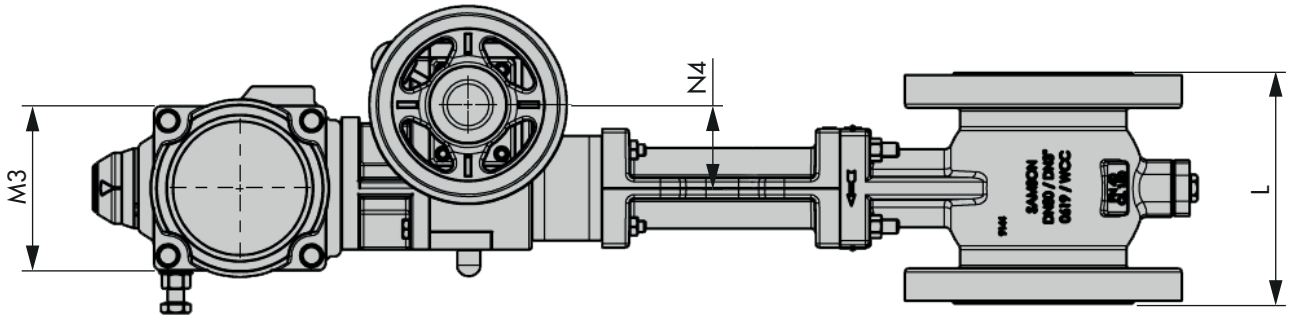

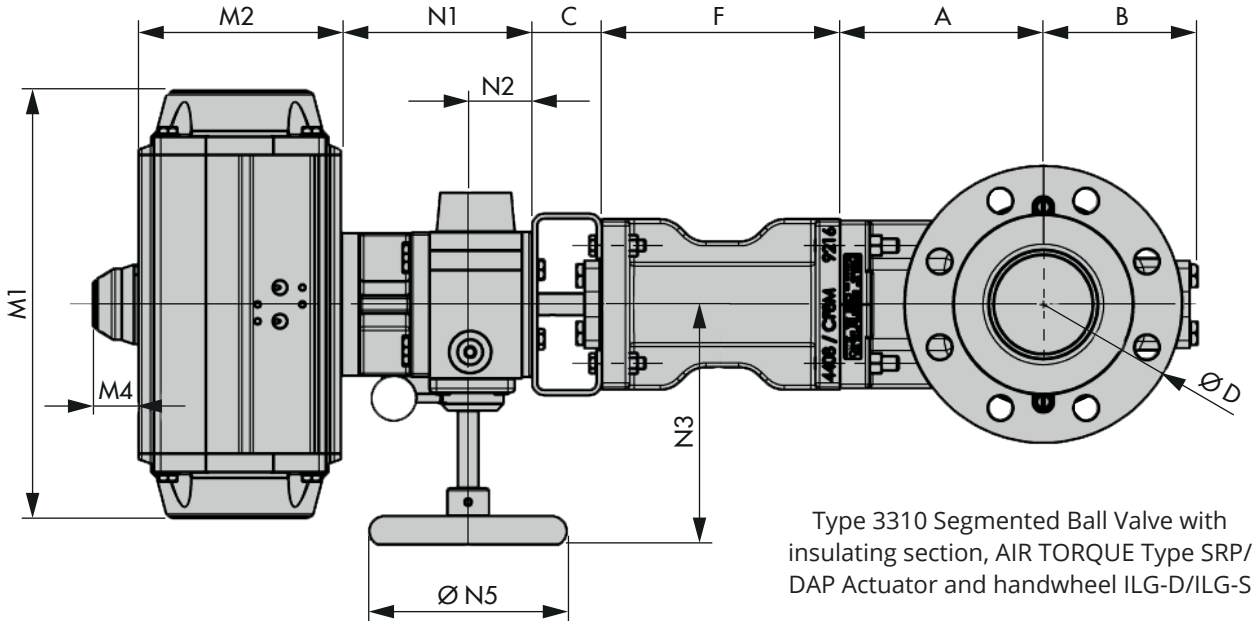

Type 3310 Segmented Ball Valve with insulating section, AIR TORQUE Type SRP/ DAP Actuator and handwheel ILG-D/ILG-S

Dimensional drawings

Type 3310 Segmented Ball Valve with handwheel AB

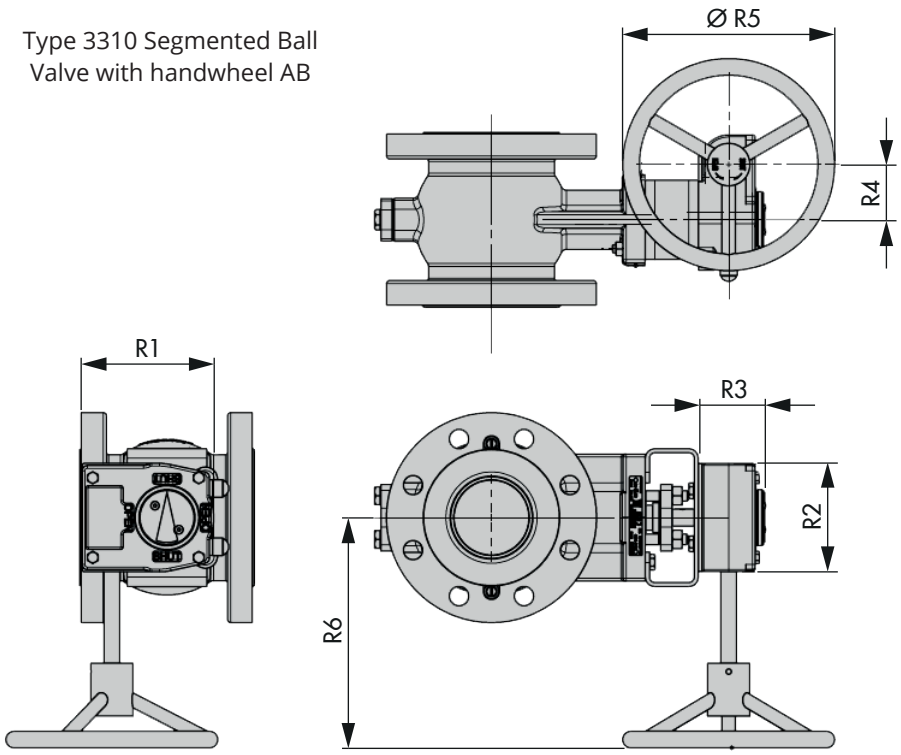

Type 3310 Segmented Ball Valve with Type 3278 Actuator and handwheel

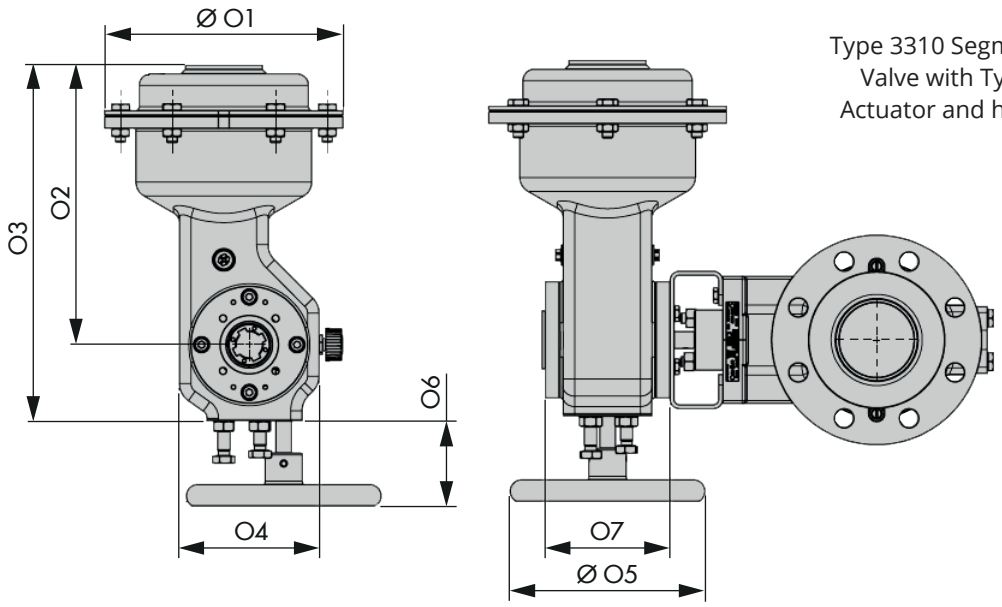

Order numbers

Nominal size	DN .../NPS ...
Pressure rating	PN .../Class ...
Body material	See Table 2
Seal	Metal or soft seal
Characteristic	Equal percentage or linear
Direction of flow	Standard or reverse
Rotary actuator	Type SRP (AIR TORQUE), Type DAP (AIR TORQUE) or Type 3278
Fail-safe position	Fail-close or fail-open
Supply air	... bar
Operating range	Number of springs or bench range
Valve accessories	Positioner and/or limit switch