TI01267F/00/EN/08.20
71492916
2020-08-17

Technical Information
Micropilot FMR20 HART

Free space radar

Level measurement for liquids



Application

- Ingress protection: IP66/68 / NEMA 4X/6P
- Measuring range: up to 20 m (66 ft)
- Process temperature: –40 to 80 °C (–40 to 176 °F)
- Process pressure: –1 to 3 bar (–14 to 43 psi)
- Accuracy: up to ± 2 mm (0.08 in)
- International explosion protection certificates

Your benefits

- Level measurement for liquids in storage tanks, open basins, pump shafts and canal systems
- Radar measuring device with *Bluetooth*® wireless technology and HART communication
- Simple, safe and secure wireless remote access – ideal for installation in hazardous areas or places difficult to reach
- Commissioning, operation and maintenance via free iOS / Android app SmartBlue – saves time and reduces costs
- Full PVDF body - for a long sensor lifetime
- Hermetically sealed wiring and fully potted electronics – eliminates water ingress and allows operation under harsh environmental conditions
- Most compact radar due to unique radar chip design – fits in limited space installations
- Best price-performance-ratio radar

Endress+Hauser
People for Process Automation

Table of contents

Important document information 3
Symbols used 3

Terms and abbreviations 4

Product life cycle 5
Engineering 5
Procurement 5
Installation 5
Commissioning 5
Operation 5
Maintenance 5
Retirement 5

Measuring principle 6
Input 6
Output 6

Input 7
Measured variable 7
Measuring range 7
Operating frequency 7
Transmission power 7

Output 7
Output signal 7
Digital output 7
Signal on alarm 8
Linearization 8

Protocol-specific data, HART 8

Electrical connection 9
Cable assignment 9
Supply voltage 9
Power consumption 9
Current consumption 9
Starting time 9
Power supply failure 10
Connecting the device 10
Cable specification 12
Overvoltage protection 12

Performance characteristics 13
Reference operating conditions 13
Maximum measured error 13
Measured value resolution 13
Response time 13
Influence of ambient temperature 14

Installation 14
Installation conditions 14

Environment 20
Ambient temperature range 20
Storage temperature 20
Climate class 20
Operating altitude as per IEC 61010-1 Ed.3 20
Degree of protection 20
Vibration resistance 20
Electromagnetic compatibility (EMC) 21

Process 22
Process temperature, process pressure 22
Dielectric constant 22

Mechanical construction 23
Dimensions 23
Weight 27
Materials 28
Connecting cable 28

Operability 28
Operating concept 28
Operation via Bluetooth® wireless technology 28
Via HART protocol 29

Certificates and approvals 30
CE mark 30
RoHS 30
EAC conformity 30
RCM-Tick marking 30
Approvals 30
Explosion-protected smartphones and tablets 30
Pressure equipment with allowable pressure
≤ 200 bar (2 900 psi) 30
EN 302729-1/2 radio standard 31
FCC / Industry Canada 31
Japanese Radio Law and Japanese Telecommunications
Business Law Compliance 32
Mexico 33
Other standards and guidelines 33

Ordering information 34

Accessories 34
Device-specific accessories 34
Communication-specific accessories 55
Service-specific accessories 55
System components 56

Supplementary documentation 56
Brief Operating Instructions (KA) 56
Operating Instructions (BA) 56
Safety Instructions (XA) 56

Registered trademarks 57

Important document information

Symbols used

Symbols for certain types of information and graphics

Permitted
Procedures, processes or actions that are permitted

Forbidden
Procedures, processes or actions that are forbidden

Tip
Indicates additional information

Reference to documentation

Reference to graphic

Notice or individual step to be observed

1., 2., 3.
Series of steps

Result of a step

1, 2, 3, ...
Item numbers

A, B, C, ...
Views

Terms and abbreviations

BA
Document type "Operating Instructions"

KA
Document type "Brief Operating Instructions"

TI
Document type "Technical Information"

SD
Document type "Special Documentation"

XA
Document type "Safety Instructions"

PN
Nominal pressure

MWP
MWP (Maximum working pressure/max. process pressure)
The MWP can also be found on the nameplate.

ToF
Time of Flight

FieldCare
Scalable software tool for device configuration and integrated plant asset management solutions

DeviceCare
Universal configuration software for Endress+Hauser HART, PROFIBUS, FOUNDATION Fieldbus and Ethernet field devices

DTM
Device Type Manager

ε_r (Dk value)
Relative dielectric constant

Operating tool

The term "operating tool" is used in place of the following operating software:
- FieldCare / DeviceCare, for operation via HART communication and PC
- SmartBlue (app), for operation using an Android or iOS smartphone or tablet

BD
Blocking Distance; no signals are analyzed within the BD.

PLC
Programmable logic controller (PLC)

Product life cycle

Engineering

- Proven radar measuring technology
- Level measurement and open channel flow measurement for Ex and non-Ex areas
- Flooding detection
- Wide range of installation possibilities and accessories
- Highest degree of ingress protection
- 2D/3D drawings
- Spec Sheet Producer
- Applicator Selection tool for selecting the perfect measurement solution

Device not compatible with transmitters and sensors that use ultrasonic measurement technology (e.g. Prosonic FMU9x, FDU9x)

Procurement

- Best price-performance-ratio radar
- Global availability
- Order code includes variety of mounting accessories and decentralized RIA15 process indicator for HART

Installation

- Rear and front thread for flexible installation
- Slip-on flange for nozzle installation
- Complete measuring point: including mounting accessory, RIA15 and flooding protection tube

Commissioning

- Quick and easy setup with the SmartBlue app and DeviceCare / FieldCare or RIA15
- No additional tools or adapters required
- Local languages (up to 15)

Operation

- Continuous self-monitoring
- Diagnostics information according to NAMUR NE107 with remedial measures in the form of plain text messages
- Signal curve via SmartBlue (app) and DeviceCare / FieldCare
- Encrypted single point-to-point data transmission (tested by Fraunhofer Institute) and password-protected communication via *Bluetooth*® wireless technology

Maintenance

- No maintenance required
- Technical experts on-call around the world

Retirement

- Environmentally responsible recycling concepts
- RoHS compliance (restriction of certain hazardous substances), lead-free soldering of electronic components

Measuring principle

The Micropilot is a "downward-looking" measuring system, which functions according to the time-of-flight (ToF) method. It measures the distance from the reference point **R** to the product surface. Radar pulses are emitted by an antenna, reflected off the product surface and received again by the radar system.

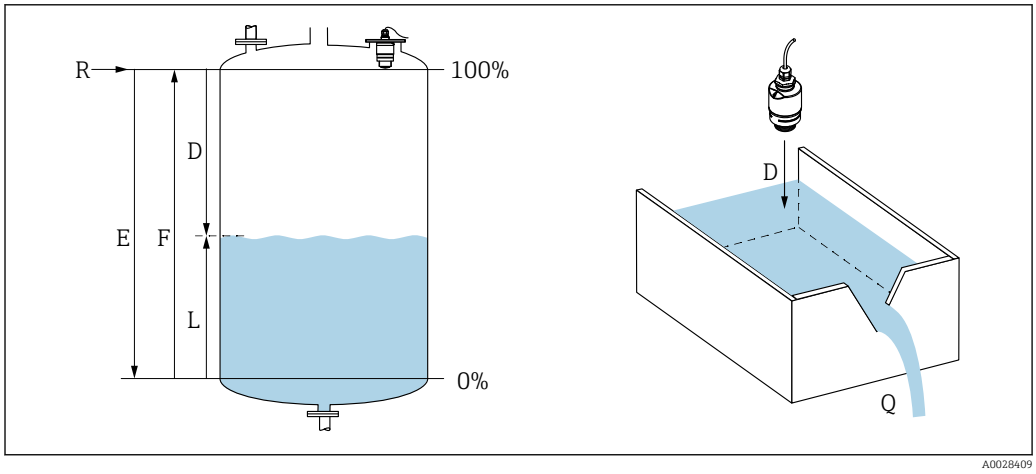

1 *Level / flow calibration parameter*

E *Empty calibration (= zero)*
F *Full calibration (= span)*
D *Measured distance*
L *Level (L = E - D)*
Q *Flow rate at measuring weirs or channels (calculated from the level using linearization)*
R *Reference point*

Input

The reflected radar pulses are received by the antenna and transmitted to the electronics. A microprocessor evaluates the signals and identifies the level echo caused by the reflection of the radar pulses at the product surface. This clear signal detection system benefits from over 30 years' experience with time-of-flight procedures.

The distance **D** to the product surface is proportional to the time of flight **t** of the pulse:

$D = c \cdot t/2$,

where **c** is the speed of light.

Based on the known empty distance **E**, the level **L** is calculated:

$L = E - D$

Output

The Micropilot is calibrated by entering the empty distance **E** (= zero point) and the full distance **F** (= span).

- Current output: 4 to 20 mA
- Digital output (HART, SmartBlue): 0 to 15 m (0 to 49 ft) [1] or 0 to 20 m (0 to 66 ft) depending on antenna version

1) order code 010 (approval) "GA", "GB", "GR": 0 to 10 m (0 to 32.8 ft)

Input

Measured variable

The measured variable is the distance between the reference point and the product surface.

The level is calculated based on **E**, the empty distance entered.

Measuring range

Maximum measuring range

- Device with 40 mm (1.5 in) antenna: 15 m (49 ft) [2)]
- Device with 80 mm (3 in) antenna: 20 m (66 ft)

Installation requirements

- Recommended tank height > 1.5 m (5 ft) for media with low ε_r value
- Open channel minimum width 0.5 m (1.6 ft)
- Calm surfaces
- No agitators
- No buildup
- Relative dielectric constant $\varepsilon_r > 4$
  Contact Endress+Hauser for lower ε_r values

Usable measuring range

The usable measuring range depends on the antenna size, the medium's reflective properties, the installation position and any possible interference reflections.

Media groups
- $\varepsilon_r = 4$ to 10
  e.g. concentrated acid, organic solvents, ester, aniline, alcohol, acetone.
- $\varepsilon_r > 10$
  e.g. conductive liquids, aqueous solutions, diluted acids and bases

Reduction of the maximum possible measuring range by:
- Media with bad reflective properties (= low ε_r value)
- Formation of buildup, particularly of moist products
- Strong condensation
- Foam generation
- Freezing of sensor

Operating frequency

K-band (~ 26 GHz)

Transmission power

Mean power density in the direction of the beam
- At a distance of 1 m (3.3 ft): < 12 nW/cm^2
- At a distance of 5 m (16 ft): < 0.4 nW/cm^2

Output

Output signal

4 to 20 mA

An 4 to 20 mA interface is used for measured value output and to power to the device.

Digital output

HART®

- Signal encoding; FSK ±0.5 mA over current signal
- Data transmission rate;1 200 Bit/s

Bluetooth® wireless technology (available as an optional extra)

The device has a *Bluetooth®* wireless technology interface and can be operated and configured via this interface using the SmartBlue app.

2) order code 010 (approval) "GA", "GB", "GR": 10 m (32.8 ft)

- The range under reference conditions is 25 m (82 ft)
- Incorrect operation by unauthorized persons is prevented by means of encrypted communication and password encryption
- The *Bluetooth*® wireless technology interface can be deactivated

Signal on alarm

Depending on the interface, failure information is displayed as follows:
- Current output
  Alarm current: 22.5 mA (in accordance with NAMUR recommendation NE 43)
- Operating tool via digital communication (HART) or SmartBlue (app)
  - Status signal (as per NAMUR Recommendation NE 107)
  - Plain text display with remedial action

Linearization

The linearization function of the device allows the conversion of the measured value into any unit of length, weight, flow or volume. In DeviceCare and FieldCare, there are preprogrammed linearization tables for volume calculation in vessels.

Pre-programmed linearization curves
- Horizontal cylindrical tank
- Sphere
- Tank with pyramid bottom
- Tank with conical bottom
- Tank with flat bottom

Other linearization tables of up to 32 value pairs can be entered manually.

Protocol-specific data, HART

Manufacturer ID
17 (0x11)

Device type ID
44 (0x112c)

HART specification
7.0

Device description files (DTM)
Information and files under:
- www.endress.com
- www.hartcomm.org

HART load
Min. 250 Ω

HART device variables
Assignment of HART device variables is fixed and cannot be changed.
- **Measured values for PV (primary variable)**
  Level linearized
- **Advanced diag. measured values for SV (secondary variable)**
  Distance
- **Advanced diag. measured values for TV (tertiary variable)**
  Relative echo amplitude
- **Advanced diag. measured values for QV (quarternary variable)**
  Temperature

Supported functions
Additional transmitter status

Multidrop current
4 mA

Time for connection setup
< 1 s

Electrical connection

Cable assignment

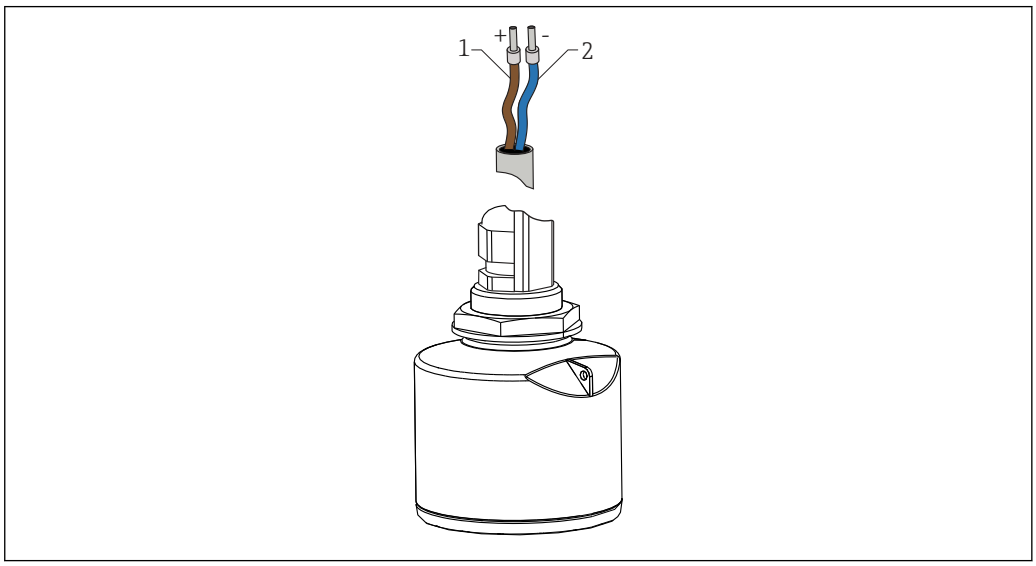

2 *Cable assignment*

1 Plus, brown wire
2 Minus, blue wire

Supply voltage

10.5 to 30 V_{DC}

An external power supply is necessary.

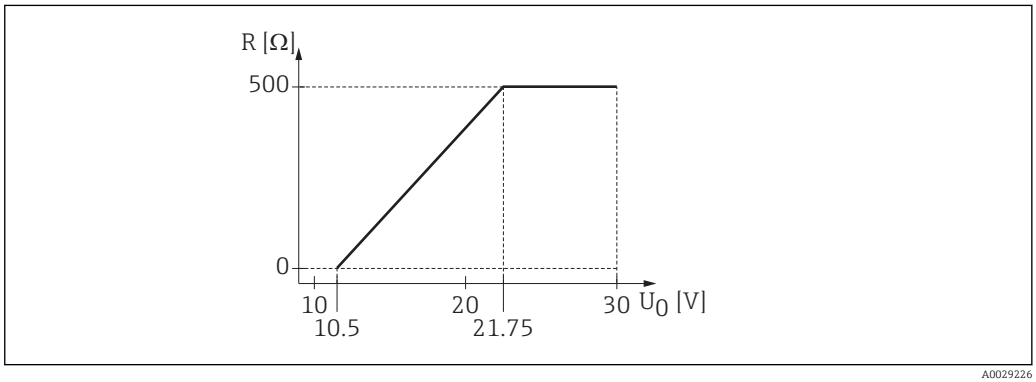

3 *Maximum load R, depending on supply voltage U_0 of power supply unit*

Battery operation
The sensor's *Bluetooth*® wireless technology communication can be disabled to increase the operating life of the battery.

Potential equalization
No special measures for potential equalization are required.

Various power supply units can be ordered as an accessory from Endress+Hauser.

Power consumption

Maximum input power: 675 mW

Current consumption

- Maximum input current: <25 mA
- Maximum start-up current: 3.6 mA

Starting time

First stable measured value after 20 s (with supply voltage = 24 V_{DC})

Power supply failure

The configuration remains stored in the sensor.

Connecting the device

4 to 20 mA HART block diagram

Connection of the device with HART communication, power source and 4 to 20 mA display

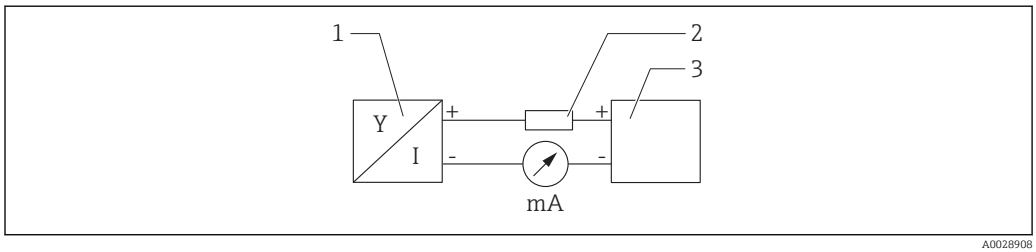

4 *Block diagram of HART connection*

1 Device with HART communication
2 HART resistor
3 Power supply

The HART communication resistor of 250 Ω in the signal line is always necessary in the case of a low-impedance power supply.

The voltage drop to be taken into account is:
Max. 6 V for 250 Ω communication resistor

HART device block diagram, connection with RIA15

FMR20 with RIA15 (incl. option for FMR20 basic configuration)

The RIA15 remote indicator can be ordered together with the device.

Product structure, feature 620 "Accessory enclosed":
- Option R4 "Remote indicator RIA15 non-hazardous area, field housing"
- Option R5 "Remote indicator RIA15 with explosion protection approval, field housing"

Alternatively available as an accessory, for details see Technical Information TI01043K and Operating Instructions BA01170K

Terminal assignment RIA15
- **+**
  Positive connection, current measurement
- **-**
  Negative connection, current measurement (without backlighting)
- **LED**
  Negative connection, current measurement (with backlighting)
- ⏚
  Functional grounding: Terminal in housing

The RIA15 process indicator is loop-powered and does not require any external power supply.

The voltage drop to be taken into account is:
- ≤1 V in the standard version with 4 to 20 mA communication
- ≤1.9 V with HART communication
- and an additional 2.9 V if display light is used

Connection of the HART device and RIA15 without backlighting

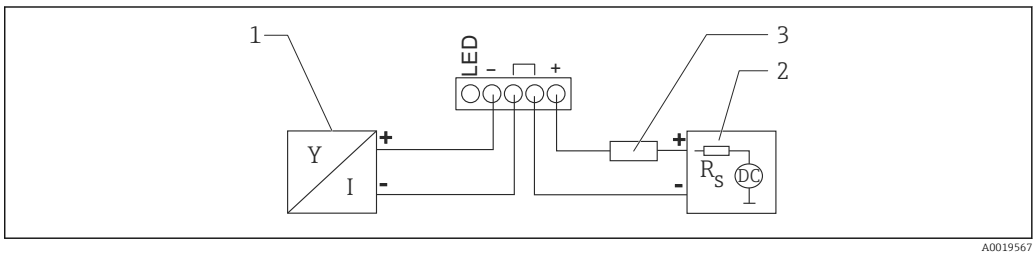

5 Block diagram of HART device with RIA15 process indicator without light

1 Device with HART communication
2 Power supply
3 HART resistor

Connection of the HART device and RIA15 with backlighting

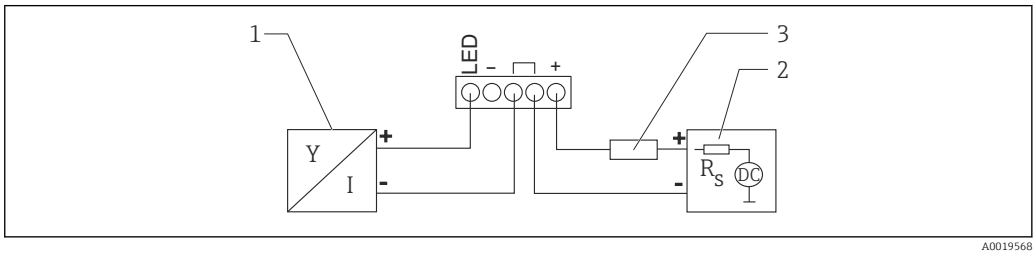

6 Block diagram of HART device with RIA15 process indicator with light

1 Device with HART communication
2 Power supply
3 HART resistor

Block diagram of HART device, RIA15 with installed HART communication resistor module

The HART communication module for installation in the RIA15 can be ordered together with the device.

Product structure, feature 620 "Accessory enclosed":
Option R6 "HART communication resistor hazardous / non-hazardous area"

The voltage drop to be taken into account is:
Max. 7 V

Alternatively available as an accessory, for details see Technical Information TI01043K and Operating Instructions BA01170K

Connection of the HART communication resistor module, RIA15 without backlighting

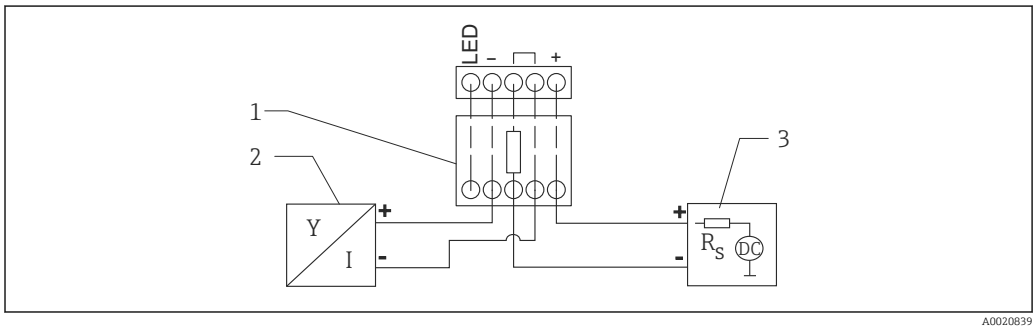

7 Block diagram of HART device, RIA15 without light, HART communication resistor module

1 HART communication resistor module
2 Device with HART communication
3 Power supply

Connection of the HART communication resistor module, RIA15 with backlighting

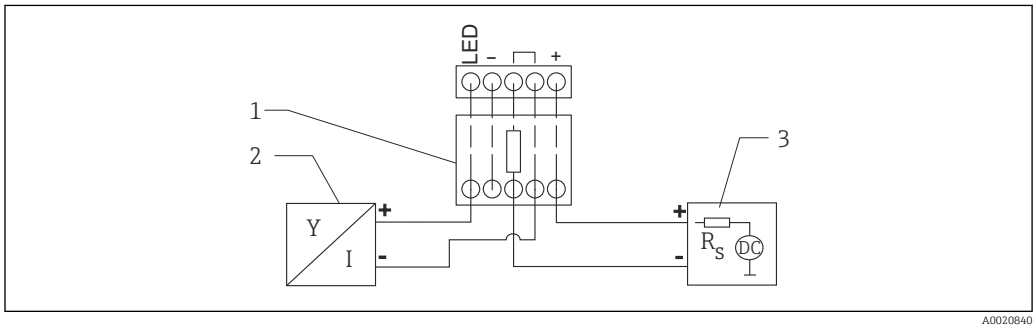

8 Block diagram of HART device, RIA15 with light, HART communication resistor module

1 HART communication resistor module
2 Device with HART communication
3 Power supply

Cable specification

Unshielded cable, wire cross-section 0.75 mm^2
- Resistant to UV and weather conditions as per ISO 4892-2
- Flame resistance according to IEC 60332-1-2

As per IEC/EN 60079-11 section 10.9, the cable is designed for a tensile strength of 30 N (6.74 lbf) (over a period of 1 h).

The device is supplied with 5 m (16 ft) cable length as standard. Cable lengths 10 m (33 ft) and 20 m (66 ft) are optionally available.

Lengths can be selected by the user up to an overall length of 300 m (980 ft) and are available by the meter (order option "8") or foot (order option "A").

Overvoltage protection

The device is equipped with integrated overvoltage protection.

Performance characteristics

Reference operating conditions

- Temperature = +24 °C (+75 °F) ±5 °C (±9 °F)
- Pressure = 960 mbar abs. (14 psia) ±100 mbar (±1.45 psi)
- Humidity = 60 % ±15 %
- Reflector: metal plate with diameter ≥ 1 m (40 in)
- No major interference reflections inside the signal beam

Maximum measured error

Typical data under reference operating conditions: DIN EN 61298-2, percentage values in relation to the span.

Output, digital
(HART, SmartBlue (app))
- Sum of non-linearity, non-repeatability and hysteresis: ±2 mm (±0.08 in)
- Offset/zero point: ±4 mm (±0.16 in)

Output, analog
Only relevant for 4-20mA current output; add error of the analog value to the digital value
- Sum of non-linearity, non-repeatability and hysteresis: ±0.02 %
- Offset/zero point: ±0.03 %

Differing values in near-range applications

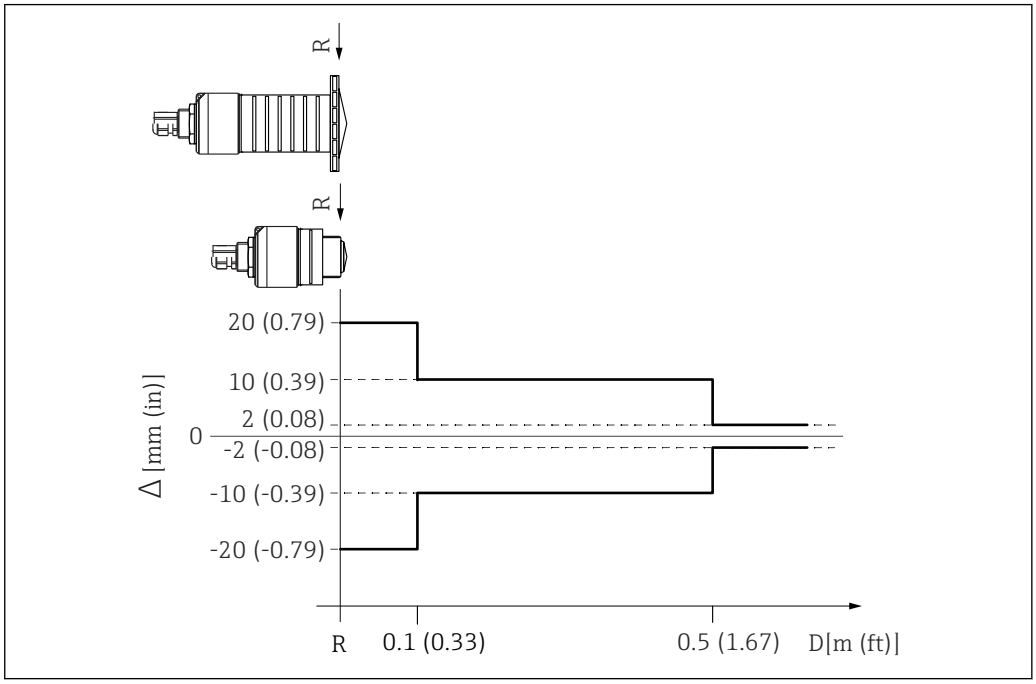

9 Maximum measured error in near-range applications; values for standard version

Δ Maximum measured error
R Reference point of the distance measurement
D Distance from reference point of antenna

Measured value resolution

Dead band as per EN61298-2:
- Digital: 1 mm (0.04 in)
- Analog: 4 µA

Response time

The response time can be configured. The following step response times apply (in accordance with DIN EN 61298-2) when damping is switched off:

Tank height
<20 m (66 ft)

Sampling rate
1 s^{-1}

Response time
<3 s

In accordance with DIN EN 61298-2, the step response time is the time following an abrupt change in the input signal up until the changed output signal has adopted 90% of the steady-state value for the first time.

Influence of ambient temperature

The measurements are carried out in accordance with EN 61298-3
- Digital (HART, *Bluetooth*® wireless technology):
  Standard version: average T_C = ±3 mm (±0.12 in)/10 K
- Analog (current output):
  - Zero point (4 mA): average T_K = 0.02 %/10 K
  - Span (20 mA): average T_K = 0.05 %/10 K

Installation

Installation conditions

Installation types

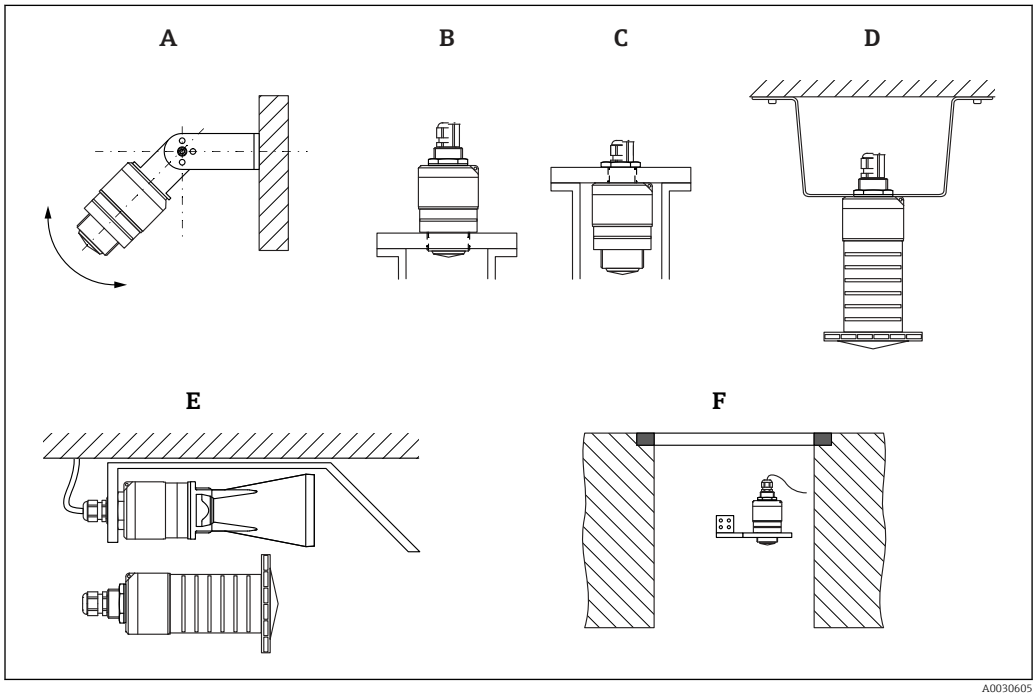

10 *Wall, ceiling or nozzle installation*

A Wall or ceiling mount, adjustable
B Mounted at front thread
C Mounted at rear thread
D Ceiling installation with counter nut (included in delivery)
E Horizontal installation in cramped spaces (wastewater shaft), 40 mm (1.5 in) antenna with flooding protection tube (accessory) or 80 mm (3 in) antenna recommended
F Shaft wall mounting

Caution!
- The sensor cables are not designed as supporting cables. Do not use them for suspension purposes.
- Always operate the device in a vertical position in free-space applications.

Position for installation on a vessel

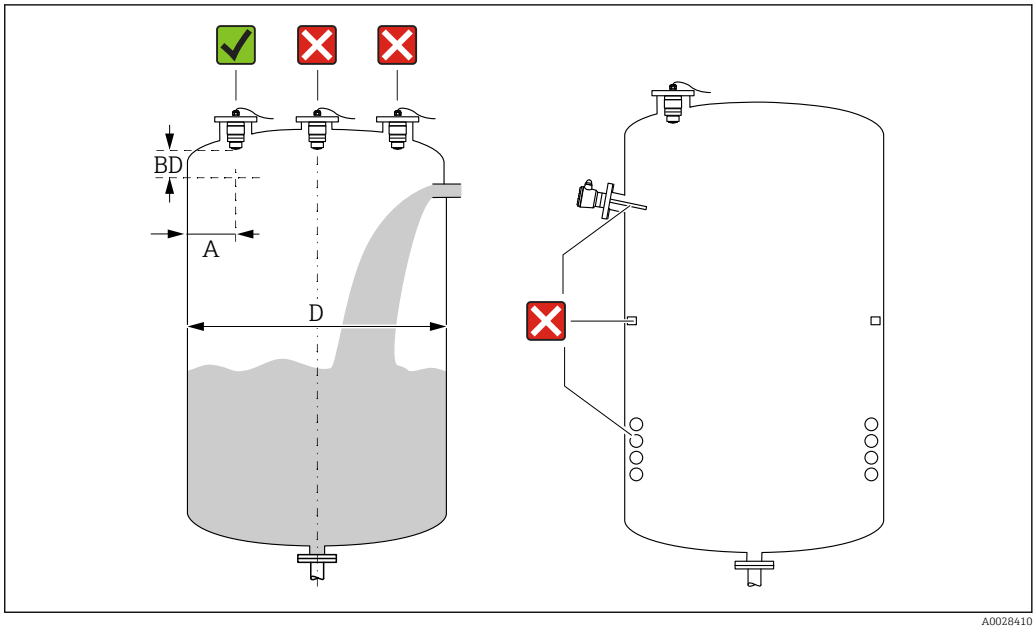

11 *Installation position on a vessel*

- If possible install the sensor so that its lower edge projects into the vessel.
- Recommended distance **A** wall - nozzle outer edge: ~ ⅙ of the vessel diameter **D**. Under no circumstances should the device be mounted closer than 15 cm (5.91 in) to the vessel wall.
- Do not install the sensor in the middle of the vessel.
- Avoid measurements through the filling curtain.
- Avoid equipment such as limit switches, temperature sensors, baffles, heating coils etc.
- No signals are evaluated within the Blocking distance (BD). It can therefore be used to suppress interference signals (e.g. the effects of condensate) in the vicinity of the antenna.
  An automatic Blocking distance of at least 0.1 m (0.33 ft) is configured as standard. However, this can be overwritten manually (0 m (0 ft) is also permitted).
  Automatic calculation:
  Blocking distance = Empty calibration - Full calibration - 0.2 m (0.656 ft).
  Each time a new entry is made in the **Empty calibration** parameter or **Full calibration** parameter, the **Blocking distance** parameter is recalculated automatically using this formula.
  If the result of the calculation is a value < 0.1 m (0.33 ft), the Blocking distance of 0.1 m (0.33 ft) will continue to be used.

Nozzle installation

The antenna should be located out of the nozzle for optimum measurement. The interior of the nozzle must be smooth and may not contain any edges or welded joints. The edge of the nozzle should be rounded if possible.

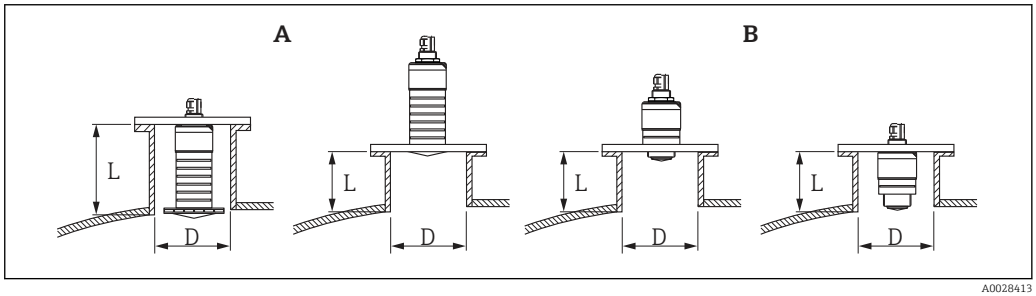

12 *Nozzle installation*

A 80 mm (3 in) antenna
B 40 mm (1.5 in) antenna

The maximum length of the nozzle **L** depends on the nozzle diameter **D**.

Please note the limits for the diameter and length of the nozzle.

80 mm (3 in) antenna, installation inside nozzle
- D: min. 120 mm (4.72 in)
- L: max. 205 mm (8.07 in) + D × 4.5

80 mm (3 in) antenna, installation outside nozzle
- D: min. 80 mm (3 in)
- L: max. D × 4.5

40 mm (1.5 in) antenna, installation outside nozzle
- D: min. 40 mm (1.5 in)
- L: max. D × 1.5

40 mm (1.5 in) antenna, installation inside nozzle
- D: min. 80 mm (3 in)
- L: max. 140 mm (5.5 in) + D × 1.5

Device alignment for installation on a vessel

- Align the antenna vertically to the product surface.
- Align the eyelet with lug towards the vessel wall as well as possible.

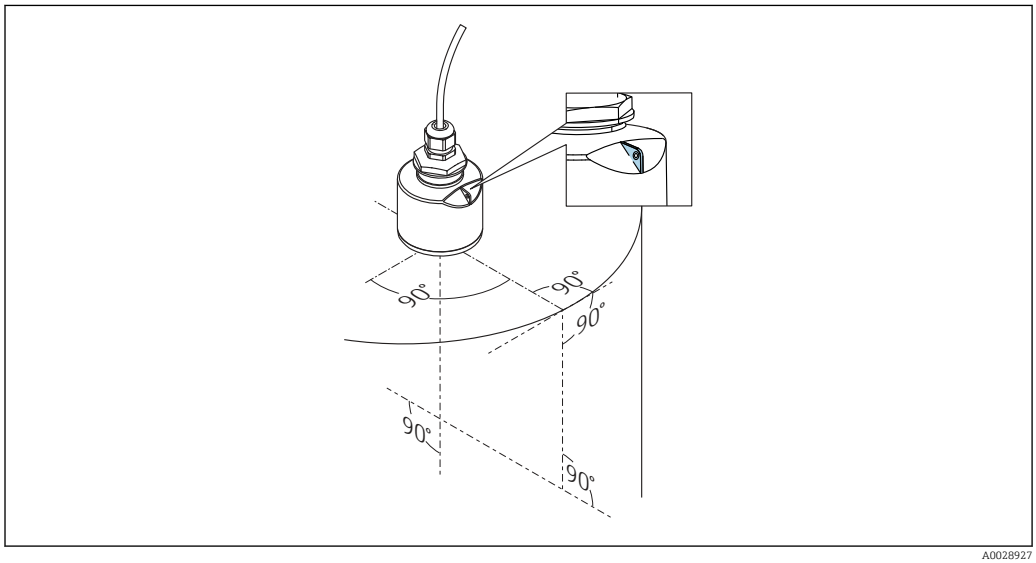

A0028927

13 Device alignment for installation on a vessel

Beam angle

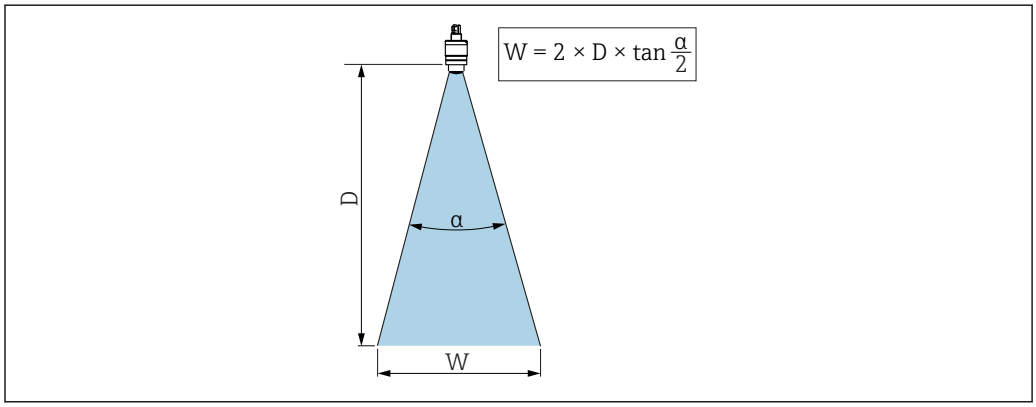

A0033201

14 Relationship between beam angle a, distance D and beamwidth diameter W

The beam angle is defined as the angle **α**, at which the power density of the radar waves reaches half the value of the maximum power density (3 dB width). Microwaves are also emitted outside the signal beam and can be reflected off interfering installations.

Beam diameter **W** as a function of beam angle **α** and distance **D**.

40 mm (1.5 in) antenna, α 30 °
W = D × 0.54

40 mm (1.5 in) antenna with flooding protection tube, α 12 °
W = D × 0.21

80 mm (3 in) antenna with or without flooding protection tube, α 12 °
W = D × 0.21

Measurement in plastic vessels

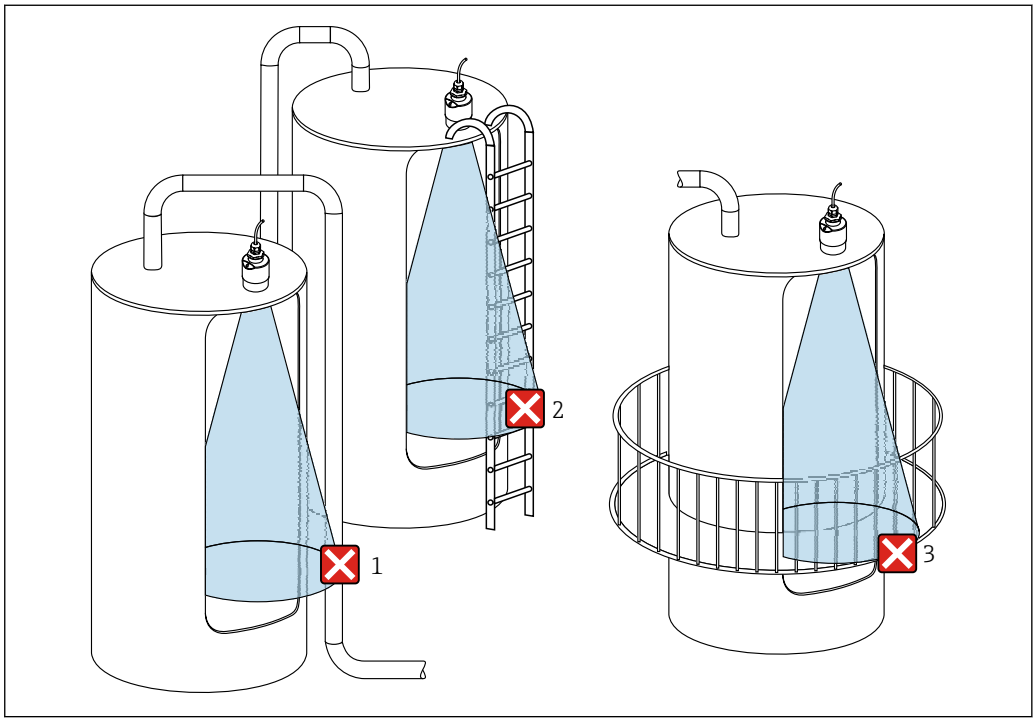

15 *Measurement in a plastic vessel with a metallic, interfering installation outside of the vessel*

1 *Pipe, tubing*
2 *Ladder*
3 *Grate, railing*

If the outer wall of the vessel is made of a non-conductive material (e.g. GFR), microwaves can also be reflected by interfering installations outside of the vessel.

Please ensure there are no interfering installations made of a conductive material in the signal beam (see the beam angle section for information on calculating the beamwidth diameter).

Please contact the manufacturer for further information.

Protective hood

For outdoor use, a protective hood is recommended.

The protective hood can be ordered as an accessory or together with the device via the product structure "Accessory enclosed".

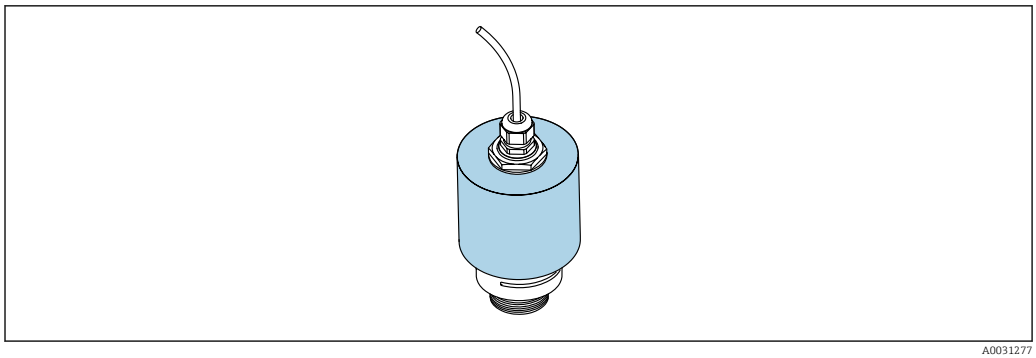

16 *Protective hood, e.g. with 40 mm (1.5") antenna*

The sensor is not completely covered by the protective hood.

Free-field measurement with flooding protection tube

The flooding protection tube ensures the sensor measures the maximum level even if it is completely flooded.

In free-field installations and/or in applications where there is a risk of flooding, the flooding protection tube must be used.

The flooding protection tube can be ordered as an accessory or together with the device via the product structure "Accessory enclosed".

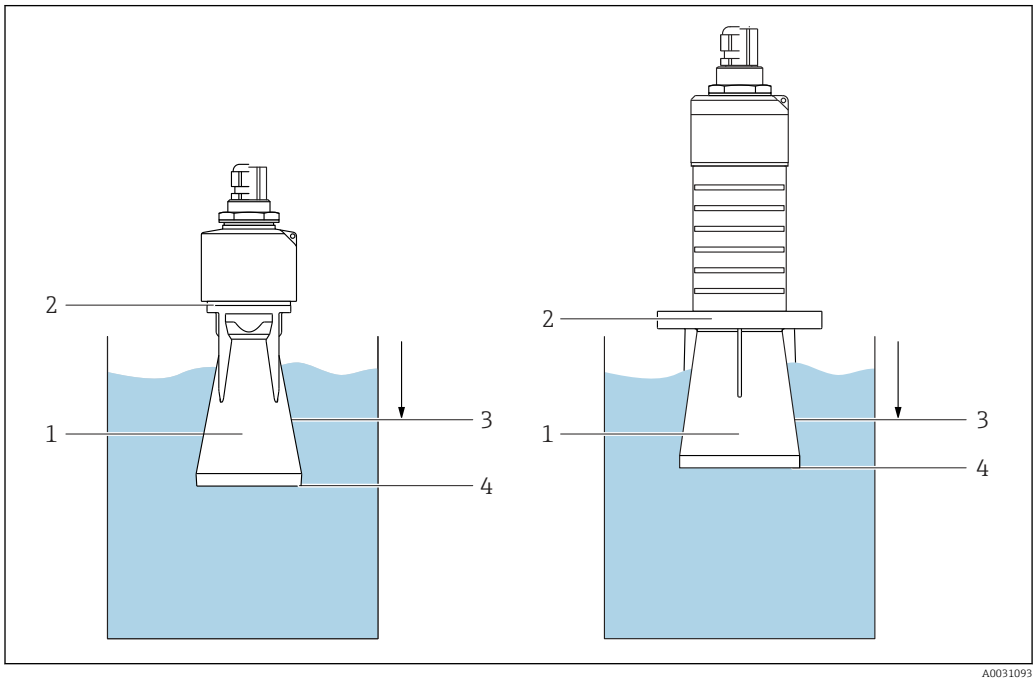

17 *Function of flooding protection tube*

1 *Air pocket*
2 *O-ring (EPDM) seal*
3 *Blocking distance*
4 *Max. level*

The tube is screwed directly onto the sensor and seals off the system by means of an O-ring making it air-tight. In the event of flooding, the air pocket that formed in the tube ensures the measurement of the maximum level at the end of the tube. Due to the fact that the Blocking distance is inside the tube, multiple echoes are not analyzed.

Installation with mounting bracket, adjustable

The mounting bracket can be ordered as an accessory or together with the device via the product structure "Accessory enclosed".

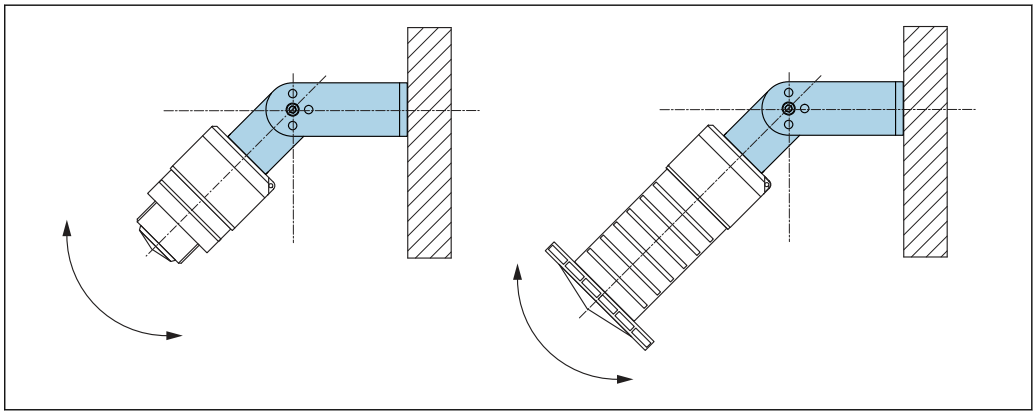

A0030606

18 *Installation with mounting bracket, adjustable*

- Wall or ceiling installation is possible.
- Using the mounting bracket, position the antenna so that it is perpendicular to the product surface.

NOTICE

There is no conductive connection between the mounting bracket and transmitter housing.
Electrostatic charging possible.
► Integrate the mounting bracket in the local potential equalization system.

Cantilever installation, with pivot

The cantilever, wall bracket and mounting frame are available as accessories.

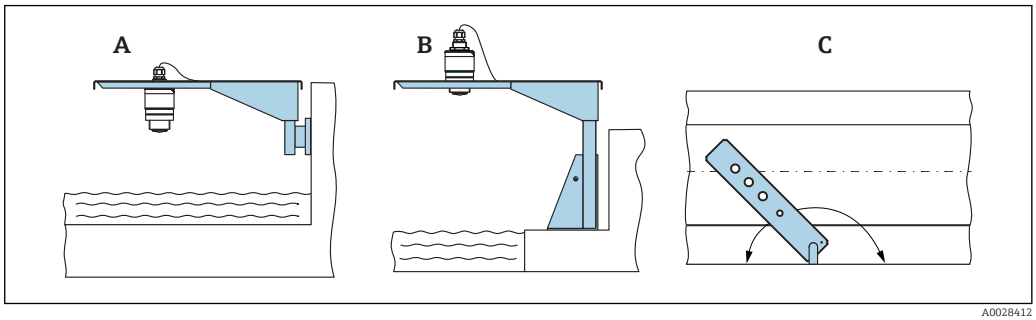

A0028412

19 *Cantilever installation, with pivot*

A Cantilever with wall bracket
B Cantilever with mounting frame
C Cantilever can be turned (e.g., in order to position the device over the center of the flume)

Installation of horizontal mounting bracket for sewer shafts

The horizontal mounting bracket for sewer shafts is available as an accessory.

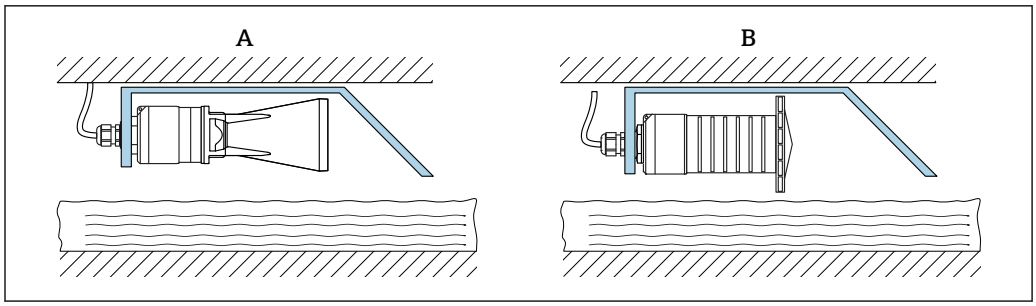

20 *Installation of horizontal mounting bracket for sewer shafts*

A 40 mm (1.5 in) Antenna, with flooding protection tube (accessory)
B 80 mm (3 in) Antenna, without flooding protection tube

Mounting in a shaft

The pivoted mounting bracket is available as an accessory.

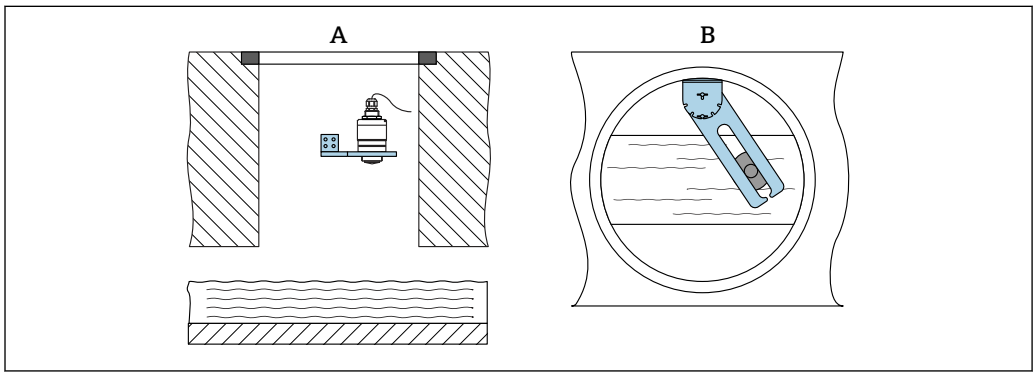

21 *Mounting in a shaft, pivotable and adjustable*

A Arm with wall bracket
B Pivotable and adjustable arm (e.g. to align the device with the center of a channel)

Environment

Ambient temperature range	Measuring device: −40 to +80 °C (−40 to +176 °F) It may not be possible to use the Bluetooth connection at ambient temperatures > 60 °C (140 °F). Outdoor operation in strong sunlight: ▪ Mount the device in the shade. ▪ Avoid direct sunlight, particularly in warm climatic regions. ▪ Use a weather protection cover.
Storage temperature	−40 to +80 °C (−40 to +176 °F)
Climate class	DIN EN 60068-2-38 (test Z/AD)
Operating altitude as per IEC 61010-1 Ed.3	Generally up to 2 000 m (6 600 ft) above sea level.
Degree of protection	Tested acc. to: ▪ IP66, NEMA 4X ▪ IP68, NEMA 6P (24 h at 1.83 m (6.00 ft) 1.83 m under water)
Vibration resistance	DIN EN 60068-2-64/IEC 60068-2-64: 20 to 2 000 Hz, 1 $(m/s^2)^2/Hz$

Electromagnetic compatibility (EMC)	Electromagnetic compatibility in accordance with all of the relevant requirements outlined in the EN 61000 series and NAMUR Recommendation EMC (NE 21). Details are provided in the Declaration of Conformity (www.endress.com/downloads).

Process

Process temperature, process pressure

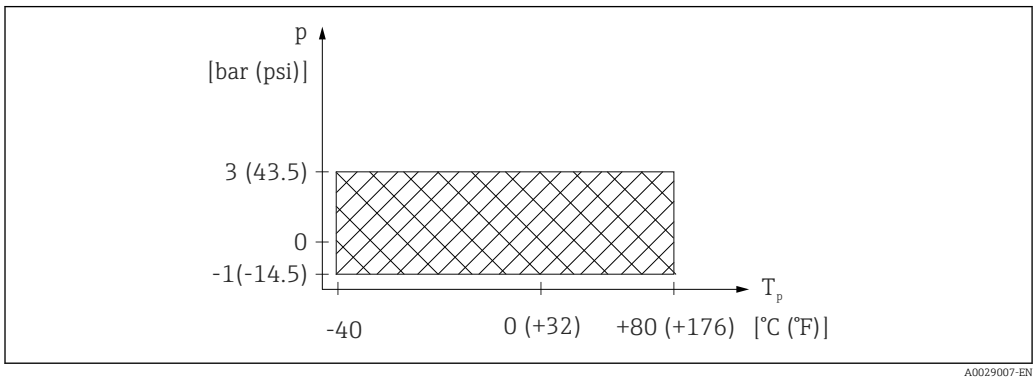

22 *FMR20: Permitted range for process temperature and process pressure*

Process temperature range
−40 to +80 °C (−40 to +176 °F)

Process pressure range, threaded process connection
- p_{rel} = −1 to 3 bar (−14.5 to 43.5 psi)
- p_{abs} < 4 bar (58 psi)

Process pressure range, UNI flange process connection
- p_{rel} = −1 to 1 bar (−14.5 to 14.5 psi)
- p_{abs} < 2 bar (29 psi)

The pressure range may be further restricted in the event of a CRN approval.

Dielectric constant

For liquids
- $\varepsilon_r \geq 4$
- Contact Endress+Hauser for lower ε_r values

For dielectric constants (DC values) of many media commonly used in various industries refer to:
- the Endress+Hauser DC manual (CP01076F)
- the Endress+Hauser "DC Values App" (available for Android and iOS)

Mechanical construction

Dimensions

40 mm (1.5 in) Antenna with G 1-½" or MNPT 1-½" thread

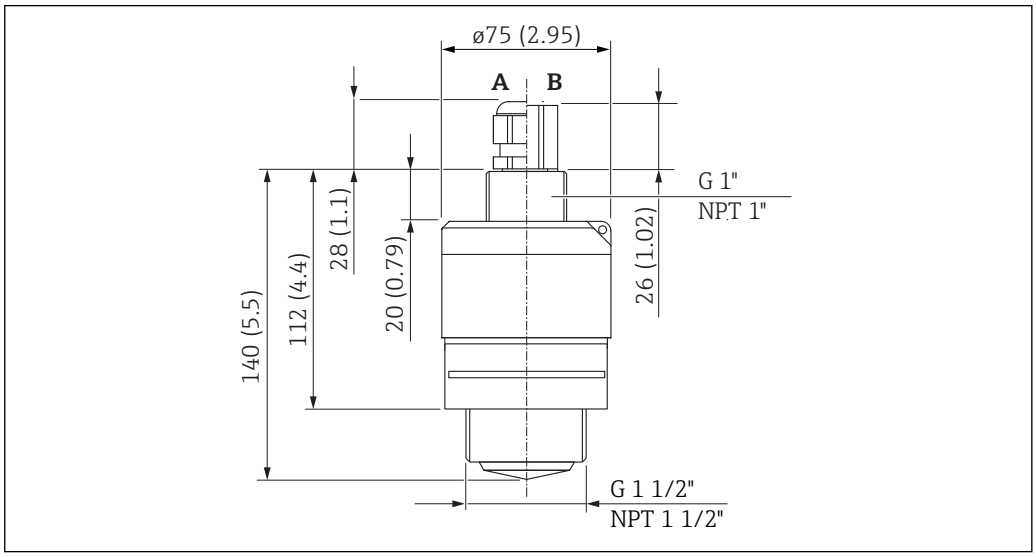

23 Dimensions of G 1-½" or MNPT 1-½" process connection thread, engineering unit: mm (in)

A Cable gland
B FNPT ½" conduit

40 mm (1.5 in) Antenna with G 2" or MNPT 2" thread

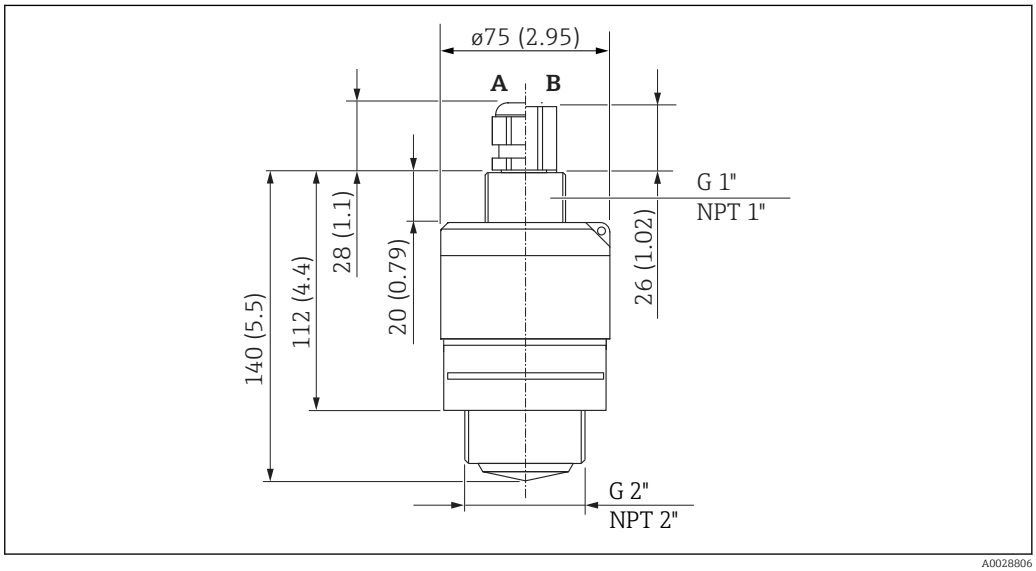

24 Dimensions of G 2" or MNPT 2" process connection thread, engineering unit: mm (in)

A Cable gland
B FNPT ½" conduit

40 mm (1.5 in) antenna with flooding protection tube

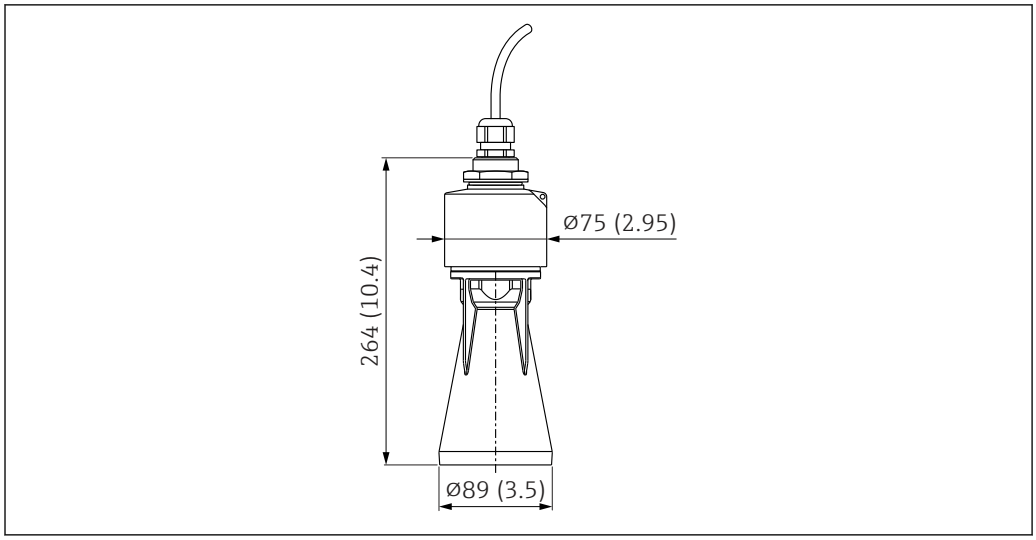

25 Dimensions of 40 mm (1.5 in) antenna mounted with flooding protection tube, engineering unit: mm (in)

The flooding protection tube, metalized PBT-PC, can be ordered together with the device via the product structure "Accessory enclosed".

80 mm (3 in)Antenna

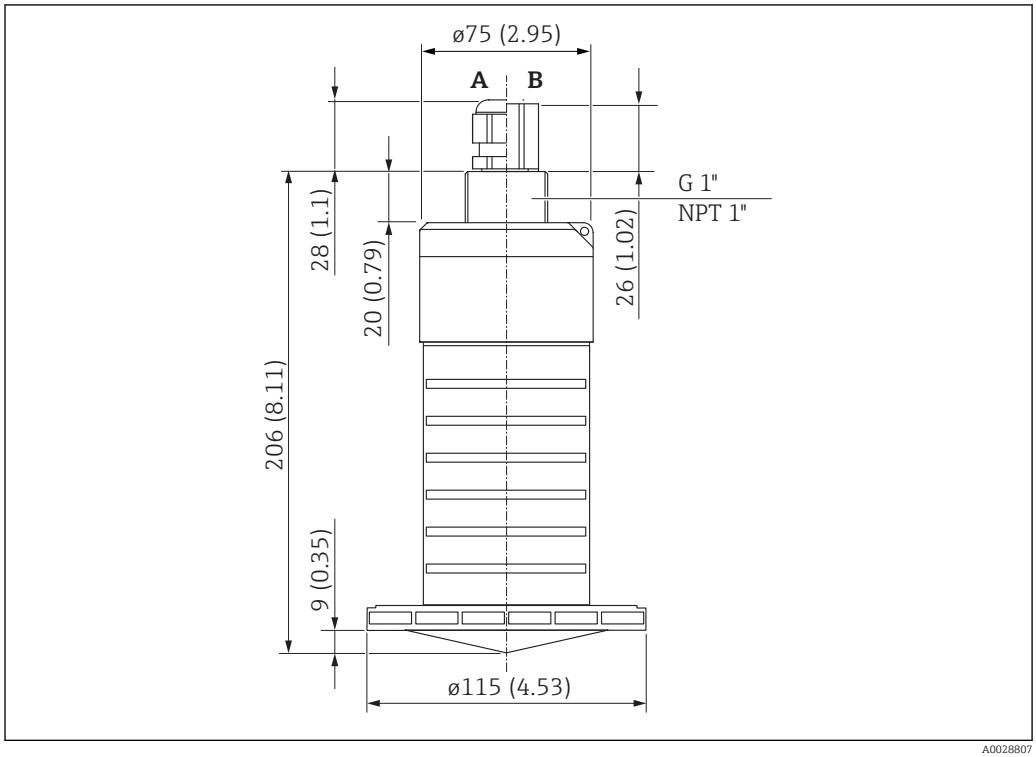

26 Dimensions of 80 mm (3 in) antenna; engineering unit: mm (in)

A Cable gland
B FNPT ½“ conduit

80 mm (3 in) antenna with flooding protection tube

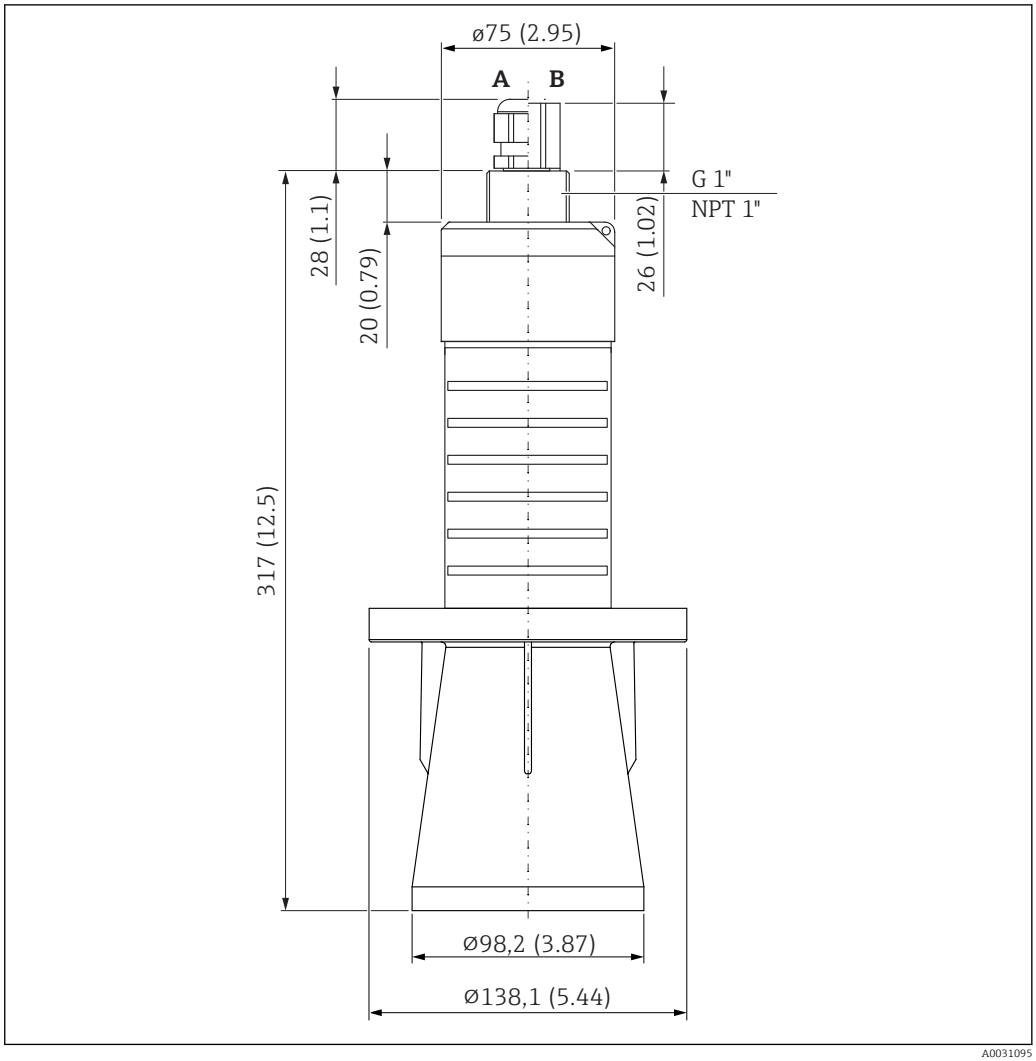

27 Dimensions of 80 mm (3 in) antenna mounted with flooding protection tube, engineering unit: mm (in)

A Cable gland
B FNPT ½“ conduit

The flooding protection tube, metalized PBT-PC, can be ordered together with the device via the product structure "Accessory enclosed".

80 mm (3 in) antenna with slip-on flange 3"/DN80

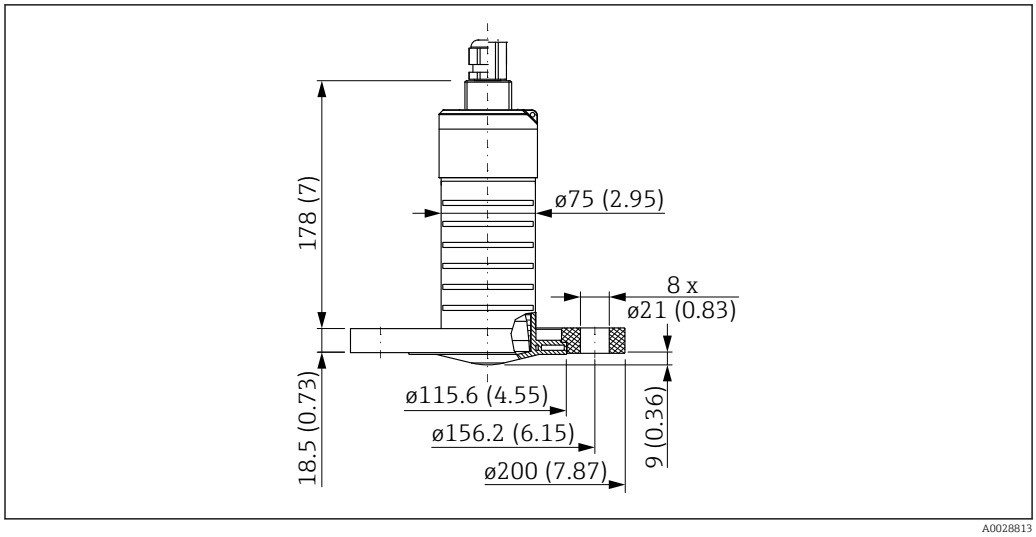

28 Dimensions of 80 mm (3 in) antenna with slip-on flange 3"/DN80, engineering unit: mm (in)

The slip-on flange 3"/DN80, PVDF, can be ordered together with the device via the product structure "Accessory enclosed".

80 mm (3 in) antenna with slip-on flange 4"/DN100

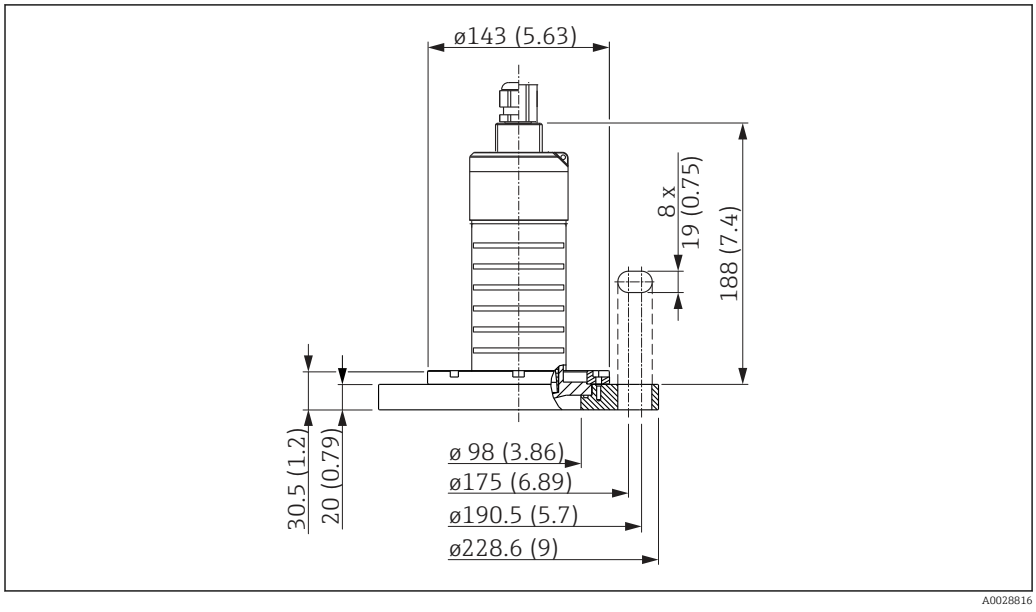

29 Dimensions of 80 mm (3 in) antenna with slip-on flange 4"/DN100, engineering unit: mm (in)

The slip-on flange 4"/DN100, PVDF, can be ordered together with the device via the product structure "Accessory enclosed".

80 mm (3 in) antenna with slip-on flange 6"/DN150

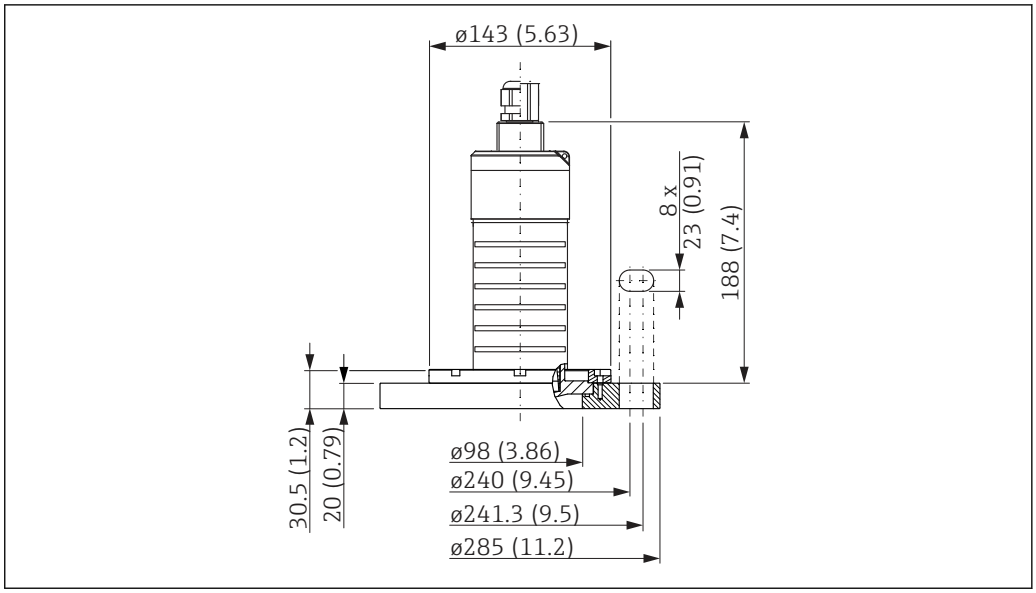

30 Dimensions of 80 mm (3 in) antenna with slip-on flange 6"/DN150, engineering unit: mm (in)

The slip-on flange 6"/DN150, PVDF, can be ordered together with the device via the product structure "Accessory enclosed".

Counter nut for process connection, rear side

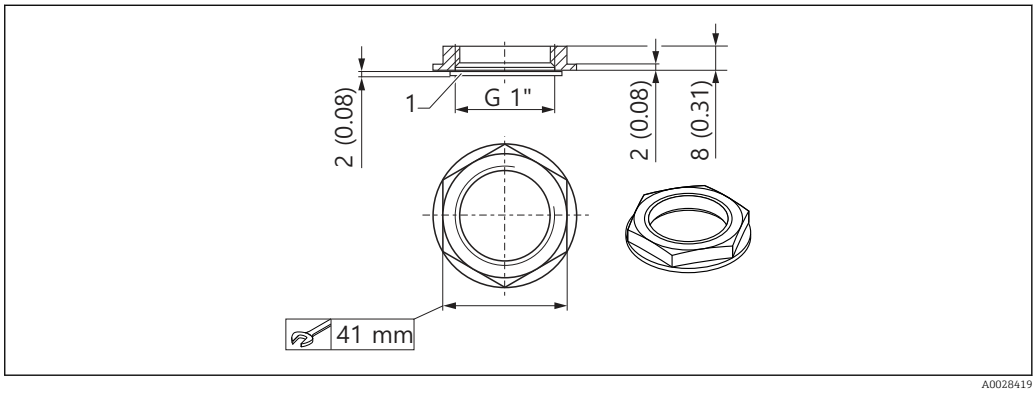

31 Dimensions of counter nut for process connection, rear side, engineering unit: mm (in)

1 Seal

- The counter nut with seal (EPDM) is included in the scope of supply.
- Material: PA66

Weight

Weight (incl. 5 m (16.4 ft) cable)
- Device with 40 mm (1.5 in) antenna: approx. 2.5 kg (5.5 lb)
- Device with 80 mm (3 in) antenna: approx. 2.8 kg (6.2 lb)

Materials

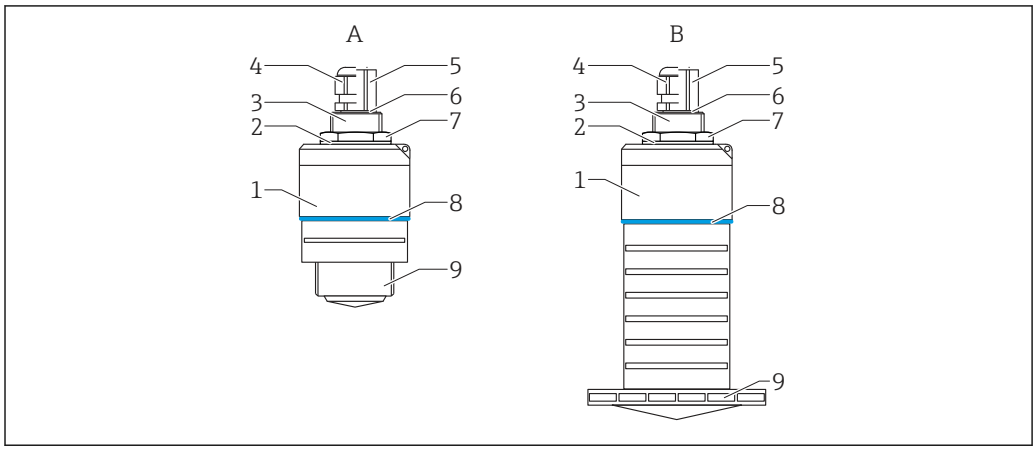

32 *Overview of materials*

A 40 mm (1.5 in)Antenna
B 80 mm (3 in)Antenna
1 Sensor housing; PVDF
2 Seal; EPDM
3 Process connection, rear side; PVDF
4 Cable gland; PA
5 Conduit adapter; CuZn nickel-plated
6 O-ring; EPDM
7 Counter nut; PA6.6
8 Design ring; PBT-PC
9 Process connection, front side; PVDF

Connecting cable

Available cable length: 5 to 300 m (16 to 980 ft)

Material : PVC

Operability

Operating concept

- 4 to 20 mA, HART
- Menu guidance with brief explanations of the individual parameter functions in the operating tool
- Optional: SmartBlue (app) via *Bluetooth*® wireless technology

Operation via Bluetooth® wireless technology

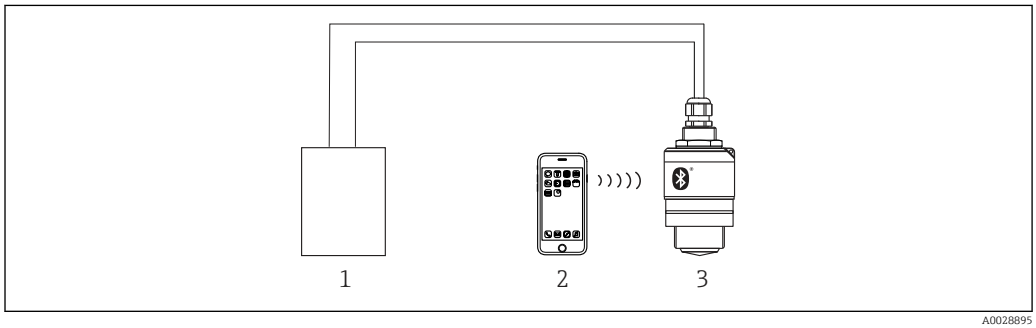

33 *Possibilities for remote operation via Bluetooth® wireless technology*

1 Transmitter power supply unit
2 Smartphone/tablet with SmartBlue (app)
3 Transmitter with Bluetooth® wireless technology

Via HART protocol

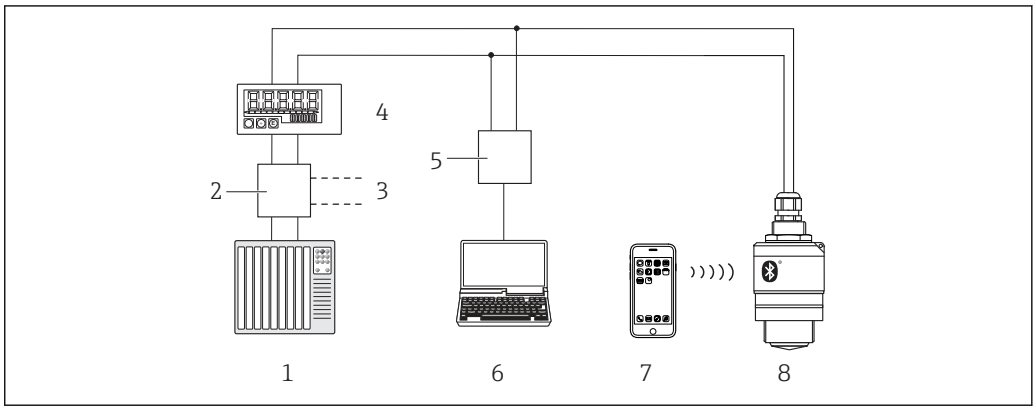

34 Options for remote operation via HART protocol

1 PLC (programmable logic controller)
2 Transmitter power supply unit, e.g. RN221N (with communication resistor)
3 Connection for Commubox FXA195
4 Loop-powered RIA15 process indicator
5 Commubox FXA195 (USB)
6 Computer with operating tool (FieldCare, DeviceCare)
7 Smartphone / tablet with SmartBlue (app)
8 Transmitter with Bluetooth® wireless technology

Certificates and approvals

The availability of approvals and certificates can be called up daily via the Product Configurator.

CE mark

The measuring system meets the legal requirements of the applicable EU Directives. These are listed in the corresponding EU Declaration of Conformity along with the standards applied.

Endress+Hauser confirms successful testing of the device by affixing to it the CE mark.

RoHS

The measuring system complies with the substance restrictions of the Restriction on Hazardous Substances Directive 2011/65/EU (RoHS 2).

EAC conformity

The measuring system meets the legal requirements of the applicable EAC guidelines. These are listed in the corresponding EAC Declaration of Conformity together with the standards applied.

Endress+Hauser confirms successful testing of the device by affixing to it the EAC mark.

RCM-Tick marking

The supplied product or measuring system meets the ACMA (Australian Communications and Media Authority) requirements for network integrity, interoperability, performance characteristics as well as health and safety regulations. Here, especially the regulatory arrangements for electromagnetic compatibility are met. The products are labelled with the RCM- Tick marking on the name plate.



A0029561

Approvals

- Non-hazardous area
- ATEX II 1 G Ex ia IIC T4 Ga
- ATEX II 1/2 G Ex ia IIC T4 Ga/Gb
- CSA C/US General Purpose
- CSA C/US IS Cl.I Div.1 Gr.A-D, AEx ia / Ex ia T4
- CSA C/US Cl.I Div.2 Gr.A-D, T4
- EAC Ex ia IIC T4 Ga/Gb
- IEC Ex ia IIC T4 Ga/Gb
- KC Ex ia IIC T4 Ga/Gb [3)]
- INMETRO Ex ia IIC T4 Ga/Gb
- NEPSI Ex ia IIC T4 Ga/Gb
- TIIS Ex ia IIC T4 [3)]

Additional safety instructions must be followed for use in hazardous areas. Please refer to the separate "Safety Instructions" (XA) document included in the delivery. Reference to the applicable XA can be found on the nameplate.

Explosion-protected smartphones and tablets

Only mobile end devices with Ex approval may be used in hazardous areas.

Pressure equipment with allowable pressure ≤ 200 bar (2 900 psi)

Pressure instruments with a flange and threaded boss that do not have a pressurized housing do not fall within the scope of the Pressure Equipment Directive, irrespective of the maximum allowable pressure.

Reasons:

According to Article 2, point 5 of EU Directive 2014/68/EU, pressure accessories are defined as "devices with an operational function and having pressure-bearing housings".

If a pressure instrument does not have a pressure-bearing housing (no identifiable pressure chamber of its own), there is no pressure accessory present within the meaning of the Directive.

3) Under development at time of going to press

EN 302729-1/2 radio standard

The devices comply with the LPR (Level Probing Radar) radio standard EN 302729-1/2 and are approved for unrestricted use inside and outside of closed vessels in countries of the EU and EFTA. As a prerequisite, the countries in question must have already implemented this standard.

The following countries are those that have currently implemented the standard:

Belgium, Bulgaria, Germany, Denmark, Estonia, France, Greece, UK, Ireland, Iceland, Italy, Liechtenstein, Lithuania, Latvia, Malta, The Netherlands, Norway, Austria, Poland, Portugal, Romania, Sweden, Switzerland, Slovakia, Spain, Czech Republic and Cyprus.

Implementation is still underway in all of the countries not listed.

Please note the following for operation of the devices outside of closed vessels:

1. The device must be mounted in accordance with the instructions in the "Installation" section.
2. Installation must be carried out by properly trained, expert staff.
3. The device antenna must be installed in a fixed location pointing vertically downwards.
4. The installation site must be located at a distance of 4 km from the astronomy stations listed below or otherwise approval must be provided by the relevant authority. If the device is installed at a distance of 4 to 40 km from one of the listed stations, it must not be installed at a height of more than 15 m (49 ft) above the ground.

Astronomy stations

Country	Name of the station	Latitude	Longitude
Germany	Effelsberg	50°31'32" North	06°53'00" East
Finland	Metsähovi	60°13'04" North	24°23'37" East
	Tuorla	60°24'56" North	24°26'31" East
France	Plateau de Bure	44°38'01" North	05°54'26" East
	Floirac	44°50'10" North	00°31'37" West
Great Britain	Cambridge	52°09'59" North	00°02'20" East
	Damhall	53°09'22" North	02°32'03" West
	Jodrell Bank	53°14'10" North	02°18'26" West
	Knockin	52°47'24" North	02°59'45" West
	Pickmere	53°17'18" North	02°26'38" West
Italy	Medicina	44°31'14" North	11°38'49" East
	Noto	36°52'34" North	14°59'21" East
	Sardinia	39°29'50" North	09°14'40" East
Poland	Fort Skala Krakow	50°03'18" North	19°49'36" East
Russia	Dmitrov	56°26'00" North	37°27'00" East
	Kalyazin	57°13'22" North	37°54'01" East
	Pushchino	54°49'00" North	37°40'00" East
	Zelenchukskaya	43°49'53" North	41°35'32" East
Sweden	Onsala	57°23'45" North	11°55'35" East
Switzerland	Bleien	47°20'26" North	08°06'44" East
Spain	Yebes	40°31'27" North	03°05'22" West
	Robledo	40°25'38" North	04°14'57" West
Hungary	Penc	47°47'22" North	19°16'53" East

As a general rule, the requirements outlined in EN 302729-1/2 must be observed.

FCC / Industry Canada

This device complies with Part 15 of the FCC Rules [and with Industry Canada license-exempt RSS standard(s)]. Operation is subject to the following two conditions: (1) this device may not cause

harmful interference, and (2) this device must accept any interference received, including interference that may cause undesired operation.

Le présent appareil est conforme aux CNR d'Industrie Canada applicables aux appareils radio exempts de licence. L'exploitation est autorisée aux deux conditions suivantes: (1) l'appareil ne doit pas produire de brouillage, et (2) l'utilisateur de l'appareil doit accepter tout brouillage radioélectrique subi, même si le brouillage est susceptible d'en compromettre le fonctionnement.

[Any] Changes or modifications made to this equipment not expressly approved by Endress+Hauser may void the FCC authorization to operate this equipment.

This equipment has been tested and found to comply with the limits for a Class B digital device, pursuant to Part 15 of the FCC Rules. These limits are designed to provide reasonable protection against harmful interference in a residential installation. This equipment generates, uses and can radiate radio frequency energy and, if not installed and used in accordance with the instructions, may cause harmful interference to radio communications. However, there is no guarantee that interference will not occur in a particular installation. If this equipment does cause harmful interference to radio or television reception, which can be determined by turning the equipment off and on, the user is encouraged to try to correct the interference by one or more of the following measures:
- Reorient or relocate the receiving antenna
- Increase the separation between the equipment and receiver
- Connect the equipment into an outlet on a circuit different from that to which the receiver is connected
- Consult the dealer or an experienced radio/TV technician for help

- The installation of the LPR/TLPR device shall be done by trained installers, in strict compliance with the manufacturer's instructions.
- The use of this device is on a "no-interference, no-protection" basis. That is, the user shall accept operations of high-powered radar in the same frequency band which may interfere with or damage this device. However, devices found to interfere with primary licensing operations will be required to be removed at the user's expense.
- Only for usage without the accessory "flooding protection tube", i.e. NOT in the free-field: This device shall be installed and operated in a completely enclosed container to prevent RF emissions, which can otherwise interfere with aeronautical navigation.

FCC / Industry Canada IDs

Tank level-probing radar
- **HVIN: FMR20**
  - FCC ID: LCGFMR2XK
  - Industry Canada ID: 2519A-2K
- **HVIN: FMR20X**
  - FCC ID: LCGFMR2XKT
  - Industry Canada ID: 2519A-2KT

Level-probing radar:
- HVIN: **FMR20+R7; FMR20+R8**
  - FCC ID: LCGFMR2XKF
  - Industry Canada ID: 2519A-2KF
- HVIN: **FMR20+R7X; FMR20+R8X**
  - FCC ID: LCGFMR2XKL
  - Industry Canada ID: 2519A-2KL

Japanese Radio Law and Japanese Telecommunications Business Law Compliance

This device is granted pursuant to the Japanese Radio Law (電波法) and the Japanese Telecommunications Business Law (電気通信事業法). This device should not be modified (otherwise the granted designation number will become invalid).

Certified No.: 202-LSF004

The products are labelled with the Technical Conformity Mark (GITEKI) from Japanese Ministry of Internal Affairs and Communications (MIC) on the name plate.

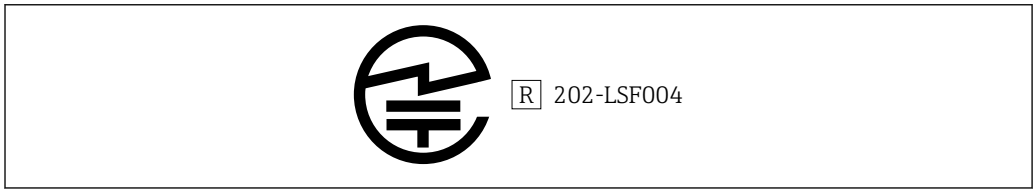

A0032960

Mexico

El funcionamiento de este equipo está sujeto a las dos condiciones siguientes:
- (1) Este equipo o aparato no puede causar interferencias perjudiciales.
- (2) Este equipo o aparato debe aceptar todas las interferencias, incluyendo las que puedan causar un funcionamiento indeseado del equipo o aparato.

Este producto contiene un módulo inalámbrico

Marca: Endress+Hauser

Modelo: FMR20

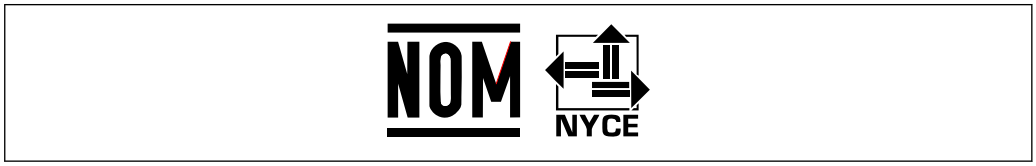

A0034100

Other standards and guidelines

- IEC/EN 61010-1
  Protection Measures for Electrical Equipment for Measurement, Control, Regulation and Laboratory Procedures
- IEC/EN 55011
  "EMC Emission, RF Emission for Class B". Industrial, scientific and medical equipment – Electromagnetic disturbance characteristics - Limits and methods of measurement
- IEC/EN 61000-4-2
  EMC Immunity, ESD (Performance Criteria A). Electromagnetic compatibility (EMC): Testing and measurement techniques - Electrostatic discharge immunity test (ESD)
- IEC/EN 61000-4-3
  EMC Immunity, RF field susceptibility (Performance Criteria A). Electromagnetic compatibility (EMC): Testing and measurement techniques - Radiated, radio-frequency, electromagnetic field immunity test
- IEC/EN 61000-4-4
  EMC Immunity, bursts (Performance Criteria B). Electromagnetic compatibility (EMC): Testing and measurement techniques - Electrical fast transient/burst immunity test
- IEC/EN 61000-4-5
  EMC Immunity, surge (Performance Criteria B). Electromagnetic compatibility (EMC): Testing and measurement techniques - Surge immunity test
- IEC/EN 61000-4-6
  EMC Immunity, conducted RF (Performance Criteria A). Electromagnetic compatibility (EMC): Testing and measurement techniques - Immunity to conducted disturbances induced by radio-frequency fields
- IEC/EN 61000-4-8
  EMC Immunity, magnetic fields 50 Hz. Electromagnetic compatibility (EMC): Testing and measurement techniques - Power frequency magnetic field immunity test
- EN 61000-6-3
  EMC Emission, conducted RF. EMC: Radiated interference - Residential, commercial and light industry environment
- NAMUR NE 21
  Electromagnetic compatibility (EMC) of industrial process and laboratory control equipment
- NAMUR NE 43
  Standardization of the signal level for the breakdown information of digital transmitters with analog output signal.
- NAMUR NE 107
  Status classification as per NE107
- NAMUR NE 131
  Requirements for field devices for standard applications
- IEEE 802.15.1
  Requirements for the *Bluetooth*® wireless technology interface

Ordering information

Detailed ordering information is available for your nearest sales organization www.addresses.endress.com or in the Product Configurator under www.endress.com :

1. Click Corporate
2. Select the country
3. Click Products
4. Select the product using the filters and search field
5. Open the product page

The Configuration button to the right of the product image opens the Product Configurator.

Product Configurator - the tool for individual product configuration
- Up-to-the-minute configuration data
- Depending on the device: Direct input of measuring point-specific information such as measuring range or operating language
- Automatic verification of exclusion criteria
- Automatic creation of the order code and its breakdown in PDF or Excel output format
- Ability to order directly in the Endress+Hauser Online Shop

Accessories

Device-specific accessories

Protective cover

The protective cover can be ordered together with the device via the product structure "Accessory enclosed".

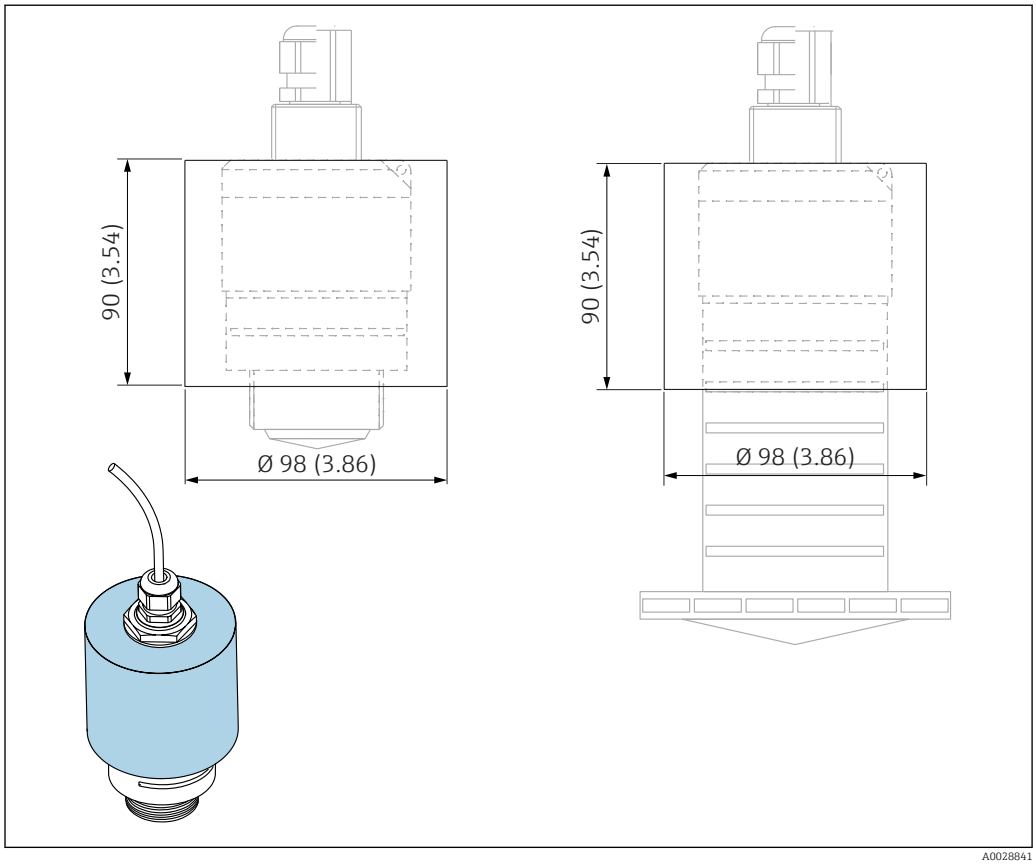

35 Dimensions of protective cover, engineering unit: mm (in)

Material
PVDF

Order number
52025686

The sensor is not completely covered in the case of the 40 mm (1.5 in) antenna or the 80 mm (3 in) antenna.

Securing nut G 1-1/2"

Suitable for devices with G 1-1/2" and MNPT 1-1/2" process connection.

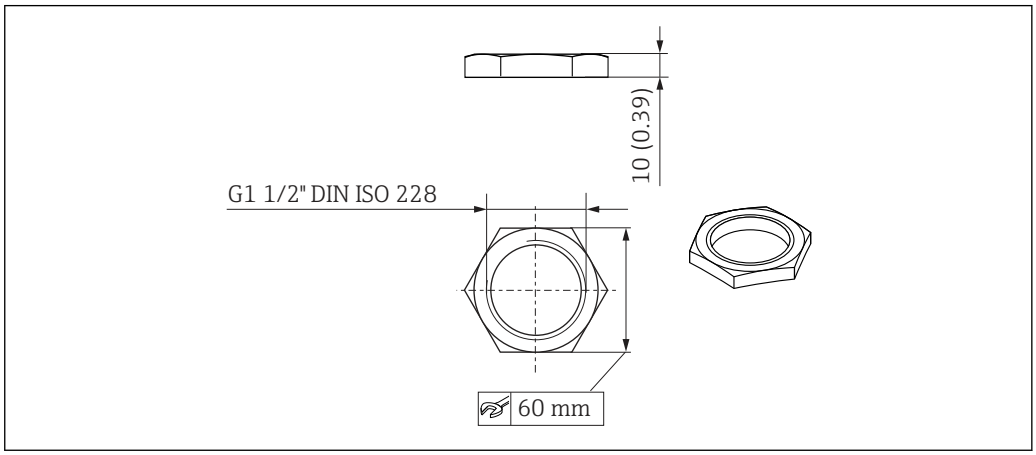

36 *Dimensions of securing nut, engineering unit: mm (in)*

Material
PC

Order number
52014146

Securing nut G 2"

Suitable for devices with G 2" and MNPT 2" process connection on front.

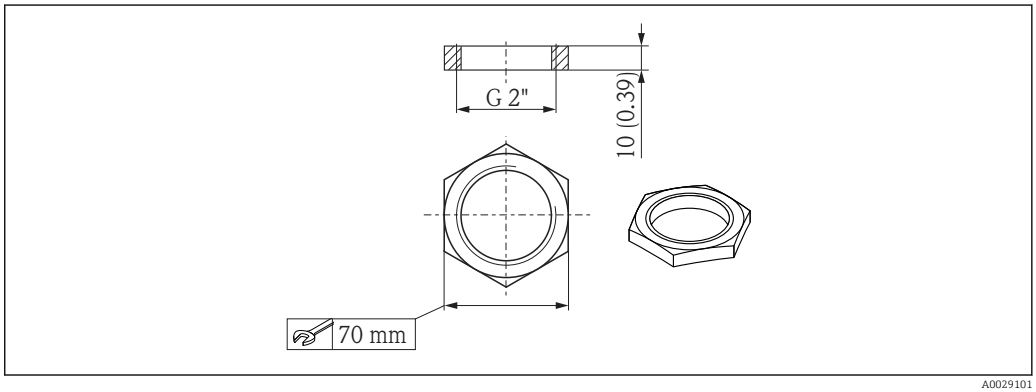

37 *Dimensions of securing nut, engineering unit: mm (in)*

Material
PC

Order number
52000598

Flooding protection tube 40 mm (1.5 in)

Suitable for use with devices with a 40 mm (1.5 in) antenna and G 1-1/2" process connection on front.

The flooding protection tube can be ordered together with the device via the product structure "Accessory enclosed".

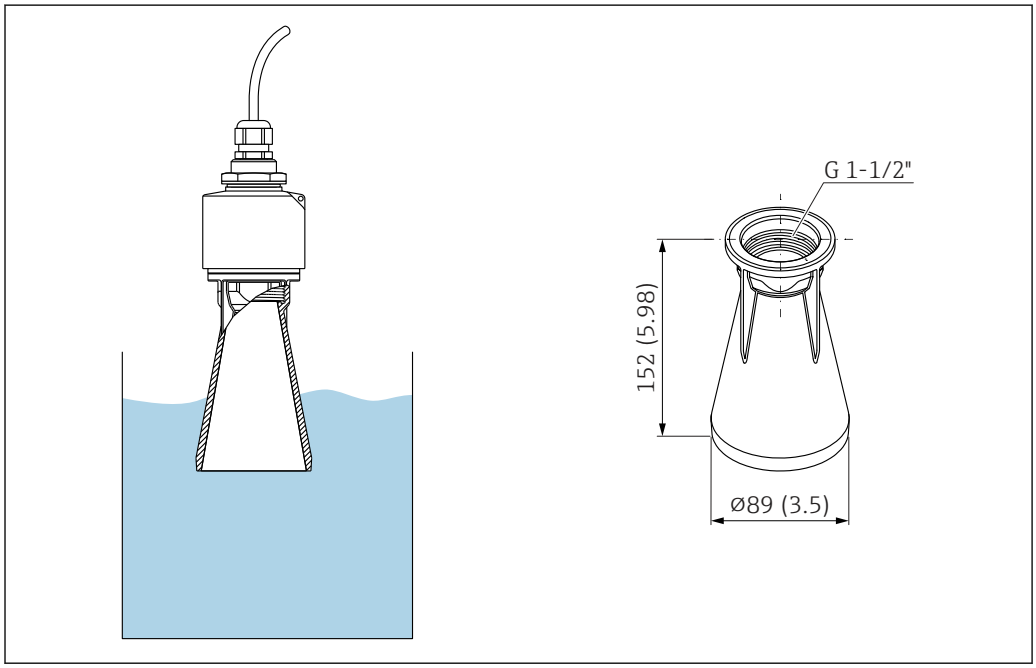

38 Dimensions of 40 mm (1.5 in) flooding protection tube, engineering unit: mm (in)

Material
PBT-PC, metalized

Order number
71325090

Flooding protection tube 80 mm (3 in)

Suitable for use with devices with a 80 mm (3 in) antenna and "Mounting customer side w/o flange" process connection.

The flooding protection tube can be ordered together with the device via the product structure "Accessory enclosed".

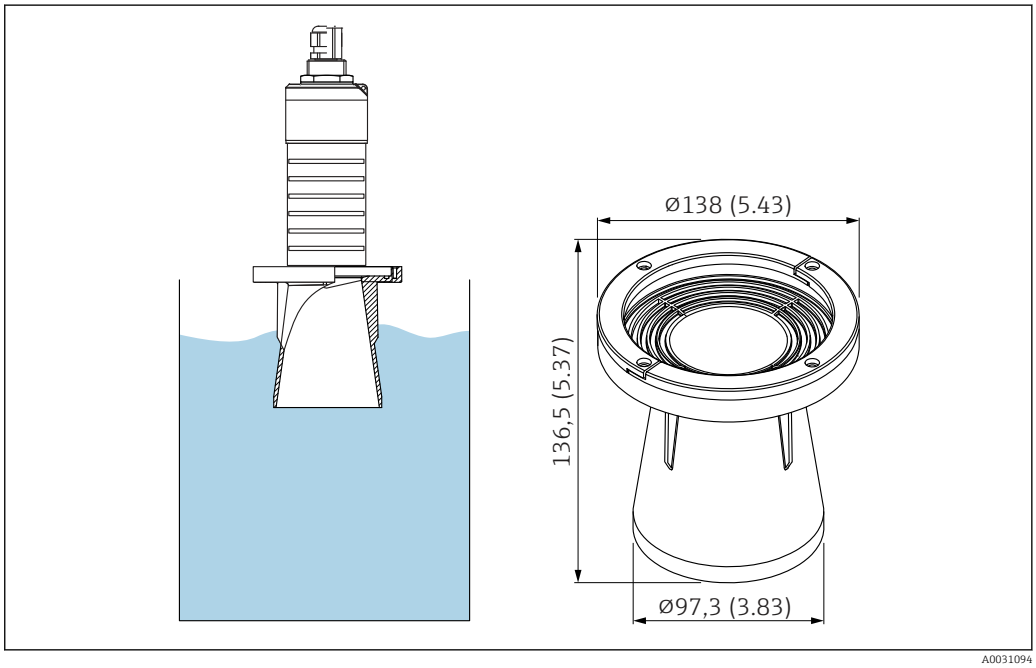

39 Dimensions of 80 mm (3 in) flooding protection tube, engineering unit: mm (in)

Material
PBT-PC, metalized

Order number
71327051

Mounting bracket, adjustable

The mounting bracket can be ordered together with the device via the product structure "Accessory enclosed".

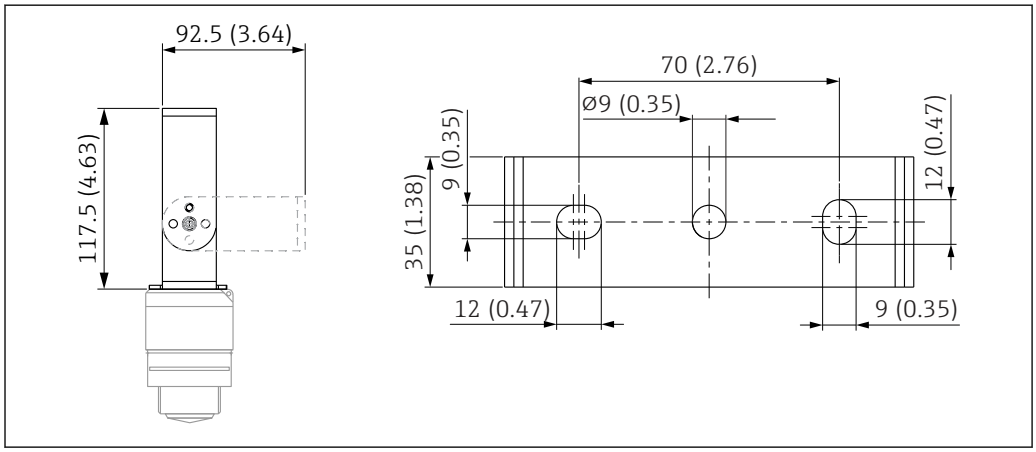

40 Dimensions of mounting bracket, engineering unit: mm (in)

Consists of:
- 1 × mounting bracket, 316L (1.4404)
- 1 × mounting bracket, 316L (1.4404)
- 3 × screws, A4
- 3 × securing disks, A4

Order number
71325079

UNI flange 2"/DN50/50, PP

The UNI flange 2"/DN50/50 can be ordered together with the device via the product structure "Accessory enclosed".

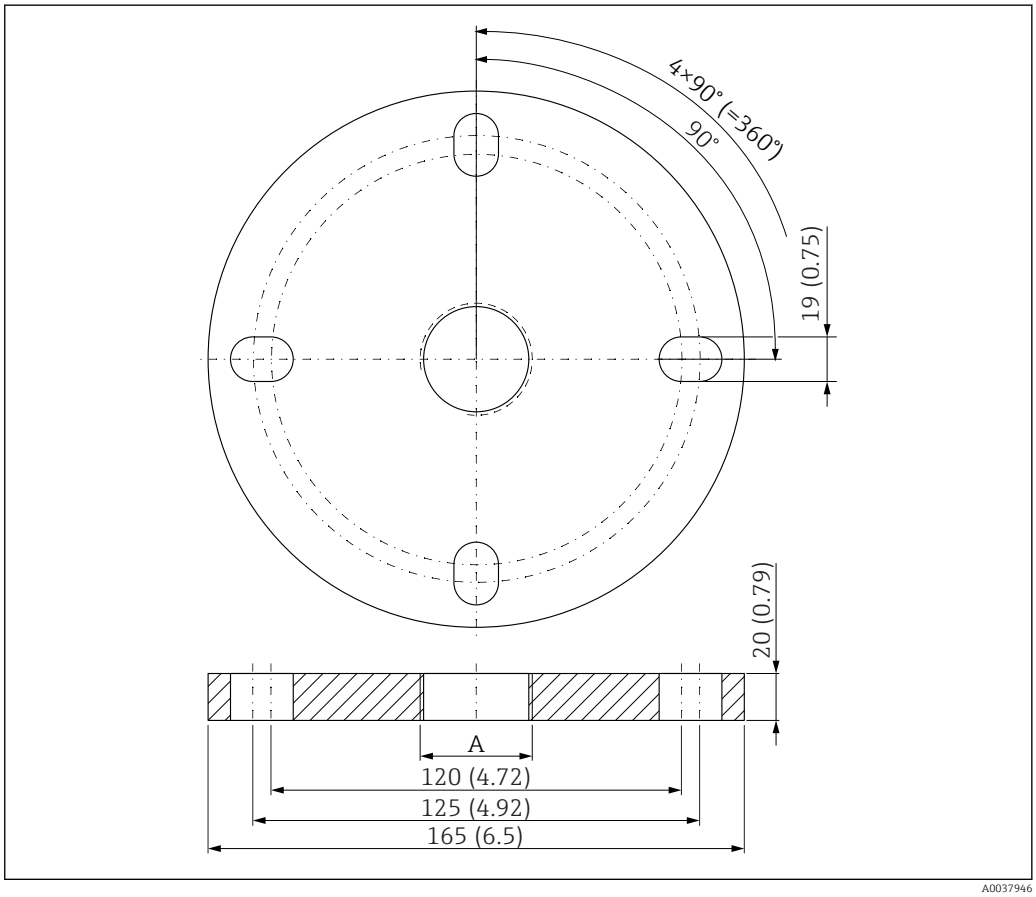

41 Dimensions of UNI flange 2"/DN50/50, engineering unit: mm (in)

A Sensor connection in accordance with product structure "Process connection on front" or "Process connection on rear"

Material
PP

Order number
FAX50-####

UNI flange 3"/DN80/80, PP

The UNI flange 3"/DN80/80 can be ordered together with the device via the product structure "Accessory enclosed".

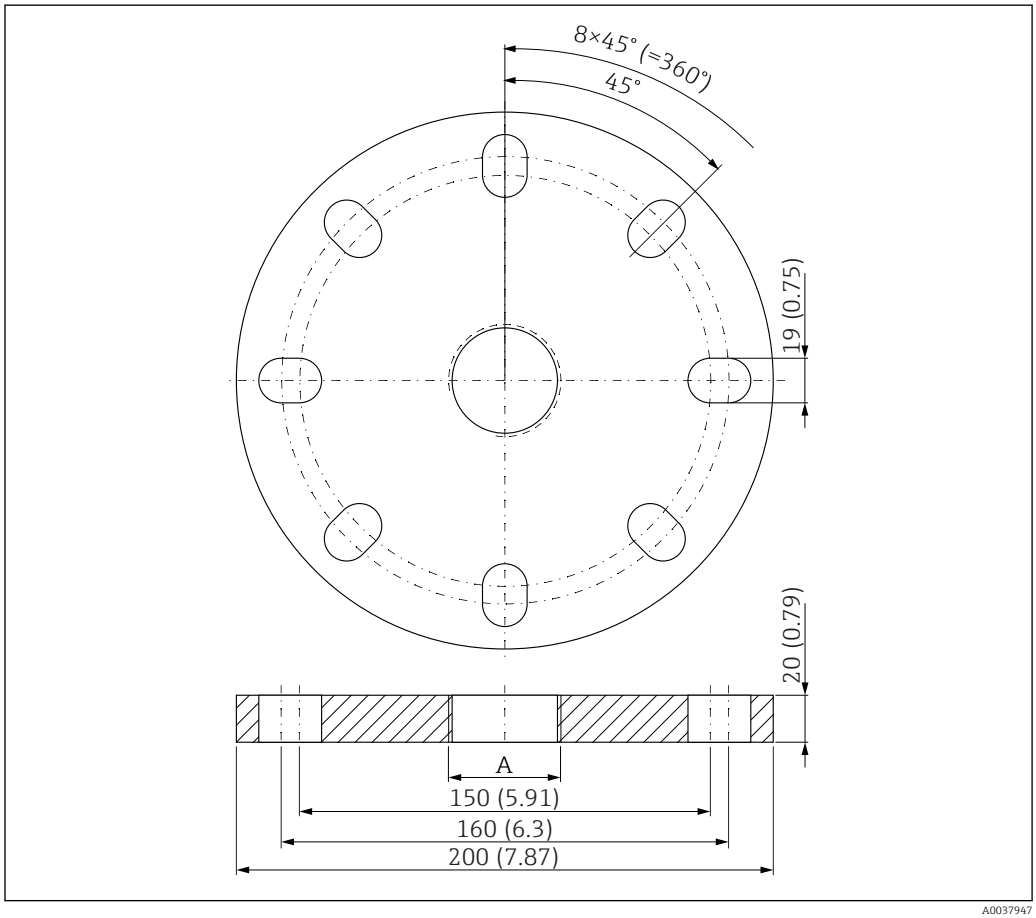

42 Dimensions of UNI flange 3"/DN80/80, engineering unit: mm (in)

A Sensor connection in accordance with product structure "Process connection on front" or "Process connection on rear"

Material
PP

Order number
FAX50-####

UNI flange 4"/DN100/100, PP

The UNI flange 4"/DN100/100 can be ordered together with the device via the product structure "Accessory enclosed".

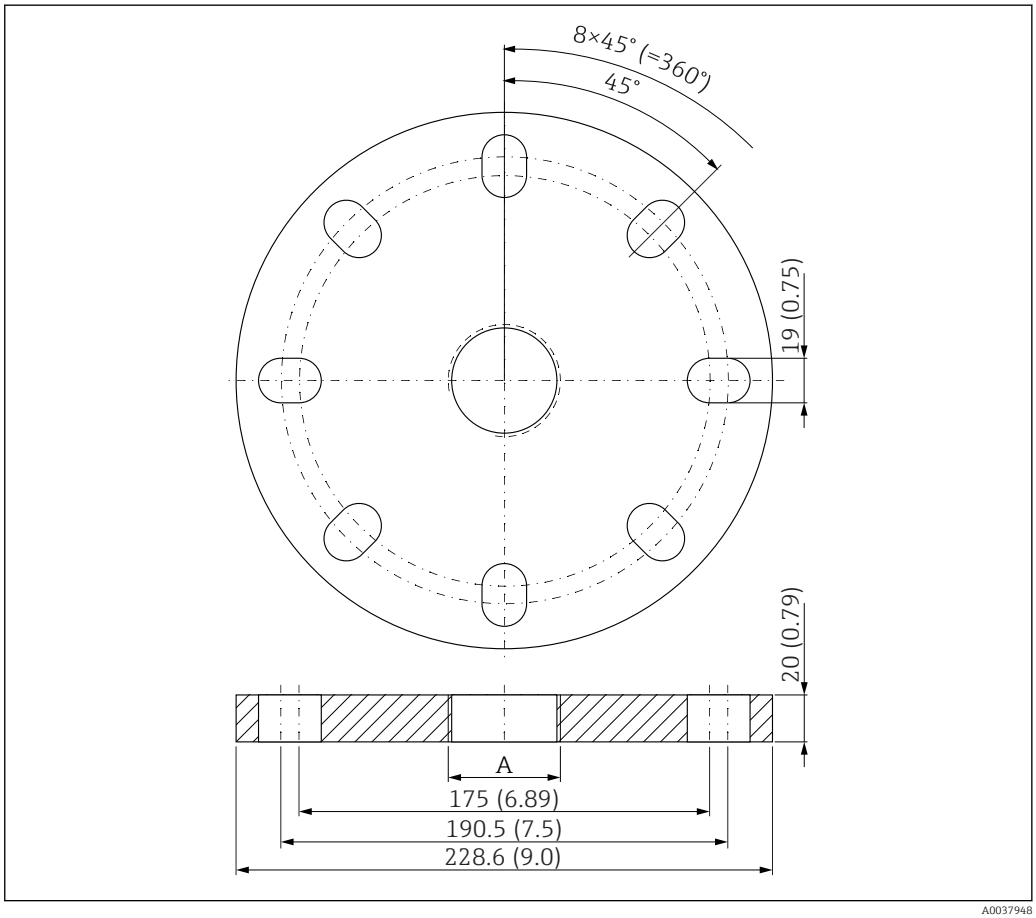

43 Dimensions of UNI flange 4"/DN100/100, engineering unit: mm (in)

A Sensor connection in accordance with product structure "Process connection on front" or "Process connection on rear"

Material
PP

Order number
FAX50-####

Angle bracket for wall mounting

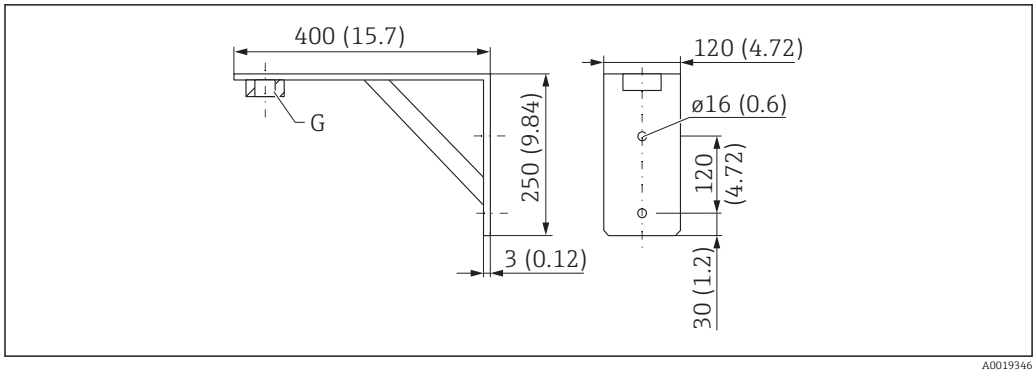

44 *Dimensions of angle bracket. Unit of measurement mm (in)*

G Sensor connection in accordance with product structure "Process connection on front"

Weight
3.4 kg (7.5 lb)

Material
316L (1.4404)

Order number for G 1-1/2" process connection
71452324
Also suitable for MNPT 1-1/2"

Order number for G 2" process connection
71452325
Also suitable for MNPT 2"

Cantilever with pivot

Installation type sensor process connection rear side

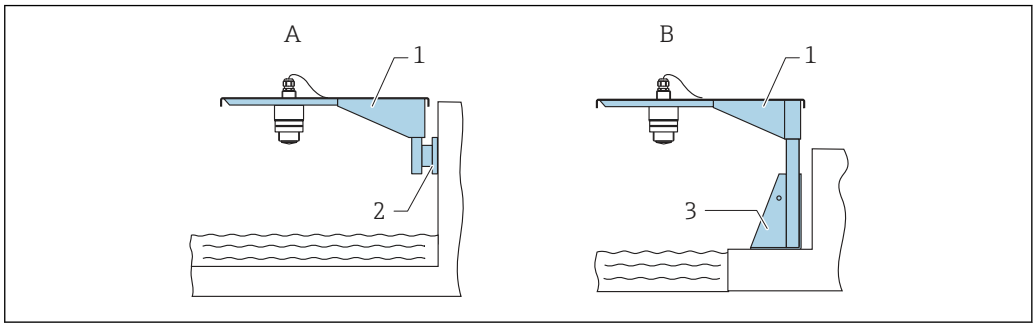

45 *Installation type sensor process connection rear side*

A Installation with cantilever and wall bracket
B Installation with cantilever and mounting frame
1 Cantilever
2 Wall bracket
3 Mounting frame

Cantilever (short) with pivot, sensor process connection on rear

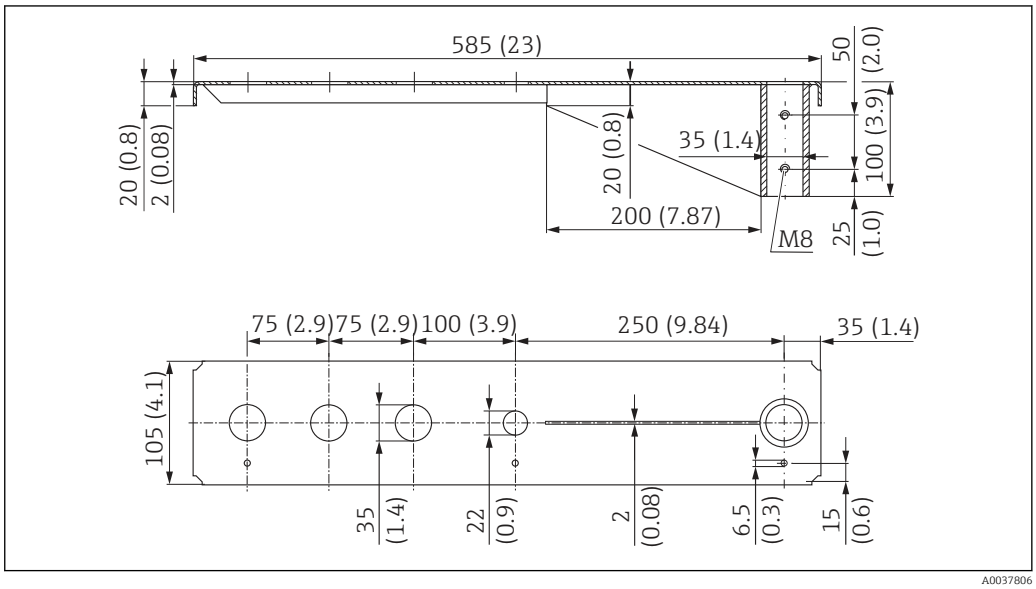

46 *Dimensions of cantilever (short) with pivot for sensor process connection on rear. Unit of measurement mm (in)*

Weight:
2.1 kg (4.63 lb)

Material
316L (1.4404)

Order number
71452315

- 35 mm (1.38 in) openings for all G 1" or MNPT 1" connections on rear
- 22 mm (0.87 in) opening can be used for an additional sensor
- Retaining screws are included in delivery

Cantilever (long) with pivot, sensor process connection on rear

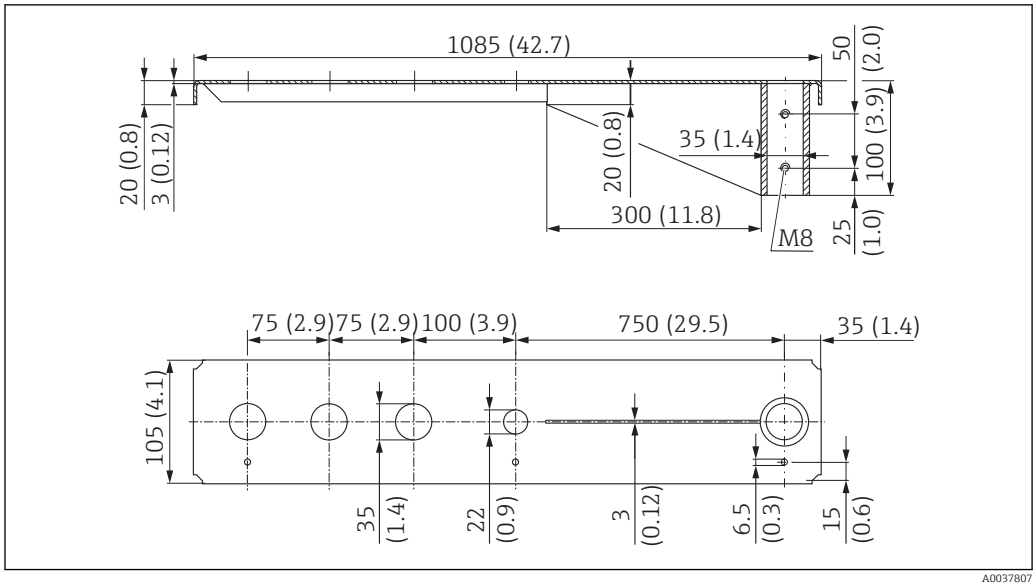

47 *Dimensions of cantilever (long) with pivot for sensor process connection on rear. Unit of measurement mm (in)*

Weight:
4.5 kg (9.92 lb)

Material
316L (1.4404)

Order number
71452316

- 35 mm (1.38 in) openings for all G 1" or MNPT 1" connections on rear
- 22 mm (0.87 in) opening can be used for an additional sensor
- Retaining screws are included in delivery

Installation type sensor process connection front side

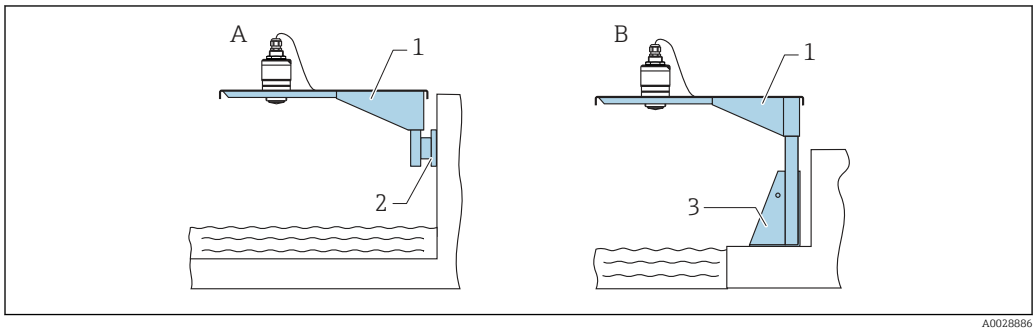

48 *Installation type sensor process connection front side*

A Installation with cantilever and wall bracket
B Installation with cantilever and mounting frame
1 Cantilever
2 Wall bracket
3 Mounting frame

Cantilever (short) with pivot, G 1-½" sensor process connection on front

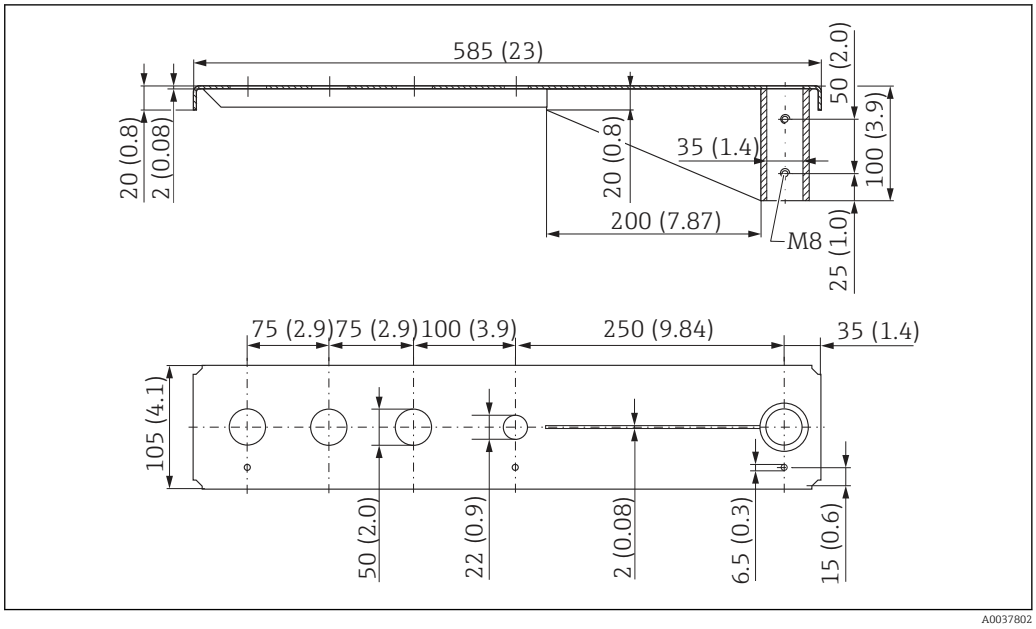

49 *Dimensions of cantilever (short) with pivot for G 1-½" sensor process connection on front. Unit of measurement mm (in)*

Weight:
1.9 kg (4.19 lb)

Material
316L (1.4404)

Order number
71452318

- 50 mm (2.17 in) openings for all G 1-½" (MNPT 1-½") connections on front
- 22 mm (0.87 in) opening can be used for an additional sensor
- Retaining screws are included in delivery

Cantilever (long) with pivot, G 1-½" sensor process connection on front

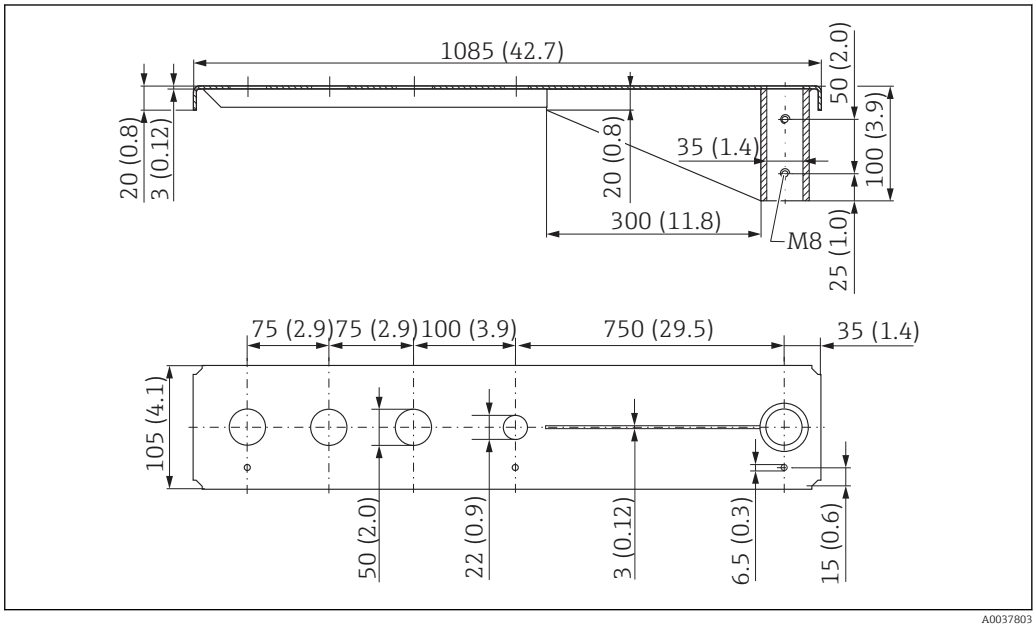

50 *Dimensions of cantilever (long) with pivot for G 1-½" sensor process connection on front. Unit of measurement mm (in)*

Weight:
4.4 kg (9.7 lb)

Material
316L (1.4404)

Order number
571452319

- 50 mm (2.17 in) openings for all G 1-½" (MNPT 1-½") connections on front
- 22 mm (0.87 in) opening can be used for an additional sensor
- Retaining screws are included in delivery

Cantilever (short) with pivot, G 2" sensor process connection on front

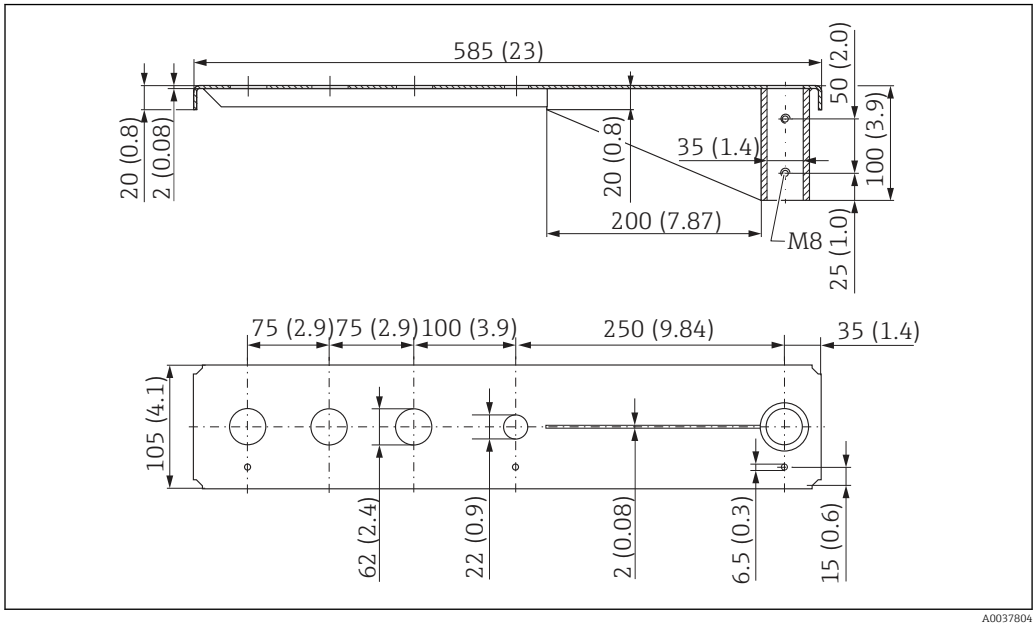

51 *Dimensions of cantilever (short) with pivot for G 2" sensor process connection on front. Unit of measurement mm (in)*

Weight:
1.9 kg (4.19 lb)

Material
316L (1.4404)

Order number
71452321

- 62 mm (2.44 in) openings for all G 2" (MNPT 2") connections on front
- 22 mm (0.87 in) opening can be used for an additional sensor
- Retaining screws are included in delivery

Cantilever (long) with pivot, G 2" sensor process connection on front

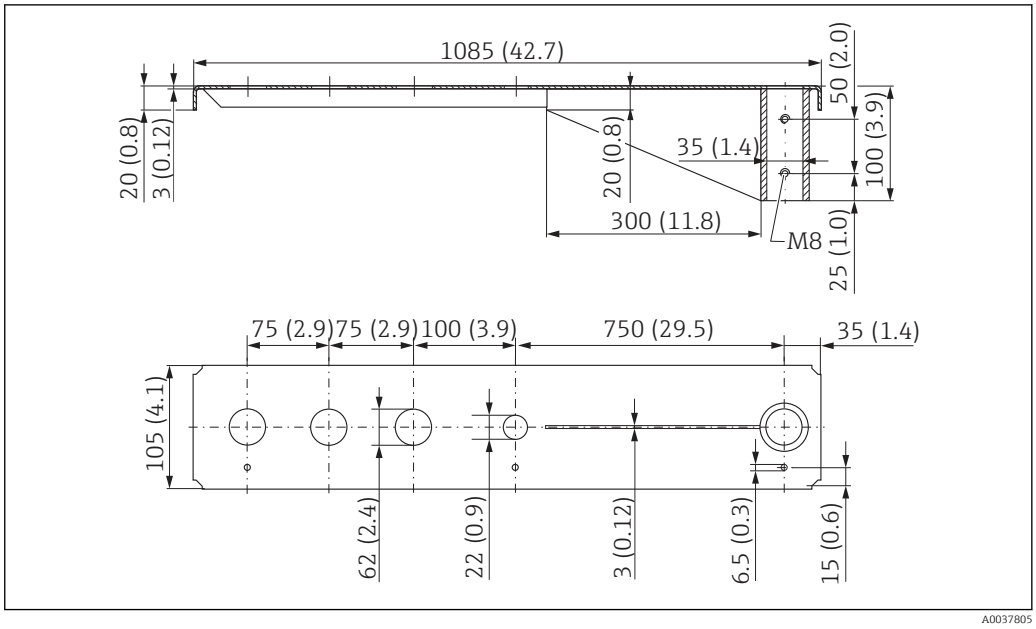

52 *Dimensions of cantilever (long) with pivot for G 2" sensor process connection on front. Unit of measurement mm (in)*

Weight:
4.4 kg (9.7 lb)

Material
316L (1.4404)

Order number
71452322

- 62 mm (2.44 in) openings for all G 2" (MNPT 2") connections on front
- 22 mm (0.87 in) opening can be used for an additional sensor
- Retaining screws are included in delivery

Mounting frame (short) for cantilever with pivot

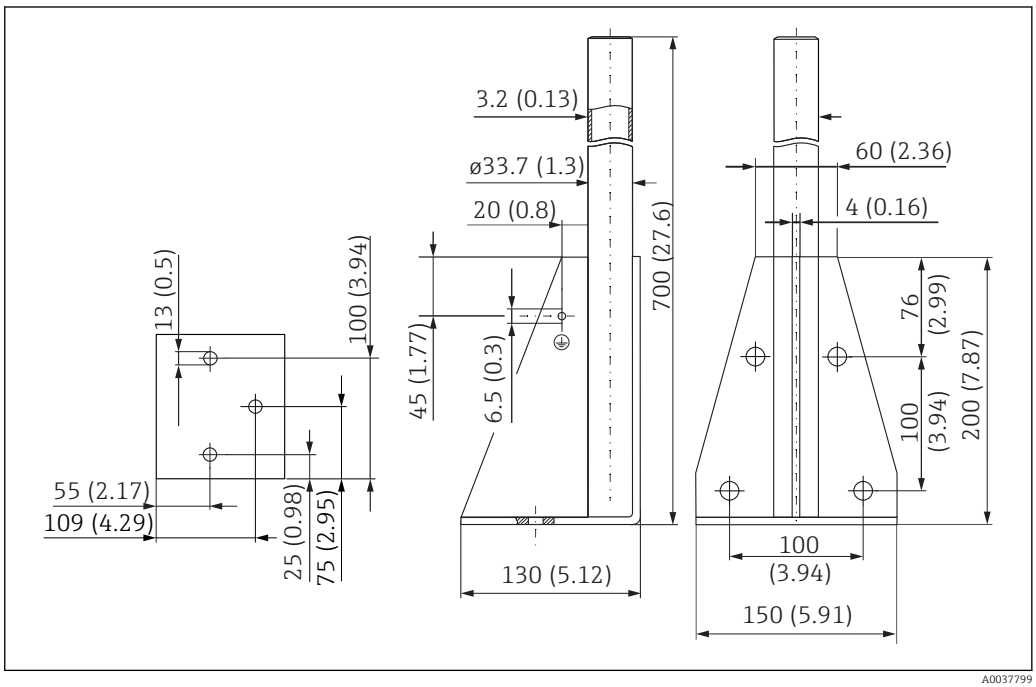

53 *Dimensions of mounting frame (short). Unit of measurement mm (in)*

Weight:
3.2 kg (7.06 lb)

Material
316L (1.4404)

Order number
71452327

Mounting frame (long) for cantilever with pivot

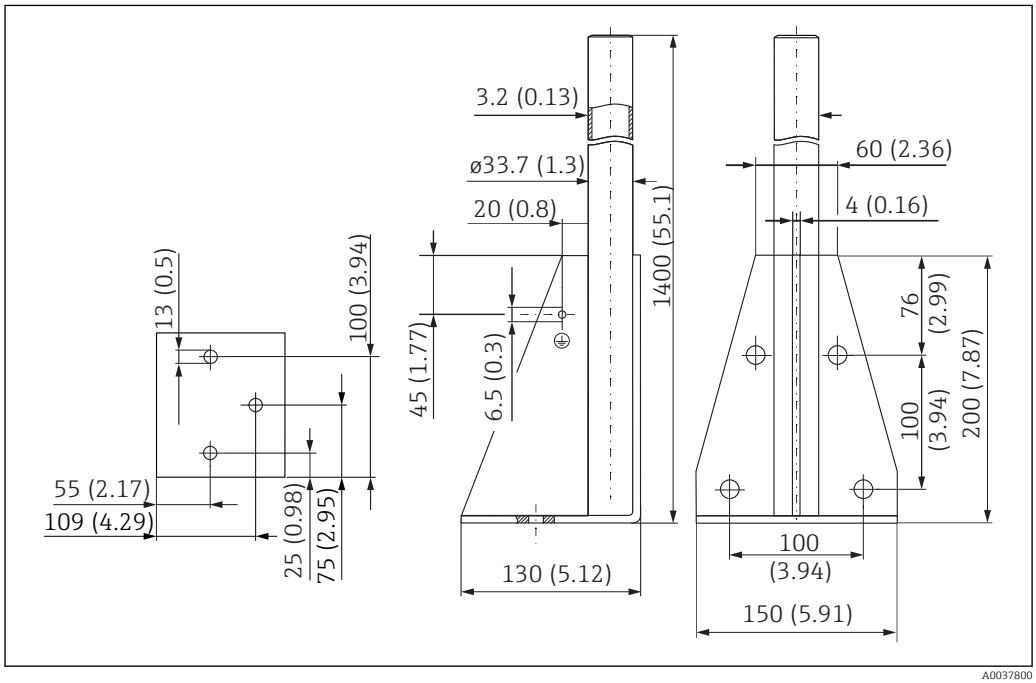

54 *Dimensions of mounting frame (long). Unit of measurement mm (in)*

Weight:
4.9 kg (10.08 lb)

Material
316L (1.4404)

Order number
71452326

Wall bracket for cantilever with pivot

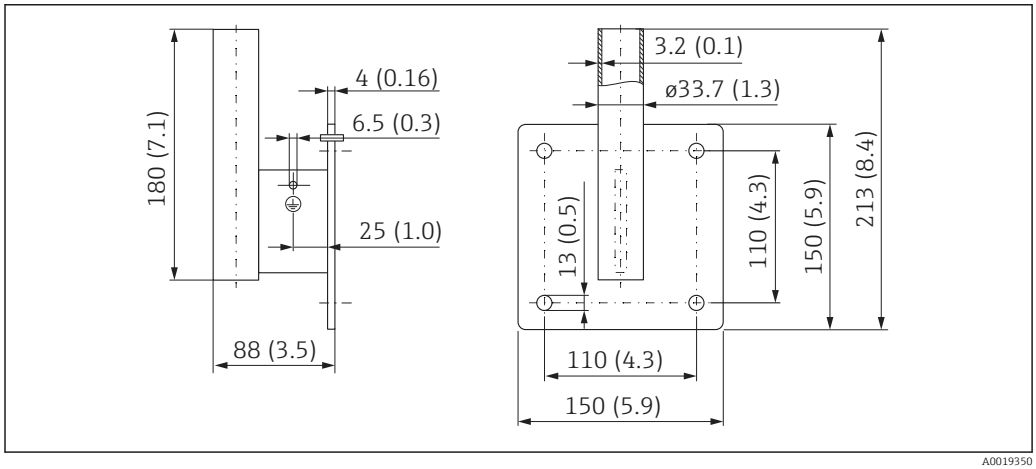

55 *Dimensions of the wall bracket. Unit of measurement mm (in)*

Weight
1.4 kg (3.09 lb)

Material
316L (1.4404)

Order number
71452323

Ceiling mounting bracket

The ceiling mounting bracket can be ordered together with the device via the "Accessory enclosed" section of the product order structure.

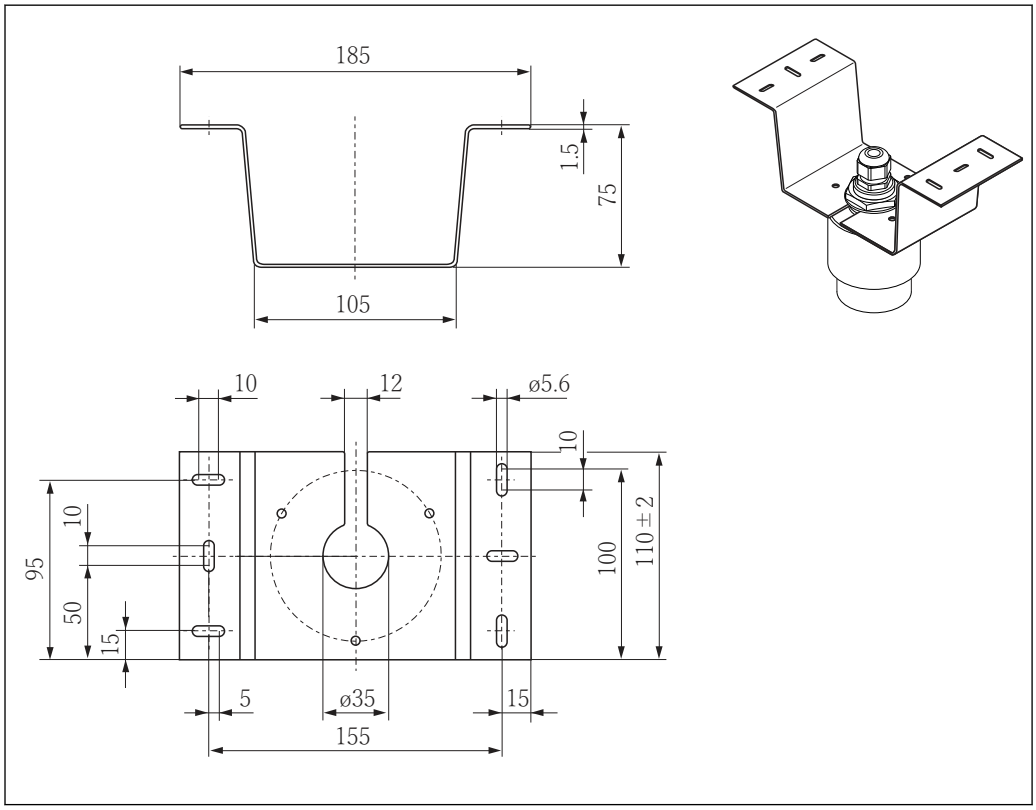

56 Dimensions of ceiling mounting bracket. Unit of measurement mm (in)

Material
316L (1.4404)

Order number
71093130

Pivoted mounting bracket for sewer channel

The pivotable mounting bracket is used to install the device in a manhole over a sewer channel.

The mounting bracket can be ordered together with the device via the "Accessory enclosed" section of the product order structure.

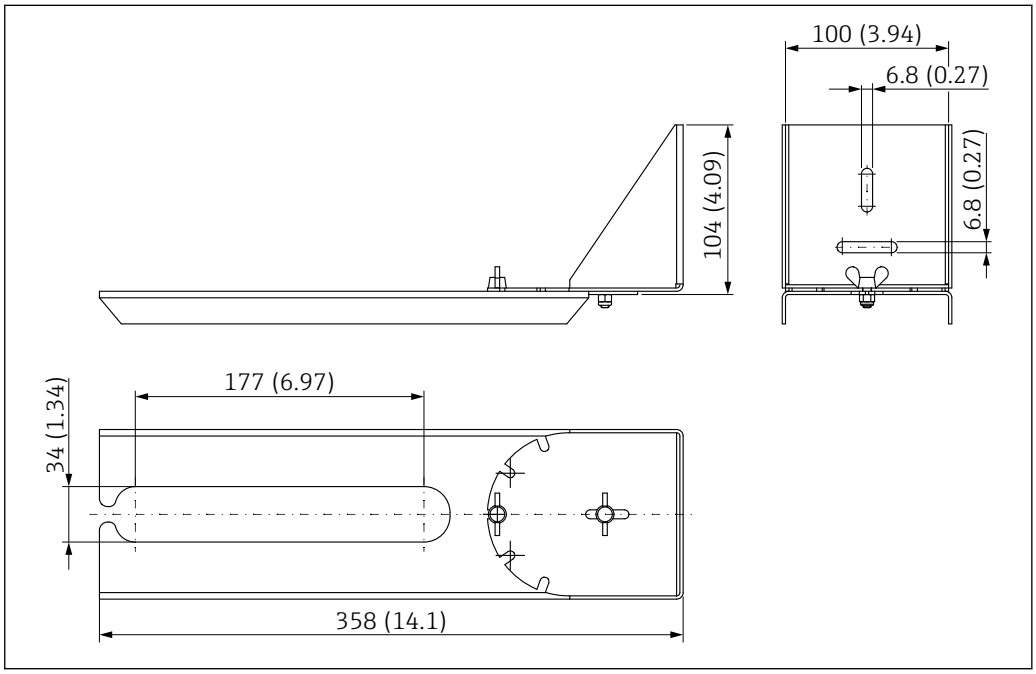

57 *Dimensions of pivotable mounting bracket. Unit of measurement mm (in)*

Material
316L (1.4404)

Order number
71429910

Horizontal mounting bracket for sewer shafts

The horizontal mounting bracket for sewer shafts is used to install the device in confined spaces.

The mounting bracket can be ordered together with the device via the "Accessory enclosed" section of the product order structure.

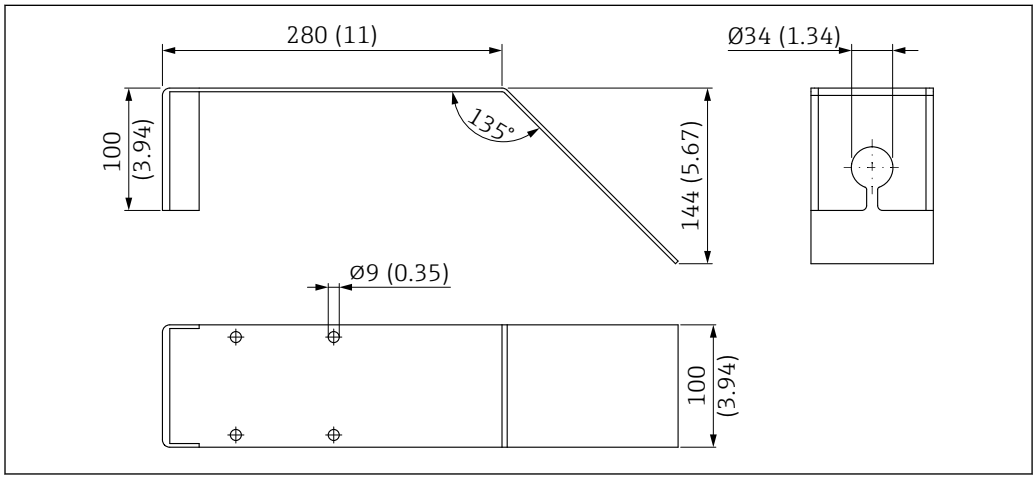

58 Dimensions of horizontal mounting bracket for sewer shafts. Unit of measurement mm (in)

Material
316L (1.4404)

Order number
71429905

RIA15 in the field housing

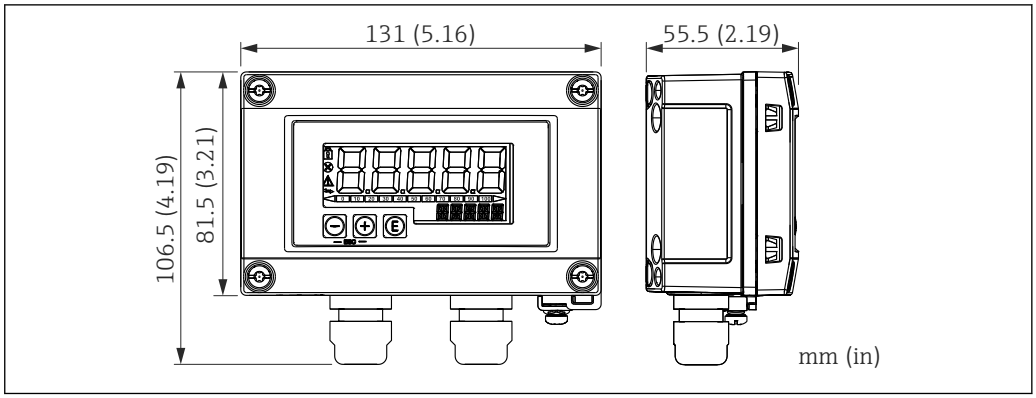

59 *Dimensions of RIA15 in field housing, engineering unit: mm (in)*

The RIA15 remote indicator can be ordered together with the device. Product structure, feature 620 "Accessories enclosed":

- Option R4 "Remote indicator RIA15 non-hazardous area, field housing"
- Option R5 "Remote indicator RIA15 Ex= explosion protection approval, field housing"

Field housing material: Plastic (PBT with steel fibers, antistatic)

Other housing versions are available via the RIA15 product structure.

Alternatively available as an accessory, for details see Technical Information TI01043K and Operating Instructions BA01170K

HART communication resistor

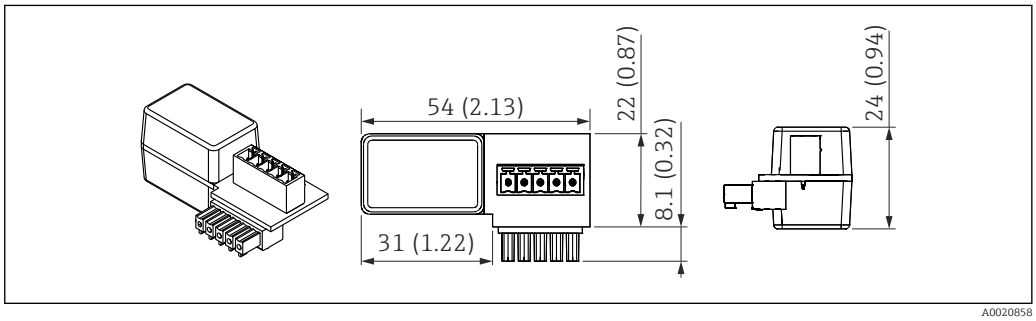

60 *Dimensions of HART communication resistor, engineering unit: mm (in)*

A communication resistor is required for HART communication. If this is not already present (e.g. in the power supply RMA, RN221N, RNS221, ...), it can be ordered with the device via the product structure, feature 620 "Accessories enclosed": option R6 "HART communication resistor hazardous / non-hazardous area".

Alternatively, it is available as an accessory; order number "RK01-BC"

Alternatively available as an accessory, for details see Technical Information TI01043K and Operating Instructions BA01170K

The HART communication resistor is specially designed for use with the RIA15 and can be attached easily.

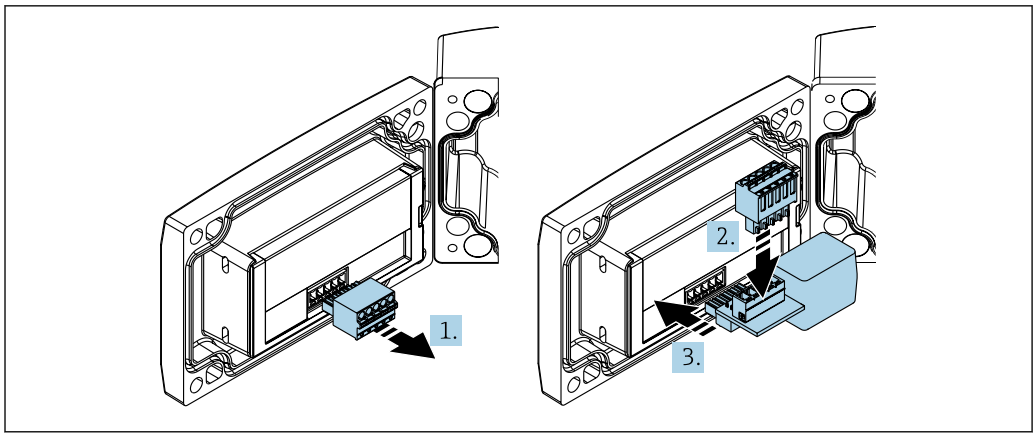

A0020844

1. Disconnect plug-in terminal block.
2. Insert the terminal block into the slot provided on the HART communication resistor module.
3. Insert the HART communication resistor in the slot in the housing.

Communication-specific accessories

Commubox FXA195 HART
For intrinsically safe HART communication with FieldCare / DeviceCare via the USB interface.

For details, see Technical Information TI00404F

HART Loop Converter HMX50
Is used to evaluate and convert dynamic HART process variables to analog current signals or limit values.
Order number: 71063562

For details, see Technical Information TI00429F and Operating Instructions BA00371F

WirelessHART adapter SWA70
Is used for the wireless connection of field devices.
The WirelessHART adapter can be easily integrated into field devices and existing infrastructures, offers data protection and transmission safety and can be operated in parallel with other wireless networks.

For details, see Operating Instructions BA00061S

Service-specific accessories

Applicator
Software for selecting and sizing Endress+Hauser measuring devices:
- Calculation of all the necessary data for identifying the optimum measuring device: e.g. pressure loss, accuracy or process connections.
- Graphic illustration of the calculation results

Administration, documentation and access to all project-related data and parameters over the entire life cycle of a project.

Applicator is available:
https://portal.endress.com/webapp/applicator

Configurator
Product Configurator - the tool for individual product configuration
- Up-to-the-minute configuration data
- Depending on the device: Direct input of measuring point-specific information such as measuring range or operating language
- Automatic verification of exclusion criteria
- Automatic creation of the order code and its breakdown in PDF or Excel output format
- Ability to order directly in the Endress+Hauser Online Shop

The Configurator is available on the Endress+Hauser website: www.endress.com -> Click "Corporate" -> Select your country -> Click "Products" -> Select the product using the filters and the search field -> Open the product page -> The "Configure" button to the right of the product image opens the Product Configurator.

DeviceCare SFE100
Configuration tool for HART, PROFIBUS and FOUNDATION Fieldbus field devices
DeviceCare is available for download at www.software-products.endress.com. You need to register in the Endress+Hauser software portal to download the application.

Technical Information TI01134S

FieldCare SFE500
FDT-based plant asset management tool
It can configure all smart field units in your system and helps you manage them. By using the status information, it is also a simple but effective way of checking their status and condition.

Technical Information TI00028S

W@M
Life cycle management for your plant
W@M supports you with a wide range of software applications over the entire process: from planning and procurement, to the installation, commissioning and operation of the measuring devices. All the relevant device information, such as the device status, spare parts and device-specific documentation, is available for every device over the entire life cycle.
The application already contains the data of your Endress+Hauser device. Endress+Hauser also takes care of maintaining and updating the data records.

W@M is available:
www.endress.com/lifecyclemanagement

System components

Memograph M graphic data manager
The Memograph M graphic data manager provides information on all the relevant process variables. Measured values are recorded correctly, limit values are monitored and measuring points analyzed. The data are stored in the 256 MB internal memory and also on an SD card or USB stick.

For details, see Technical Information TI01180R and Operating Instructions BA01338R

RNS221
Supply unit for powering two 2-wire measuring devices. Bidirectional communication is possible via the HART communication jacks.

For details, see Technical Information TI00081R and Brief Operating Instructions KA00110R

RN221N
Active barrier with power supply for safe separation of 4 to 20 mA standard signal circuits. Bidirectional HART communication is possible via integrated communication jacks (R=250 Ω).

For details, see Technical Information TI073R and Operating Instructions BA202R

RMA42
Digital process transmitter for monitoring and displaying analog measured values

For details, see Technical Information TI00150R and Operating Instructions BA00287R

RIA452
RIA452 digital process indicator, panel mounted housing for monitoring and displaying analog measured values with batch and pump control functions and flow calculation

For details, see Technical Information TI113R and Operating Instructions BA00254R

HAW562
Overvoltage protection device for DIN rail as per IEC 60715, suitable for protecting electronics against destruction as a result of overvoltage.

For details, see Technical Information TI01012K

Supplementary documentation

The following documentation types are available in the Downloads section of the Endress+Hauser website (www.endress.com/downloads):

For an overview of the scope of the associated Technical Documentation, refer to the following:
- *W@M Device Viewer* (www.endress.com/deviceviewer): Enter the serial number from nameplate
- *Endress+Hauser Operations App*: Enter the serial number from the nameplate or scan the 2D matrix code (QR code) on the nameplate

Brief Operating Instructions (KA)

Guide that takes you quickly to the 1st measured value
The Brief Operating Instructions contain all the essential information from incoming acceptance to initial commissioning.

Operating Instructions (BA)

Your reference guide
These Operating Instructions contain all the information that is required in various phases of the life cycle of the device: from product identification, incoming acceptance and storage, to mounting, connection, operation and commissioning through to troubleshooting, maintenance and disposal.

Safety Instructions (XA)

Depending on the approval, the following Safety Instructions (XA) are supplied with the device. They are an integral part of the Operating Instructions.

The nameplate indicates the Safety Instructions (XA) that are relevant to the device.

Registered trademarks

HART®
Registered trademark of the FieldComm Group, Austin, Texas, USA

Apple®
Apple, the Apple logo, iPhone, and iPod touch are trademarks of Apple Inc., registered in the U.S. and other countries. App Store is a service mark of Apple Inc.

Android®
Android, Google Play and the Google Play logo are trademarks of Google Inc.

Bluetooth®
The *Bluetooth*® word mark and logos are registered trademarks owned by the Bluetooth SIG, Inc. and any use of such marks by Endress+Hauser is under license. Other trademarks and trade names are those of their respective owners.



www.addresses.endress.com

Endress+Hauser

People for Process Automation