Level Pressure Flow Temperature Liquid Analysis Registration Systems Components Services Solutions

Operating Instructions

Prosonic M FMU40/41/42/43/44

Ultrasonic Level Measurement

HART COMMUNICATION PROTOCOL

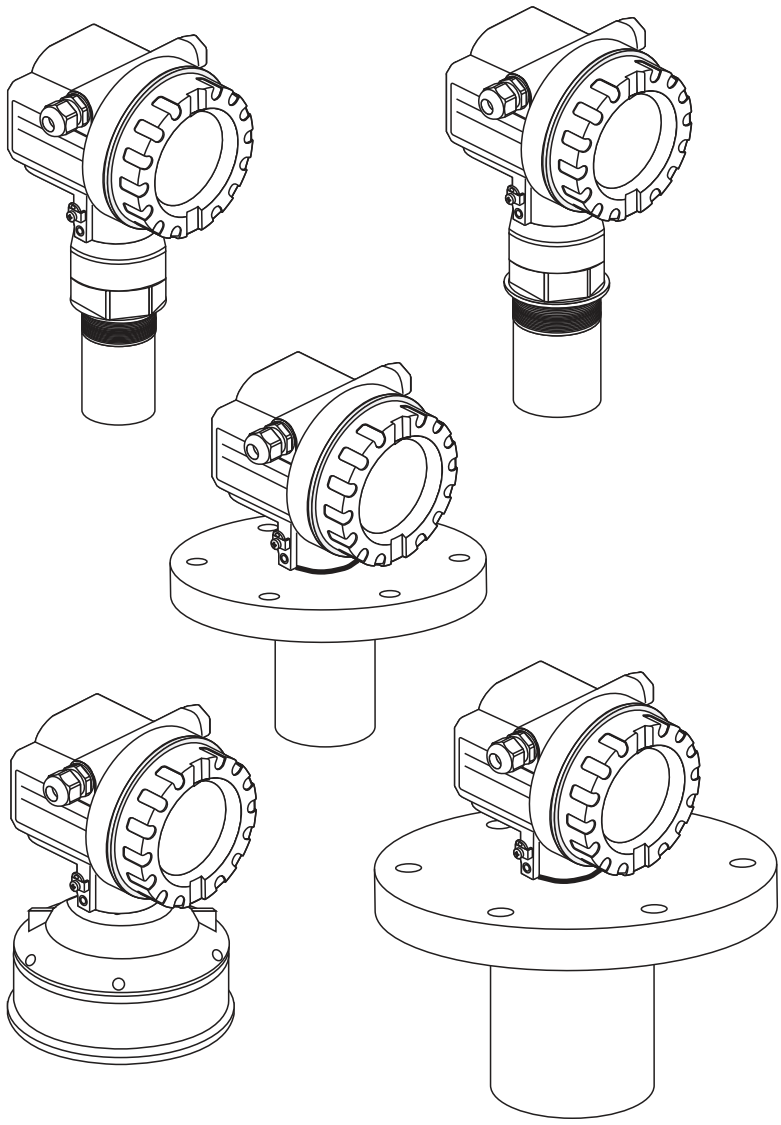

BA00237F/00/EN/13.12
71164384

Valid as of software version:
V 01.04.00 (amplifier)
V 01.04.00 (communication)

Endress+Hauser

People for Process Automation

Brief operating instructions

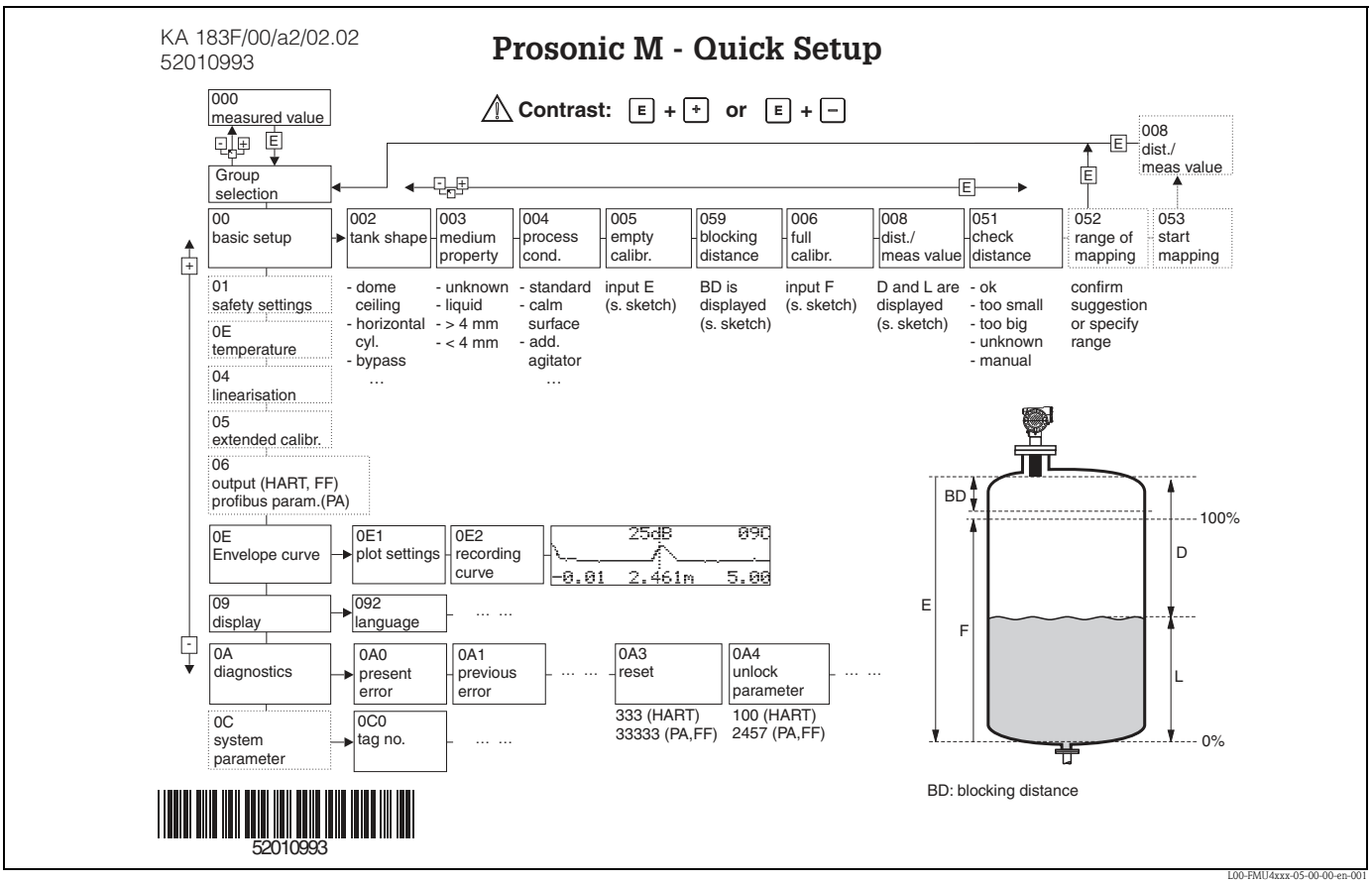

Contents of the operating instructions

This operating instructions describes the installation and commissioning of the Prosonic M ultrasonic level transmitter. It contains all the functions required for a normal measuring operation. Also, the Prosonic M provides additional functions for optimising the measuring point and for converting the measured value. These functions are not included in this operating instructions.

You can find an **overview of all the device functions** in the Appendix.

You can find a **detailed description of all the device functions** in the operating instructions BA00240F/00/EN "Prosonic M – Description of Instrument Functions". This is located on the supplied documentation CD-ROM.

Table of contents

1 Safety instructions 4

1.1 Designated use 4
1.2 Installation, commissioning, operation 4
1.3 Operational safety and process safety 4
1.4 Notes on safety conventions and symbols 5

2 Identification 6

2.1 Nameplate 6
2.2 Product structure FMU40 7
2.3 Product structure FMU41 9
2.4 Product structure FMU42 10
2.5 Product structure FMU43 12
2.6 Product structure FMU44 13
2.7 Scope of delivery 15
2.8 Certificates and approvals 15
2.9 Registered trademarks 15

3 Installation 16

3.1 Design; dimensions 16
3.2 Installation variants 19
3.3 Installation conditions 21
3.4 Measuring range 24
3.5 Installation hint for FMU40, FMU41 25
3.6 Turn housing 26
3.7 Installation check 26

4 Wiring 27

4.1 Electrical connection 27
4.2 Terminal assignment 29
4.3 Supply voltage 29
4.4 Potential matching 30
4.5 Checking the connection 30

5 Operation 31

5.1 Display and operating elements 31
5.2 Function codes 33
5.3 Operating options 34
5.4 Operation using the on-site display VU331 35
5.5 HART communication 36
5.6 Lock/unlock configuration 38
5.7 Resetting the customer parameters 39
5.8 Resetting an interference echo suppression (tank map) 39

6 Commissioning 40

6.1 Function check 40
6.2 Power up instrument 40
6.3 Basic calibration 41
6.4 Envelope curve 48

7 Troubleshooting 51

7.1 System error messages 51
7.2 Application errors 53

8 Maintenance and repairs 55

8.1 Exterior cleaning 55
8.2 Repairs 55
8.3 Repairs to Ex-approved devices 55
8.4 Replacement 55
8.5 Spare Parts 56
8.6 Return 57
8.7 Disposal 57
8.8 Software history 57
8.9 Contact addresses of Endress+Hauser 57

9 Accessories 58

9.1 Weather protection cover 58
9.2 Installation bracket for FMU40, FMU41 58
9.3 Screw in flange 59
9.4 Cantilever 60
9.5 Mounting Frame 61
9.6 Wall Bracket 61
9.7 Mounting bracket for FMU42, FMU43, FMU44 . . . 62
9.8 Commubox FXA195 HART 62
9.9 Commubox FXA291 62
9.10 ToF Adapter FXA291 62
9.11 Remote display FHX40 63

10 Technical Data 65

10.1 Technical data at a glance 65

11 Appendix 70

11.1 Operating menu 70
11.2 Measuring principle 72

Index 74

1 Safety instructions

1.1 Designated use

The Prosonic M is a compact measuring device for continuous, non-contact level measurement. Depending on the sensor, the measuring range is up to 20 m (66 ft) in fluids and up to 10 m (33 ft) in bulk solids. By using the linearisation function, the Prosonic M can also be used for flow measurements in open channels and measuring weirs.

1.2 Installation, commissioning, operation

The Prosonic M is fail-safe and is constructed to the state-of-the-art. It meets the appropriate standards and EC directives. However, if you use it improperly or other than for its designated use, it may pose application-specific hazards, e.g. product overflow due to incorrect installation or configuration. Installation, electrical connection, start-up, operation and maintenance of the measuring device must therefore be carried out exclusively by trained specialists authorised by the system operator. Technical personnel must have read and understood these operating instructions and must adhere to them. You may only undertake modifications or repair work to the device when it is expressly permitted by the operating instructions.

1.3 Operational safety and process safety

Alternative monitoring measures must be taken to ensure operational safety and process safety during configuration, testing and maintenance work on the device.

Hazardous areas

Measuring systems for use in hazardous environments are accompanied by separate "Ex documentation", which is an integral part of this Operating Manual. Strict compliance with the installation instructions and ratings as stated in this Additional documentation is mandatory.

- Ensure that all personnel are suitably qualified.
- Observe the specifications in the certificate as well as national and local regulations.

1.4 Notes on safety conventions and symbols

In order to highlight safety-relevant or alternative operating procedures in the manual, the following conventions have been used, each indicated by a corresponding symbol in the margin.

Safety conventions	
	**Warning!** A warning highlights actions or procedures which, if not performed correctly, will lead to personal injury, a safety hazard or destruction of the instrument
	**Caution!** Caution highlights actions or procedures which, if not performed correctly, may lead to personal injury or incorrect functioning of the instrument
	**Note!** A note highlights actions or procedures which, if not performed correctly, may indirectly affect operation or may lead to an instrument response which is not planned
Explosion protection	
	**Device certified for use in explosion hazardous area** If the device has this symbol embossed on its name plate it can be installed in an explosion hazardous area
	**Explosion hazardous area** Symbol used in drawings to indicate explosion hazardous areas. Devices located in and wiring entering areas with the designation “explosion hazardous areas” must conform with the stated type of protection.
	**Safe area (non-explosion hazardous area)** Symbol used in drawings to indicate, if necessary, non-explosion hazardous areas. Devices located in safe areas still require a certificate if their outputs run into explosion hazardous areas
Electrical symbols	
	**Direct voltage** A terminal to which or from which a direct current or voltage may be applied or supplied
	Alternating voltage A terminal to which or from which an alternating (sine-wave) current or voltage may be applied or supplied
	**Grounded terminal** A grounded terminal, which as far as the operator is concerned, is already grounded by means of an earth grounding system
	**Protective grounding (earth) terminal** A terminal which must be connected to earth ground prior to making any other connection to the equipment
	**Equipotential connection (earth bonding)** A connection made to the plant grounding system which may be of type e.g. neutral star or equipotential line according to national or company practice
	**Temperature resistance of the connection cables** States, that the connection cables must be resistant to a temperature of at least 85 °C (185 °F).

2 Identification

2.1 Nameplate

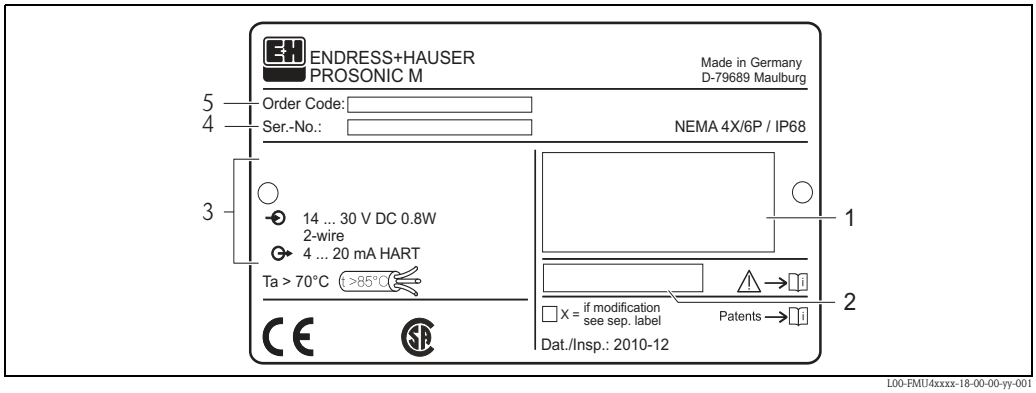

1 Designation according to Directive 94/9/EC and designation of the type of protection (only for certified device variants)
2 Reference to additional safety-relevant documentation (only for certified device variants)
3 Communication variant and supply voltage
4 Serial number
5 Order Code

2.2 Product structure FMU40

This overview does not mark options which are mutually exclusive.

010	**Certificates**	
	A	Variant for non-hazardous area
	E	NEPSI Ex nA II T6
	G	ATEX II 3G Ex nA IIC T6
	I	NEPSI Ex ia IIC T6
	J	NEPSI Ex d(ia) IIC T6
	K	TIIS EEx ia II C T6
	N	CSA General Purpose
	Q	NEPSI DIP
	S	FM IS Cl. I,II,III Div. 1 Gr. A-G / NI Cl. I Div. 2
	T	FM XP Cl. I,II,III Div. 1 Gr. A-G
	U	CSA IS Cl. I,II,III Div. 1 Gr. A-G / NI Cl. I Div. 2
	V	CSA XP Cl. I,II,III Div. 1 Gr. A-G
	1	ATEX II 1/2G EEx ia IIC T6
	2	ATEX II 1/2D, Alu blind cover
	4	ATEX II 1/2G EEx d (ia) IIC T6
	5	ATEX II 1/3D
	6	ATEX II 3D Ex t IIIC T* °C Dc
	Y	Special certificate

020	**Process connection**	
	R	G 1½“ threadISO 228
	N	NPT 1½“ – 11,5 thread
	Y	Special version

030	**Power supply/communication**	
	B	2 wire, 4 to 20mA-loop/HART
	H	4 wire, 10,5 to 32VDC / 4-20mA HART
	G	4 wire, 90 to 253VAC / 4-20mA HART
	D	2 wire, PROFIBUS PA
	F	2 wire, FOUNDATION Fieldbus
	J	2-wire; 4-20mA HART, 5-point linearity protocol
	K	2-wire; PROFIBUS PA, 5-point linearity protocol
	L	2-wire; FOUNDATION Fieldbus, 5-point linearity protocol
	M	4-wire 90-250VAC; 4-20mA HART,5-point linearity protocol
	N	4-wire 10.5-32VDC;4-20mA HART,5-point linearity protocol
	Y	Special version

040	**Display / on-site operation**	
	1	Without LC display
	2	With LC display VU331 incl. on-site operation
	3	Prepared for remote display FHX 40
	9	Special version

050	**Housing**	
	A	Aluminium F12 housing coated to IP68 NEMA6P
	C	Aluminium T12 housing coated to IP68 NEMA6P; with separate terminal compartment
	D	Aluminium T12 housing coated to IP68 NEMA6P+OVP; with separate terminal compartment; with overvoltage protection
	9	Special version

060	**Screw union/entry**	
	2	M20x1.5 screw union
	3	G 1/2“ entry
	4	NPT 1/2“ entry
	5	M12 PROFIBUS-PA plug-in connector
	6	7/8" FF plug
	9	Special version

995		Marking
	1	Tagging (TAG)
	2	Bus address
FMU40 –		Product designation

2.3 Product structure FMU41

010	**Certificates**								
	A	Variant for non-hazardous area							
	E	NEPSI Ex nA II T6							
	G	ATEX II 3G Ex nA IIC T6							
	I	NEPSI Ex ia IIC T6							
	J	NEPSI Ex d(Ia) IIC T6							
	K	TIIS EEx ia IIC T6							
	N	CSA General Purpose							
	Q	NEPSI DIP							
	S	FM IS Cl. I,II,III Div. 1 Gr. A-G / NI Cl.I Div.2, zone 0,1,2							
	T	FM XP Cl. I,II,III Div. 1 Gr. A-G /zone 1,2							
	U	CSA IS Cl. I,II,III Div. 1 Gr. A-G / NI Cl. I Div. 2, zone 0,1,2							
	V	CSA XP Cl. I,II,III Div. 1 Gr. A-G / zone 1,2							
	1	ATEX II 1/2G EEx ia IIC T6							
	2	ATEX II 1/2D, Alu blind cover							
	4	ATEX II 1/2G EEx d (ia) IIC T6							
	5	ATEX II 1/3D							
	6	ATEX II 3D Ex t IIIC T* °C Dc							
	Y	Special certificate							
020		**Process connection**							
	R	G 2“ threadISO 228							
	N	NPT 2“ - 11,5 thread							
	Y	Special version							
030			**Power supply/communication**						
		B	2 wire, 4 to 20mA-loop/HART						
		H	4 wire, 10,5 to 32VDC / 4-20mA HART						
		G	4 wire, 90 to 253VAC / 4-20mA HART						
		D	2 wire, PROFIBUS PA						
		F	2 wire, FOUNDATION Fieldbus						
		J	2-wire; 4-20mA HART, 5-point linearity protocol						
		K	2-wire; PROFIBUS PA, 5-point linearity protocol						
		L	2-wire; FOUNDATION Fieldbus, 5-point linearity protocol						
		M	4-wire 90-250VAC; 4-20mA HART,5-point linearity protocol						
		N	4-wire 10.5-32VDC;4-20mA HART,5-point linearity protocol						
		Y	Special version						
040				**Display / on-site operation**					
				1	Without LC display				
				2	With LC display VU331 incl. on-site operation				
				3	Prepared for remote display FHX 40				
				9	Special version				
050					**Housing**				
					A	Aluminium F12 housing coated to IP 68 NEMA 6P			
					C	Aluminium T12 housing coated to IP 68 NEMA 6P; with separate terminal compartment			
					D	Aluminium T12 housing coated to IP 68 NEMA 6P; with separate terminal compartment; with overvoltage protection			
					9	Special version			
060						**Screw union/entry**			
						2	M20x1.5 screw union		
						3	G 1/2“ entry		
						4	NPT 1/2“ entry		
						5	M12 PROFIBUS-PA plug-in connector		
						6	7/8" FF plug		
						9	Special version		
995							Marking		
							1	Tagging (TAG)	
							2	Bus address	
FMU41 -									Product designation

2.4 Product structure FMU42

010	Certificates
A	Variant for non-hazardous area
E	NEPSI Ex nA II T6
G	ATEX II 3G Ex nA IIC T6
I	NEPSI Ex ia IIC T6
J	NEPSI Ex d (Ia) IIC T6
K	TIIS EEx ia II C T6 (in preparation)
N	CSA General Purpose
Q	NEPSI DIP
S	FM IS Cl. I,II,III Div. 1 Gr. A-G / NI Cl. I Div. 2
T	FM XP Cl. I,II,III Div. 1 Gr. A-G
U	CSA IS Cl. I,II,III Div. 1 Gr. A-G / NI Cl. I Div. 2
V	CSA XP Cl. I,II,III Div. 1 Gr. A-G
1	ATEX II 1/2 G EEx ia IIC T6
2	ATEX II 1/2 D, Alu blind cover
4	ATEX II 1/2 G EEx d [ia] IIC T6
5	ATEX II 1/3D
6	ATEX II 3D Ex t IIIC T* °C Dc
Y	Special certificate

020	Process connection
M	Mounting bracket FAU20
P	UNI flange 3"/DN80/80, PP, max. 2.5bar abs./ 36psia suitable for 3" 150lbs / DN80 PN16 / 10K 80
Q	UNI flange 3"/DN80/80, PVDF, max. 2.5bar abs./ 36psia suitable for 3" 150lbs / DN80 PN16 / 10K 80
S	UNI flange 3"/DN80/80, 316L, max. 2.5bar abs./ 36psia suitable for 3" 150lbs / DN80 PN16 / 10K 80
T	UNI flange 4"/DN100/100, PP, max. 2.5bar abs./ 36psia suitable for 4" 150lbs / DN100 PN16 / 10K100
U	UNI flange 4"/DN100/100, PVDF, max. 2.5bar abs./ 36psia suitable for 4" 150lbs / DN100 PN16 / 10K100
V	UNI flange 4"/DN100/100, 316L, max. 2.5bar abs./ 36psia suitable for 4" 150lbs / DN100 PN16 / 10K100
Y	Special version

030	Power supply/communication
B	2 wire, 4 to 20mA-loop/HART
H	4 wire, 10,5 to 32VDC / 4-20mA HART
G	4 wire, 90 to 253VAC / 4-20mA HART
D	2 wire, PROFIBUS PA
F	2 wire, FOUNDATION Fieldbus
J	2-wire; 4-20mA HART, 5-point linearity protocol
K	2-wire; PROFIBUS PA, 5-point linearity protocol
L	2-wire; FOUNDATION Fieldbus, 5-point linearity protocol
M	4-wire 90-250VAC; 4-20mA HART,5-point linearity protocol
N	4-wire 10.5-32VDC;4-20mA HART,5-point linearity protocol
Y	Special version

040	Display / on-site operation
1	Without LC display
2	With LC display VU331 incl. on-site operation
3	Prepared for remote display FHX 40
9	Special version

050	Housing
A	Aluminium F12 housing coated to IP 68 NEMA 6P
C	Aluminium T12 housing coated to IP 68 NEMA 6P, with separate terminal compartment
D	Aluminium T 12 housing coated to IP 68 NEMA 6P, with separate terminal compartment; with overvoltage protection
Y	Special version

060		**Gland/Entry**
	2	M20x1.5 gland
	3	G 1/2“ entry
	4	NPT 1/2“ entry
	5	M12 PROFIBUS-PA plug
	6	7/8" FF plug
	9	Special version
070		**Sealing Sensor/Flange**
	2	VITON flat sealing
	3	EPDM flat sealing
	9	special version
080		**Additional options**
	A	Additional options not selected
995		Marking
	1	Tagging (TAG)
	2	Bus address
FMU42 –		Product designation

2.5 Product structure FMU43

010	**Certificates**								
	A	Variant for non-hazardous area							
	2	ATEX II 1/2D, Alu blind cover							
	5	ATEX II 1/3D							
	6	ATEX II 3D Ex t IIIC T* °C Dc							
	M	FM DIP Cl.II Div.1 Gr.E-G, NI Cl.I Div.2, Zone 2							
	N	CSA General Purpose							
	P	CSA DIP Cl.II Div.1 Gr.E-G, NI Cl.I Div.2, zone 2							
	Q	NEPSI DIP							
	Y	Special version							
020		**Process connection/material**							
	P	Flange DN 100/ANSI 4"/JIS 16K100, PP (universal slip-on flange included)							
	S	Flange DN 100/ANSI 4"/JIS 16K100, SS 316TI (universal slip-on flange included)							
	K	Without slip-on flange/without mounting bracket (customer mounting equipment)							
	M	With mounting bracket FAU20							
	Y	Special version							
030			**Power supply/communication**						
	H	4 wire, 10,5 to 32VDC / 4-20mA HART							
	G	4 wire, 90 to 253VAC / 4-20mA HART							
	D	2 wire, PROFIBUS PA							
	F	2 wire, FOUNDATION Fieldbus							
	J	2-wire; 4-20mA HART, 5-point linearity protocol							
	K	2-wire; PROFIBUS PA, 5-point linearity protocol							
	L	2-wire; FOUNDATION Fieldbus, 5-point linearity protocol							
	M	4-wire 90-250VAC; 4-20mA HART,5-point linearity protocol							
	N	4-wire 10.5-32VDC;4-20mA HART,5-point linearity protocol							
	Y	Special version							
040				**Display / on-site operation**					
	1	Without LC display							
	2	4-line display VU331, Envelope curve display on site							
	3	Prepared for remote display FHX 40							
	9	Special version							
050					**Housing**				
	A	Aluminium F12 housing coated to IP 68 NEMA 6P							
	9	Special version							
060						**Screw union/entry**			
	2	M20x1.5 screw union							
	3	G 1/2“ entry							
	4	NPT 1/2“ entry							
	5	M12 PROFIBUS-PA plug-in connector							
	6	7/8" FF plug							
	9	Special version							
995							Marking		
	1	Tagging (TAG)							
	2	Bus address							
FMU43 -								Product designation	

2.6 Product structure FMU44

010	Approval
A	Non-hazardous area
1	ATEX II 1/2G EEx ia IIC T6
4	ATEX II 1/2G EEx d (ia) IIC T6
G	ATEX II 3G Ex nA IIC T6
2	ATEX II 1/2 D, Alu blind cover
5	ATEX II 1/3 D
6	ATEX II 3D Ex t IIIC T* °C Dc
S	FM IS Cl.I,II,III Div.1 Gr.A-G, NI Cl.I Div.2, Zone 0,1,2 (in preparation)
T	FM XP Cl.I,II,III Div.1 Gr.A-G, Zone 1,2 (in preparation)
N	CSA General Purpose
U	CSA IS Cl.I,II,III Div.1 Gr.A-G, NI Cl.I Div.2, zone 0,1,2
V	CSA XP Cl.I,II,III Div.1 Gr.A-G
K	TIIS EEx ia IIC T6 (in preparation)
I	NEPSI Ex ia IIC T6 (in preparation)
J	NEPSI Ex d(ia) IIC T6 (in preparation)
E	NEPSI Ex nA II T6 (in preparation)
Q	NEPSI DIP (in preparation)
Y	Special version, to be specified

020	Process connection
A	8" 150lbs FF, 316L, max 2.5bar abs./36psia
E	UNI flange 6"/DN150/150, PP, max 2.5bar abs./ 36psia, suitable for 6" 150lbs / DN150 PN16 / 10K 150
F	UNI flange 6"/DN150/150, PVDF, max 2.5bar abs./36psia, suitable for 6" 150lbs /DN150 PN16 / 10K 150
G	UNI flange 6"/DN150/150, 316L, max 2.5bar abs. 36psia, suitable for 6" 150lbs / DN150 PN16 / 10K 150
H	UNI flange DN200/200, PP, max 2.5bar abs./ 36 psia, suitable for DN200 PN16 / 10K 200
J	UNI flange DN200/200, PVDF, max 2.5bar abs./ 36psia, suitable for DN200 PN16 / 10K 200
K	UNI flange DN200/200, 316L, max 2.5bar abs./ 36psia, suitable for DN200 PN16 / 10K 200
L	8" 150lbs FF, PP, max 2.5bar abs./ 36psia
M	Mounting bracket FAU20
N	8" 150lbs FF, PVDF, max 2.5bar abs./ 36psia
T	UNI flange 4"/DN100/100, PP, max 2.5bar abs./ 36psia, suitable for 4" 150lbs / DN100 PN16 / 10K 100
U	UNI flange 4"/DN100/100, PVDF, max. 2.5bar abs./ 36 psia, suitable for 4" 150lbs / DN100 PN16 / 10K 100
V	UNI flange 4"/DN100/100, 316L, max 2.5bar abs./ 36psia, suitable for 4" 150lbs / DN100 PN16 / 10K 100
Y	Special version, to be specified

030	Power supply; Output
B	2-wire; 4-20mA HART
D	2-wire; PROFIBUS PA
F	2-wire; FOUNDATION Fieldbus
G	4-wire 90-250VAC; 4-20mA HART
H	4-wire 10.5-32VDC; 4-20mA HART
J	2-wire; 4-20mA HART, 5-point linearity protocol
K	2-wire; PROFIBUS PA, 5-point linearity protocol
L	2-wire; FOUNDATION Fieldbus, 5-point linearity protocol
M	4-wire 90-250VAC; 4-20mA HART,5-point linearity protocol
N	4-wire 10.5-32VDC;4-20mA HART,5-point linearity protocol
Y	Special version, to be specified

040	Operation
1	w/o display, via communication
2	4-line display VU331, Envelope curve display on site
3	Prepared for FHX40, Remote display (accessory)
9	Special version, to be specified

050		**Housing**
	A	F12 Alu, coated IP68 NEMA6P
	C	T12 Alu, coated IP68 NEMA6P, Separate conn. compartment
	D	T12 Alu, coated IP68 NEMA6P + OVP, Sep. conn. compartment, OVP = overvoltage protection
	9	Special version, to be specified
060		**Cable entry**
	2	Gland M20 (EEx d > thread M20)
	3	Thread G1/2
	4	Thread NPT 1/2
	5	Plug M12
	6	Plug 7/8“
	9	Special version, to be specified
070		**Process Sealing Sensor/ Flange**
	2	Viton
	3	EPDM
	9	Special version, to be specified
080		**Additional option**
	A	Basic version
	Y	Special version, to be specified
995		Marking
	1	Tagging (TAG)
	2	Bus address
FMU44 -		complete product designation

2.7 Scope of delivery

2.7.1 Instrument and accessories

- Instrument according to the version ordered
- Accessories (→ 🖹 58)
- Brief operating instructions KA01062F/00/EN for quick commissioning
- Brief operating instructions KA00183F/00/A2 (basic setup/troubleshooting), housed in the instrument)
- For certified instrument versions: Safety Instructions, Control- or Installation drawings
- For FMU40 *R**** and FMU41 *R****: counter nut (PC)
- For FMU40/41: sealing ring (EPDM)
- For gland M20x1.5:
  – 1 cable gland for 2-wire instruments
  – 2 cable glands for 4-wire instruments
  The cable glands are mounted on delivery.
- Endress+Hauser operating program on the enclosed CD-ROM
- CD-ROM with further documentation, e. g.
  - Technical Information
  - Operating Instructions
  - Description of Intrument Functions



Note!
Additional safety instructions (XA, ZE, ZD) are supplied with certified device versions. Refer to the nameplate for the names of the safety instructions that apply to your device version.

2.8 Certificates and approvals

CE mark, declaration of conformity
The device is designed to meet state-of-the-art safety requirements, has been tested and left the factory in a condition in which it is safe to operate. The device complies with the applicable standards and regulations as listed in the EC declaration of conformity and thus complies with the statutory requirements of the EC directives. Endress+Hauser confirms the successful testing of the device by affixing to it the CE mark.

2.9 Registered trademarks

HART®
Registered trademark of HART Communication Foundation, Austin, USA

FieldCare®
Trademark of Endress+Hauser Process Solutions AG.

ToF®
Registered trademark of the company Endress+Hauser GmbH+Co. KG, Maulburg, Germany

PulseMaster®
Registered trademark of the company Endress+Hauser GmbH+Co. KG, Maulburg, Germany

3 Installation

3.1 Design; dimensions

3.1.1 FMU40, FMU41

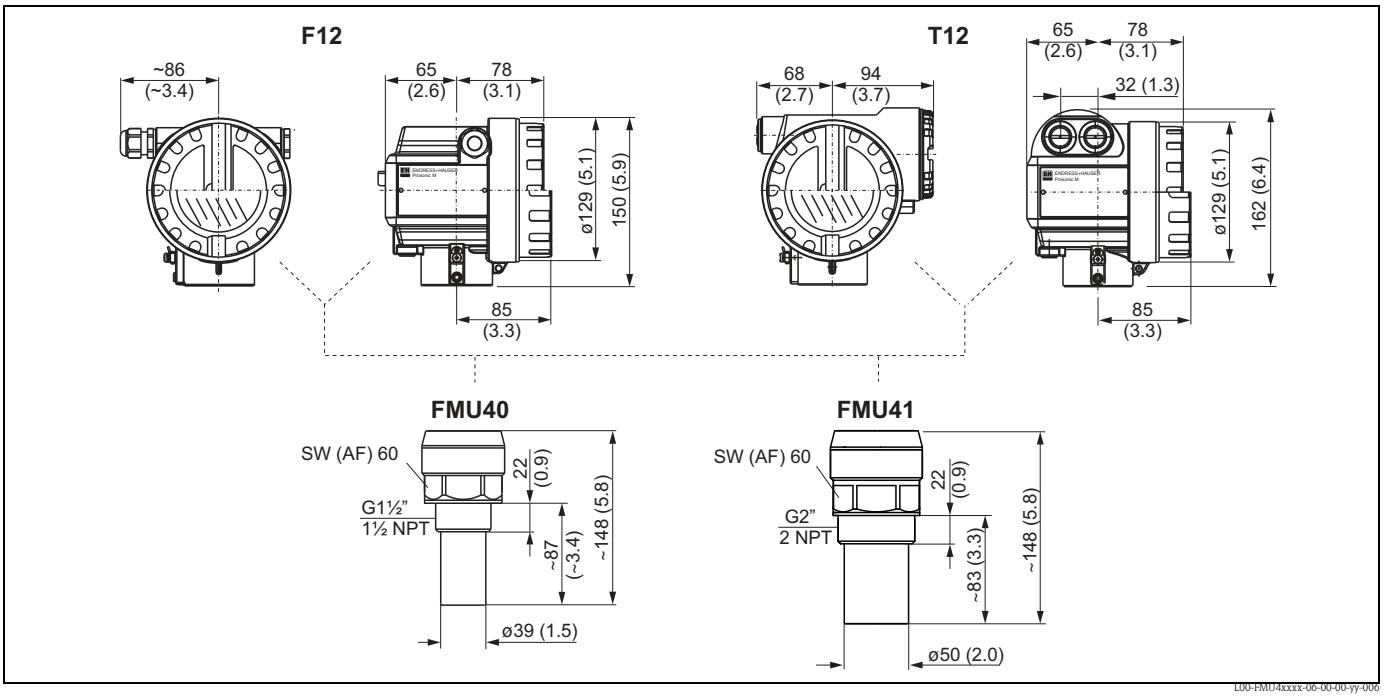

Dimensions in mm (in)

3.1.2 FMU42, FMU44 with slip-on flange

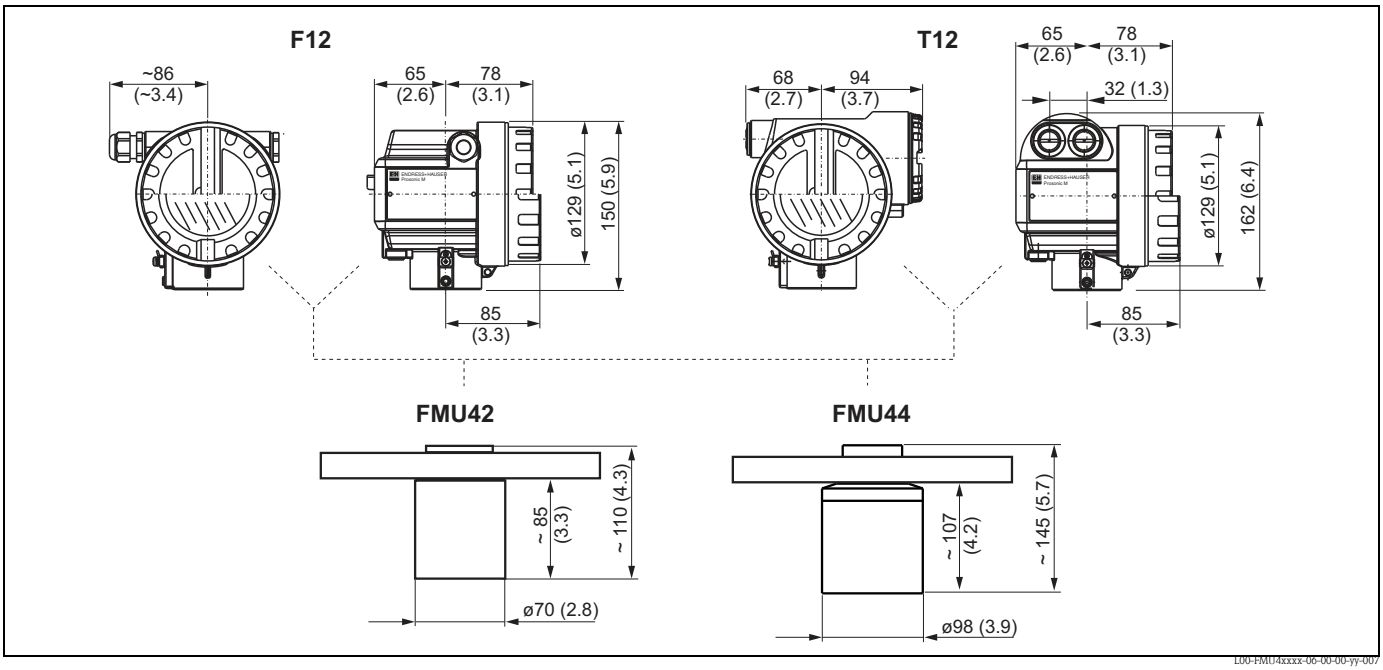

Dimensions in mm (in)

3.1.3 FMU42, FMU44 with mounting bracket

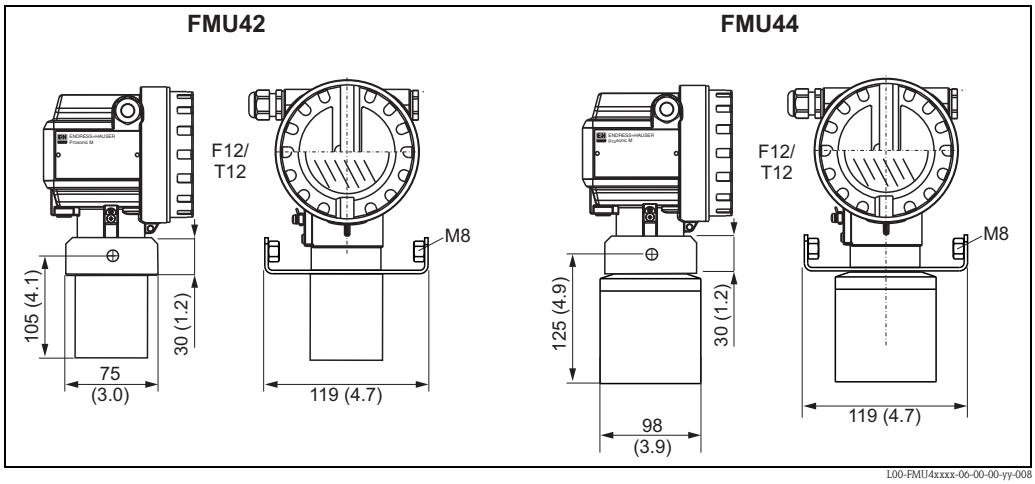

Dimensions in mm (in)

3.1.4 FMU43

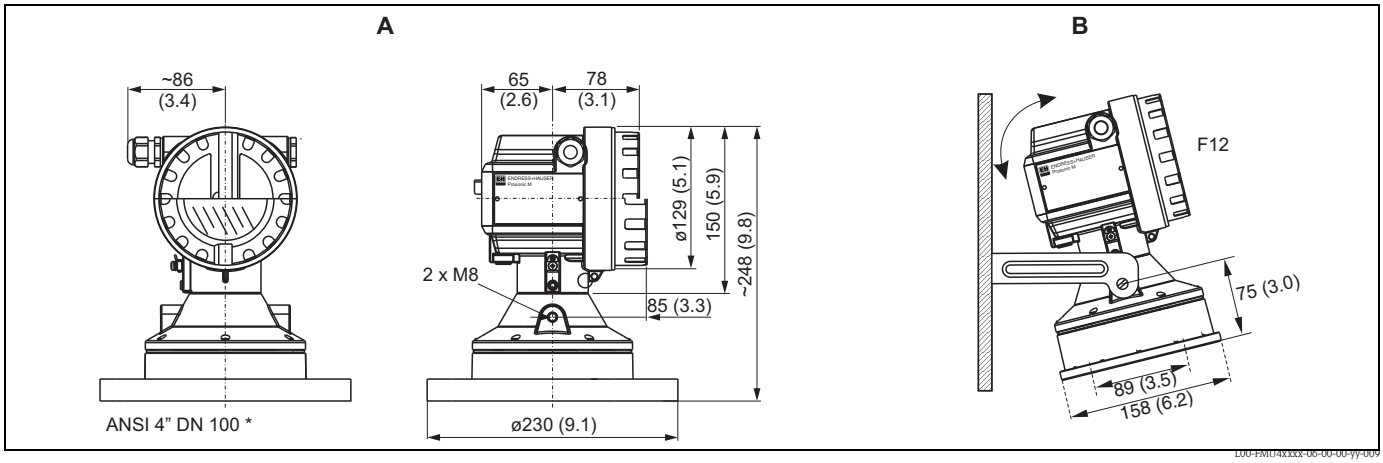

Dimensions in mm (in)
A *With slip-on flange* ***B*** *With mounting bracket*

3.1.5 Mounting bracket for FMU42, FMU43 and FMU44

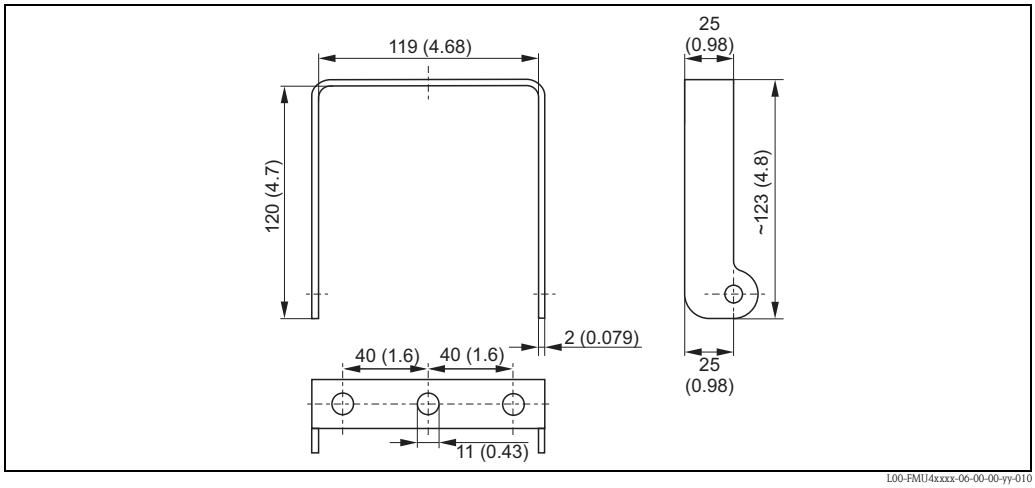

Dimensions in mm (in)

3.1.6 Flanges for FMU42 and FMU44

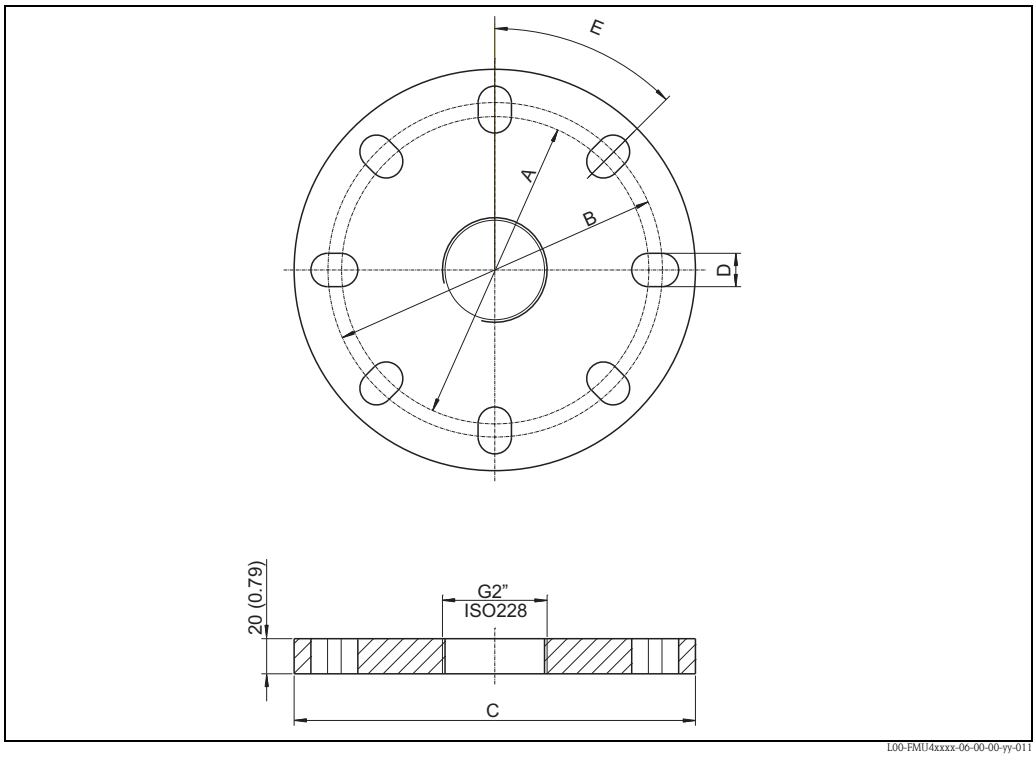

Dimensions in mm (in)

suitable for	A	B	C	D	E	number of boreholes
3" 150 lbs / DN80 PN16 / 10 K 80	150 mm (5.91")	160 mm (6.30")	200 mm (7.87")	19 mm (0.75")	45°	8
4" 150 lbs / DN100 PN16 / 10 K 100	175 mm (6.90")	190.5 mm (7.50")	228.6 mm (9.00")	19 mm (0.75")	45°	8
6" 150 lbs / DN150 PN16 / 10 K 150	240 mm (9.45")	241.3 mm (9.50")	285 mm (11.22")	23 mm (0.91")	45°	8
8" 150 lbs	298.5 mm (11.75")	298.5 mm (11.75")	342.9 mm (13.50")	22. 5 mm (0.89")	45°	8
DN200 PN16 / 10 K 200	290 mm (11.42")	295 mm (11.61")	340 mm (13.39")	23 mm (0.91")	30°	12

3.2 Installation variants

3.2.1 Installation variants FMU40, FMU41

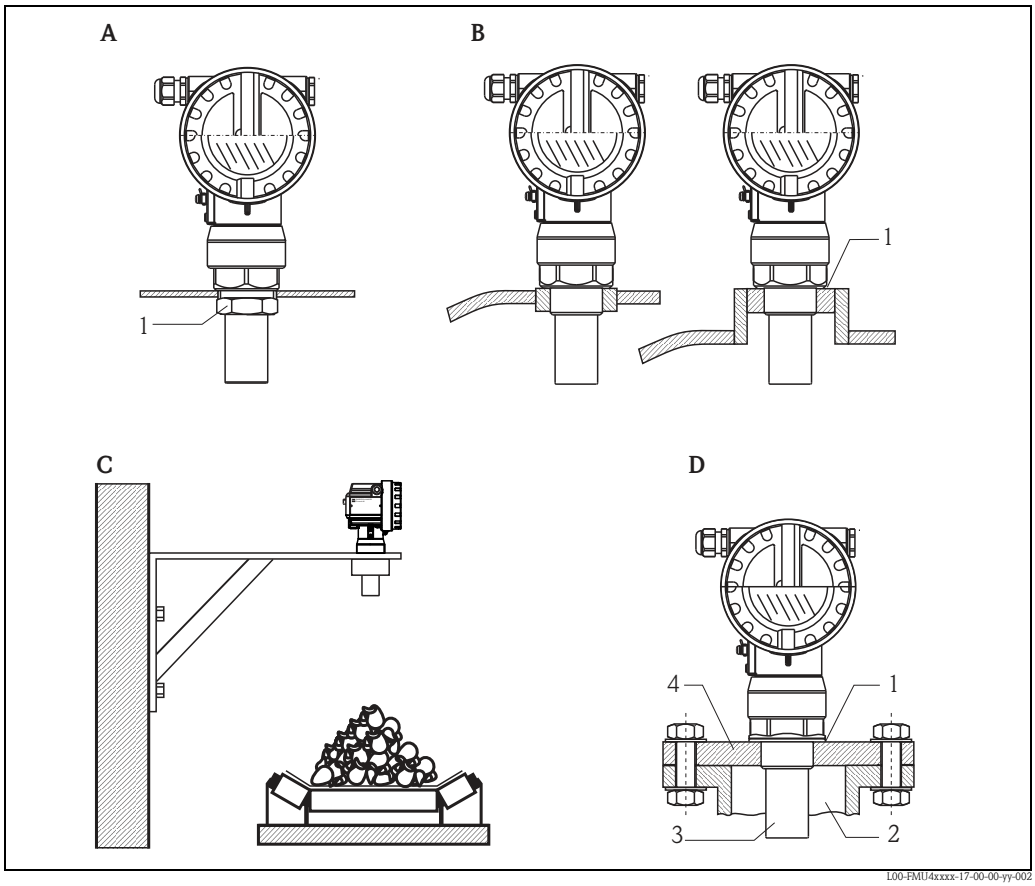

A Installation with counter nut
1 Counter nut (PC) supplied for G1½ and G2 instruments
B Installation with sleeve
1 Sealing ring (EPDM) supplied
C Installation with installation bracket
D Installation with screw in flange
1 Sealing ring (EPDM) supplied
2 Nozzle
3 Sensor
4 Screw in flange

For installation bracket or adapter flange → 📄 58, "Accessories".

3.2.2 Installation variants FMU42, FMU44

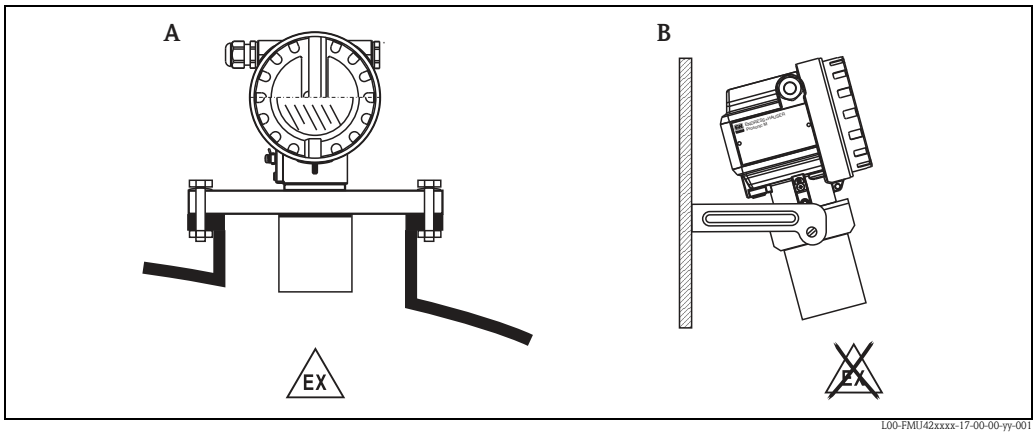

A Installation with universal flange, (Ex-hazardous, e.g. Zone 20)
B Installation with mounting bracket, (Non-Ex-hazardous, Zone 20)

3.2.3 Installation variants FMU43

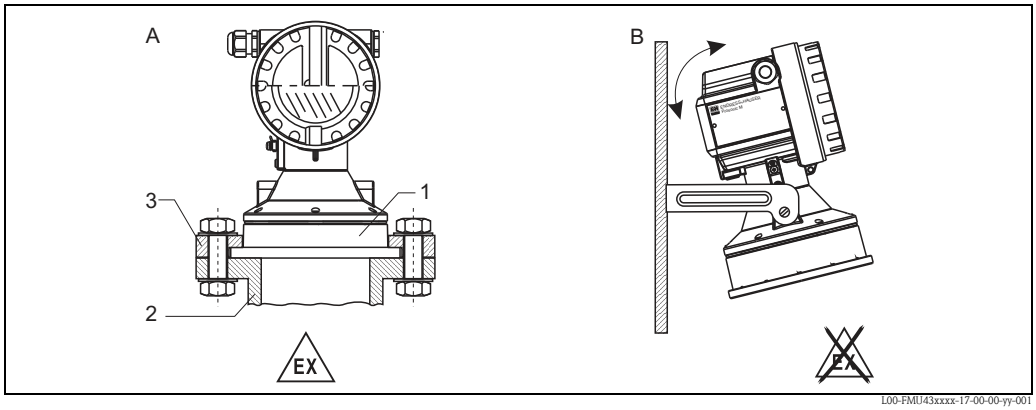

A Installation with universal slip-on flange (option)
1 Sensor
2 Nozzle
3 Slip-on flange
B Installation with mounting bracket

3.3 Installation conditions

3.3.1 Installation conditions for level measurements

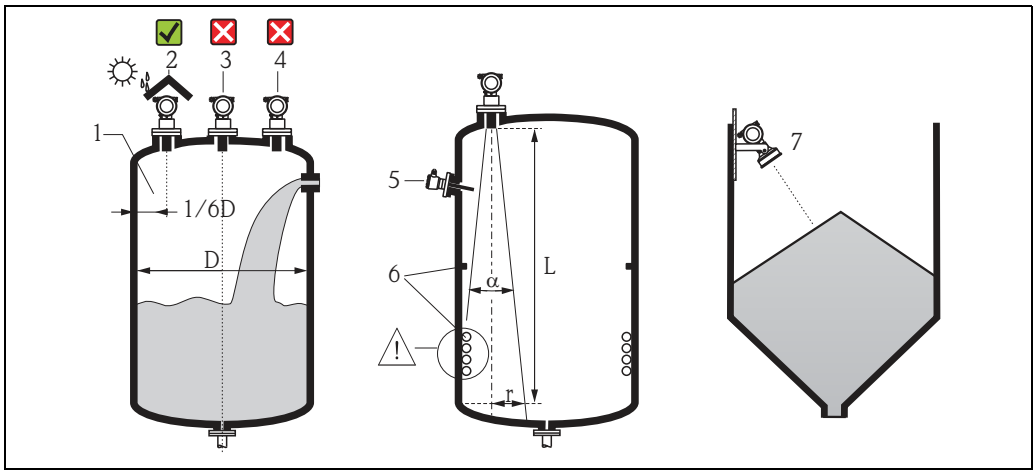

- Do not install the sensor in the middle of the tank (3). We recommend leaving a distance between the sensor and the tank wall (1) measuring 1/6 of the tank diameter.
- Use a protective cover, in order to protect the device from direct sun or rain (2).
- Avoid measurements through the filling curtain (4).
- Make sure that equipment (5) such as limit switches, temperature sensors, etc. are not located within the emitting angle α. In particular, symmetrical equipment (6) such as heating coils, baffles etc. can influence measurement.
- Align the sensor so that it is vertical to the product surface (7).
- Never install two ultrasonic measuring devices in a tank, as the two signals may affect each other.
- To estimate the detection range, use the 3 dB emitting angle α.

Sensor	α	L_{max}	r_{max}
FMU40	11°	5 m (16 ft)	0.48 m (1.6 ft)
FMU41	11°	8 m (26 ft)	0.77 m (2.5 ft)
FMU42	9°	10 m (33 ft)	0.79 m (2.6 ft)
FMU43	6°	15 m (49 ft)	0.79 m (2.6 ft)
FMU44	11 °	20 m (66 ft)	1.93 m (6.3 ft)

3.3.2 Installation in narrow shafts

In narrow shafts with strong interference echoes, we recommend using an ultrasound guide pipe (e.g. PE or PVC wastewater pipe) with a minimum diameter of 100 mm (3.94 in). Make sure that the pipe is not soiled by accumulated dirt. If necessary, clean the pipe at regular intervals.

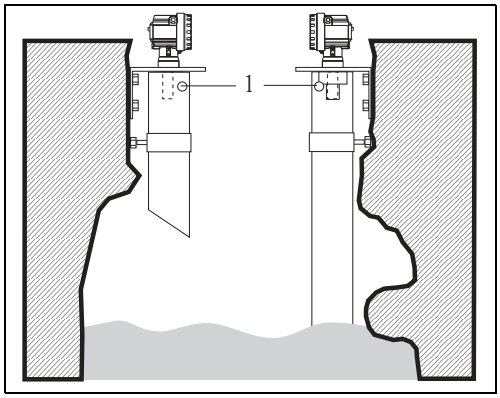

1 Venting hole

3.3.3 Installation conditions for flow measurements

- Install the Prosonic M at the inflow side, as close above the maximum water level H_{max} as possible (take into account the blocking distance BD).
- Position the Prosonic M in the middle of the channel or weir.
- Align the sensor membrane parallel to the water surface.
- Keep to the installation distance of the channel or weir.
- You can enter the "Flow to Level" linearisation curve ("Q/h curve") using the operating program FieldCare or manually via the on-site display.

Example: Khafagi-Venturi flume

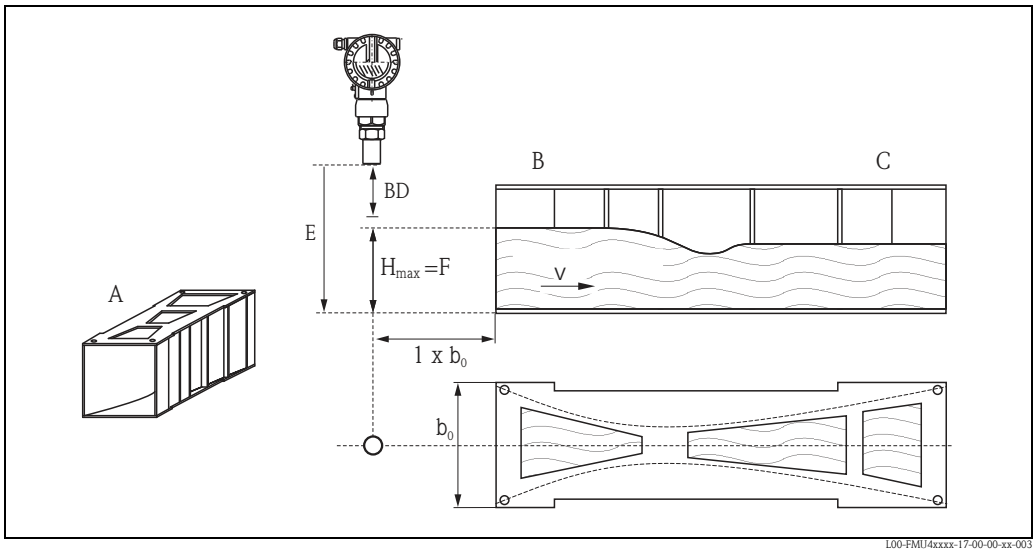

A Khafagi-Venturi flume
B Inflow
C Outflow
BD Blocking distance
E Empty calibration
F Full calibration
V Direction of flow

Example: Triangular weir

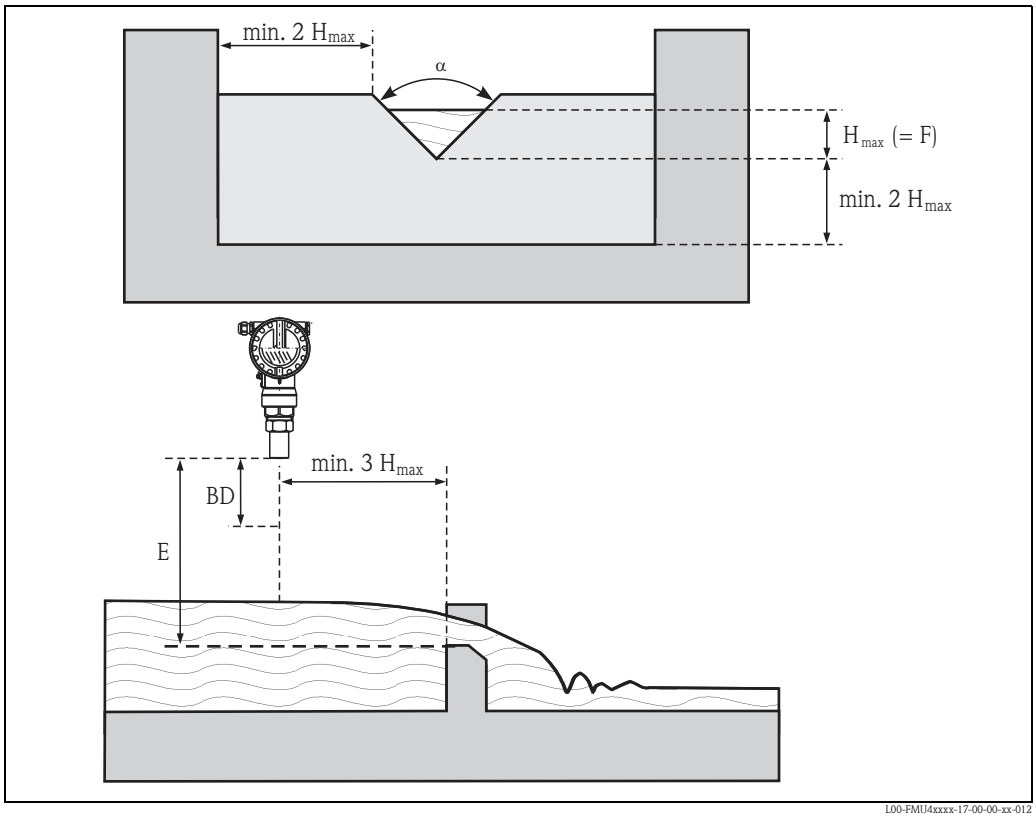

BD Blocking distance
E Empty calibration
F Full calibration

3.4 Measuring range

3.4.1 Blocking distance, Nozzle mounting

Install the Prosonic M at a height so that the blocking distance BD is not undershot, even at maximum fill level. Use a pipe nozzle if you cannot maintain the blocking distance in any other way. The interior of the nozzle must be smooth and may not contain any edges or welded joints. In particular, there should be no burr on the inside of the tank side nozzle end. Note the specified limits for nozzle diameter and length. To minimise disturbing factors, we recommend an angled socket edge (ideally 45°).

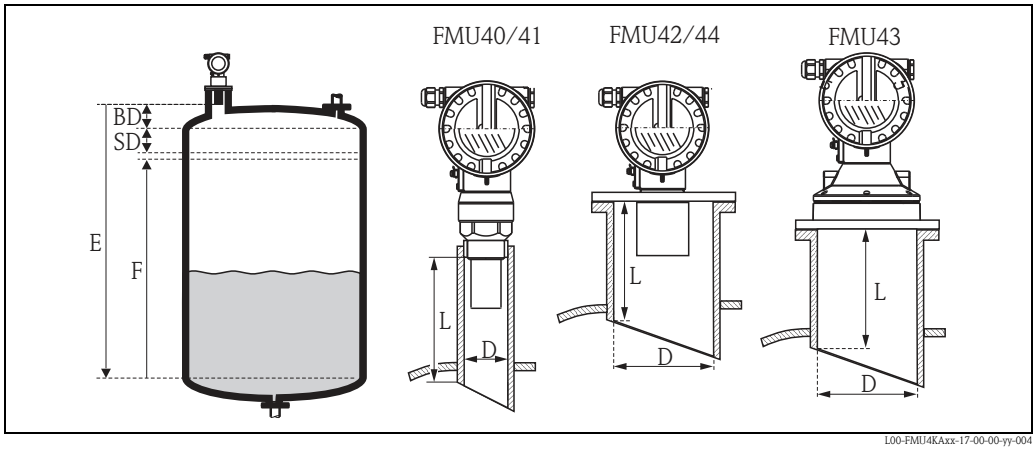

BD Blocking distance
SD Safety distance
E Empty calibration
F Full calibration (span)
D Nozzle diameter
L Nozzle length

	Maximum nozzle length [mm (in)]				
Nozzle diameter	**FMU40**	**FMU41**	**FMU42**	**FMU43**	**FMU44**
DN50/2"	80 (3.15)				
DN80/3"	240 (9.45)	240 (9.45)	250 (9.84)		
DN100/4"	300 (11.8)	300 (11.8)	300 (11.8)	300 (11.8)	
DN150/6"	400 (15.7)	400 (15.7)	400 (15.7)	300 (11.8)	400 (15.7)
DN200/8"	400 (15.7)	400 (15.7)	400 (15.7)	300 (11.8)	400 (15.7)
DN250/10"	400 (15.7)	400 (15.7)	400 (15.7)	300 (11.8)	400 (15.7)
DN300/12"	400 (15.7)	400 (15.7)	400 (15.7)	300 (11.8)	400 (15.7)
Sensor characteristics					
Emitting angle α	11°	11°	9°	6°	11°
Blocking distance [m (ft)]	0.25 (0.8)	0.35 (1.1)	0.4 (1.3)	0.6 (2.0)	0.5 (1.6)
Max. range [m (ft)] in liquids	5 (16.0)	8 (26.0)	10 (33.0)	15 (49.0)	20 (66.0)
Max. range [m (ft)] in solids	2 (6.6)	3.5 (11.0)	5 (16.0)	7 (23.0)	10 (33.0)

Caution!
If the blocking distance is undershot, it may cause device malfunction.

3.4.2 Safety distance

If the level rises to the safety distance SD, the device switches to warning or alarm status.
The size of SD can be set freely in the **"Safety distance" (015)** function.The **"in safety distance" (016)** function defines how the device reacts if the level enters the safety distance.

There are three options:
- **Warning**: The device outputs an error message but continues measurement.
- **Alarm**: The device outputs an error message. The output signal assumes the value defined in the **"Output on alarm" (011)** function (MAX, MIN, user-specific value or holds the last value). As soon as the level drops below the safety distance, the device recommences measurement.
- **Self holding**: The device reacts in the same way as for an alarm. However, the alarm condition continues after the level drops below the safety distance. The device only recommences measurement when you cancel the alarm using the **"Ackn. alarm" (017)** function.

3.4.3 Range

The sensor range is dependent on the measuring conditions. Refer to Technical Information TI00365F/00/EN for an estimation. The maximum range is shown in the above diagram (valid for good conditions).

Sensor	Maximum range
FMU40	5 m (16 ft)
FMU41	8 m (26 ft)
FMU42	10 m (33 ft)
FMU43	15 m (49 ft)
FMU44	20 m (66 ft)

3.5 Installation hint for FMU40, FMU41

☝ Caution!
Use only the screw-in piece to screw in the Prosonic M.

Screw the Prosonic M at the screw-in piece using an 60 AF spanner.
Maximum torque: 20 Nm (14.75 lbf ft).

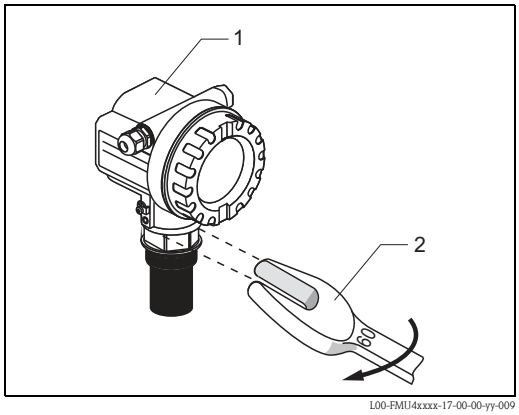

1 Housing F12 or T12
2 60 AF

3.6 Turn housing

After mounting, the housing can be turned 350° in order to simplify access to the display and the terminal compartment. Proceed as follows to turn the housing to the required position:
- Undo the fixing screws (allen key 4 mm (0.16 in))
- Turn the housing in the required direction
- Tighten up the fixing screws. Maximum torque 0.5 Nm (0.36 lbf ft).
- Loctite can be used for securing the screw.

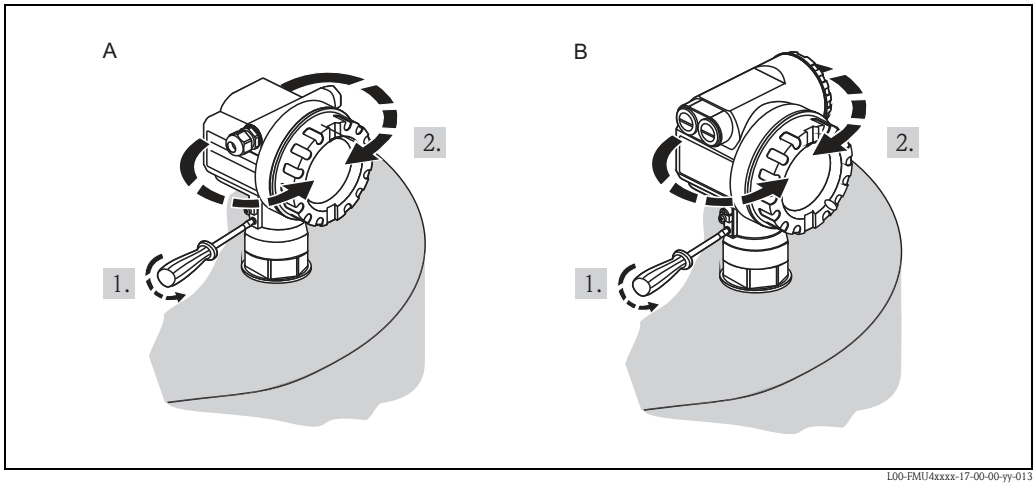

A *Housing F12*
B *Housing T12*

3.7 Installation check

After installing the device, carry out the following checks:
- Is the device damaged (visual inspection)?
- Does the device correspond to the measuring point specifications for process temperature, process pressure, ambient temperature, measuring range etc.
- If available: Are the measuring point number and labelling correct (visual inspection)?
- Is the measuring device sufficiently protected against precipitation and direct sunlight?
- Are the cable glands tightened correctly?
- After aligning the housing, check the process seal at the nozzle or flange.

4 Wiring

4.1 Electrical connection

Caution!
Before connection please note the following:
- The power supply must be identical to the data on the nameplate.
- Switch off power supply before connecting up the instrument.
- Connect equipotential bonding to transmitter ground terminal before connecting up the instrument (→ 30, "Potential matching")

Warning!
When you use the measuring system in hazardous areas, make sure to comply with national standards and the specifications in the safety instructions (XA's). Make sure you use the specified cable gland.

4.1.1 Wiring in the housing F12

1. Unscrew housing cover (1).
2. Remove display (2) if fitted.
3. Remove cover plate (3) from terminal compartment.
4. Pull out terminal module (4) slightly using pulling loop.
5. Insert cable (5) through gland (6).

   Caution!
   If possible, insert the cable from above and let a draining loop in order to avoid intrusion of humidity.
6. Connect cable screen to the grounding terminal (7) within the terminal compartment.
7. Make connection according to terminal assignment (see below).
8. Re-insert terminal module (4).
9. Tighten cable gland (6).
10. Tighten screws on cover plate (3).
11. Insert display (2) if fitted.
12. Screw on housing cover (1).
13. Switch on power supply.

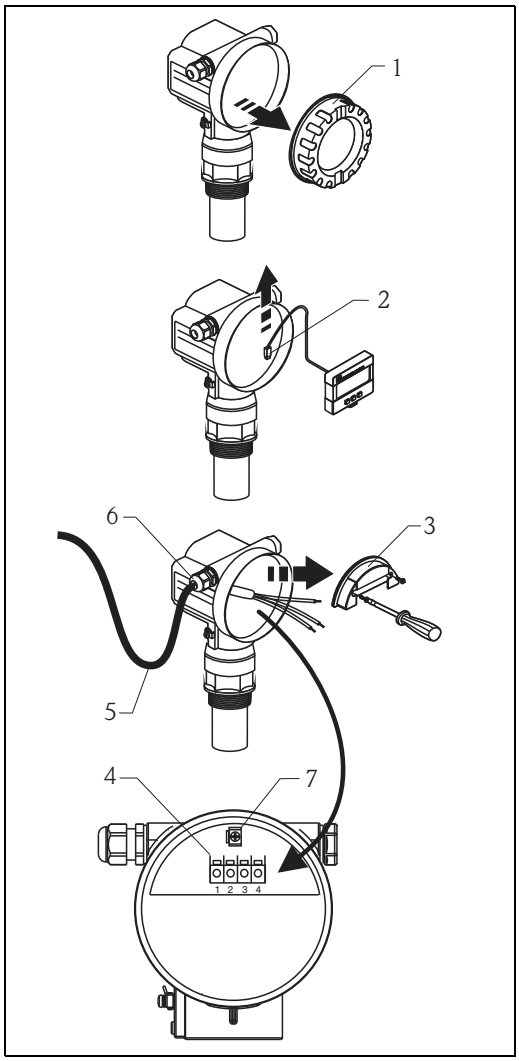

L00-FMU4xxxx-04-00-00-yy-008

4.1.2 Wiring in the housing T12

1. Unscrew the cover (1) of the separate connection room.
2. Insert cable (2) through gland (3).

   ☝ Caution!
   If possible, insert the cable from above and let a draining loop in order to avoid intrusion of humidity.
3. Connect cable screen to the grounding terminal (4) within the connection room.
4. Make connection according to the terminal assignment (see below).
5. Tighten cable gland (3).
6. Screw on housing cover (1).
7. Switch on power supply.

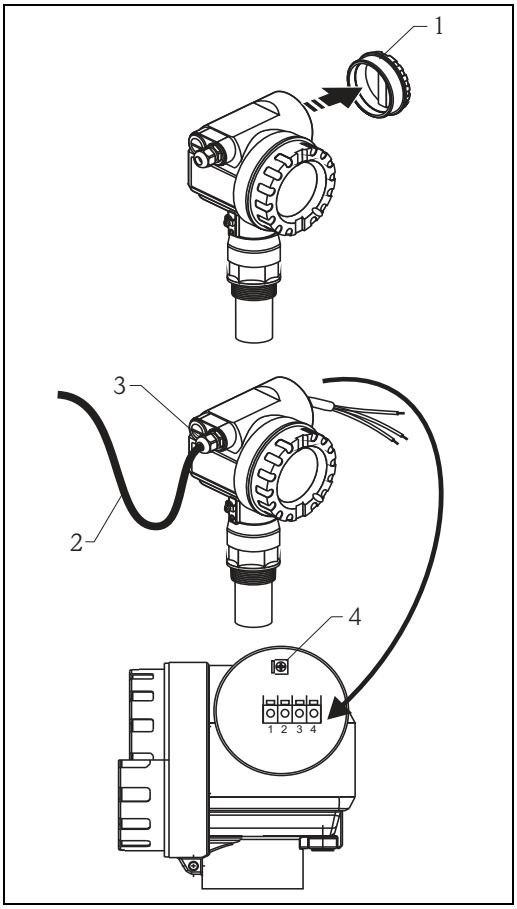

L00-FMU4xxxx-04-00-00-yy-009

4.2 Terminal assignment

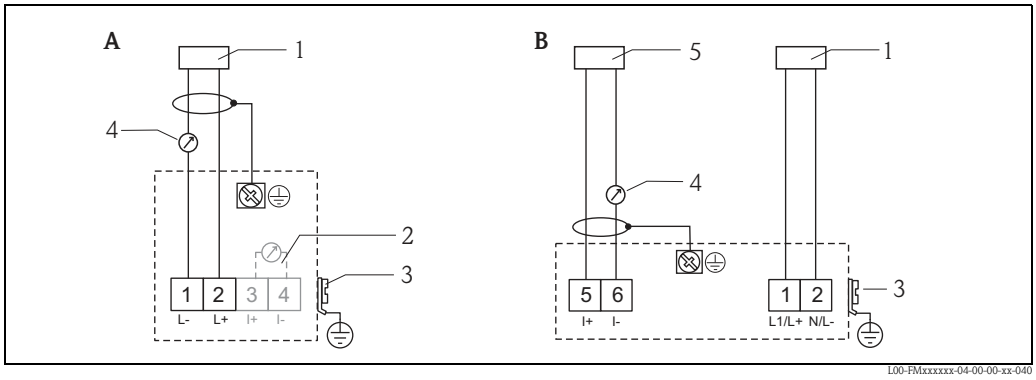

A Loop-powered version
B 4-wire version (active)
1 Power
2 Test clamp for testing of the signal current
3 Plant ground
4 4...20 mA HART
5 Display unit, recorder, PCS

Note!
- When operating via a handheld terminal or via a PC with an operating program, a minimum communication resistance of 250 Ω must be taken into account. Observe the max. load → 30.
- The connecting options for Commubox FXA195 or Field Xpert SFX100, see Technical Information TI00404F or BA00060S/04/EN.
- More Information of the complete measuring system → 34.

4.3 Supply voltage

4.3.1 HART, 2-wire

The following values are the voltages across the terminals directly at the instrument:

Version		Current consumption	Terminal voltage minimum	Terminal voltage maximum
2-wire HART	Standard	4 mA	14 V	36 V
		20 mA	8 V	36 V
	Ex ia	4 mA	14 V	30 V
		20 mA	8 V	30 V
	Ex d	4 mA	14 V	30 V
		20 mA	11 V	30 V
Fixed current, adjustable, e.g. for solar power operation (measured value via HART)	Standard	11 mA	10 V	36 V
	Ex ia	11 mA	10 V	30 V
Fixed current for HART multidrop mode	Standard	4 mA[1)]	14 V	36 V
	Ex ia	4 mA[1]	14 V	30 V

1) Start-up current 11 mA

4.3.2 HART, 4-wire, active

Version	Voltage	max. load
DC	10.5 to 32 V	600 Ω
AC 50/60 Hz	90 to 253 V	600 Ω

Caution!
When using the public powers supply, install an easy accessible power switch in the proximity of the instrument. Mark the power switch as a disconnector for the instrument (IEC/EN 61010).

4.4 Potential matching

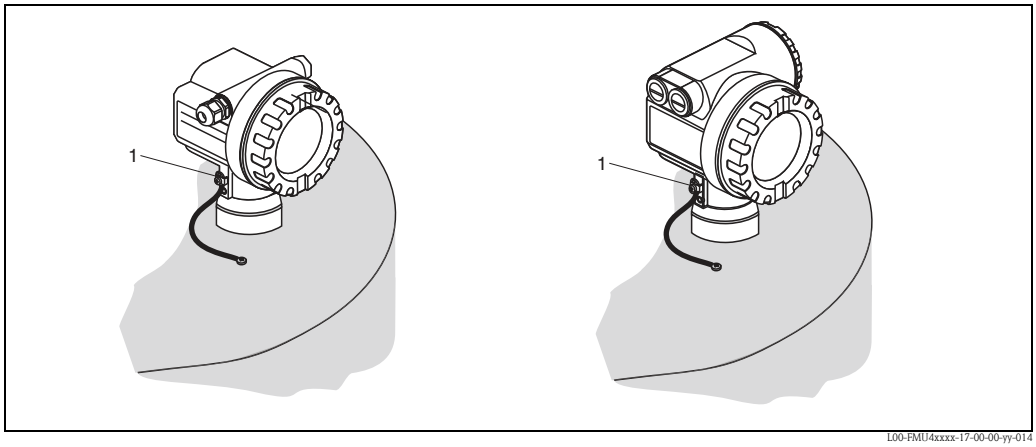

1 External ground terminal of the transmitter

Connect the equipotential bonding to the external ground terminal of the transmitter.

Caution!
In Ex applications, the instrument must only be grounded on the sensor side. Further safety instructions are given in the separate documentation for applications in explosion hazardous areas.

Note!
Since the housing is isolated from the tank by the plastic sensor, interference signals may occur if the potential matchin gline is not prolerly connected.
For optimum electromagnetic compatibility the potential matching line should be as short as possible and at least 2,5 mm^2 (14 AWG) in cross-section.
If increased electromagnetic interference is to be expected due to the installation conditions, we recommend usage of a ground strap.

4.5 Checking the connection

After wiring the device, carry out the following checks:
- Are the terminals correctly assigned?
- Is the cable gland tight?
- Is the housing cover fully screwed on?
- If power supply available: Does a display appear on the display module?

5 Operation

5.1 Display and operating elements

5.1.1 On-site display VU331

The LCD module VU331 for display and operation is located beneath the housing cover. The measured value is legible through the glass in the cover. Open the cover to operate the device.

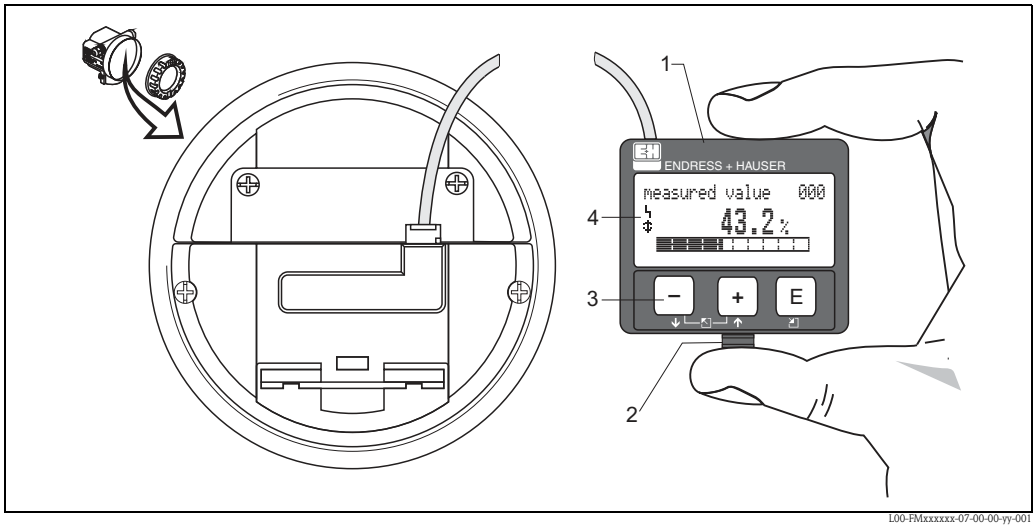

L00-FMxxxxxx-07-00-00-yy-001

1 LCD liquid crystal display
2 Snap fit
3 Keys
4 Symbols

5.1.2 Display appearance

measured value display

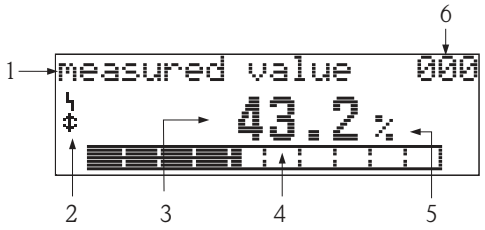

1. label
2. symbol
3. value
4. bargraph
5. unit
6. position in menu

group selection

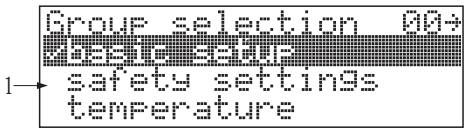

1. selection list

Function with free parameter

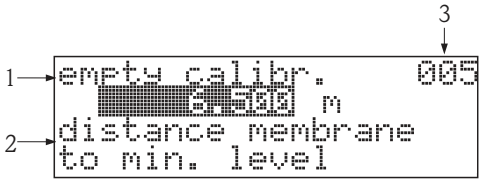

1. label
2. help texts
3. position in menu

envelope curve



1. envelope curve

In the measured value display, the bargraph corresponds to the output.
The bargraph is segmented in 10 bars. Each completely filled bar represents a change of 10% of the adjusted span.

5.1.3 Display symbols

The following table describes the symbols that appear on the liquid crystal display:

Sybmol	Meaning
	ALARM_SYMBOL This alarm symbol appears when the instrument is in an alarm state. If the symbol flashes, this indicates a warning.
	LOCK_SYMBOL This lock symbol appears when the instrument is locked,i.e. if no input is possible.
	COM_SYMBOL This communication symbol appears when a data transmission via e.g. HART, PROFIBUS PA or FOUNDATION Fieldbus is in progress.

5.1.4 Function of the keys

Key(s)	Meaning
+ or ↑	Navigate upwards in the selection list Edit numeric value within a function
− or ↓	Navigate downwards in the selection list Edit numeric value within a function
Esc − + or ←	Navigate to the left within a function group
E	Navigate to the right within a function group, confirmation.
+ and E or − and E	Contrast settings of the LCD
+ and − and E	Hardware lock / unlock After a hardware lock, an operation of the instrument via display or communication is not possible! The hardware can only be unlocked via the display. An unlock parameter must be entered to do so.

5.2 Function codes

For easy orientation within the function menus, for each function a position is shown on the display.

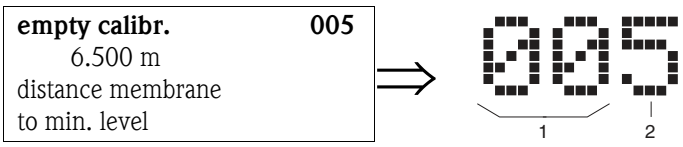

1 Function group
2 Function

The first two digits identify the function group:

- **basic setup 00**
- **safety settings 01**
- **linearisation 04**

. . .

The third digit numbers the individual functions within the function group:

- **basic setup 00** →
  - **tank shape 002**
  - **medium property 003**
  - **process cond. 004**

  . . .

Hereafter the position is always given in brackets (e.g. "**tank shape**" **(002)**) after the described function.

5.3 Operating options

5.3.1 4 to 20 mA output with HART protocol

The complete measuring system consists of:

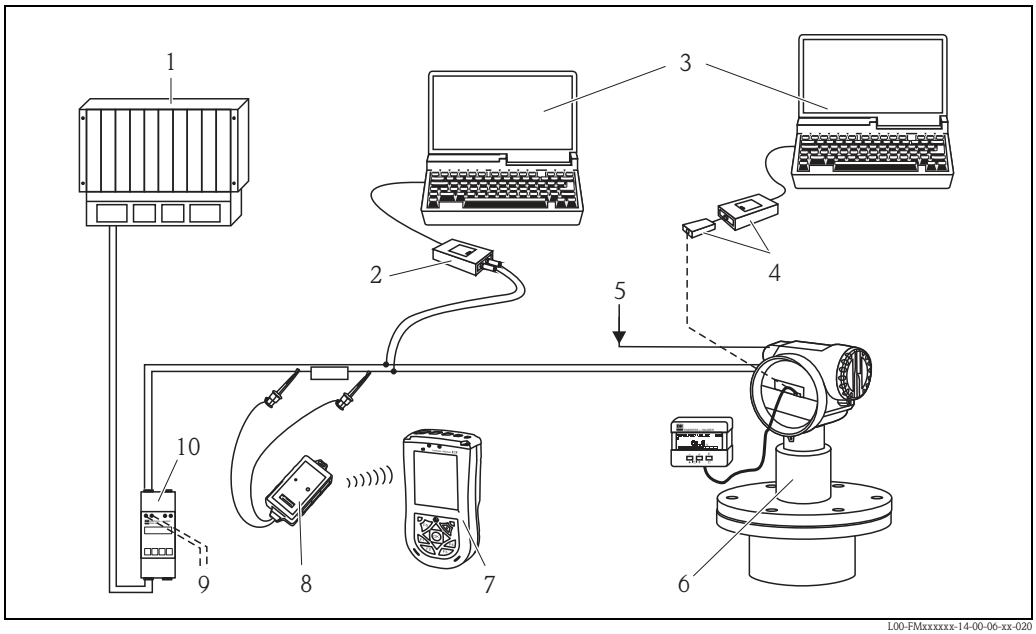

1 PLC (programmable logic controller)
2 Commubox FXA191 (RS232) or FXA195 (USB)
3 Computer with operating tool (e.g. FieldCare)
4 Commubox FXA291 with ToF Adapter FXA291
5 Power supply (for 4-wire)
6 Prosonic with display and operating modul
7 Field Xpert SFX100
8 VIATOR Bluetooth-Modem modem with connection cable
9 Connection for Commubox FXA191, FXA195 or Field Xpert SFX100
10 Transmitter supply unit RMA422 or RN221N (communication resistor included)

If the HART communication resistor is not built into the supply unit, it is necessary to insert a communication resistor of 250 Ω into the 2-wire line.

5.4 Operation using the on-site display VU331

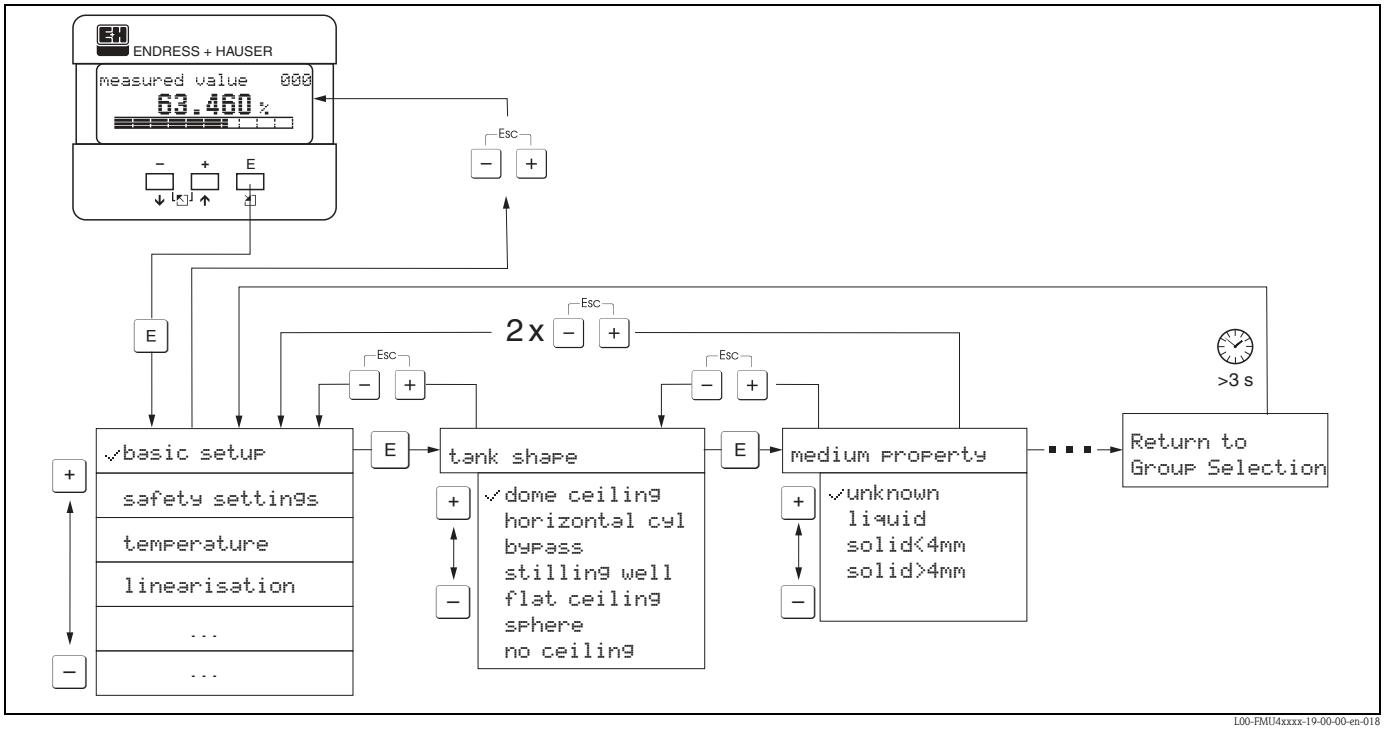

1. Change from Measured Value Display to **Group Selection** by pressing E.
2. Press − or + to select the required **Function Group** and confirm by pressing E.
   The active selection is marked by a ✓ in front of the menu text.
3. Activate Edit mode with + or − .

   Selection menus

   a. Select the required **Parameter** in selected **function** with − oder + .

   b. E confirms selection; ✓appears in front of the selected parameter.

   c. E confirms the edited value; system quits edit mode.

   d. + and − (= ±) interrupts selection; system quits edit mode.

   Typing in numerals and text

   a. Press + or − to edit the first character of the **numeral / text**.

   b. E positions the cursor at the next character; continue with a. until you have completed your input.

   c. If a ↵ symbol appears at the cursor, press E to accept the value entered; system quits edit mode.

   d. If a ← symbol appears at the cursor, press E to return to the previous character (e.g. for correction of entries).

   e. + and − (= ±) interrupts selection; system quits edit mode.
4. Press E to select the next **function**.
5. Press + and − (= ±) once; return to previous **function**.
   Press + and − (= ±) twice; return to **Group Selection**.
6. Press + and − (= ±) to return to **Measured value display**.

5.5 HART communication

Apart from local operation, you can also parameterise the measuring instrument and view measured values by means of a HART protocol. There are two options available for operation:
- Operation via the universal handheld operating unit Field Xpert SFX100.
- Operation via the Personal Computer (PC) using the operating program FieldCare.



Note!
The device can also be operated locally using the keys. If operation is prevented by the keys being locked locally, parameter entry via communication is not possible either.

5.5.1 Operation via Field Xpert SFX100

Compact, flexible and robust industry handheld terminal for remote parametrization and measured value inspection via the HART current output or FOUNDATION Fieldbus. For details refer to Operating Instructions BA00060S/04/EN.

5.5.2 FieldCare operating program

FieldCare is an Endress+Hauser asset management tool based on FDT technology. With FieldCare, you can configure all Endress+Hauser devices as well as devices from other manufacturers that support the FDT standard. Hardware and software requirements you can find on the internet: www.endress.com → select your country → search: FieldCare → FieldCare → Technical Data.

FieldCare supports the following functions:
- Configuration of transmitters in online operation
- Singal analysis via envelope curve
- Tank linearisation
- Loading and saving device data (upload/download)
- Documentation of the measuring point

Connection options:
- HART via Commubox FXA195 and the USB port on a computer
- Commubox FXA291 with ToF Adapter FXA291 (USB) via service interface

Menu-guided commissioning:

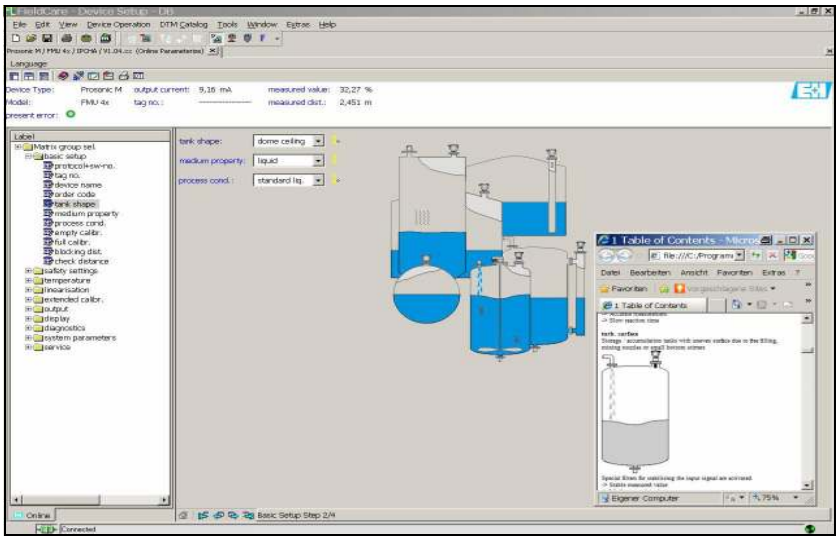

L00-FMU4xxxx-19-00-00-en-021

- You can find the function groups and functions of the device in the **navigation bar**.
- You can find the input fields for the parameters in the **main window**.
- If you click on a parameter name, the **Help pages** open with precise explanations of the required input.

Signal analysis via envelope curve:

The FieldCare offers easy analysis of the envelope curve via the "Envelope" menu:

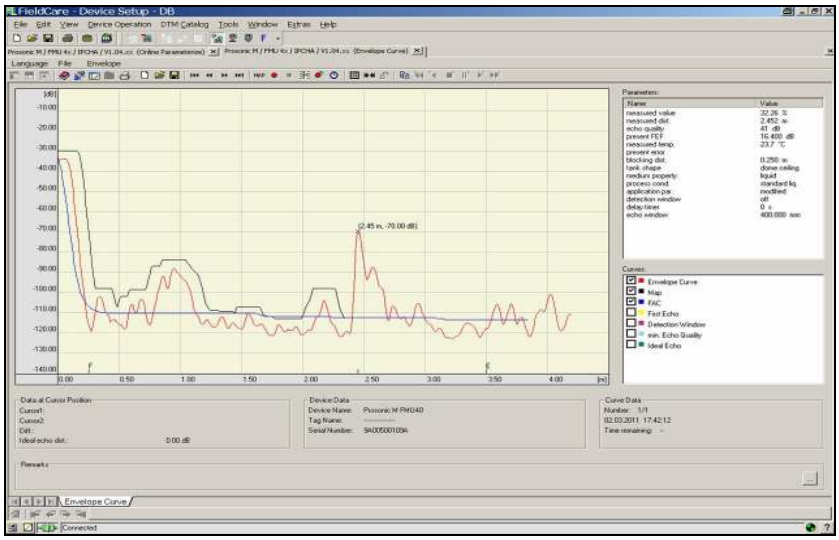

L00-FMU4xxxx-19-00-00-en-022

5.6 Lock/unlock configuration

5.6.1 Software security locking

Enter a number ≠100 in the **"unlock parameter" (0A4)** function in the **"diagnostics" (0A)** function group.
The symbol appears on the display. Inputs are no longer possible.

If you try to change a parameter, the device jumps to the **"unlock parameter" (0A4)** function.
Enter "100"
Now change the parameters.

5.6.2 Hardware security locking

Press −, + and E simultaneously.
Inputs are no longer possible.

If you try to change a parameter, the following appears:

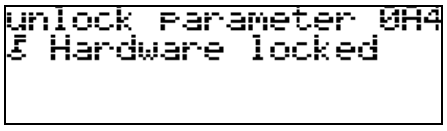

L00-fmrxf0a4-20-00-00-de-001

Press −, + and E simultaneously. The **"unlock parameter" (0A4)** function appears.
Enter "100"
Now change the parameters.

Note!
A hardware locking can **only** be unlocked again via the display by pressing the +, − and E keys at the same time again. It is **not** possible to unlock the hardware by communication.

5.7 Resetting the customer parameters

It is advisable to reset the customer parameters if you want to use a device with an unknown history.

Effects of resetting:
- All customer parameters are reset to their default values.
- Customer interference echo suppression is **not** deleted.
- Linearisation is switched to **"linear"**, but the table values are kept. The table can be switched back on in the **"linearisation" (04)** function group in the **"linearisation" (041)** function.

In order to carry out the reset, enter the number "333" in the **"reset" (0A3)** function in the **"diagnostics" (0A)** function group.



Caution!
A reset may lead to impairment of the measurement. As a rule, a basic calibration is required after a reset.



Note!
The default values of each parameter are shown in bold in the menu overview in the appendix.



Note!
5-point linearity protocol
The specified measuring accuracy is a typical value → 66, "Performance characteristics".
With the production of the 5-point linearity protocol the measuring system (sensor and electronic) is adjusted exactly to one another and the measuring accuracy is optimized for the specified range. To realize this, the parameter "zero distance" is fine adjusted. After a reset the value for the zero distance has to be re-parameterized in the service menu according to the data on the associated 5-point linearity protocol. Please contact the Endress+Hauser service.

5.8 Resetting an interference echo suppression (tank map)

It is always advisable to reset the interference echo suppression (tank mapping) when:
- a device with an unknown history is used
- an incorrect suppression was input.

Proceed as follows:

1. Switch to the **"extended calibr." (05)** function group and to the **"selection" (050)** function.
2. Select **"extended map."**
3. Then proceed to the **"cust. tank map" (055)** function.
4. Select
   – **"reset"**, to delete (reset) the existing interference echo suppression.
   – **"inactive"** to deactivate an existing interference echo suppression. The suppression remains saved.
   – **"active"** to reactivate an existing interference echo suppression.



Note!
5-point linearity protocol
The specified measuring accuracy is a typical value → 66, "Performance characteristics"..
With the production of the 5-point linearity protocol the measuring system (sensor and electronic) is adjusted exactly to one another and the measuring accuracy is optimized for the specified range. To realize this, the parameter "zero distance" is fine adjusted. After a reset the value for the zero distance has to be re-parameterized in the service menu according to the data on the associated 5-point linearity protocol. Please contact the Endress+Hauser service.

6 Commissioning

Commission the Prosonic M in the following stages:
- Installation check
- Power-up device
- Basic calibration
- Measuring signal check using the envelope curve

The chapter describes the commissioning process using the on-site display. Commissioning using FieldCare is identical.

6.1 Function check

Make sure that all final checks have been completed before you start up your measuring point:
- Checklist “Post installation check” (→ 26).
- Checklist “Post connection check” (→ 30).

6.2 Power up instrument

After switching on the supply voltage, the instrument is first initialised.
Then the following appear for approximately five seconds:

- Device type
- Software version

Press E to exit this display.

On first power-up, you are requested to select the language for the display texts. Available language:

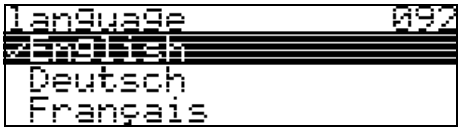

L00-fmrxf092-20-00-00-en-001

- English
- Deutsch
- Français
- Español
- Italiano
- Nederlands
- Japanese

Then you are requested to select the unit of length for your measurements. Available unit of length:



L00-fmrxf0c5-20-00-00-en-001

- m
- ft
- mm
- inch

A measured value is displayed. This is NOT equivalent to the level in your tank. Firstly carry out a basic calibration.

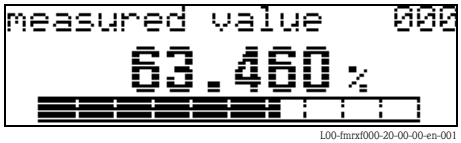

L00-fmrxf000-20-00-00-en-001

Press E to switch to the group selection.
Press E again to start the basic calibration.

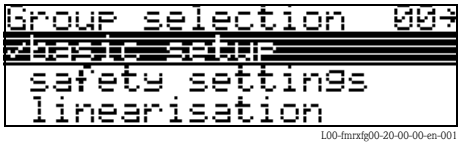

L00-fmrxfg00-20-00-00-en-001

6.3 Basic calibration

The **"Basic setup" (00)** function group lists all the functions which are required for a standard measurement task to commission the Prosonic M. When you have completed your input for a function, the next function appears automatically. In this way, you are guided through the complete calibration.

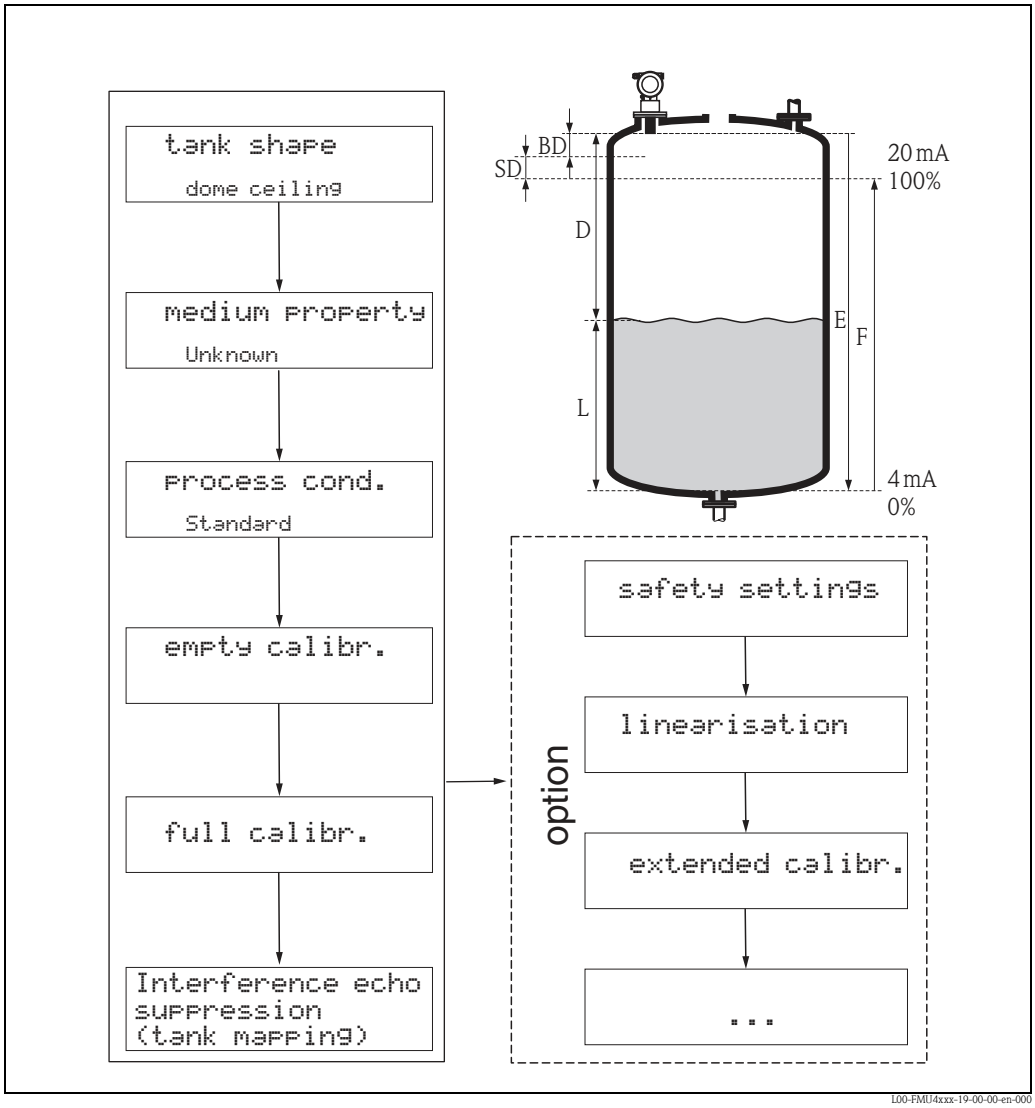

D Distance (distance from the sensor membrane (= reference point of the measurement) / product)
E Empty calibr. (= zero point
F Full calibr. (= span)
L Level
BD Block distance
SD Safety distance

6.3.1 Measuring point settings

Function "tank shape" (002)

In this function, select one of the following options:

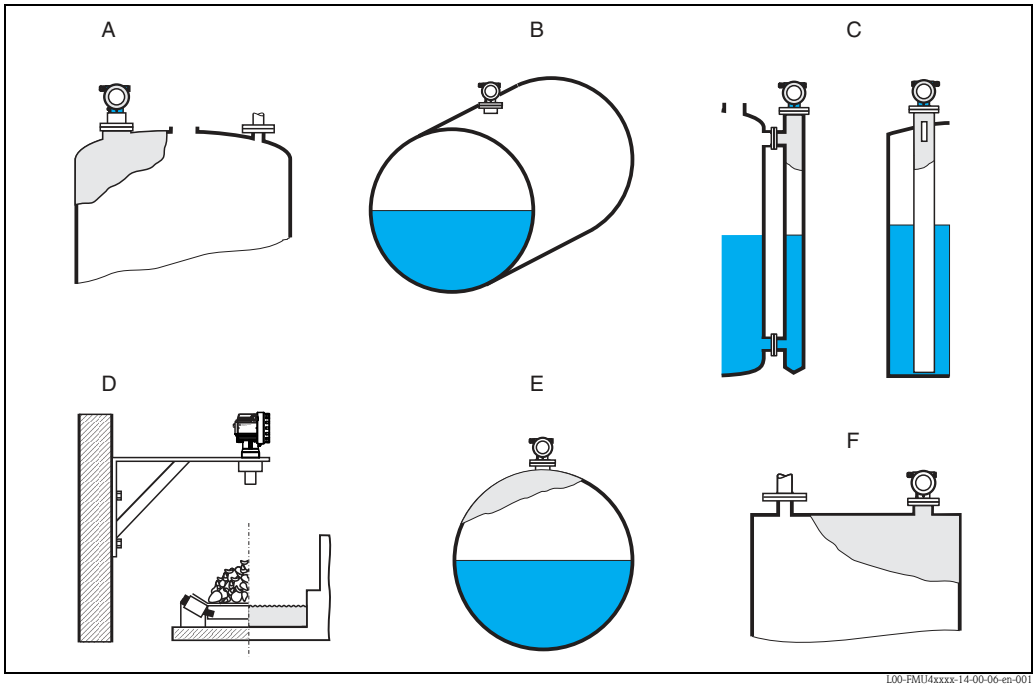

A *Dome ceiling*
B *Horizontal cyl*
C *Bypass, stilling well/ultrasonic guide pipe*
D *No ceiling, e.g. dumps, open levels, chanels, weirs*
E *Sphere*
F *Flat ceiling*

Function "medium property" (003)

Set the medium type in this function.

You have the following options:
- unknown (e.g. pasty media such as greases, creams, gels etc.)
- liquid
- solid, grain size < 4mm, (fine)
- solid, grain size > 4mm, (coarse)

Function "process conditions" (004)

For this function, you have the following options:

standard liquids	calm surface	turb. surface
For all fluid applications which do not fit in any of the following groups.	Storage tanks with immersion tube or bottom filling	Storage / accumulation tanks with uneven surface due to free filling, mixing nozzles or small bottom stirrers
	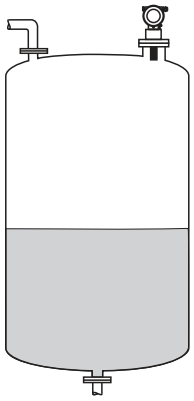 L00-FMU4xxxx-14-00-00-xx-001	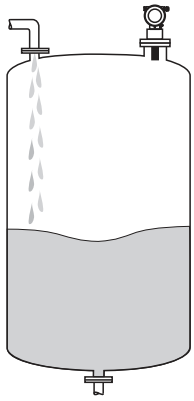 L00-FMU4xxxx-14-00-00-xx-002
The filters and output damping are set to average values.	The averaging filters and output damping are set to large values. -> Stable measured value -> Accurate measurement -> Slow reaction time	Special filters for stabilising the input signal are activated. -> Stable measured value -> Medium reaction time

add. agitator	fast change	standard solid
Moving surfaces (poss. with vortex formation) due to agitators	Rapid level change, particularly in small tanks	For all bulk solids applications which do not fit in any of the following groups.
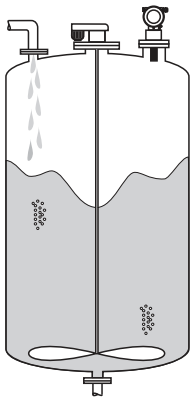 L00-FMU4xxxx-14-00-00-xx-003	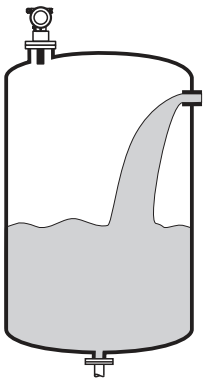 L00-FMU4xxxx-14-00-00-xx-004	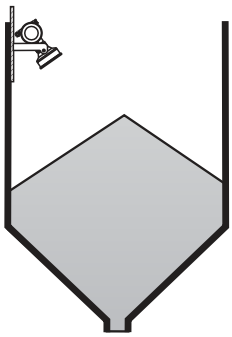 L00-FMU4xxxx-14-00-00-xx-006
Special filters for stabilising the input signal are set to large values. -> Stable measured value -> Medium reaction time	The averaging filters are set to small values. -> Rapid reaction time -> Possibly unstable measured value	The filter and output damping are set to average values.

solid dusty	conveyor belt	Test: no filter
Dusty bulk solids	Bulk solids with rapid level change	All the filters can be switched off for purposes of service and diagnosis.
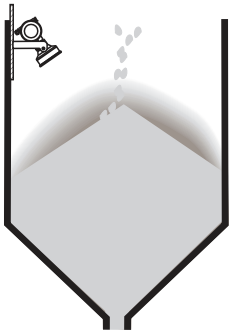 L00-FMU4xxxx-14-00-00-xx-007	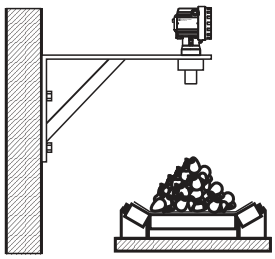 L00-FMU4xxxx-14-00-00-xx-005	
The filters are set to detect even relatively weak signals.	The averaging filters are set to small values. –> Rapid reaction time Possibly unstable measured value	All filters off

6.3.2 Empty and full calibration

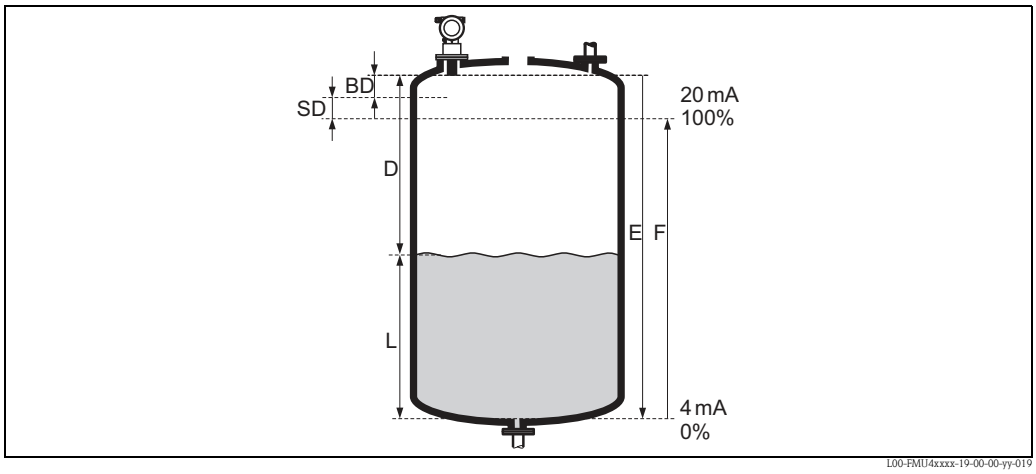

BD Blocking distance
SD Safety distance
E Empty calibration (= zero point)
F Full calibration (= span)
D Nozzle diameter
L Level

Function "empty calibration" (005)

In this function, enter the distance E from the sensor membrane to the minimum level (zero point).

Caution!
With dished boiler heads or conical outflows, the zero point should not be deeper than the point at which the ultrasonic wave impinges on the tank bottom.

Function "blocking distance" (059)

In this function the blocking distance (BD) of the sensor is displayed.

Caution!
When entering the full calibration (span), please take into account, that the maximum level may not project into the blocking distance (BD)

Note!
After basic calibration, enter a safety distance (SD) in the **"safety distance" (015)** function. If the level is within this safety distance, the Prosonic M signals a warning or an alarm, depending on your selection in the **"in safety distance" (016)** function.

Function "full calibration" (006)

In this function, enter the span F, i.e. the distance from the minimum level to the maximum level.

6.3.3 Interference echo suppression (tank mapping)

Function "dist./measured value" (008)

In the **"dist./meas.value" (008)** function, the measured distance D from the sensor membrane to the product surface is displayed together with level L. Check these values.

Function "check distance" (051)

The mapping is initialized by this function.

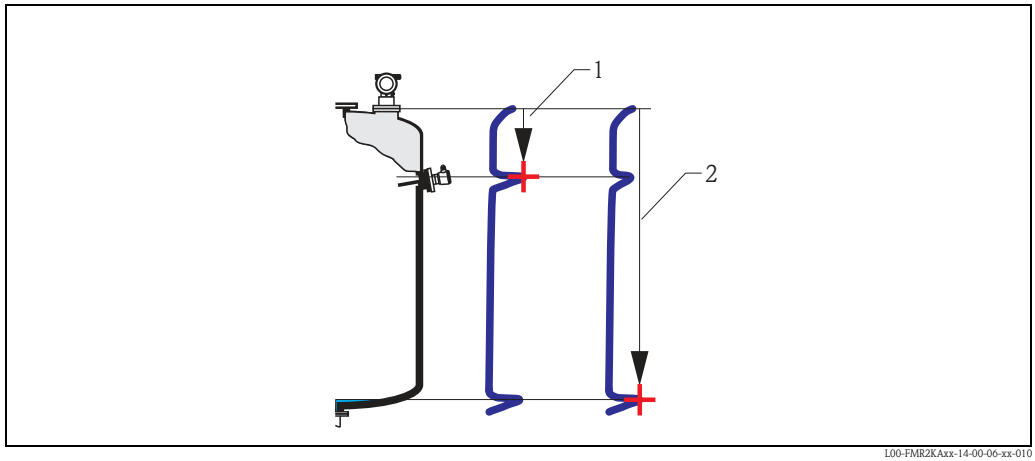

1 Distance too small
2 Distance = ok

Select
- **"distance=ok"** if the correct distance is displayed. Any echoes closer to the sensor will be suppressed by the following interference echo suppression.
- **"dist. too small"** if the displayed distance is too small. In this case, the signal comes from an interference echo which will be suppressed.
- **"dist. too big"** if the displayed distance is too large. This error cannot be cancelled by suppressing the interference echo. This means that the following two functions are skipped. Check the application parameters **"tank shape" (002)**, **"medium proerty" (003)** and **"process cond." (004)** and the **"empty calibr."(005)** in the **"basic setup" (00)** function group.
- **"dist. unknown"** if you do not know the actual distance. This means that the following two functions are skipped.
- **"manual"** if you want to specify the suppression area yourself in the following function.

Function "range of mapping" (052)

The suggested suppression area is displayed in this function. The reference point is always the sensor membrane. You can still edit the value. With manual suppression, the default value is 0 m.

Caution!
The suppression range must end 0.5 m (1.6 ft) in front of the echo of the actual level. With an empty tank, do not enter E but E – 0.5 m.

Function "start mapping" (053)

You have the following options for this function:
- **off**: Nothing is suppressed.
- **on**: Starts suppression.



Note!
If a mapping already exists, it will be overwritten up to the distance specified in the **"range of mapping" (052)** function. Beyond this distance the existing mapping remains unchanged.

Function dist./measured value (008)

After suppression, the measured distance D from the sensor membrane to the product surface is displayed together with the level. Check that the values correspond to the actual level and/or the actual distance.

The following cases may occur:
- Distance correct – Level correct -> End of basic calibration
- Distance incorrect – Level incorrect -> An additional interference echo suppression must be carried out. Go back to the **"check distance" (051)** function.
- Distance correct – Level incorrect -> Check the value of the **"empty calibr." (005)** function.

Return to group selection

After the mapping has been recorded the basic calibration is completed and the device automatically returns to the group selection.

6.4 Envelope curve

After the basic setup, an evaluation of the measurement with the aid of the envelope curve ("**envelope curve**" **(0E)** function group) is recommended.

6.4.1 Funxtion "plot settings" (0E1)

In this function, select whether you want to display
- just the envelope curve
- The envelope curve and the echo evaluation line FAC
- The envelope curve and interference echo suppression (map)

Note!
The FAC and the interference echo suppression (map) are explained in BA00240F "Prosonic M - Description of Instrument Functions"

6.4.2 Function "recording curve" (0E2)

In this function, specify whether you want to display
- an individual envelope curve
- The current envelope curve, with cyclical refreshment.

6.4.3 Function "envelope curve display" (0E3)

The envelope curve is displayed in this function. You can use it to obtain the following information:

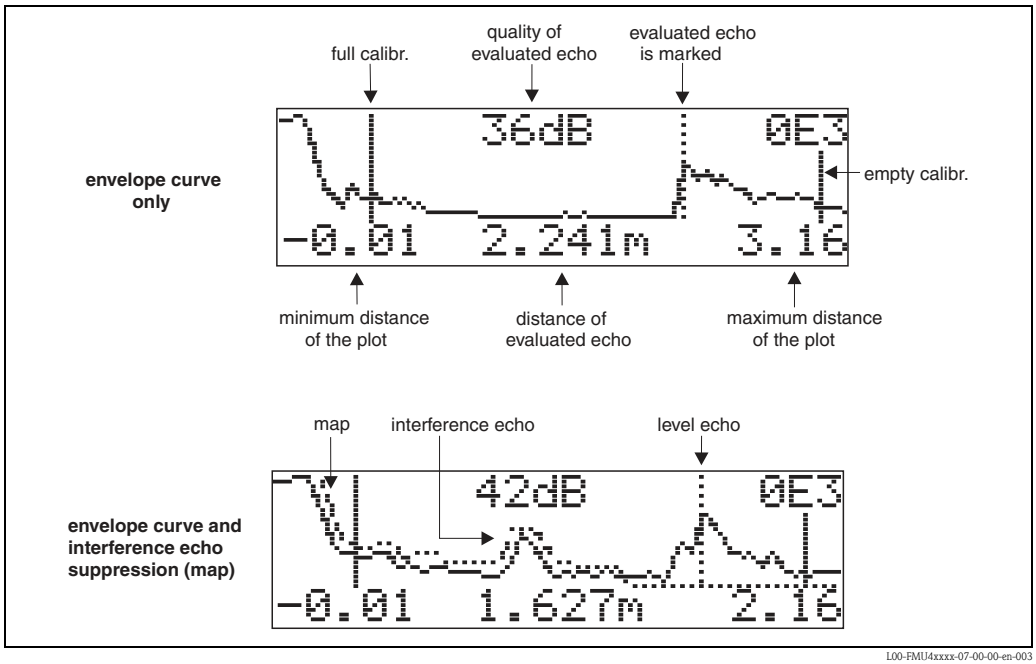

Check that the following conditions are fulfilled:
- The echo quality at the end of measuring range should be at least 10dB.
- There should be practically no interference echoes in front of the level signal.
- If interference echoes cannot be avoided, they must be below the suppression curve.

Note!
If the cyclical envelope curve display is still active on the display, the measured value is updated at a slower cycle time. We therefore advise you to exit the envelope curve display after optimising the measuring point. To do this, press E. (The instrument does not leave the envelope curve display automatically.)

6.4.4 Navigation in the envelope curve display

Using navigation, the envelope curve can be scaled horizontally and vertically and shifted to the left or the right. The active navigation mode is indicated by a symbol in the top left hand corner of the display.

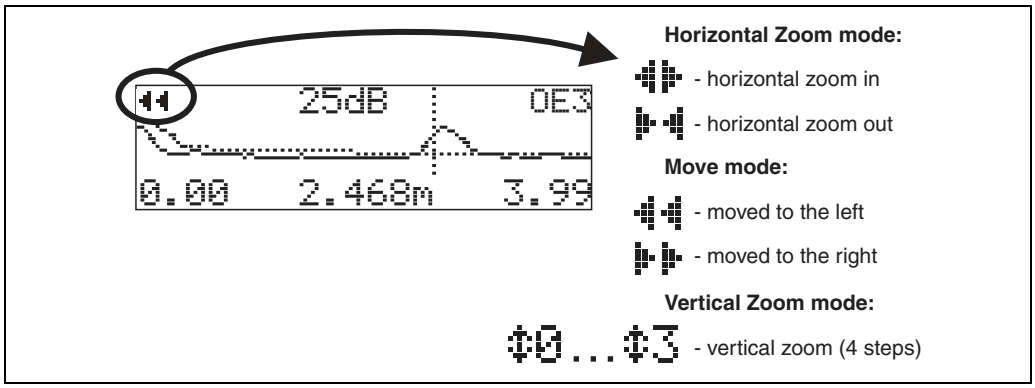

L00-FMxxxxxx-07-00-00-en-004

Horizontal Zoom mode

Firstly, go into the envelope curve display. Then press [+] or [−] to switch to the envelope curve navigation. You are then in Horizontal Zoom mode. Either ◂▸ or ▸◂ is displayed.
- [+] increases the horizontal scale.
- [−] reduces the horizontal scale.

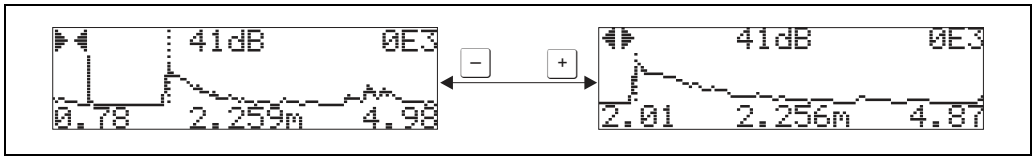

L00-FMxxxxxx-07-00-00-yy-007

Move mode

Then press [E] to switch to Move mode. Either ▸▸ or ◂◂ is displayed.
- [+] shifts the curve to the right.
- [−] shifts the curve to the left.

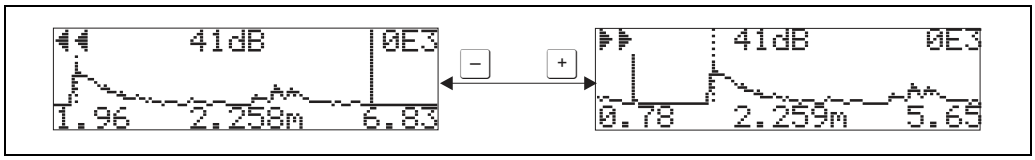

L00-FMxxxxxx-07-00-00-yy-008

Vertical Zoom mode

Press [E] once more to switch to Vertical Zoom mode. ⇳1 is displayed. You now have the following options.

- [+] increases the vertical scale.
- [–] reduces the vertical scale.

The display icon shows the current zoom factor (⇳0 to ⇳3).

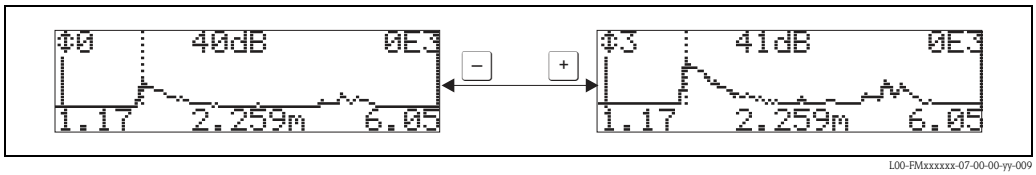

L00-FMxxxxxx-07-00-00-yy-009

Exiting the navigation

- Press [E] again to run through the different modes of the envelope curve navigation.
- Press [+] and [–] to exit the navigation. The set increases and shifts are retained. Only when you reactivate the "**recording curve**" **(0E2)** function the display settings return to their standard values.

7 Troubleshooting

7.1 System error messages

7.1.1 Current error

Errors which the Prosonic M detects during commissioning or operation are displayed:

- In the **"measured value" (000)** function
- In the **"diagnostics" (0A)** function group in the **"present error" (0A0)** function
  Only the highest priority error is displayed; in the case of multiple errors, you can scroll between the different error messages by pressing ⊞ or ⊟.

7.1.2 Last error

The last error is displayed in the **"diagnostics" (0A)** function group in the **"previous error" (0A1)** function. This display can be deleted in the **"clear last error" (0A2)** function.

7.1.3 Types of error

Type of error	Symbol	Meaning
Alarm (A)	 continuous	The output signal assumes a value which can be set using the **"output on alarm" (010)** function: ■ MAX: 110%, 22mA ■ MIN: -10%, 3,8mA ■ Hold: last value is on hold ■ User-specific value
Warning (W)	 flashing	The device continues measurement. An error message is displayed.
Alarm/Warning (E)	You can define whether the error should behave as an alarm or as a warning.	

7.1.4 Error codes

Code	Error description	Action
A102 A110 A152 A160	checksum error	Reset; If alarm still present after reset, replace electronics
W103	initialising	If the message does not disappear after several seconds, replace the electronics
A106	downloading	Wait; Message disappears after load sequence
A111 A113 A114 A115 A121 A125 A155 A164 A171	electronics defect	Reset; Check system for EMC, improve as necessary If alarm still present after reset, replace electronics
A116	download error	Check connection; Restart download
W153	initialising	Wait a few seconds; if error is still displayed, switch the power off and on again
A231	sensor defect	Check connection, if necessary replace HF module or electronics

Code	Error description	Action
A281	interruption temperature sensor	Exchange sensor
A502	Sensor type not detected	Exchange sensor and/or electronics
A512	recording of mapping	Alarm disappears after a few seconds
A521	new sensor type detected	Reset
W601	linearisation curve not monotone	Correct table (enter monotonously increasing table)
W611	less than 2 linea-risation points	Enter additional value pairs
W621	simulation on	Switch simulation mode off [**"output" (06)** function group, **"simulation" (065)** function]]
E641	no usable echo	Check basic calibration
E651	level in safety distance - risk of overspill	Error disappears when the level leaves the safety distance. Possibly reset the lock. [**"safety settings" (01)** function group, **"ackn. alarm" (017)** function]]
A661	Sensor overtemperature	
A671	Linearisation incomplete	Activate linearisation table
W681	current out of range	Carry out basic calibration; check linearisation
W691	Filling noise detected, level ramp is active	

7.2 Application errors

Error	Example	Elimination
Measured value (00) is incorrect but measured distance (008) is correct	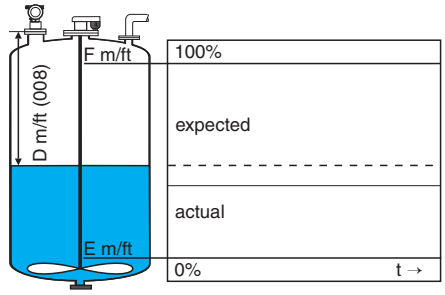 L00-FMR2xxxx-19-00-00-en-019	1. Check empty calibration (005) and full calibration (006) 2. Check linearisation – level/ullage (040) – max. scale(046) – diameter vessel(047) – linearisation table
Measured value (000) and measured distance (008) are incorrect		1. For measurements in bypass or stilling well: Select the according option in the **"tank shape" (002)** function 2. Carry out interference echo suppression
No change in measured value on filling/ emptying	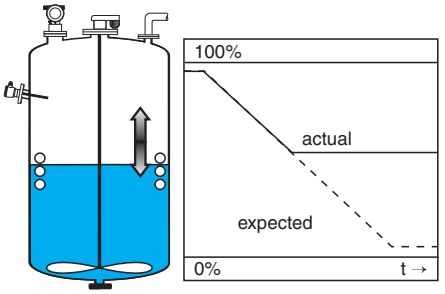 L00-FMR2xxxx-19-00-00-en-014	1. Carry out interference echo suppression 2. Clean sensor if necessary 3. If necessary, select better installation position 4. If necessary due to wide interference echoes, set function "detection window" (0A7) to "off"
With an uneven surface (e.g. filling, emptying, running agitator) the measured value may jump sporadically to higher levels	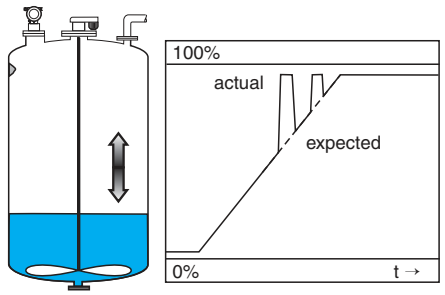 L00-FMR2xxxx-19-00-00-en-015 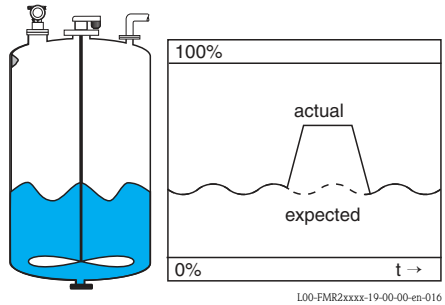 L00-FMR2xxxx-19-00-00-en-016	1. Carry out interference echo suppression 2. Set the process cond. (004) to "calm surface" or "add. agitator" 3. Increase output damping (058) 4. If necessary, select a different installation position and/or a larger sensor
On filling/emptying the measured value drops	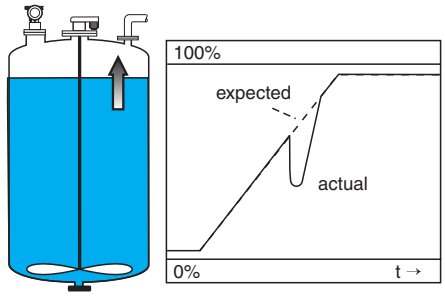 L00-FMR2xxxx-19-00-00-en-017	1. Check tank shape (002), e.g. "dome ceiling" or "horizontal cyl." 2. If possible, do not select a central installation position 3. Possible user stilling well/echo guide pipe

Error	Example	Elimination
E 641 (echo loss)	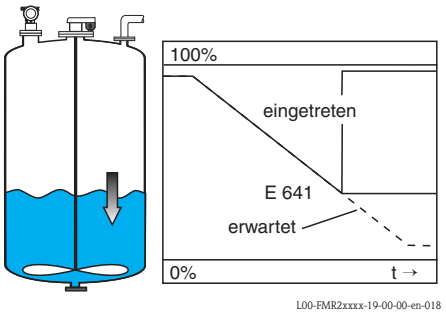 L00-FMR2xxxx-19-00-00-en-018	1. Check application parameters (002), (003) and (004) 2. If necessary, select a different installation position and/or a larger sensor 3. Align the sensor parallel to the product surface (particularly for bulk solids applications)

8 Maintenance and repairs

8.1 Exterior cleaning

When cleaning the exterior, always use cleaning agents that do not attack the surface of the housing and the seals.

8.2 Repairs

The Endress+Hauser repair concept assumes that the measuring devices have a modular design and that customers are able to undertake repairs themselves → 56, "Spare Parts". For more information on service and spare parts, contact the Service Department at Endress+Hauser.

8.3 Repairs to Ex-approved devices

When carrying out repairs to Ex-approved devices, please note the following:
- Repairs to Ex-approved devices may only be carried out by trained personnel or by the Endress+Hauser Service.
- Comply with the prevailing standards, national Ex-area regulations, safety instructions (XA) and certificates.
- Only use original spare parts from Endress+Hauser.
- When ordering a spare part, please note the device designation on the nameplate. Only replace parts with identical parts.
- Carry out repairs according to the instructions. On completion of repairs, carry our the specified routine test on the device.
- Only Endress+Hauser Service may convert a certified device into a different certified variant.
- Document all repair work and conversions.

8.4 Replacement

After a complete instrument or electronic module has been replaced, the parameters can be downloaded into the instrument again via the communication interface. Prerequisite to this is that the data were uploaded to the PC beforehand using FieldCare. Measurement can continue without having to carry out a new setup. Only a linearisation and a tank map (interference echo suppression) have to be recorded again.

8.5 Spare Parts

An overview of the spare parts for your device is available in the internet at www.endress.com. To obtain information on the spare parts, proceed as follows:

1. Go to "www.endress.com" and select your country.
2. Click "Instruments".

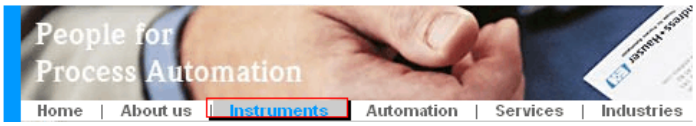

3. Enter the product name into the "product name" field.

Endress+Hauser product search

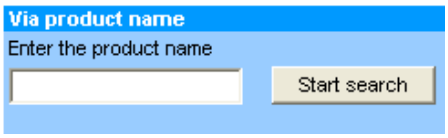

4. Select the device.
5. Click the "Accessories/Spare parts" tab.

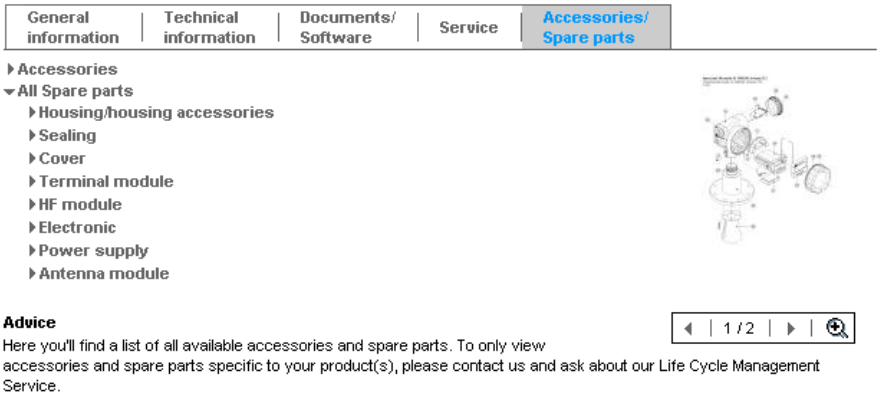

6. Select the required spare parts (You may also use the overview drawing on the right side of the screen.)

When ordering spare parts, always quote the serial number indicated on the nameplate. As far as necessary, the spare parts also include replacement instructions.

8.6 Return

Returning devices
The measuring device must be returned if repairs or a factory calibration are required, or if the wrong measuring device has been ordered or delivered. According to legal regulations, Endress+Hauser, as an ISO-certified company, is required to follow certain procedures when handling returned products that are in contact with medium.
To ensure swift, safe and professional device returns, please read the return procedures and conditions on the Endress+Hauser website at www.services.endress.com/return-material

8.7 Disposal

In case of disposal please seperate the different components according to their material consistence.

8.8 Software history

Software version / date	Changes to software	Changes to documentation
V 01.02.00 / 01.2002 V 01.02.02 / 03.2003	Original software Compatible with: ■ ToF Tool ■ Commuwin II (version 2.05.03 and higher ■ HART Communicator DXR 275 (from OS 4.6) with Rev. 1, DD 1	
V 01.02.04 / 02.2004	■ FMU 42 added ■ compatible with HART Communicator DXR 375	FMU 42 added
V 01.04.00 / 07.2006	■ "detection window" function added can be operated via: ■ ToF Tool from version 4.50 ■ HART Communicator DXR375 with Rev. 1, DD1	"detection window" added Version: 07.06

8.9 Contact addresses of Endress+Hauser

Contact addresses can be found on our homepage: www.endress.com/worldwide. If you have any questions, please do not hesitate to contact your Endress+Hauser representative.

9 Accessories

9.1 Weather protection cover

A Weather protection cover made of stainless steel is recommended for outdoor mounting (order code: 543199-0001). The shipment includes the protective cover and tension clamp.

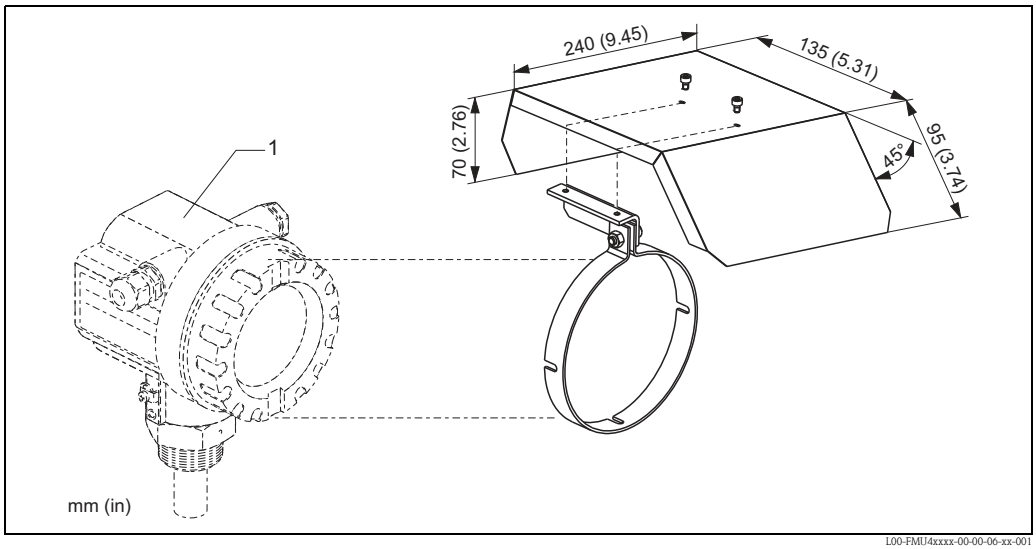

1 F12 / T12 housing

9.2 Installation bracket for FMU40, FMU41

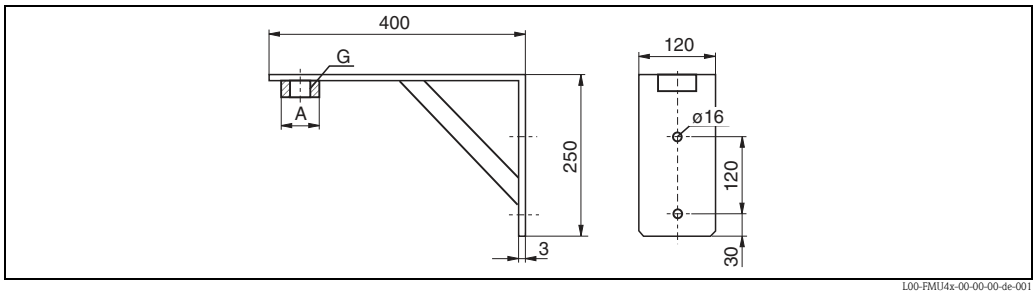

Dimensions in mm

- for FMU40, G1½: Order No. 942669-0000
- for FMU41, G2: Order No. 942669-0001

suited for NPT 1½" and 2" as well

9.3 Screw in flange

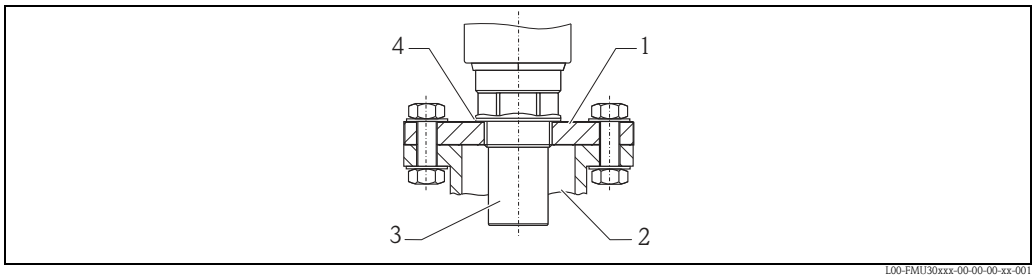

1 Screw in flange
2 Nozzle
3 Sensor
4 Sealing ring EPDM (supplied)

Screw in flange FAX50

015	Material:	
	BR1	DN50 PN10/16 A, steel flange EN1092-1
	BS1	DN80 PN10/16 A, steel flange EN1092-1
	BT1	DN100 PN10/16 A, steel flange EN1092-1
	JF1	2" 150lbs FF, steel flange ANSI B16.5
	JG1	3" 150lbs FF, steel flange ANSI B16.5
	JH1	4" 150lbs FF, steel flange ANSI B16.5
	JK2	8" 150lbs FF, PP max 3bar abs/44psia flange ANSI B16.5
	XIF	UNI flange 2"/DN50/50, PVDF max 4bar abs/58psia, suitable for 2" 150lbs/DN50 PN16/10K 50
	XIG	UNI flange 2"/DN50/50, PP max 4bar abs/58psia, suitable for 2" 150lbs/DN50 PN16/10K 50
	XIJ	UNI flange 2"/DN50/50, 316L max 4bar abs/58psia, suitable for 2" 150lbs/DN50 PN16/10K 50
	XJF	UNI flange 3"/DN80/80, PVDF max 4bar abs/58psia, suitable for 3" 150lbs/DN80 PN16/10K 80
	XJG	UNI flange 3"/DN80/80, PP max 4bar abs/58psia, suitable for 3" 150lbs/DN80 PN16/10K 80
	XJJ	UNI flange 3"/DN80/80, 316L max 4bar abs/58psia, suitable for 3" 150lbs/DN80 PN16/10K 80
	XKF	UNI flange 4"/DN100/100, PVDF max 4bar abs/58psia, suitable for 4" 150lbs/DN100 PN16/10K 100
	XKG	UNI flange 4"/DN100/100, PP max 4bar abs/58psia, suitable for 4" 150lbs/DN100 PN16/10K 100
	XKJ	UNI flange 4"/DN100/100, 316L max 4bar abs/58psia, suitable for 4" 150lbs/DN100 PN16/10K 100
	XLF	UNI flange 6"/DN150/150, PVDF max 4bar abs/58psia, suitable for 6" 150lbs/DN150 PN16/10K 150
	XLG	UNI flange 6"/DN150/150, PP max 4bar abs/58psia, suitable for 6" 150lbs/DN150 PN16/10K 150
	XLJ	UNI flange 6"/DN150/150, 316L max 4bar abs/58psia, suitable for 6" 150lbs/DN150 PN16/10K 150
	XMG	UNI flange DN200/200, PP max 4bar abs/58psia, suitable for DN200 PN16/10K 200
	XNG	UNI flange DN250/250, PP max 4bar abs/58psia, suitable for DN250 PN16/10K 250
	YYY	Special version

020	Sensor Connection:	
	A	Thread ISO228 G3/4
	B	Thread ISO228 G1
	C	Thread ISO228 G1-1/2
	D	Thread ISO228 G2
	E	Thread ANSI NPT3/4
	F	Thread ANSI NPT1
	G	Thread ANSI NPT1-1/2
	H	Thread ANSI NPT2
	Y	Special version

The filled in options result in the complete order code.

	015	020
FAX50 –		

9.4 Cantilever

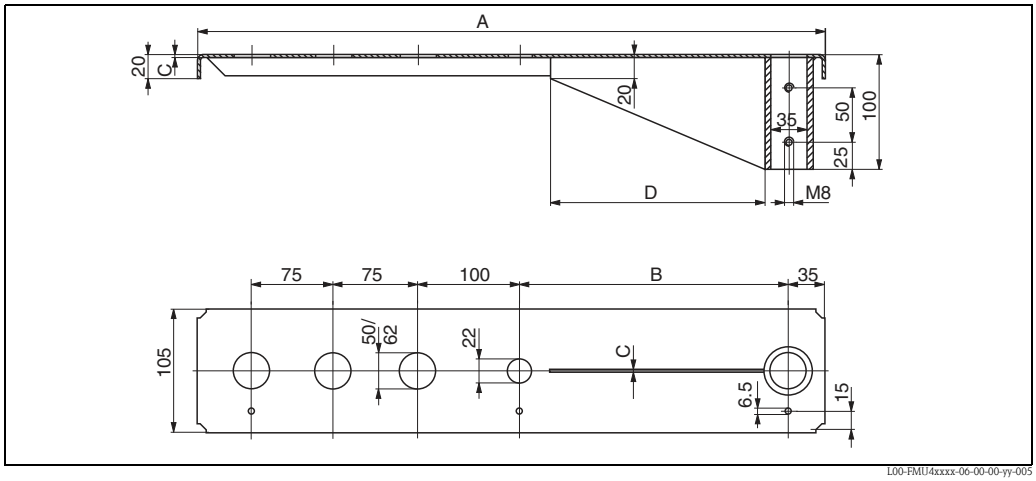

Dimensions in mm

A	B	C	D	for Sensor	Material	Order Code
585 (23)	250 (9.84)	2 (0.08)	200 (7.87)	1½"	316Ti (1.4571)	52014132
					galv. steel	52014131
				2"	316Ti (1.4571)	52014136
					galv. steel	52014135
1085 (42.7)	750 (29.5)	3 (0.12)	300 (11.8)	1½"	316Ti (1.4571)	52014134
					galv. steel	52014133
				2"	316Ti (1.4571)	52014138
					galv. steel	52014137

mm (in)

- The 50 mm (2.17 in) or 62 mm (2.44 in) orifices serve for the mounting of the FMU40 or FMU41 sensor, respecitvely.
- The 22 mm (0.87 in) orifice may be used for an additional sensor.

For the mounting of the cantilever can be used:

- mounting frame → 🗎 61
- wall bracket → 🗎 61

9.5 Mounting Frame

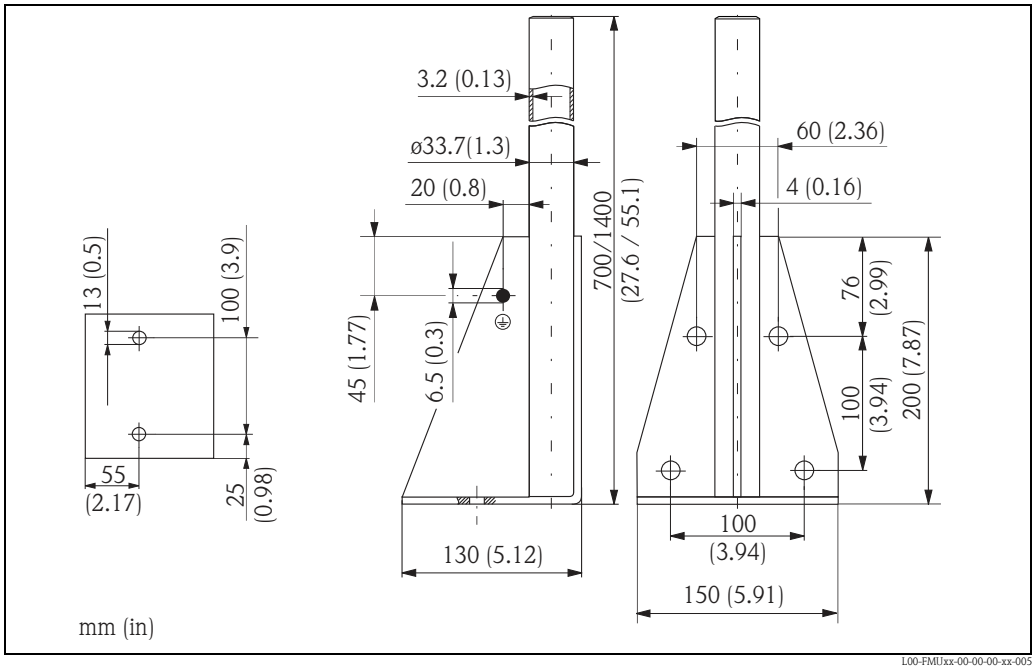

Height	Material	Order Code
700 (27.6)	galv. steel	919791-0000
700 (27.6)	316Ti (1.4571)	919791-0001
1400 (55.1)	galv. steel	919791-0002
1400 (55.1)	316Ti (1.4571)	919791-0003

mm (in)

9.6 Wall Bracket

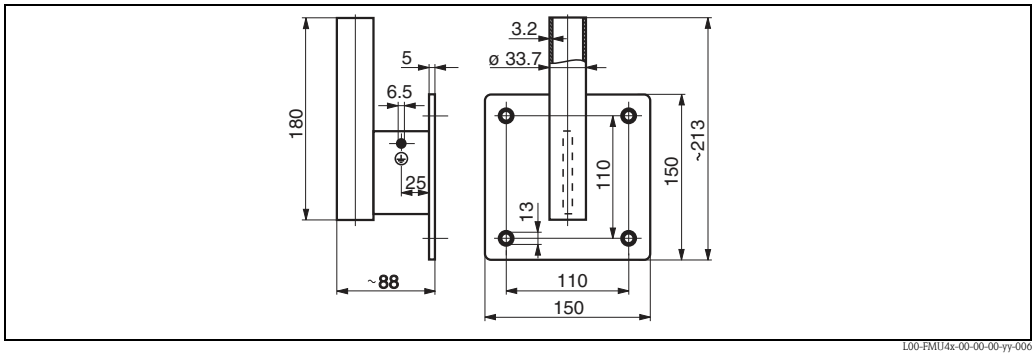

Dimensions in mm

Material	Order Code
galv. steel	919792-0000
316Ti (1.4571)	919792-0001

9.7 Mounting bracket for FMU42, FMU43, FMU44

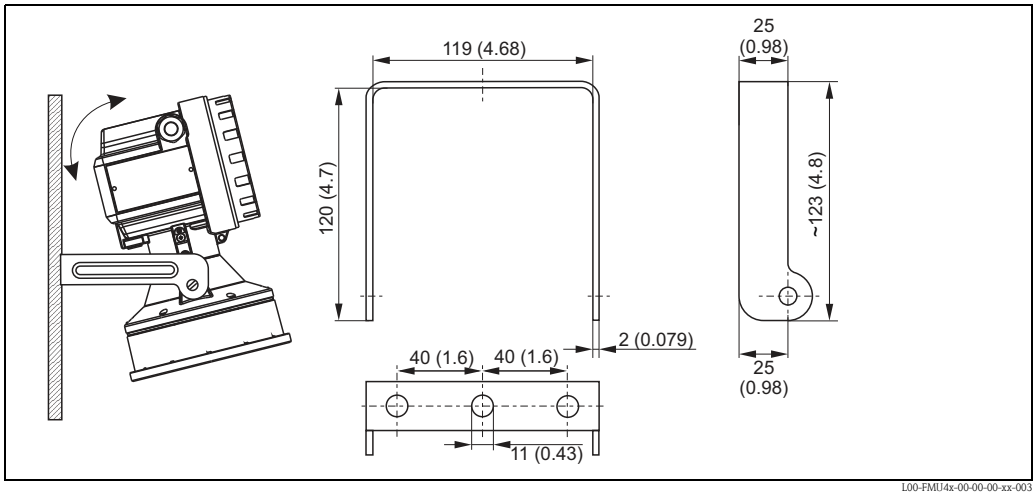

Dimensions in mm (in)

9.8 Commubox FXA195 HART

For intrinsically safe communication with FieldCare via the USB interface.
For details refer to TI00404F/00/EN.

9.9 Commubox FXA291

The Commubox FXA291 connects Endress+Hauser field instruments with CDI interface (= Endress+Hauser Common Data Interface) to the USB interface of a personal computer or a notebook. For details refer to TI00405C/07/EN.

Note!
For the instrument you need the "ToF Adapter FXA291" as an additional accessory.

9.10 ToF Adapter FXA291

The ToF Adapter FXA291 connects the Commubox FXA291 via the USB interface of a personal computer or a notebook for the instrument. For details refer to KA00271F/00/A2.

9.11 Remote display FHX40

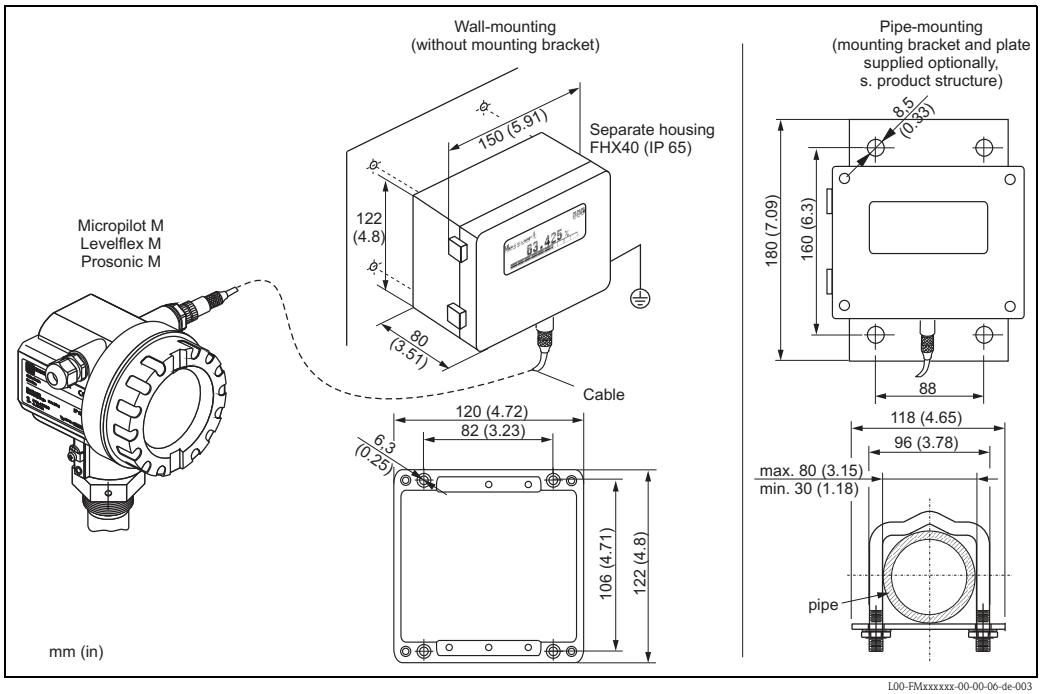

9.11.1 Technical data (cable and housing) and product structure

Max. cable length	20 m (65 ft)
Temperature range	-40 °C to +60 °C (-40 °F to 140 °F)
Degree of protection	IP65/67 (housing); IP68 (cable) acc. to IEC 60529
Dimensions [mm] / [inch]	122x150x80 (HxWxD) / 4.8x5.9x3.2

010	**Approval:**					
	A	Non-hazardous area				
	2	ATEX II 2G Ex ia IIC T6				
	3	ATEX II 2D Ex ia IIIC T80°C				
	G	IECEx Zone1 Ex ia IIC T6/T5				
	S	FM IS Cl. I Div.1 Gr. A-D, zone 0				
	U	CSA IS Cl. I Div.1 Gr. A-D, zone 0				
	N	CSA General Purpose				
	K	TIIS Ex ia IIC T6				
	C	NEPSI Ex ia IIC T6/T5				
	Y	Special version, TSP-Nr. to be spec.				
020		**Cable:**				
		1	20m / 65ft: for HART			
		5	20m / 65ft: for PROFIBUS PA/FOUNDATION Fieldbus			
		9	Special version, TSP-Nr. to be spec.			
030			**Additional option:**			
			A	Basic version		
			B	Mounting bracket, pipe 1"/ 2"		
			Y	Special version, TSP-Nr. to be spec.		
995				**Marking:**		
				1	Tagging (TAG)	
FHX40 -					Complete product designation	

For connection of the remote display FHX40 use the cable which fits the communication version of the respective instrument.

10 Technical Data

10.1 Technical data at a glance

10.1.1 Input

Measured variable

The distance D between the sensor membrane and the product surface is measured.

Using the linearisation function, the device uses D to calculate:
- level L in any units
- volume V in any units
- flow Q across measuring weirs or open channels in any units

Maximum range/blocking distance

Sensor	Maximum range in liquids[1]	Maximum range in solids[1]	blocking distance
FMU40	5 m (16 ft)	2 m (6.6 ft)	0.25 m (0.8 ft)
FMU41	8 m (26 ft)	3.5 m (11 ft)	0.35 m (1.1 ft)
FMU42	10 m (33 ft)	5 m (16 ft)	0.4 m (1.3 ft)
FMU43	15 m (49 ft)	7 m (23 ft)	0.6 m (2.0 ft)
FMU44	20 m (66 ft)	10 m (33 ft)	0.5 m (1.6 ft)

[1]The actual range is dependent on the measuring conditions. Refer to Technical Information TI00365F/00/EN for an estimation.

10.1.2 Output

Output signal

4 to 20 mA with HART protocol

Signal on alarm

- Error symbol, error code and plain text description on the on-site display
- Error code via HART communication
- Current output (configurable)

10.1.3 Power supply

Terminals

Cable cross-section: 0.5 to 2.5 mm (20 to 14 AWG)

Cable entry

- Cable gland M20x1.5 (recommended cable diameter 6 to 10 mm (0.24 to 0.39 in)
- Cable entry G½ or ½ NPT

Supply voltage

- Loop-powered HART: 14 to 36 V (depending on output current)
- Loop-powered fixed current: 10 to 36 V
- 4-wire DC: 10.5 to 32 VDC
- 4-wire AC: 90 to 253 VAC

There may be additional restrictions for devices with an explosion protection certificate. Refer to the notes in the appropriate safety instructions (XA).

Power consumption

Version	Power consumption
2-wire	51 mW to 800 mW
4-wire AC	max. 4VA
4-wire DC; FMU40/41	330 mW to 830 mW
4-wire DC; FMU42/43	600 mW to 1 W

Load HART

Minimum load for HART communication: 250 Ω

HART ripple

47 to 125 Hz: Vpp = 200 mV (measured at 500 Ω)

Max. noise HART

500 Hz to 10 kHz: Vrms = 2.2 mV (measured at 500 Ω)

Galvanic isolation

With 4-wire devices, the evaluation electronics and mains voltage are galvanically isolated from each other.

10.1.4 Performance characteristics

Reaction time

The reaction time depends on the parameter settings. The minimum values are:

- 2-wire devices (FMU40/41/42): min. 2 s
- 2-wire devices (FMU44): min. 3 s
- 4-wire devices (FMU40/41/42/43/44): 0.5 s

Reference operating conditions

- Temperature = +20 °C (+68 °F)
- Pressure = 1013 mbar abs. (15 psi abs.)
- Humidity = 50 %
- Ideal reflective surface (e.g. calm, smooth fluid surface)
- No interference reflections within signal beam
- Set application parameters:
  - Tank shape = flat ceiling
  - Medium property = liquid
  - process conditions = calm surface

Measured value resolution

Sensor	Measured value resolution
FMU40	1 mm (0.04 in)
FMU41	1 mm (0.04 in)
FMU42	2 mm (0.08 in)
FMU43	2 mm (0.08 in)
FMU44	2 mm (0.08 in)

Measuring error

Typical specifications for reference operating conditions (include linearity, repeatability, and hysteresis):

Sensor	Measuring error
FMU40	±2mm (0.08 in) or 0.2% of set measuring distance (empty calibration)[1]
FMU41	± 2 mm (0.08 in) or 0.2% of set measuring distance (empty calibration)[1]
FMU42	± 4 mm (0.16 in) or 0.2% of set measuring distance (empty calibration)[1]
FMU43	± 4 mm (0.16 in) or 0.2% of set measuring distance (empty calibration)[1]
FMU44	± 4 mm (0.16 in) or 0.2% of set measuring distance (empty calibration)[1]

[1]whichever is greater

Influence of the vapor pressure

The vapor pressure at 20 °C (68 °F) gives a hint on the accuracy of the ultrasonic level measurement. If the vapor pressure at 20 °C (68 °F) is below 50 mbar (1 psi), ultrasonic level measurement is possible with a very high accuracy. This is valid for water, aqueous solutions, water-solid-solutions, dilute acids (hydrochloric acid, sulfuric acid, ...), dilute bases (caustic soda, ...), oils, greases, slurries, pastes, ...
High vapor pressures or outgassing media (ethanol, acetone, ammonia, ...) can influence the accuracy. If conditions like these are present, please contact the Endress+Hauser support.

10.1.5 Operating conditions: Environment

Ambient temperature

-40 °C to +80 °C (-40 °F to +176 °F)
The functionality of the LC display becomes restricted at Tu<-20 °C (Tu<-4 °F) and Tu>+60 °C (Tu>+140 °F).
If the device is operated outdoors in strong sunlight, you should use a protective cover.

Storage temperature

-40 °C to +80 °C (-40 °F to +176 °F)

Climate class

DIN EN 60068-2-38 (Test Z/AD) DIN/IEC 68 T2-30Db

Ingress protection

- With closed housing, tested according to
  – IP 68, NEMA 6P (24h at 1.83 m (6 ft) under water surface)
  – IP 66, NEMA 4x
- With open housing: IP 20, NEMA 1 (also ingress protection of the display)

Vibration resistance

DIN EN 60068-2-64 / IEC 68-2-64: 20 to 2000 Hz, 1 $(m/s^2)^2/Hz$; 3 x 100 min

Electromagnetic compatibility (EMC)

- Electromagnetic compatibility according to all relevant requirements of the EN 61326- series and NAMUR recommendation EMC (NE21). For details see declaration of conformity.
- A standard installation cable is sufficient if only the analogue signal is used. Use a screened cable when working with a superimposed communication signal (HART).

10.1.6 Operating conditions: Process

Process temperature	-40°C to +80°C (-40 °F to +176 °F) A temperature sensor is integrated in the sensor for correction of the temperature-dependent time-of-flight.
Process pressure	■ FMU40/41: 0.7 bar to 3 bar abs. (10.15 psi to 43.5 psi abs.) ■ FMU42/43/44: 0.7 bar to 2.5 bar abs. (10.15 psi to 36.25 psi abs.)

11 Appendix

11.1 Operating menu

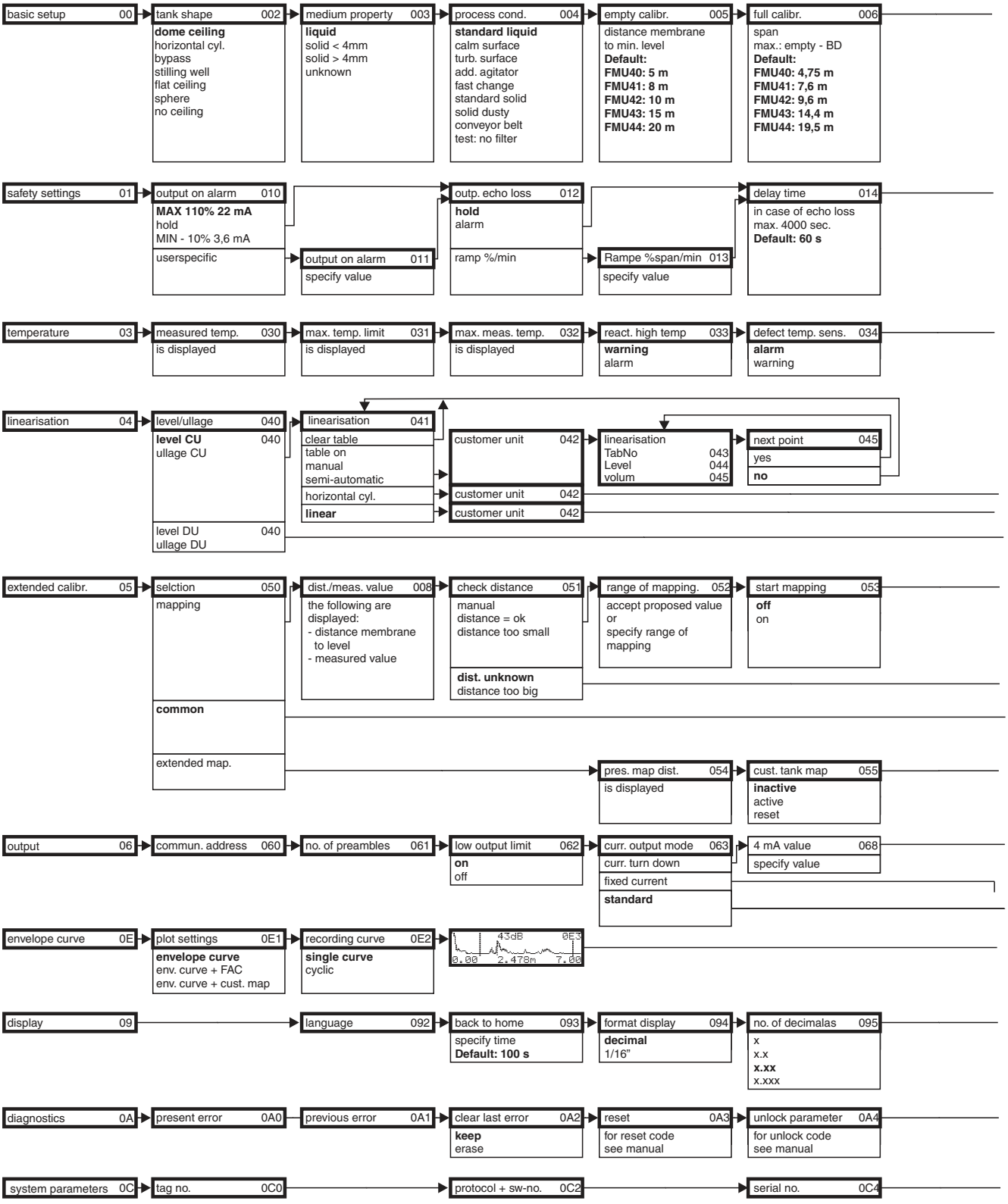

Note! The Default values of the parameters are typed in bold face.

L00-FMU4xxxx-19-00-01-en-005

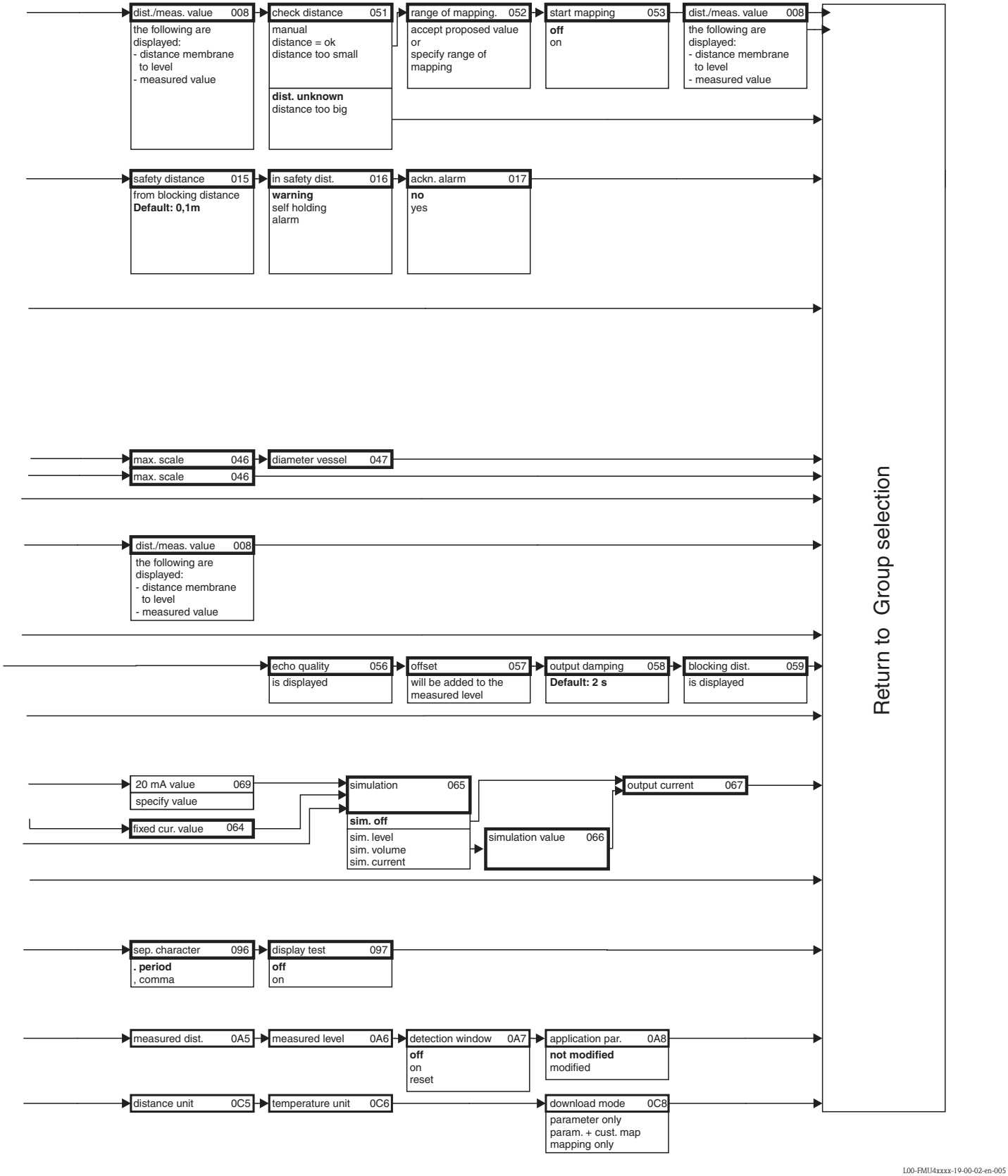

L00-FMU4xxxx-19-00-02-en-005

11.2 Measuring principle

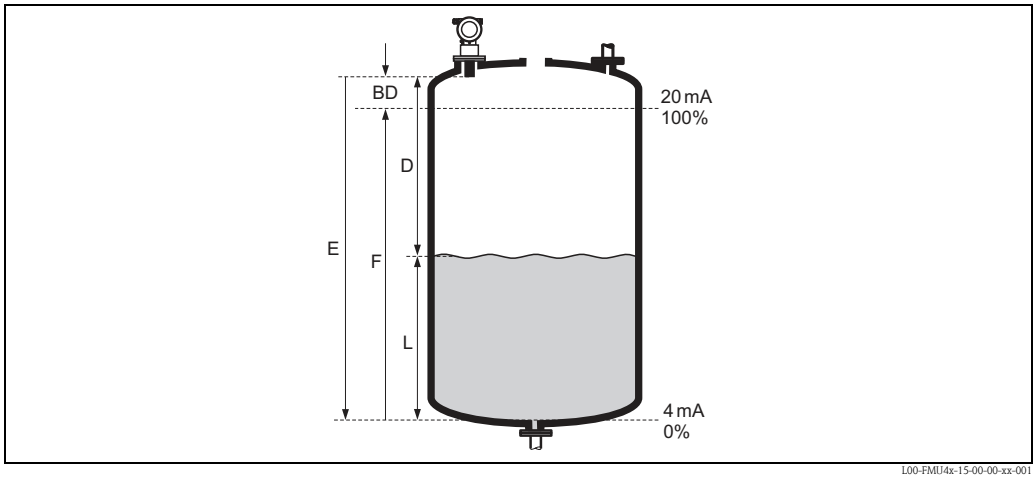

***E:** Empty distance; **F:** Span (full distance); **D:** Distance from sensor membrane - product surface; **L:** Level; **BD:** Blocking distance*

Sensor	BD	Max. range fluids	Max. range bulk materials
FMU40	0.25 m (0.8 ft)	5 m (16 ft)	2 m (6.6 ft)
FMU41	0.35 m (1.1 ft)	8 m (26 ft)	3.5 m (11 ft)
FMU42	0.4 m (1.3 ft)	10 m (33 ft)	5 m (16 ft)
FMU43	0.6 m (2.0 ft)	15 m (49 ft)	7 m (23 ft)
FMU44	0.5 m (1.6 ft)	20 m (66 ft)	10 m (33 ft)

11.2.1 Time-of-flight method

The sensor of the Prosonic M transmits ultrasonic pulses in the direction of the product surface. There, they are reflected back and received by the sensor. The Prosonic M measures the time t between pulse transmission and reception. The instrument uses the time t (and the velocity of sound c) to calculate the distance D between the sensor membrane and the product surface:

$D = c \cdot t/2$

As the device knows the empty distance E from a user entry, it can calculate the level as follows:

$L = E - D$

An integrated temperature sensor compensates for changes in the velocity of sound caused by temperature changes.

11.2.2 Interference echo suppression

The interference echo suppression feature on the Prosonic M ensures that interference echos (e.g. from edges, welded joints and installations) are not interpreted as a level echo.

11.2.3 Calibration

Enter the empty distance E and the span F to calibrate the device.

11.2.4 Blocking distance

Span F may not extend into the blocking distance BD. Level echos within the blocking distance cannot be evaluated due to the transient characteristics of the sensor.

Index

A
alarm 51
application errors 53

B
blocking distance 24, 45

C
cantilever 60
CE mark 15
cleaning 55
Commubox 62
connection 27

D
declaration of conformity 15
display appearance 32
display symbols 32

E
error codes 51
error messages 51

F
FHX40 63
Field Xpert SFX100 36
flow measurements 22
full calibration 45

H
hardware security locking 38
hazardous area 4

I
installation bracket 58
interference echo suppression 46

K
key assignment 33
Khafagi-Venturi flume 22

L
level measurements 21

M
measuring principle 72
Measuring range 24

N
nozzle 24

O
on-site display 35
operating menu 70

P
process conditions 43

R
range 25
repairs to Ex-approved devices 55
return 57

S
Service Interface FXA291 62
shafts 21
software security locking 38
Spare Parts 56

T
turn housing 26

W
warning 51
weather protection cover 58

www.endress.com/worldwide

Endress+Hauser

People for Process Automation

BA00237F/00/EN/13.12
71164384
FM+SGML 9.0

71164384