BA01062D/06/EN/06.17
71380218

Valid as of version
02.00.zz (Device firmware)

Operating Instructions
Proline Promag L 400 HART

Electromagnetic flowmeter

HART COMMUNICATION PROTOCOL

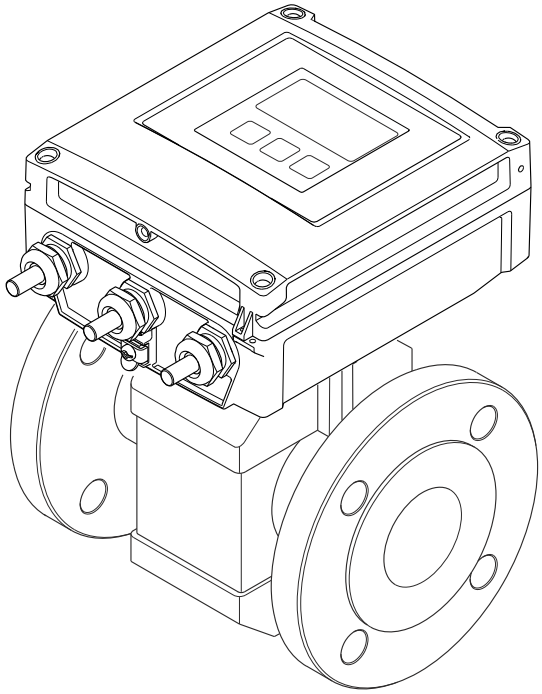

Endress+Hauser
People for Process Automation

- Make sure the document is stored in a safe place such that it is always available when working on or with the device.
- To avoid danger to individuals or the facility, read the "Basic safety instructions" section carefully, as well as all other safety instructions in the document that are specific to working procedures.
- The manufacturer reserves the right to modify technical data without prior notice. Your Endress+Hauser Sales Center will supply you with current information and updates to these instructions.

Table of contents

1 About this document 6
1.1 Document function 6
1.2 Symbols used 6
1.2.1 Safety symbols 6
1.2.2 Electrical symbols 6
1.2.3 Communication symbols 6
1.2.4 Tool symbols 7
1.2.5 Symbols for certain types of information 7
1.2.6 Symbols in graphics 7
1.3 Documentation 8
1.3.1 Standard documentation 8
1.3.2 Supplementary device-dependent documentation 8
1.4 Registered trademarks 9

2 Basic safety instructions 10
2.1 Requirements for the personnel 10
2.2 Designated use 10
2.3 Workplace safety 11
2.4 Operational safety 11
2.5 Product safety 11
2.6 IT security 12
2.7 Device-specific IT security 12
2.7.1 Protecting access via hardware write protection 12
2.7.2 Protecting access via a password 12
2.7.3 Access via fieldbus 13
2.7.4 Access via Web server 13

3 Product description 14
3.1 Product design 14

4 Incoming acceptance and product identification 15
4.1 Incoming acceptance 15
4.2 Product identification 15
4.2.1 Transmitter nameplate 16
4.2.2 Sensor nameplate 17
4.2.3 Symbols on measuring device 18

5 Storage and transport 19
5.1 Storage conditions 19
5.2 Transporting the product 19
5.2.1 Measuring devices without lifting lugs 19
5.2.2 Measuring devices with lifting lugs . . 20
5.2.3 Transporting with a fork lift 20
5.3 Packaging disposal 20

6 Installation 21
6.1 Installation conditions 21
6.1.1 Mounting position 21
6.1.2 Requirements from environment and process 23
6.1.3 Special mounting instructions 26
6.2 Mounting the measuring device 27
6.2.1 Required tools 27
6.2.2 Preparing the measuring device 27
6.2.3 Mounting the sensor 27
6.2.4 Mounting the transmitter of the remote version 32
6.2.5 Turning the transmitter housing 34
6.2.6 Turning the display module 36
6.3 Post-installation check 37

7 Electrical connection 38
7.1 Connection conditions 38
7.1.1 Requirements for connecting cable . . . 38
7.1.2 Required tools 40
7.1.3 Terminal assignment 40
7.1.4 Shielding and grounding 41
7.1.5 Requirements for the supply unit 41
7.1.6 Preparing the measuring device 41
7.1.7 Preparing the connecting cable for the remote version 42
7.2 Connecting the measuring device 43
7.2.1 Connecting the remote version 43
7.2.2 Connecting the transmitter 45
7.2.3 Ensure potential equalization 46
7.3 Special connection instructions 48
7.3.1 Connection examples 48
7.4 Ensuring the degree of protection 50
7.4.1 Degree of protection IP66/67, Type 4X enclosure 50
7.5 Post-connection check 50

8 Operation options 51
8.1 Overview of operation options 51
8.2 Structure and function of the operating menu 52
8.2.1 Structure of the operating menu 52
8.2.2 Operating philosophy 53
8.3 Access to the operating menu via the local display 54
8.3.1 Operational display 54
8.3.2 Navigation view 55
8.3.3 Editing view 57
8.3.4 Operating elements 59
8.3.5 Opening the context menu 59
8.3.6 Navigating and selecting from list . . . 61
8.3.7 Calling the parameter directly 61
8.3.8 Calling up help text 62
8.3.9 Changing the parameters 63

8.3.10 User roles and related access authorization 64
8.3.11 Disabling write protection via access code 64
8.3.12 Enabling and disabling the keypad lock 65
8.4 Access to the operating menu via the Web browser 65
8.4.1 Function range 65
8.4.2 Prerequisites 66
8.4.3 Establishing a connection 67
8.4.4 Logging on 69
8.4.5 User interface 70
8.4.6 Disabling the Web server 71
8.4.7 Logging out 71
8.5 Access to the operating menu via the operating tool 71
8.5.1 Connecting the operating tool 72
8.5.2 Field Xpert SFX350, SFX370 73
8.5.3 FieldCare 74
8.5.4 DeviceCare 75
8.5.5 AMS Device Manager 75
8.5.6 SIMATIC PDM 76
8.5.7 Field Communicator 475 76

9 System integration 77

9.1 Overview of device description files 77
9.1.1 Current version data for the device . . . 77
9.1.2 Operating tools 77
9.2 Measured variables via HART protocol 77
9.3 Other settings 79

10 Commissioning 81

10.1 Function check 81
10.2 Switching on the measuring device 81
10.3 Setting the operating language 81
10.4 Configuring the measuring device 81
10.4.1 Defining the tag name 82
10.4.2 Setting the system units 83
10.4.3 Configuring the status input 84
10.4.4 Configuring the current output 86
10.4.5 Configuring the pulse/frequency/switch output 87
10.4.6 Configuring the local display 93
10.4.7 Configuring the output conditioning 94
10.4.8 Configuring the low flow cut off 96
10.4.9 Configuring empty pipe detection . . . 98
10.5 Advanced settings 99
10.5.1 Carrying out a sensor adjustment . . . 100
10.5.2 Configuring the totalizer 100
10.5.3 Carrying out additional display configurations 102
10.5.4 Performing electrode cleaning 105
10.5.5 WLAN configuration 105
10.5.6 Using parameters for device administration 106
10.6 Simulation 108
10.7 Protecting settings from unauthorized access 111
10.7.1 Write protection via access code . . . 111
10.7.2 Write protection via write protection switch 112

11 Operation 114

11.1 Reading the device locking status 114
11.2 Adjusting the operating language 114
11.3 Configuring the display 114
11.4 Reading measured values 114
11.4.1 Process variables 115
11.4.2 "Totalizer" submenu 115
11.4.3 Input values 116
11.4.4 Output values 116
11.5 Adapting the measuring device to the process conditions 117
11.6 Performing a totalizer reset 117
11.6.1 Function scope of the "Control Totalizer" parameter 118
11.6.2 Function scope of the "Reset all totalizers" parameter 118
11.7 Showing data logging 118

12 Diagnostics and troubleshooting . . 121

12.1 General troubleshooting 121
12.2 Diagnostic information via light emitting diodes 123
12.2.1 Transmitter 123
12.3 Diagnostic information on local display 124
12.3.1 Diagnostic message 124
12.3.2 Calling up remedial measures 126
12.4 Diagnostic information in the Web browser . 126
12.4.1 Diagnostic options 126
12.4.2 Calling up remedy information 127
12.5 Diagnostic information in DeviceCare or FieldCare 128
12.5.1 Diagnostic options 128
12.5.2 Calling up remedy information 129
12.6 Adapting the diagnostic information 129
12.6.1 Adapting the diagnostic behavior . . . 129
12.6.2 Adapting the status signal 129
12.7 Overview of diagnostic information 130
12.8 Pending diagnostic events 133
12.9 Diagnostic list 134
12.10 Event logbook 134
12.10.1 Reading out the event logbook 134
12.10.2 Filtering the event logbook 135
12.10.3 Overview of information events 135
12.11 Resetting the measuring device 137
12.11.1 Function scope of the "Device reset" parameter 137
12.12 Device information 137
12.13 Firmware history 139

13 Maintenance 140

13.1 Maintenance tasks 140
13.1.1 Exterior cleaning 140
13.1.2 Interior cleaning 140
13.1.3 Replacing seals 140
13.2 Measuring and test equipment 140
13.3 Endress+Hauser services 140

14 Repairs 141

14.1 General notes 141
14.1.1 Repair and conversion concept 141
14.1.2 Notes for repair and conversion 141
14.2 Spare parts 141
14.3 Endress+Hauser services 141
14.4 Return 141
14.5 Disposal 142
14.5.1 Removing the measuring device 142
14.5.2 Disposing of the measuring device . . 142

15 Accessories 143

15.1 Device-specific accessories 143
15.1.1 For the transmitter 143
15.1.2 For the sensor 143
15.2 Communication-specific accessories 143
15.3 Service-specific accessories 144
15.4 System components 145

16 Technical data 146

16.1 Application 146
16.2 Function and system design 146
16.3 Input 146
16.4 Output 149
16.5 Power supply 152
16.6 Performance characteristics 153
16.7 Installation 155
16.8 Environment 155
16.9 Process 156
16.10 Mechanical construction 158
16.11 Operability 170
16.12 Certificates and approvals 174
16.13 Application packages 175
16.14 Accessories 176
16.15 Supplementary documentation 176

Index 178

1 About this document

1.1 Document function

These Operating Instructions contain all the information that is required in various phases of the life cycle of the device: from product identification, incoming acceptance and storage, to mounting, connection, operation and commissioning through to troubleshooting, maintenance and disposal.

1.2 Symbols used

1.2.1 Safety symbols

Symbol	Meaning
DANGER	**DANGER!** This symbol alerts you to a dangerous situation. Failure to avoid this situation will result in serious or fatal injury.
WARNING	**WARNING!** This symbol alerts you to a dangerous situation. Failure to avoid this situation can result in serious or fatal injury.
CAUTION	**CAUTION!** This symbol alerts you to a dangerous situation. Failure to avoid this situation can result in minor or medium injury.
NOTICE	**NOTE!** This symbol contains information on procedures and other facts which do not result in personal injury.

1.2.2 Electrical symbols

Symbol	Meaning
⎓	Direct current
~	Alternating current
⎓ ~	Direct current and alternating current
⏚	**Ground connection** A grounded terminal which, as far as the operator is concerned, is grounded via a grounding system.
⊕	**Protective Earth (PE)** A terminal which must be connected to ground prior to establishing any other connections. The ground terminals are situated inside and outside the device: ▪ Inner ground terminal: Connects the protectiv earth to the mains supply. ▪ Outer ground terminal: Connects the device to the plant grounding system.

1.2.3 Communication symbols

Symbol	Meaning
	Wireless Local Area Network (WLAN) Communication via a wireless, local network.
	Bluetooth Wireless data transmission between devices over a short distance.

Symbol	Meaning
	**LED** Light emitting diode is off.
	**LED** Light emitting diode is on.
	**LED** Light emitting diode is flashing.

1.2.4 Tool symbols

Symbol	Meaning
	Torx screwdriver
	Phillips head screwdriver
	Open-ended wrench

1.2.5 Symbols for certain types of information

Symbol	Meaning
	**Permitted** Procedures, processes or actions that are permitted.
	**Preferred** Procedures, processes or actions that are preferred.
	**Forbidden** Procedures, processes or actions that are forbidden.
	**Tip** Indicates additional information.
	Reference to documentation.
	Reference to page.
	Reference to graphic.
	Notice or individual step to be observed.
1., 2., 3...	Series of steps.
	Result of a step.
	Help in the event of a problem.
	Visual inspection.

1.2.6 Symbols in graphics

Symbol	Meaning
1, 2, 3, ...	Item numbers
1., 2., 3., ...	Series of steps
A, B, C, ...	Views
A-A, B-B, C-C, ...	Sections

Symbol	Meaning
	Hazardous area
	Safe area (non-hazardous area)
	Flow direction

1.3 Documentation

For an overview of the scope of the associated Technical Documentation, refer to the following:
- The *W@M Device Viewer* : Enter the serial number from the nameplate (www.endress.com/deviceviewer)
- The *Endress+Hauser Operations App*: Enter the serial number from the nameplate or scan the 2-D matrix code (QR code) on the nameplate.

For a detailed list of the individual documents along with the documentation code → 176

1.3.1 Standard documentation

Document type	Purpose and content of the document
Technical Information	**Planning aid for your device** The document contains all the technical data on the device and provides an overview of the accessories and other products that can be ordered for the device.
Sensor Brief Operating Instructions	**Guides you quickly to the 1st measured value - Part 1** The Sensor Brief Operating Instructions are aimed at specialists with responsibility for installing the measuring device. ▪ Incoming acceptance and product identification ▪ Storage and transport ▪ Installation
Transmitter Brief Operating Instructions	**Guides you quickly to the 1st measured value - Part 2** The Transmitter Brief Operating Instructions are aimed at specialists with responsibility for commissioning, configuring and parameterizing the measuring device (until the first measured value). ▪ Product description ▪ Installation ▪ Electrical connection ▪ Operation options ▪ System integration ▪ Commissioning ▪ Diagnostic information
Description of Device Parameters	**Reference for your parameters** The document provides a detailed explanation of each individual parameter in the Expert operating menu. The description is aimed at those who work with the device over the entire life cycle and perform specific configurations.

1.3.2 Supplementary device-dependent documentation

Additional documents are supplied depending on the device version ordered: Always comply strictly with the instructions in the supplementary documentation. The supplementary documentation is an integral part of the device documentation.

1.4 Registered trademarks

HART®
Registered trademark of the FieldComm Group, Austin, Texas, USA

Microsoft®
Registered trademark of the Microsoft Corporation, Redmond, Washington, USA

2 Basic safety instructions

2.1 Requirements for the personnel

The personnel for installation, commissioning, diagnostics and maintenance must fulfill the following requirements:
- Trained, qualified specialists must have a relevant qualification for this specific function and task.
- Are authorized by the plant owner/operator.
- Are familiar with federal/national regulations.
- Before starting work, read and understand the instructions in the manual and supplementary documentation as well as the certificates (depending on the application).
- Follow instructions and comply with basic conditions.

The operating personnel must fulfill the following requirements:
- Are instructed and authorized according to the requirements of the task by the facility's owner-operator.
- Follow the instructions in this manual.

2.2 Designated use

Application and media
The measuring device described in these Brief Operating Instructions is intended only for flow measurement of liquids with a minimum conductivity of 5 µS/cm.

Depending on the version ordered, the measuring device can also measure potentially explosive, flammable, poisonous and oxidizing media.

Measuring devices for use in hazardous areas, in hygienic applications or where there is an increased risk due to process pressure, are labeled accordingly on the nameplate.

To ensure that the measuring device remains in proper condition for the operation time:
- Keep within the specified pressure and temperature range.
- Only use the measuring device in full compliance with the data on the nameplate and the general conditions listed in the Operating Instructions and supplementary documentation.
- Based on the nameplate, check whether the ordered device is permitted for the intended use in the hazardous area (e.g. explosion protection, pressure vessel safety).
- Use the measuring device only for media to which the process-wetted materials are sufficiently resistant.
- If the measuring device is not operated at atmospheric temperature, compliance with the relevant basic conditions specified in the associated device documentation is absolutely essential: "Documentation" section→ 🖹 8.
- Protect the measuring device permanently against corrosion from environmental influences.

Incorrect use
Non-designated use can compromise safety. The manufacturer is not liable for damage caused by improper or non-designated use.

⚠ WARNING
Danger of breakage due to corrosive or abrasive fluids!
- Verify the compatibility of the process fluid with the sensor material.
- Ensure the resistance of all fluid-wetted materials in the process.
- Keep within the specified pressure and temperature range.

NOTICE

Verification for borderline cases:

- For special fluids and fluids for cleaning, Endress+Hauser is glad to provide assistance in verifying the corrosion resistance of fluid-wetted materials, but does not accept any warranty or liability as minute changes in the temperature, concentration or level of contamination in the process can alter the corrosion resistance properties.

Residual risks

⚠ WARNING

The electronics and the medium may cause the surfaces to heat up. This presents a burn hazard!

- For elevated fluid temperatures, ensure protection against contact to prevent burns.

2.3 Workplace safety

For work on and with the device:

- Wear the required personal protective equipment according to federal/national regulations.

For welding work on the piping:

- Do not ground the welding unit via the measuring device.

If working on and with the device with wet hands:

- Due to the increased risk of electric shock, gloves must be worn.

2.4 Operational safety

Risk of injury.

- Operate the device in proper technical condition and fail-safe condition only.
- The operator is responsible for interference-free operation of the device.

Conversions to the device

Unauthorized modifications to the device are not permitted and can lead to unforeseeable dangers.

- If, despite this, modifications are required, consult with Endress+Hauser.

Repair

To ensure continued operational safety and reliability,

- Carry out repairs on the device only if they are expressly permitted.
- Observe federal/national regulations pertaining to repair of an electrical device.
- Use original spare parts and accessories from Endress+Hauser only.

2.5 Product safety

This measuring device is designed in accordance with good engineering practice to meet state-of-the-art safety requirements, has been tested, and left the factory in a condition in which it is safe to operate.

It meets general safety standards and legal requirements. It also complies with the EU directives listed in the device-specific EU Declaration of Conformity. Endress+Hauser confirms this by affixing the CE mark to the device.

2.6 IT security

We only provide a warranty if the device is installed and used as described in the Operating Instructions. The device is equipped with security mechanisms to protect it against any inadvertent changes to the device settings.

IT security measures in line with operators' security standards and designed to provide additional protection for the device and device data transfer must be implemented by the operators themselves.

2.7 Device-specific IT security

The device offers a range of specific functions to support protective measures on the operator's side. These functions can be configured by the user and guarantee greater in-operation safety if used correctly. An overview of the most important functions is provided in the following section.

2.7.1 Protecting access via hardware write protection

Write access to the device parameters via the local display or operating tool (e.g. FieldCare, DeviceCare) can be disabled via a write protection switch (DIP switch on the motherboard). When hardware write protection is enabled, only read access to the parameters is possible.

2.7.2 Protecting access via a password

Different passwords are available to protect write access to the device parameters or access to the device via the WLAN interface.

- User-specific access code
  Protect write access to the device parameters via the local display, Web browser or operating tool (e.g. FieldCare, DeviceCare). Access authorization is clearly regulated through the use of a user-specific access code.
- WLAN passphrase
  The network key protects a connection between an operating unit (e.g. notebook or tablet) and the device via the WLAN interface which can be ordered as an option.

User-specific access code

Write access to the device parameters via the local display or operating tool (e.g. FieldCare, DeviceCare) can be protected by the modifiable, user-specific access code (→ 🖹 111).

When the device is delivered, the device does not have an access code and is equivalent to *0000* (open).

WLAN passphrase

A connection between an operating unit (e.g. notebook or tablet) and the device via the WLAN interface (→ 🖹 72) which can be ordered as an option is protected by the network key. The WLAN authentication of the network key complies with the IEEE 802.11 standard.

When the device is delivered, the network key is pre-defined depending on the device. It can be changed via the **WLAN settings** submenu in the **WLAN passphrase** parameter (→ 🖹 106).

General notes on the use of passwords

- The access code and network key supplied with the device should be changed during commissioning.
- Follow the general rules for generating a secure password when defining and managing the access code or network key.
- The user is responsible for the management and careful handling of the access code and network key.
- For information on configuring the access code or on what to do if you lose the password, see the "Write protection via access code" section → 111

2.7.3 Access via fieldbus

When communicating via fieldbus, access to the device parameters can be restricted to *"Read only"* access. The option can be changed in the **Fieldbus writing access** parameter.

This does not affect cyclic measured value transmission to the higher-order system, which is always guaranteed.

For detailed information, see the "Description of Device Parameters" document pertaining to the device → 176

2.7.4 Access via Web server

The device can be operated and configured via a Web browser with the integrated Web server (→ 65). The connection is via the service interface (CDI-RJ45) or the WLAN interface.

The Web server is enabled when the device is delivered. The Web server can be disabled if necessary (e.g. after commissioning) via the **Web server functionality** parameter.

The device and status information can be hidden on the login page. This prevents unauthorized access to the information.

For detailed information, see the "Description of Device Parameters" document pertaining to the device → 176

3 Product description

The device consists of a transmitter and a sensor.

Two device versions are available:
- Compact version – transmitter and sensor form a mechanical unit.
- Remote version - transmitter and sensor are mounted in separate locations.

3.1 Product design

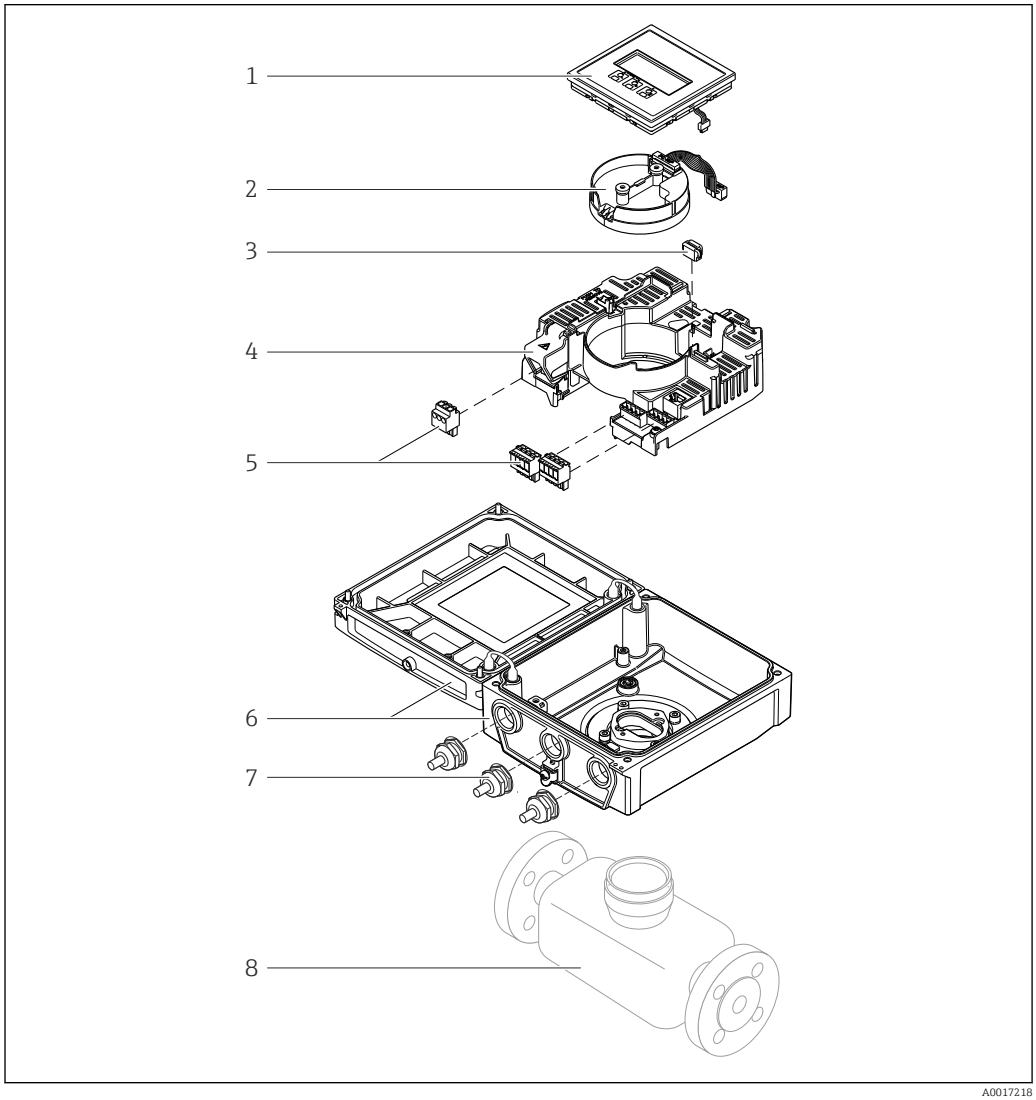

1 Important components of the compact version

1 Display module
2 Smart sensor electronics module
3 HistoROM DAT (plug-in memory)
4 Main electronics module
5 Terminals (screw terminals, some available as plug-in terminals) or fieldbus connectors
6 Transmitter housing, compact version
7 Cable glands
8 Sensor, compact version

4 Incoming acceptance and product identification

4.1 Incoming acceptance

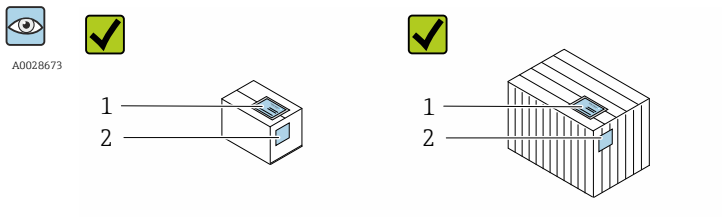

Are the order codes on the delivery note (1) and the product sticker (2) identical?

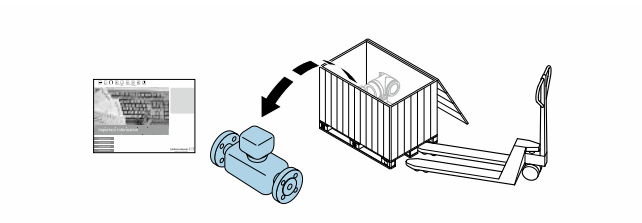

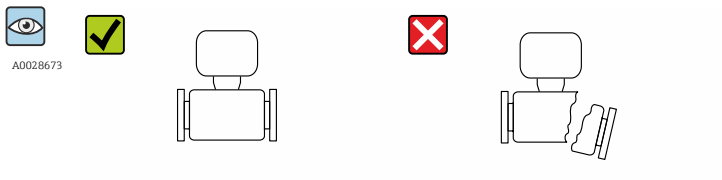

Are the goods undamaged?

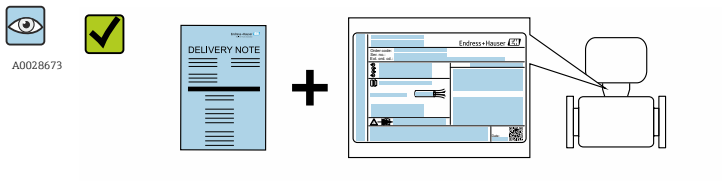

Do the nameplate data match the ordering information on the delivery note?

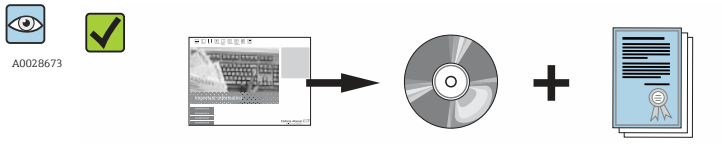

Is the CD-ROM with the Technical Documentation (depends on device version) and documents present?

- If one of the conditions is not satisfied, contact your Endress+Hauser Sales Center.
- Depending on the device version, the CD-ROM might not be part of the delivery! The Technical Documentation is available via the Internet or via the *Endress+Hauser Operations App*, see the "Product identification" section → 16.

4.2 Product identification

The following options are available for identification of the measuring device:
- Nameplate specifications
- Order code with breakdown of the device features on the delivery note
- Enter serial numbers from nameplates in *W@M Device Viewer* (www.endress.com/deviceviewer): All information about the measuring device is displayed.
- Enter the serial number from the nameplates into the *Endress+Hauser Operations App* or scan the 2-D matrix code (QR code) on the nameplate with the *Endress+Hauser Operations App*: all the information for the measuring device is displayed.

For an overview of the scope of the associated Technical Documentation, refer to the following:
- The chapters "Additional standard documentation on the device" → 8 and "Supplementary device-dependent documentation" → 8
- The *W@M Device Viewer*: Enter the serial number from the nameplate (www.endress.com/deviceviewer)
- The *Endress+Hauser Operations App*: Enter the serial number from the nameplate or scan the 2-D matrix code (QR code) on the nameplate.

4.2.1 Transmitter nameplate

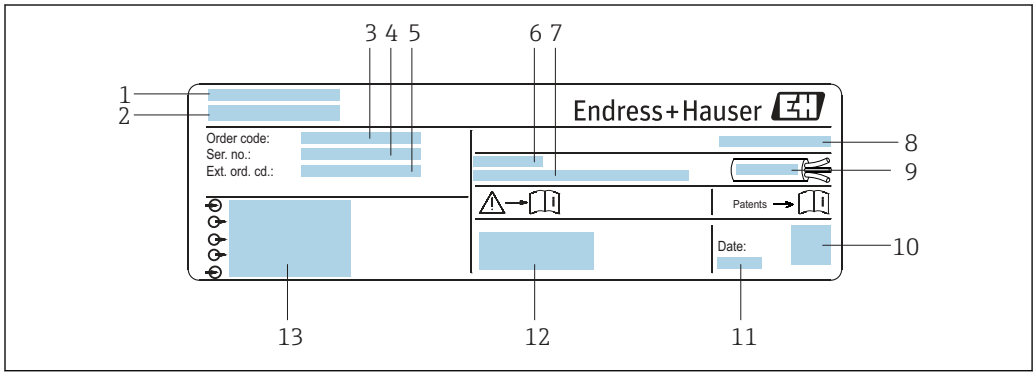

2 *Example of a transmitter nameplate*

1 *Manufacturing location*
2 *Name of the transmitter*
3 *Order code*
4 *Serial number (ser. no.)*
5 *Extended order code (Ext. ord. cd.)*
6 *Permitted ambient temperature (T_a)*
7 *Firmware version (FW) and device revision (Dev.Rev.) from the factory*
8 *Degree of protection*
9 *Permitted temperature range for cable*
10 *2-D matrix code*
11 *Manufacturing date: year-month*
12 *CE mark, C-Tick*
13 *Electrical connection data, e.g. available inputs and outputs, supply voltage*

4.2.2 Sensor nameplate

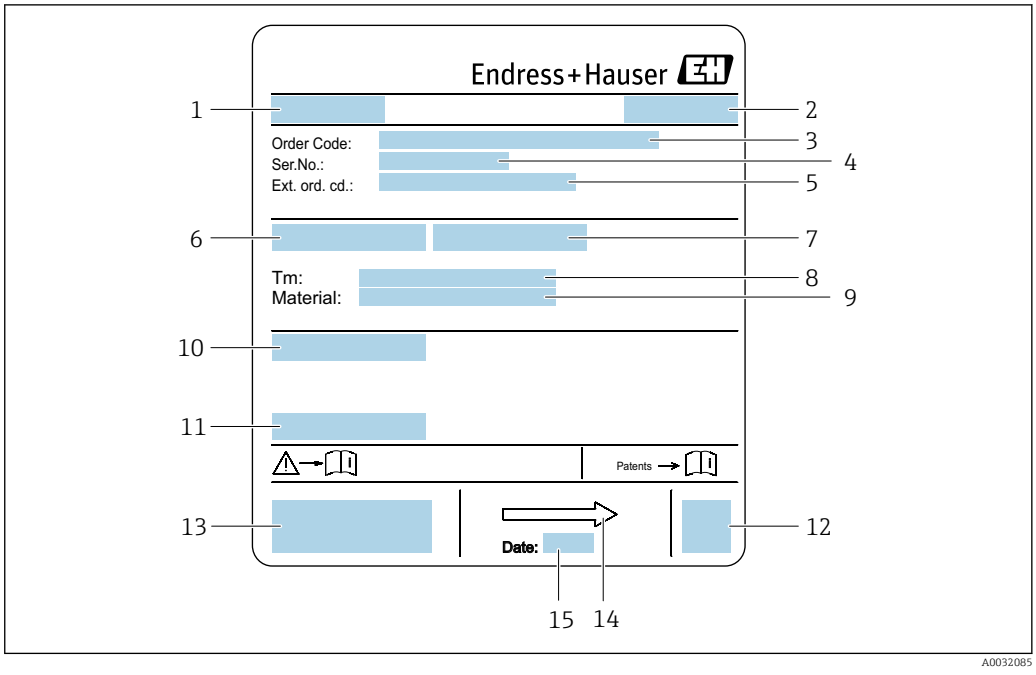

3 *Example of sensor nameplate*

1 *Name of the sensor*
2 *Manufacturing location*
3 *Order code*
4 *Serial number (ser. no.)*
5 *Extended order code (Ext. ord. cd.)*
6 *Nominal diameter of sensor*
7 *Test pressure of the sensor*
8 *Medium temperature range*
9 *Material of lining and electrodes*
10 *Degree of protection: e.g. IP, NEMA*
11 *Permitted ambient temperature (T_a)*
12 *2-D matrix code*
13 *CE mark, C-Tick*
14 *Flow direction*
15 *Manufacturing date: year-month*

Order code
The measuring device is reordered using the order code.

Extended order code
- The device type (product root) and basic specifications (mandatory features) are always listed.
- Of the optional specifications (optional features), only the safety and approval-related specifications are listed (e.g. LA). If other optional specifications are also ordered, these are indicated collectively using the # placeholder symbol (e.g. #LA#).
- If the ordered optional specifications do not include any safety and approval-related specifications, they are indicated by the + placeholder symbol (e.g. XXXXXX-ABCDE +).

4.2.3 Symbols on measuring device

Symbol	Meaning
	**WARNING!** This symbol alerts you to a dangerous situation. Failure to avoid this situation can result in serious or fatal injury.
	**Reference to documentation** Refers to the corresponding device documentation.
	**Protective ground connection** A terminal which must be connected to ground prior to establishing any other connections.

5 Storage and transport

5.1 Storage conditions

Observe the following notes for storage:
- Store in the original packaging to ensure protection from shock.
- Do not remove protective covers or protective caps installed on process connections. They prevent mechanical damage to the sealing surfaces and contamination in the measuring tube.
- Protect from direct sunlight to avoid unacceptably high surface temperatures.
- Select a storage location where moisture cannot collect in the measuring device as fungus and bacteria infestation can damage the lining.
- Store in a dry and dust-free place.
- Do not store outdoors.

Storage temperature→ 155

5.2 Transporting the product

Transport the measuring device to the measuring point in the original packaging.

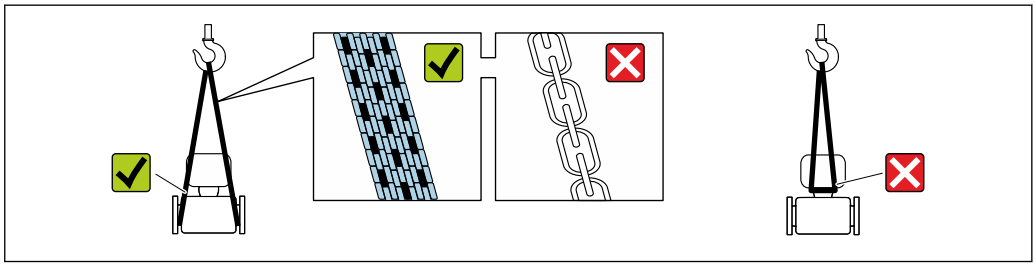

A0029252

Do not remove protective covers or caps installed on process connections. They prevent mechanical damage to the sealing surfaces and contamination in the measuring tube.

5.2.1 Measuring devices without lifting lugs

WARNING

Center of gravity of the measuring device is higher than the suspension points of the webbing slings.

Risk of injury if the measuring device slips.
- Secure the measuring device against slipping or turning.
- Observe the weight specified on the packaging (stick-on label).

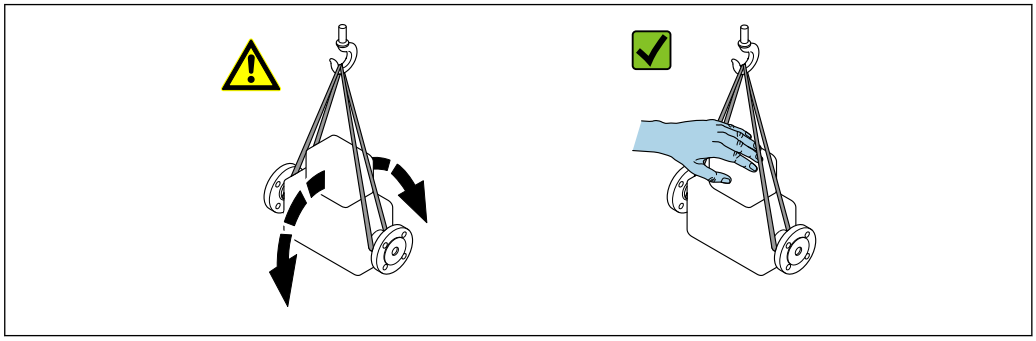

A0029214

5.2.2 Measuring devices with lifting lugs

⚠ CAUTION

Special transportation instructions for devices with lifting lugs

- ▶ Only use the lifting lugs fitted on the device or flanges to transport the device.
- ▶ The device must always be secured at two lifting lugs at least.

5.2.3 Transporting with a fork lift

If transporting in wood crates, the floor structure enables the crates to be lifted lengthwise or at both sides using a forklift.

⚠ CAUTION

Risk of damaging the magnetic coil

- ▶ If transporting by forklift, do not lift the sensor by the metal casing.
- ▶ This would buckle the casing and damage the internal magnetic coils.

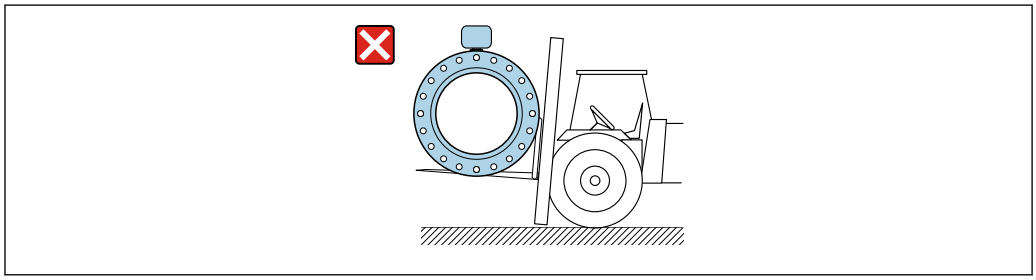

A0029319

5.3 Packaging disposal

All packaging materials are environmentally friendly and 100% recyclable:

- Measuring device secondary packaging: polymer stretch film that conforms to EC Directive 2002/95/EC (RoHS).
- Packaging:
  - Wood crate, treated in accordance with ISPM 15 standard, which is confirmed by the affixed IPPC logo.
    or
  - Carton in accordance with European Packaging Directive 94/62EC; recyclability is confirmed by the affixed RESY symbol.
- Seaworthy packaging (optional): Wood crate, treated in accordance with ISPM 15 standard, which is confirmed by the affixed IPPC logo.
- Carrying and mounting hardware:
  - Disposable plastic pallet
  - Plastic straps
  - Plastic adhesive strips
- Dunnage: Paper cushion

6 Installation

6.1 Installation conditions

6.1.1 Mounting position

Mounting location

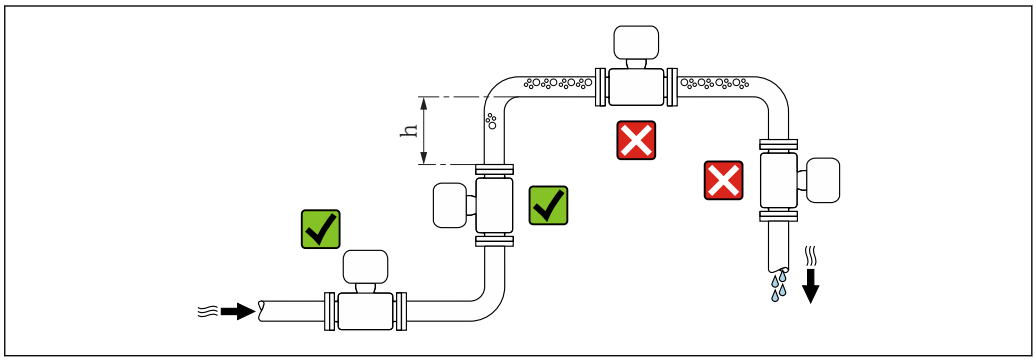

Preferably install the sensor in an ascending pipe, and ensure a sufficient distance to the next pipe elbow: h ≥ 2 × DN

Installation in down pipes

Install a siphon with a vent valve downstream of the sensor in down pipes whose length h ≥ 5 m (16.4 ft). This precaution is to avoid low pressure and the consequent risk of damage to the measuring tube. This measure also prevents the system losing prime.

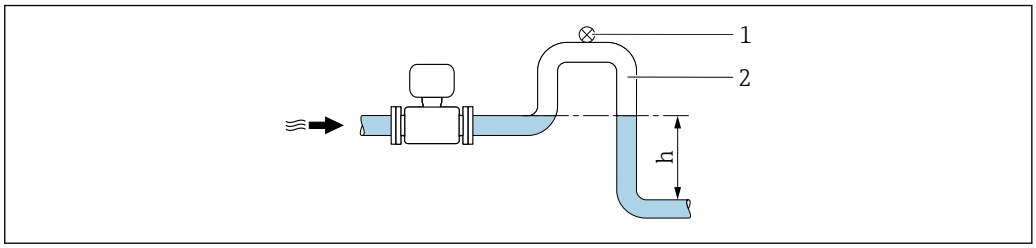

4 *Installation in a down pipe*

1 Vent valve
2 Pipe siphon
h Length of down pipe

Installation in partially filled pipes

A partially filled pipe with a gradient necessitates a drain-type configuration.

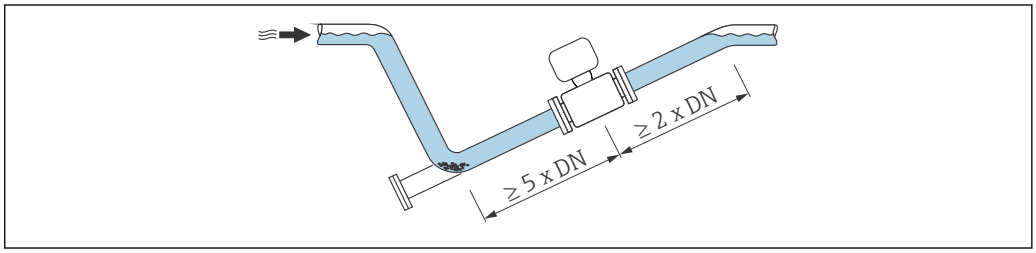

For heavy sensors DN ≥ 350 (14")

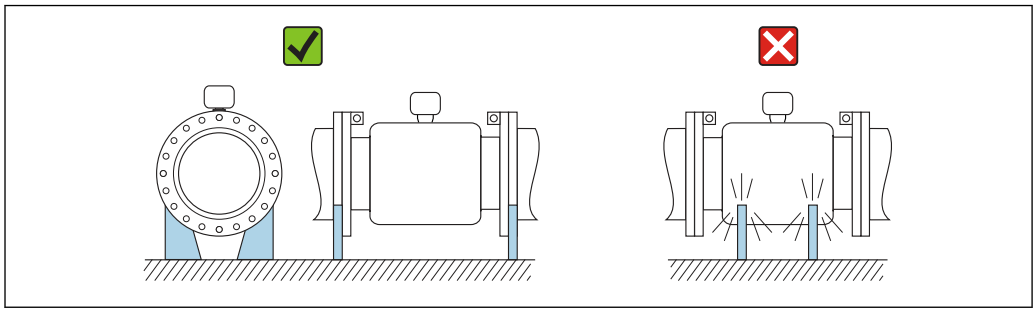

A0016276

Orientation

The direction of the arrow on the sensor nameplate helps you to install the sensor according to the flow direction (direction of medium flow through the piping).

Orientation			Recommendation
A	Vertical orientation	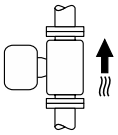 A0015591	✓✓
B	Horizontal orientation, transmitter at top	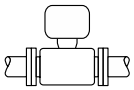 A0015589	✓✓ 1)
C	Horizontal orientation, transmitter at bottom	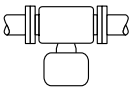 A0015590	✓✓ 2) 3)
D	Horizontal orientation, transmitter at side	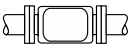 A0015592	✗

1) Applications with low process temperatures may decrease the ambient temperature. To maintain the minimum ambient temperature for the transmitter, this orientation is recommended.
2) Applications with high process temperatures may increase the ambient temperature. To maintain the maximum ambient temperature for the transmitter, this orientation is recommended.
3) To prevent the electronics module from overheating in the case of a sharp rise in temperature (e.g. CIP- or SIP processes), install the device with the transmitter component pointing downwards.

Horizontal

- Ideally, the measuring electrode plane should be horizontal. This prevents brief insulation of the two measuring electrodes by entrained air bubbles.
- Empty pipe detection only works if the transmitter housing is pointing upwards as otherwise there is no guarantee that the empty pipe detection function will actually respond to a partially filled or empty measuring tube.

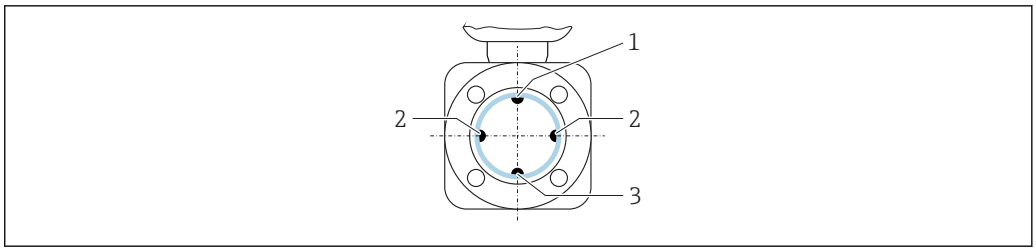

1 EPD electrode for empty pipe detection
2 Measuring electrodes for signal detection
3 Reference electrode for potential equalization

Inlet and outlet runs

If possible, install the sensor upstream from fittings such as valves, T-pieces or elbows.

Observe the following inlet and outlet runs to comply with accuracy specifications:

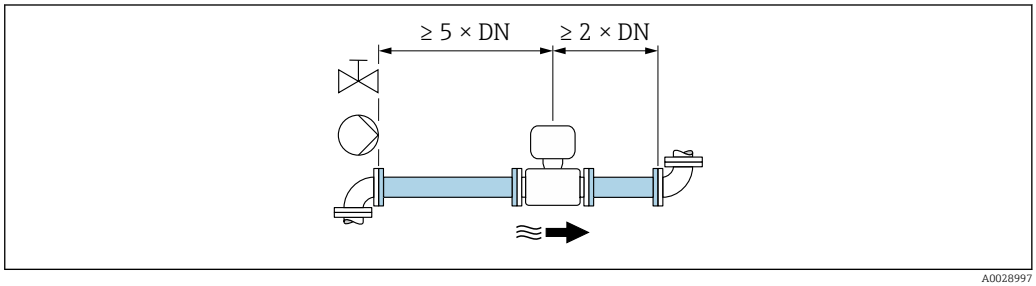

5 *Order code for "Design", option A "Insertion length short, ISO/DVGW until DN400, DN450-2000 1:1" and order code for "Design", option B "Insertion length long, ISO/DVGW until DN400, DN450-2000 1:1.3"*

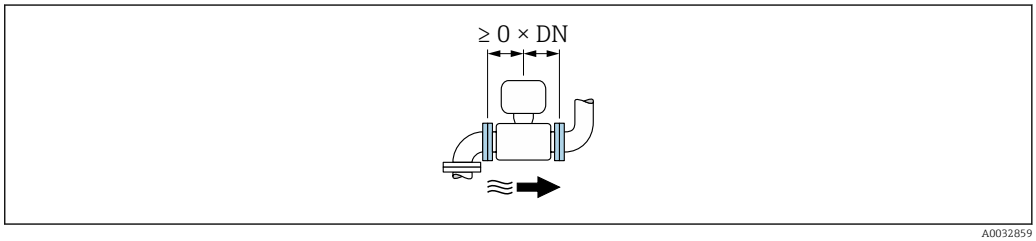

6 *Order code for "Design", option C "Insertion length short ISO/DVGW until DN300, w/o inlet and outlet runs, constricted meas.tube"*

Installation dimensions

For the dimensions and installation lengths of the device, see the "Technical Information" document, "Mechanical construction" section.

6.1.2 Requirements from environment and process

Ambient temperature range

Transmitter	−40 to +60 °C (−40 to +140 °F)
Local display	−20 to +60 °C (−4 to +140 °F), the readability of the display may be impaired at temperatures outside the temperature range.
Sensor	▪ Process connection material, carbon steel: −10 to +60 °C (+14 to +140 °F) ▪ Process connection material, stainless steel: −40 to +60 °C (−40 to +140 °F)
Liner	Do not exceed or fall below the permitted temperature range of the liner .

If operating outdoors:
- Install the measuring device in a shady location.
- Avoid direct sunlight, particularly in warm climatic regions.
- Avoid direct exposure to weather conditions.
- If the compact version of the device is insulated at low temperatures, the insulation must also include the device neck.
- Protect the display against impact.
- Protect the display from abrasion by sand in desert areas.

You can order a display guard from Endress+Hauser : → 143

Temperature tables

Observe the interdependencies between the permitted ambient and fluid temperatures when operating the device in hazardous areas.

For detailed information on the temperature tables, see the separate document entitled "Safety Instructions" (XA) for the device.

System pressure

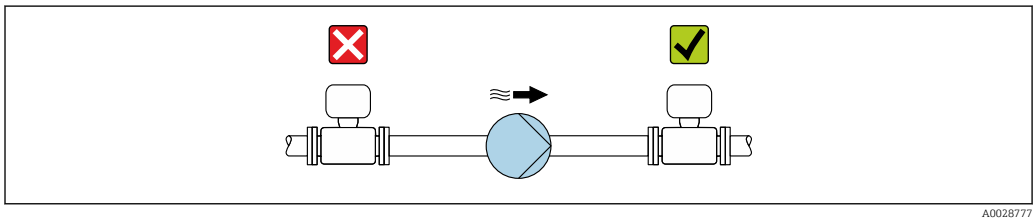

Never install the sensor on the pump suction side in order to avoid the risk of low pressure, and thus damage to the liner.

Furthermore, install pulse dampers if reciprocating, diaphragm or peristaltic pumps are used.

- Information on the liner's resistance to partial vacuum → 156
- Information on the shock resistance of the measuring system → 156
- Information on the vibration resistance of the measuring system → 155

Vibrations

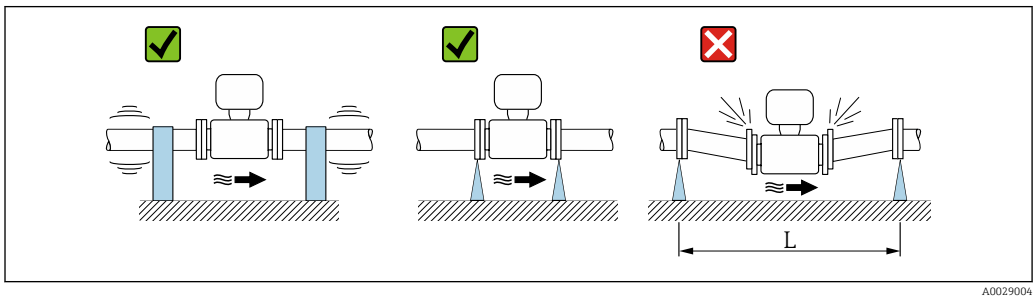

7 *Measures to avoid device vibrations (L > 10 m (33 ft))*

In the event of very strong vibrations, the pipe and sensor must be supported and fixed.

It is also advisable to mount the sensor and transmitter separately.

- Information on the shock resistance of the measuring system → 156
- Information on the vibration resistance of the measuring system → 155

Adapters

Suitable adapters to DIN EN 545 (double-flange reducers) can be used to install the sensor in larger-diameter pipes. The resultant increase in the rate of flow improves measuring accuracy with very slow-moving fluids. The nomogram shown here can be used to calculate the pressure loss caused by reducers and expanders.

The nomogram only applies to liquids with a viscosity similar to that of water.

1. Calculate the ratio of the diameters d/D.
2. From the nomogram read off the pressure loss as a function of flow velocity (downstream from the reduction) and the d/D ratio.

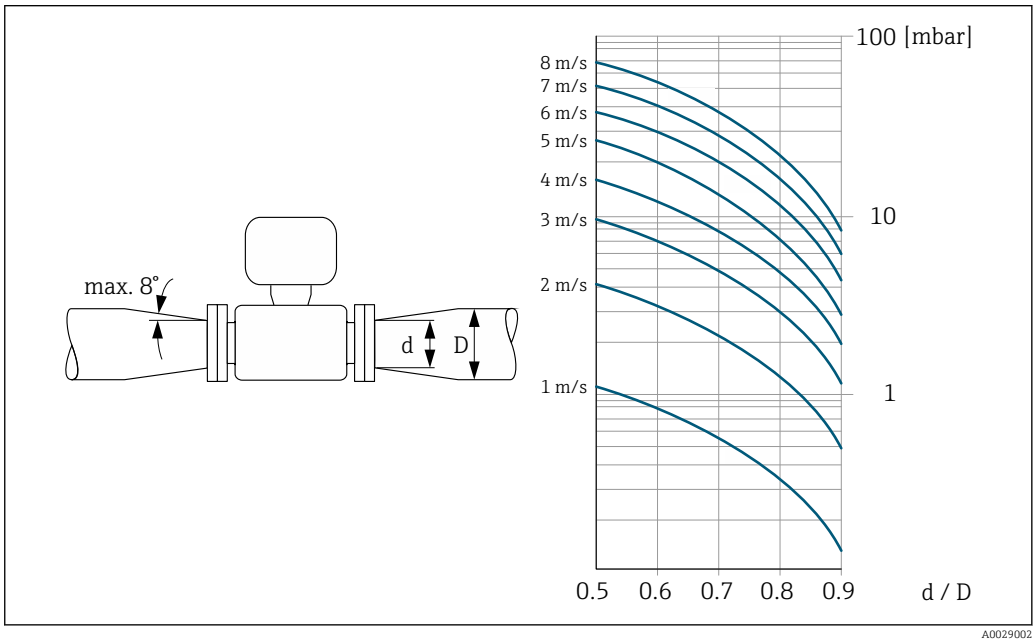

Length of connecting cable

To ensure correct measuring results when using the remote version, observe the maximum permitted length of the connecting cable L_{max}. This length is determined by the conductivity of the fluid.
If measuring liquids in general: 5 µS/cm

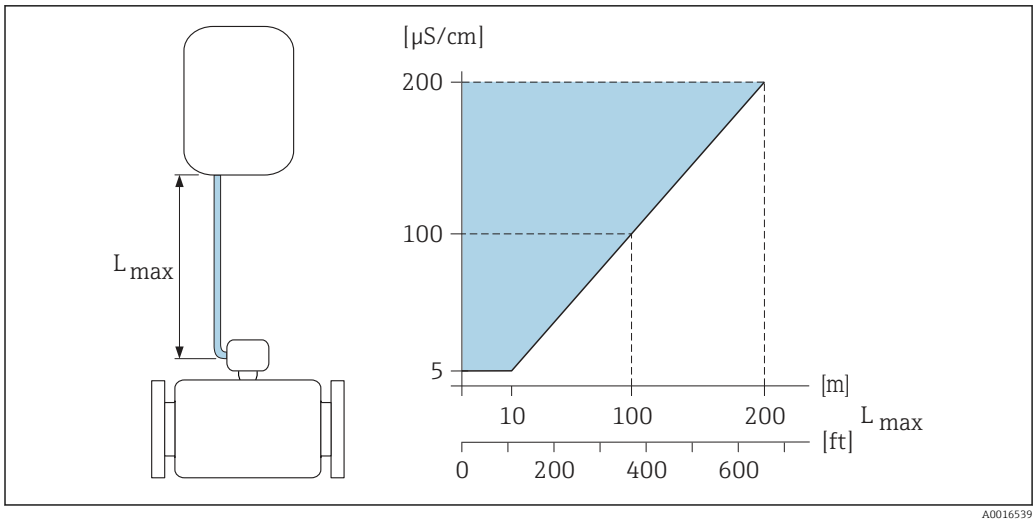

8 *Permitted length of connecting cable for remote version*

Colored area = permitted range
L_{max} = length of connecting cable in [m] ([ft])
[µS/cm] = fluid conductivity

6.1.3 Special mounting instructions

Display protection

- To ensure that the optional display protection can be easily opened, maintain the following minimum head clearance: 350 mm (13.8 in)

Temporary immersion in water

A remote version with IP67 protection, Type 6 is optionally available for temporary immersion in water for up to 168 hours at ≤ 3 m (10 ft) or in exceptional cases for use for up to 48 hours at ≤ 10 m (30 ft).

Compared with the standard degree of protection IP67, Type 4X enclosure, the version IP67, Type 6 enclosure has been designed to withstand short-term or temporary flooding.

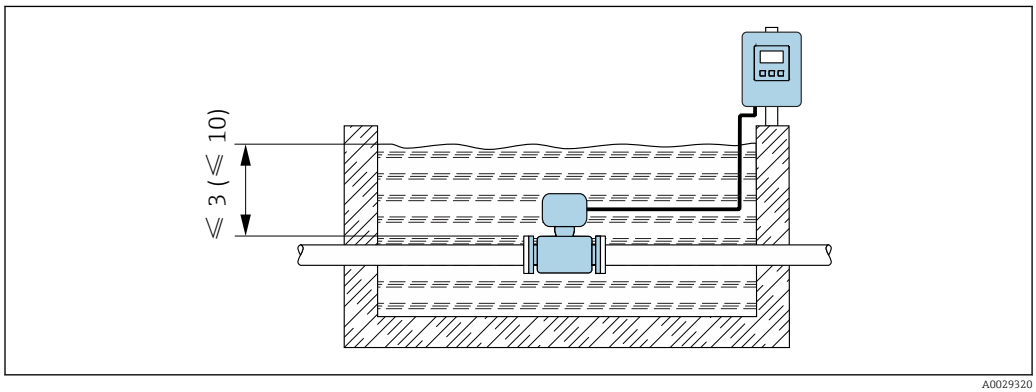

9 *Engineering unit in m(ft)*

Replacement of cable gland on connection housing

6.2 Mounting the measuring device

6.2.1 Required tools

For transmitter

- Torque wrench
- For wall mounting:
  Open-ended wrench for hexagonal screw max. M5
- For pipe mounting:
  - Open-ended wrench AF 8
  - Phillips head screwdriver PH 2
- For turning the transmitter housing (compact version):
  - Phillips head screwdriver PH 2
  - Torx screwdriver TX 20
  - Open-ended wrench AF 7

For sensor

For flanges and other process connections: Corresponding mounting tools

6.2.2 Preparing the measuring device

1. Remove all remaining transport packaging.
2. Remove any protective covers or protective caps present from the sensor.
3. Remove stick-on label on the electronics compartment cover.

6.2.3 Mounting the sensor

⚠ WARNING

Danger due to improper process sealing!

- ▶ Ensure that the inside diameters of the gaskets are greater than or equal to that of the process connections and piping.
- ▶ Ensure that the gaskets are clean and undamaged.
- ▶ Install the gaskets correctly.

1. Ensure that the direction of the arrow on the sensor matches the flow direction of the medium.
2. To ensure compliance with device specifications, install the measuring device between the pipe flanges in a way that it is centered in the measurement section.
3. If using ground disks, comply with the Installation Instructions provided.
4. Observe required screw tightening torques → 28.
5. Install the measuring device or turn the transmitter housing so that the cable entries do not point upwards.

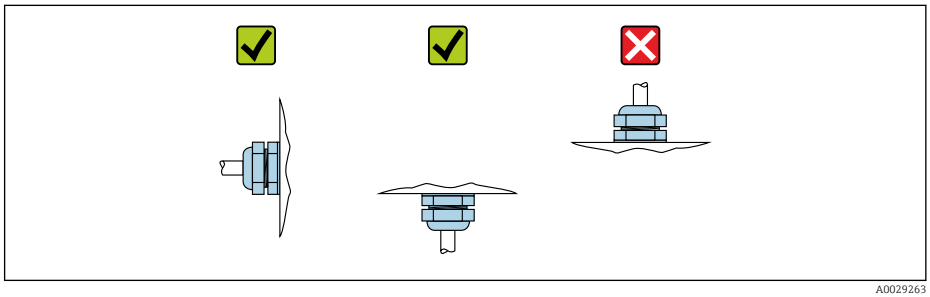

A0029263

Mounting the seals

⚠ CAUTION

An electrically conductive layer could form on the inside of the measuring tube!
Risk of measuring signal short circuit.
► Do not use electrically conductive sealing compounds such as graphite.

Comply with the following instructions when installing seals:

1. Make sure that the seals do not protrude into the piping cross-section.
2. For DIN flanges: only use seals according to DIN EN 1514-1.
3. For "hard rubber" lining: additional seals are **always** required.
4. For "polyurethane" lining: generally additional seals are **not** required.
5. For "PTFE" lining: generally additional seals are **not** required.

Mounting the ground cable/ground disks

Comply with the information on potential equalization and detailed mounting instructions for the use of ground cables/ground disks .

Screw tightening torques

Please note the following:
- The screw tightening torques listed below apply only to lubricated threads and to pipes not subjected to tensile stress.
- Tighten the screws uniformly and in diagonally opposite sequence.
- Overtightening the screws will deform the sealing faces or damage the seals.

Screw tightening torques for EN 1092-1 (DIN 2501), PN 6/10/16

Nominal diameter [mm]	Pressure rating [bar]	Screws [mm]	Flange thickness [mm]	Max. screw tightening torque [Nm]		
				Hard rubber	Polyurethane	PTFE
25	PN 10/16	4 × M12	18	–	6	11
32	PN 10/16	4 × M16	18	–	16	27
40	PN 10/16	4 × M16	18	–	16	29
50	PN 10/16	4 × M16	18	–	15	40
65 [1)]	PN 10/16	8 × M16	18	–	10	22
80	PN 10/16	8 × M16	20	–	15	30
100	PN 10/16	8 × M16	20	–	20	42
125	PN 10/16	8 × M16	22	–	30	55
150	PN 10/16	8 × M20	22	–	50	90
200	PN 16	12 × M20	24	–	65	87
250	PN 16	12 × M24	26	–	126	151
300	PN 16	12 × M24	28	–	139	177
350	PN 6	12 × M20	22	111	120	–
350	PN 10	16 × M20	26	112	118	–
350	PN 16	16 × M24	30	152	165	–
400	PN 6	16 × M20	22	90	98	–
400	PN 10	16 × M24	26	151	167	–
400	PN 16	16 × M27	32	193	215	–
450	PN 6	16 × M20	22	112	126	–

Nominal diameter [mm]	Pressure rating [bar]	Screws [mm]	Flange thickness [mm]	Max. screw tightening torque [Nm]		
				Hard rubber	Polyurethane	PTFE
450	PN 10	20 × M24	28	153	133	–
500	PN 6	20 × M20	24	119	123	–
500	PN 10	20 × M24	28	155	171	–
500	PN 16	20 × M30	34	275	300	–
600	PN 6	20 × M24	30	139	147	–
600	PN 10	20 × M27	28	206	219	–
600 [1)]	PN 16	20 × M33	36	415	443	–
700	PN 6	24 × M24	24	148	139	–
700	PN 10	24 × M27	30	246	246	–
700	PN 16	24 × M33	36	278	318	–
800	PN 6	24 × M27	24	206	182	–
800	PN 10	24 × M30	32	331	316	–
800	PN 16	24 × M36	38	369	385	–
900	PN 6	24 × M27	26	230	637	–
900	PN 10	28 × M30	34	316	307	–
900	PN 16	28 × M36	40	353	398	–
1000	PN 6	28 × M27	26	218	208	–
1000	PN 10	28 × M33	34	402	405	–
1000	PN 16	28 × M39	42	502	518	–
1200	PN 6	32 × M30	28	319	299	–
1200	PN 10	32 × M36	38	564	568	–
1200	PN 16	32 × M45	48	701	753	–
1400	PN 6	36 × M33	32	430	–	–
1400	PN 10	36 × M39	42	654	–	–
1400	PN 16	36 × M45	52	729	–	–
1600	PN 6	40 × M33	34	440	–	–
1600	PN 10	40 × M45	46	946	–	–
1600	PN 16	40 × M52	58	1007	–	–
1800	PN 6	44 × M36	36	547	–	–
1800	PN 10	44 × M45	50	961	–	–
1800	PN 16	44 × M52	62	1108	–	–
2000	PN 6	48 × M39	38	629	–	–
2000	PN 10	48 × M45	54	1047	–	–
2000	PN 16	48 × M56	66	1324	–	–
2200	PN 6	52 × M39	42	698	–	–
2200	PN 10	52 × M52	58	1217	–	–
2400	PN 6	56 × M39	44	768	–	–
2400	PN 10	56 × M52	62	1229	–	–

1) Designed acc. to EN 1092-1 (not to DIN 2501)

Screw tightening torques for EN 1092-1 (DIN 2501), PN 10/16/25, P245GH/stainless; calculated according to EN 1591-1:2014 for flanges as per EN 1092-1:2013

Nominal diameter	Pressure rating	Screws	Flange thickness	Nom. screw tightening torque [Nm]	
[mm]	[bar]	[mm]	[mm]	PUR	HG
350	PN 6	12 × M20	22	75	60
350	PN 10	16 × M20	26	80	70
350	PN 16	16 × M24	30	135	125
400	PN 6	16 × M20	22	70	65
400	PN 10	16 × M24	26	120	100
400	PN 16	16 × M27	32	190	175
450	PN 6	16 × M20	22	90	70
450	PN 10	20 × M24	28	110	100
450	PN 16	20 × M27	34	190	175
500	PN 6	20 × M20	24	70	65
500	PN 10	20 × M24	28	120	110
500	PN 16	20 × M30	36	235	225
600	PN 6	20 × M24	30	105	105
600	PN 10	20 × M27	30	160	165
600	PN 16	20 × M33	40	340	340
700	PN 6	24 × M24	30	110	110
700	PN 10	24 × M27	35	190	190
700	PN 16	24 × M33	40	340	340
800	PN 6	24 × M27	30	145	145
800	PN 10	24 × M30	38	260	260
800	PN 16	24 × M36	41	455	465
900	PN 6	24 × M27	34	180	170
900	PN 10	28 × M30	38	275	265
900	PN 16	28 × M36	48	475	475
1000	PN 6	28 × M27	38	185	175
1000	PN 10	28 × M33	44	360	350
1000	PN 16	28 × M39	59	620	630
1200	PN 6	32 × M30	42	250	235
1200	PN 10	32 × M36	55	480	470
1200	PN 16	32 × M45	78	900	890
1400	PN 6	36 × M33	56	–	300
1400	PN 10	36 × M39	65	–	600
1400	PN 16	36 × M45	84	–	1050
1600	PN 6	40 × M33	63	–	340
1600	PN 10	40 × M45	75	–	810
1600	PN 16	40 × M52	102	–	1420
1800	PN 6	44 × M36	69	–	430
1800	PN 10	44 × M45	85	–	920
1800	PN 16	44 × M52	110	–	1600

Nominal diameter	Pressure rating	Screws	Flange thickness	Nom. screw tightening torque [Nm]	
[mm]	[bar]	[mm]	[mm]	PUR	HG
2 000	PN 6	48 × M39	74	–	530
2 000	PN 10	48 × M45	90	–	1 040
2 000	PN 16	48 × M56	124	–	1 900
2 200	PN 6	52 × M39	81	–	580
2 200	PN 10	52 × M52	100	–	1 290
2 400	PN 6	56 × M39	87	–	650
2 400	PN 10	56 × M52	110	–	1 410

Screw tightening torques for ASME B16.5, Class 150

Nominal diameter		Screws	Max. screw tightening torque [Nm] ([lbf · ft])		
[mm]	[in]	[in]	Hard rubber	Polyurethane	PTFE
25	1	4 × 5/8	–	5 (4)	14 (13)
40	1 ½	8 × 5/8	–	10 (7)	21 (15)
50	2	4 × 5/8	–	15 (11)	40 (29)
80	3	4 × 5/8	–	25 (18)	65 (48)
100	4	8 × 5/8	–	20 (15)	44 (32)
150	6	8 × ¾	–	45 (33)	90 (66)
200	8	8 × ¾	–	65 (48)	87 (64)
250	10	12 × 7/8	–	126 (93)	151 (112)
300	12	12 × 7/8	–	146 (108)	177 (131)
350	14	12 × 1	135 (100)	158 (117)	–
400	16	16 × 1	128 (94)	150 (111)	–
450	18	16 × 1 1/8	204 (150)	234 (173)	–
500	20	20 × 1 1/8	183 (135)	217 (160)	–
600	24	20 × 1 ¼	268 (198)	307 (226)	–

Screw tightening torques for AWWA C207, Class D

Nominal diameter		Screws	Max. screw tightening torque [Nm] ([lbf · ft])		
[mm]	[in]	[in]	Hard rubber	Polyurethane	PTFE
700	28	28 × 1 ¼	247 (182)	292 (215)	–
750	30	28 × 1 ¼	287 (212)	302 (223)	–
800	32	28 × 1 ½	394 (291)	422 (311)	–
900	36	32 × 1 ½	419 (309)	430 (317)	–
1 000	40	36 × 1 ½	420 (310)	477 (352)	–
1 050	42	36 × 1 ½	528 (389)	518 (382)	–
1 200	48	44 × 1 ½	552 (407)	531 (392)	–
1 350	54	44 × 1 ¾	730 (538)	–	–
1 500	60	52 × 1 ¾	758 (559)	–	–
1 650	66	52 × 1 ¾	946 (698)	–	–
1 800	72	60 × 1 ¾	975 (719)	–	–

Nominal diameter		Screws	Max. screw tightening torque [Nm] ([lbf · ft])		
[mm]	[in]	[in]	Hard rubber	Polyurethane	PTFE
2 000	78	64 × 2	853 (629)	–	–
2 150	84	64 × 2	931 (687)	–	–
2 300	90	68 × 2 ¼	1 048 (773)	–	–

Screw tightening torques for AS 2129, Table E

Nominal diameter	Screws	Max. screw tightening torque [Nm]		
[mm]	[mm]	Hard rubber	Polyurethane	PTFE
350	12 × M24	203	–	–
400	12 × M24	226	–	–
450	16 × M24	226	–	–
500	16 × M24	271	–	–
600	16 × M30	439	–	–
700	20 × M30	355	–	–
750	20 × M30	559	–	–
800	20 × M30	631	–	–
900	24 × M30	627	–	–
1 000	24 × M30	634	–	–
1 200	32 × M30	727	–	–

Screw tightening torques for AS 4087, PN 16

Nominal diameter	Screws	Max. screw tightening torque [Nm]		
[mm]	[mm]	Hard rubber	Polyurethane	PTFE
350	12 × M24	203	–	–
375	12 × M24	137	–	–
400	12 × M24	226	–	–
450	12 × M24	301	–	–
500	16 × M24	271	–	–
600	16 × M27	393	–	–
700	20 × M27	330	–	–
750	20 × M30	529	–	–
800	20 × M33	631	–	–
900	24 × M33	627	–	–
1 000	24 × M33	595	–	–
1 200	32 × M33	703	–	–

6.2.4 Mounting the transmitter of the remote version

⚠ CAUTION

Ambient temperature too high!

Danger of electronics overheating and housing deformation.

- ▶ Do not exceed the permitted maximum ambient temperature .
- ▶ If operating outdoors: Avoid direct sunlight and exposure to weathering, particularly in warm climatic regions.

⚠ CAUTION

Excessive force can damage the housing!

▶ Avoid excessive mechanical stress.

The transmitter of the remote version can be mounted in the following ways:
- Wall mounting
- Pipe mounting

Wall mounting

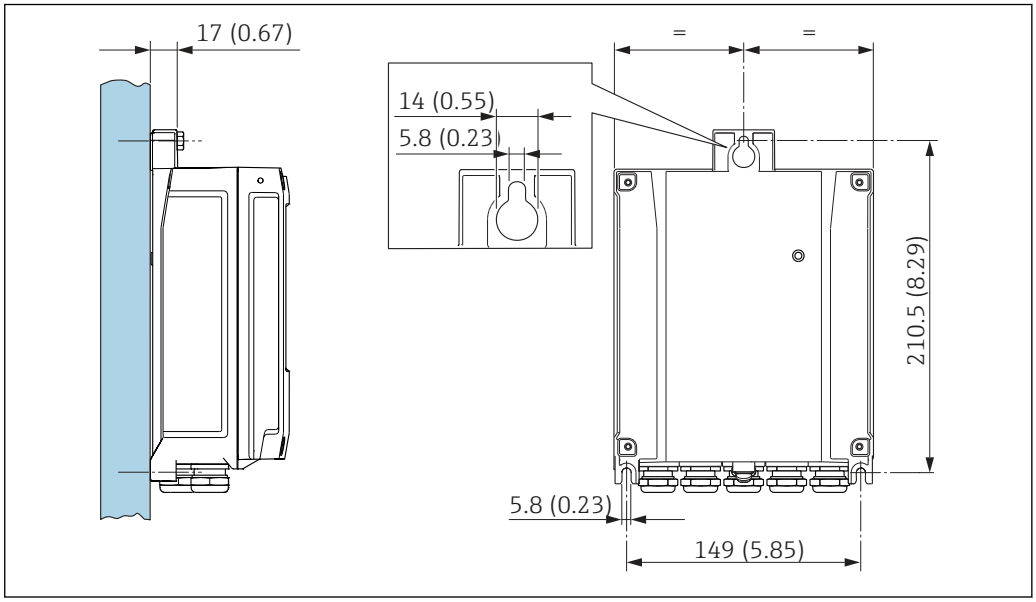

10 *Engineering unit mm (in)*

1. Drill the holes.
2. Insert wall plugs into the drilled holes.
3. Screw in the securing screws slightly at first.
4. Fit the transmitter housing over the securing screws and mount in place.
5. Tighten the securing screws.

Post mounting

⚠ WARNING

Excessive tightening torque applied to the fixing screws!

Risk of damaging the plastic transmitter.

▶ Tighten the fixing screws as per the tightening torque:

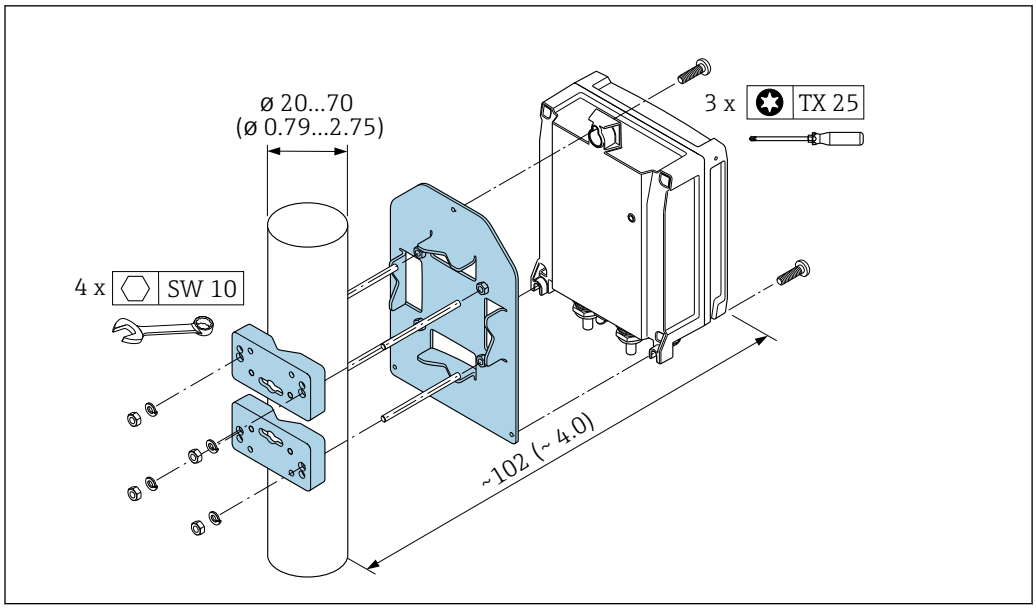

11 *Engineering unit mm (in)*

6.2.5 Turning the transmitter housing

To provide easier access to the connection compartment or display module, the transmitter housing can be turned.

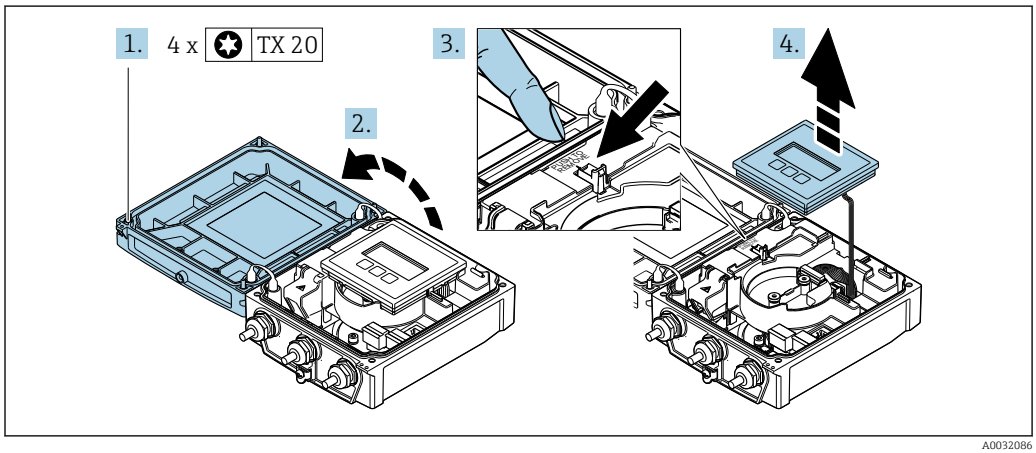

1. Loosen the fixing screws of the housing cover (when reassembling, pay attention to the tightening torque → 36).
2. Open the housing cover.
3. Unlock the display module.
4. Remove the display module.

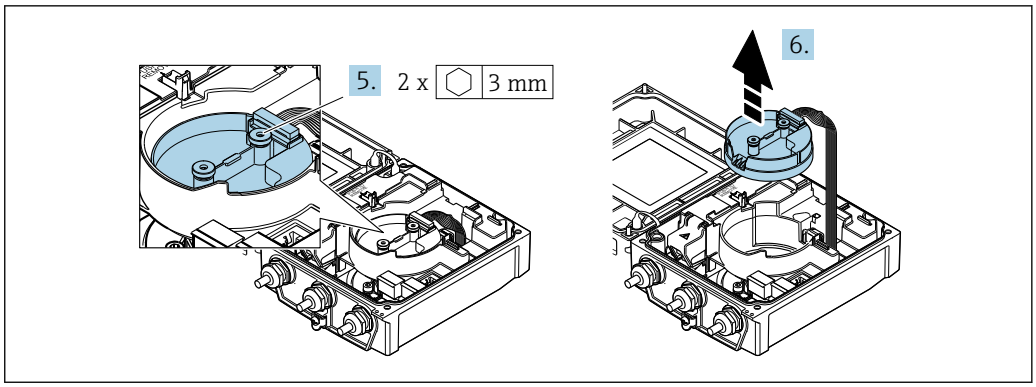

A0032087

5. Loosen the fixing screws of the smart sensor electronics module (when reassembling, pay attention to the tightening torque → 36).
6. Remove the smart sensor electronics module (when reassembling, pay attention to the coding of the plug → 36).

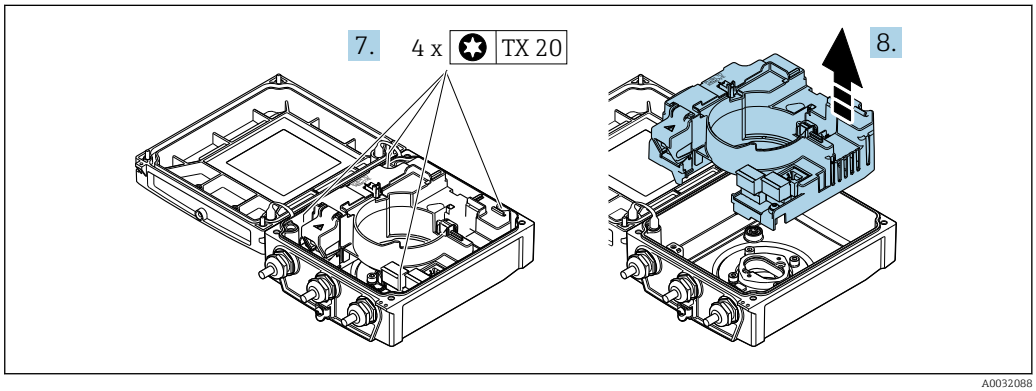

A0032088

7. Loosen the fixing screws of the main electronics module (when reassembling, pay attention to the tightening torque → 36).
8. Remove the main electronics module.

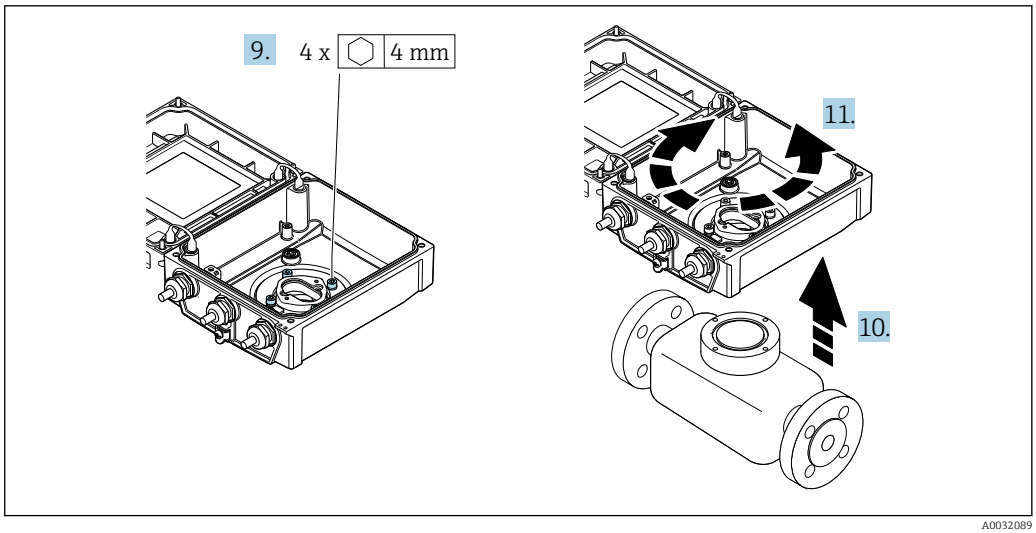

A0032089

9. Loosen the fixing screws of the transmitter housing (when reassembling, pay attention to the tightening torque → 36).
10. Lift the transmitter housing.
11. Turn the housing to the desired position in increments of 90°.

Reassembling the transmitter housing

WARNING

Excessive tightening torque applied to the fixing screws!
Risk of damaging the plastic transmitter.
► Tighten the fixing screws as per the tightening torque:

Step → 34	Fixing screw	Tightening torques for housing made of:	
		Aluminum	Plastic
1	Housing cover	2.5 Nm (1.8 lbf ft)	1 Nm (0.7 lbf ft)
5	Smart sensor electronics module	0.6 Nm (0.4 lbf ft)	
7	Main electronics module	1.5 Nm (1.1 lbf ft)	
9/10	Transmitter housing	5.5 Nm (4.1 lbf ft)	

NOTICE

Plug of the smart sensor electronics module connected incorrectly!
No measuring signal is output.
► Plug in the plug of the smart sensor electronics module as per the coding.

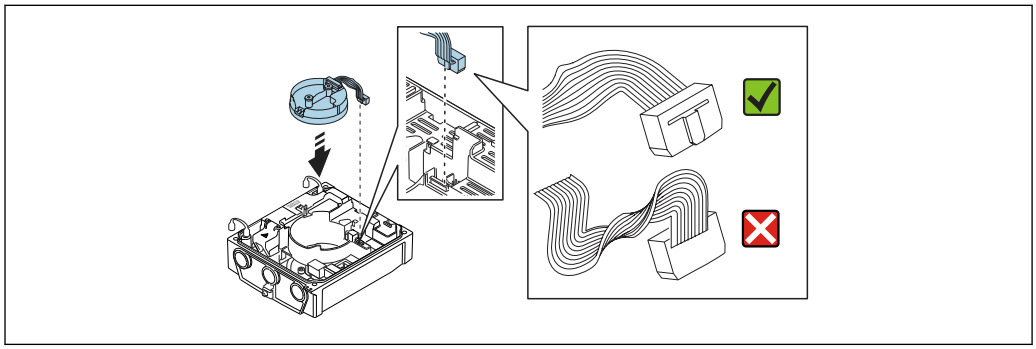

A0021585

► Reverse the procedure to reassemble the measuring device.

6.2.6 Turning the display module

The display module can be turned to optimize display readability and operability.

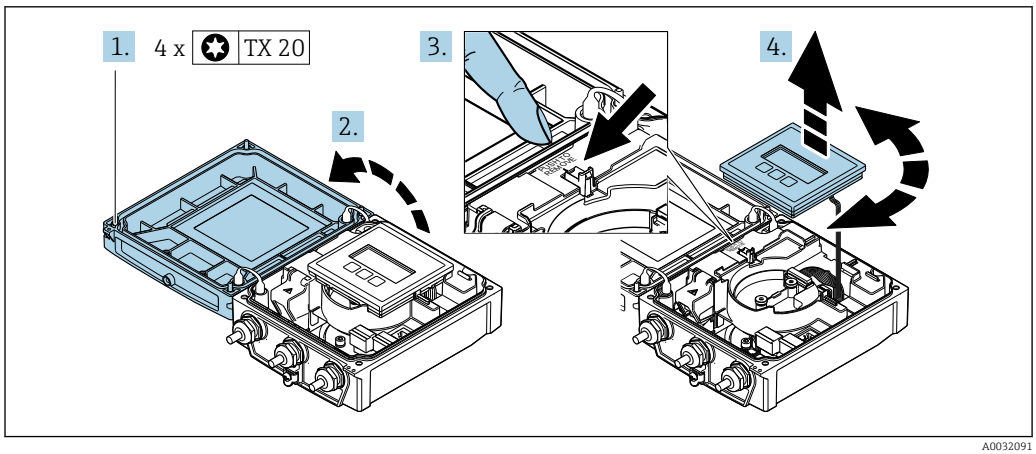

A0032091

1. Loosen the fixing screws of the housing cover (when reassembling, pay attention to the tightening torque → 37).
2. Open the housing cover.
3. Unlock the display module.

4. Pull out the display module and turn it to the desired position in increments of 90°.

Reassembling the transmitter housing

⚠ WARNING

Excessive tightening torque applied to the fixing screws!
Risk of damaging the plastic transmitter.
- ▶ Tighten the fixing screws as per the tightening torque:

Step (see graphic)	Fixing screw	Tightening torque for housing made of:	
		Aluminum	Plastic
1	Housing cover	2.5 Nm (1.8 lbf ft)	1 Nm (0.7 lbf ft)

- ▶ Reverse the procedure to reassemble the measuring device.

6.3 Post-installation check

Is the device undamaged (visual inspection)?	❑
Does the measuring device conform to the measuring point specifications? For example: ▪ Process temperature ▪ Process pressure (refer to the section on "Pressure-temperature ratings" in the "Technical Information" document) ▪ Ambient temperature ▪ Measuring range	❑
Has the correct orientation for the sensor been selected ? ▪ According to sensor type ▪ According to medium temperature ▪ According to medium properties (outgassing, with entrained solids)	❑
Does the arrow on the sensor nameplate match the direction of flow of the fluid through the piping ?	❑
Are the measuring point identification and labeling correct (visual inspection)?	❑
Is the device adequately protected from precipitation and direct sunlight?	❑
Have the fixing screws been tightened with the correct tightening torque?	❑

7 Electrical connection

NOTICE

The measuring device does not have an internal circuit breaker.

- ▶ For this reason, assign the measuring device a switch or power-circuit breaker so that the power supply line can be easily disconnected from the mains.
- ▶ Although the measuring device is equipped with a fuse, additional overcurrent protection (maximum 16 A) should be integrated into the system installation.

7.1 Connection conditions

7.1.1 Requirements for connecting cable

The connecting cables provided by the customer must fulfill the following requirements.

Electrical safety

In accordance with applicable federal/national regulations.

Permitted temperature range

- The installation guidelines that apply in the country of installation must be observed.
- The cables must be suitable for the minimum and maximum temperatures to be expected.

Power supply cable

Standard installation cable is sufficient.

Signal cable

Current output 0/4 to 20 mA

Standard installation cable is sufficient.

Current output 4 to 20 mA HART

A shielded cable is recommended. Observe grounding concept of the plant.

Pulse/frequency/switch output

Standard installation cable is sufficient.

Status input

Standard installation cable is sufficient.

Connecting cable for remote version

Electrode cable

Standard cable	3 ×0.38 mm² (20 AWG) with common, braided copper shield (⌀ ~9.5 mm (0.37 in)) and individual shielded cores
Cable for empty pipe detection (EPD)	4 ×0.38 mm² (20 AWG) with common, braided copper shield (⌀ ~9.5 mm (0.37 in)) and individual shielded cores
Conductor resistance	≤50 Ω/km (0.015 Ω/ft)
Capacitance: core/shield	≤420 pF/m (128 pF/ft)
Operating temperature	–20 to +80 °C (–68 to +176 °F)

Coil current cable

Standard cable	3 ×0.75 mm² (18 AWG) with common, braided copper shield (φ ~9 mm (0.35 in))
Conductor resistance	≤37 Ω/km (0.011 Ω/ft)
Capacitance: core/core, shield grounded	≤120 pF/m (37 pF/ft)
Operating temperature	−20 to +80 °C (−68 to +176 °F)
Test voltage for cable insulation	≤ AC 1433 V r.m.s. 50/60 Hz or ≥ DC 2026 V

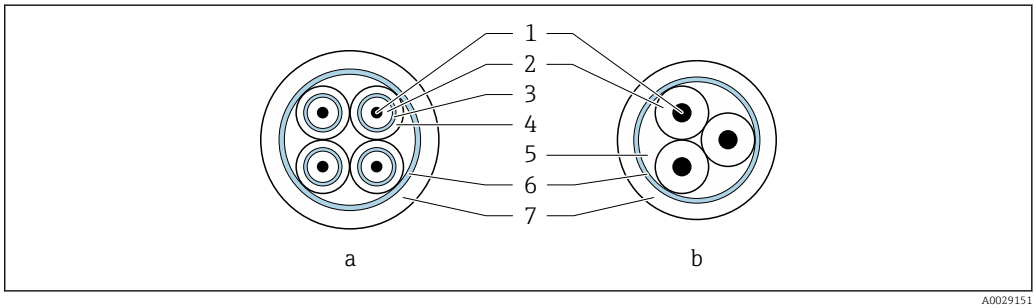

12 Cable cross-section

a Electrode cable
b Coil current cable
1 Core
2 Core insulation
3 Core shield
4 Core jacket
5 Core reinforcement
6 Cable shield
7 Outer jacket

Reinforced connecting cables

Reinforced connecting cables with an additional, reinforcing metal braid should be used for:
- When laying the cable directly in the ground
- Where there is a risk of damage from rodents

Operation in zones of severe electrical interference

The measuring system meets the general safety requirements → 174 and EMC specifications → 156.

Grounding is by means of the ground terminal provided for the purpose inside the connection housing. The stripped and twisted lengths of cable shield to the ground terminal must be as short as possible.

Cable diameter

- Cable glands supplied:
  - For standard cable: M20 × 1.5 with cable φ6 to 12 mm (0.24 to 0.47 in)
  - For reinforced cable: M20 × 1.5 with cable φ9.5 to 16 mm (0.37 to 0.63 in)
- (Plug-in) spring terminals for wire cross-sections 0.5 to 2.5 mm² (20 to 14 AWG)

7.1.2 Required tools

- Torque wrench
- For cable entries: Use corresponding tools
- Wire stripper
- When using stranded cables: Crimper for wire end ferrule

7.1.3 Terminal assignment

Transmitter

The sensor can be ordered with terminals.

Connection methods available		Possible options for order code "Electrical connection"
Outputs	**Power supply**	
terminals	terminals	▪ Option **A**: coupling M20x1 ▪ Option **B**: thread M20x1 ▪ Option **C**: thread G ½" ▪ Option **D**: thread NPT ½"

Supply voltage

Order code "Power supply"	Terminal numbers	terminal voltage		Frequency range
Option **L** (wide range power unit)	1 (L+/L), 2 (L-/N)	DC 24 V	±25%	–
		AC 24 V	±25%	50/60 Hz, ±4 Hz
		AC 100 to 240 V	−15 to +10%	50/60 Hz, ±4 Hz

Signal transmission 0-20 mA/4-20 mA HART and additional outputs and inputs

Order code for "Output" and "Input"	Terminal numbers							
	Output 1		Output 2		Output 3		Input	
	26 (+)	27 (-)	24 (+)	25 (-)	22 (+)	23 (-)	20 (+)	21 (-)
Option **H**	▪ 4-20 mA HART (active) ▪ 0-20 mA (active)		Pulse/frequency output (passive)		Switch output (passive)		-	
Option **I**	▪ 4-20 mA HART (active) ▪ 0-20 mA (active)		Pulse/frequency/ switch output (passive)		Pulse/frequency/ switch output (passive)		Status input	

Remote version

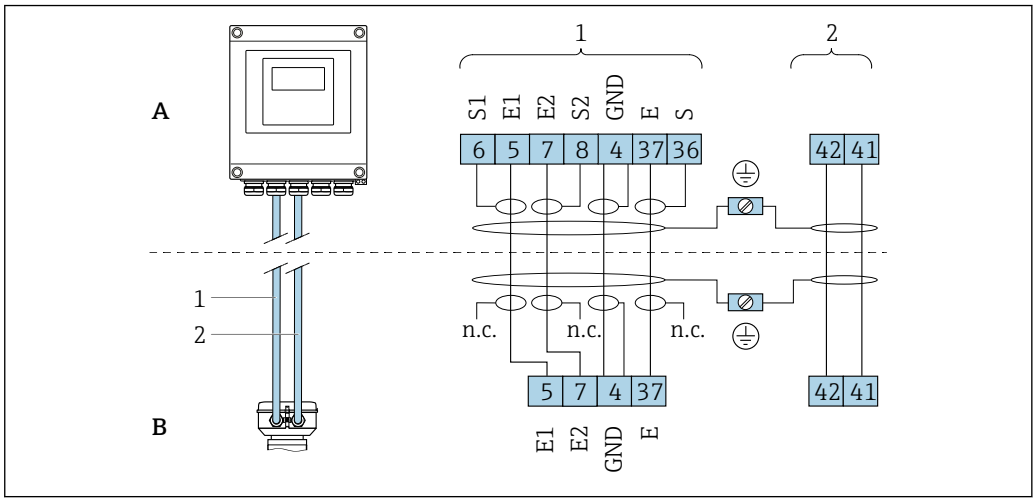

13 *Remote version terminal assignment*

A Transmitter wall-mount housing
B Sensor connection housing
1 Electrode cable
2 Coil current cable
n.c. Not connected, insulated cable shields

Terminal No. and cable colors: 6/5 = brown; 7/8 = white; 4 = green; 36/37 = yellow

7.1.4 Shielding and grounding

7.1.5 Requirements for the supply unit

Supply voltage

Transmitter

Order code for "Power supply"	terminal voltage		Frequency range
Option **L**	DC 24 V	±25%	–
	AC 24 V	±25%	50/60 Hz, ±4 Hz
	AC 100 to 240 V	−15 to +10%	50/60 Hz, ±4 Hz

7.1.6 Preparing the measuring device

Carry out the steps in the following order:

1. Mount the sensor and transmitter.
2. Connection housing, sensor: Connect connecting cable.
3. Transmitter: Connect connecting cable.
4. Transmitter: Connect signal cable and cable for supply voltage.

NOTICE

Insufficient sealing of the housing!
Operational reliability of the measuring device could be compromised.
► Use suitable cable glands corresponding to the degree of protection.

1. Remove dummy plug if present.

2. If the measuring device is supplied without cable glands:
   Provide suitable cable gland for corresponding connecting cable.
3. If the measuring device is supplied with cable glands:
   Observe requirements for connecting cables → 38.

7.1.7 Preparing the connecting cable for the remote version

When terminating the connecting cable, pay attention to the following points:

1. In the case of the electrode cable:
   Make sure that the ferrules do not touch the core shields on the sensor side.
   Minimum distance = 1 mm (exception: green “GND” cable)
2. In the case of the coil current cable:
   Insulate one core of the three-core cable at the level of the core reinforcement. You only require two cores for the connection.
3. For cables with fine-wire cores (stranded cables):
   Fit the cores with ferrules.

Transmitter

Electrode cable	Coil current cable
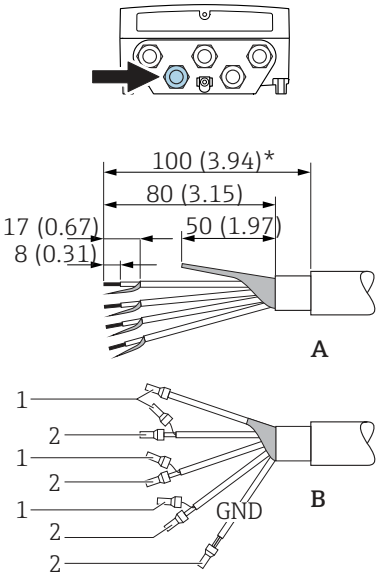 14 *Engineering unit mm (in)*	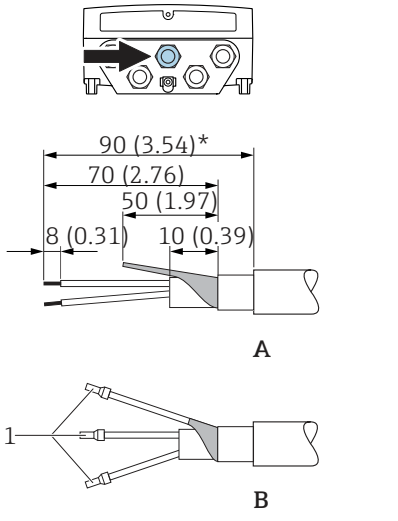 15 *Engineering unit mm (in)*

A = Termination of the cables
B = Termination of the fine-wire cores with ferrules
1 = Red ferrules, ⌀ 1.0 mm (0.04 in)
2 = White ferrules, ⌀ 0.5 mm (0.02 in)
* = Stripping only for reinforced cables

Sensor

Electrode cable	Coil current cable
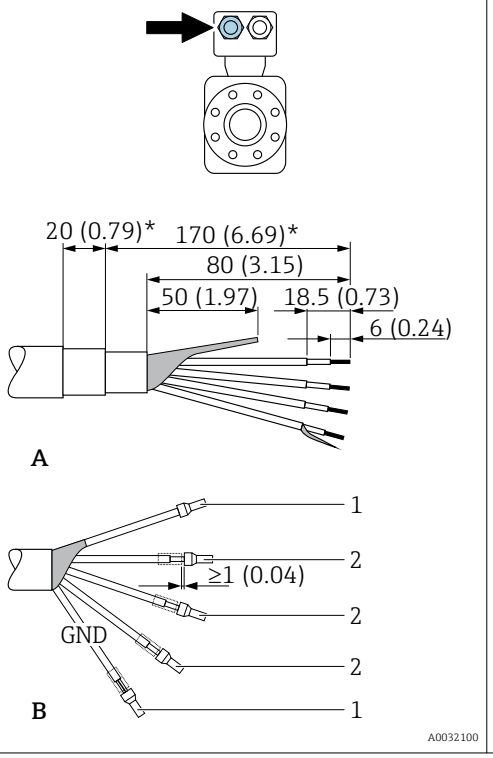	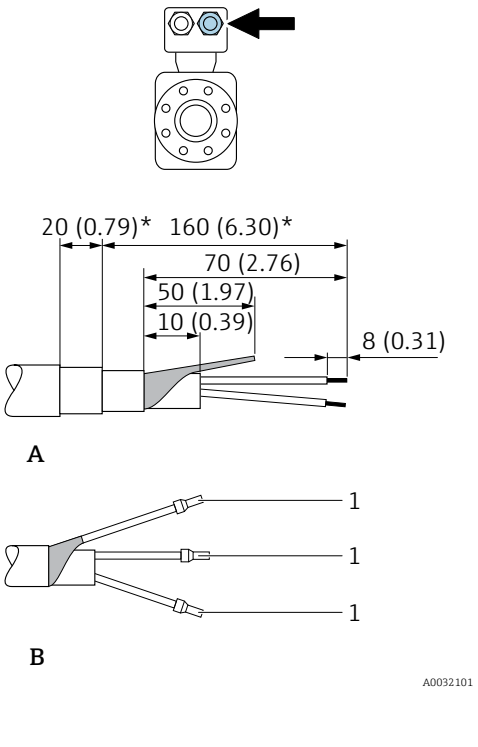

A = Termination of the cables
B = Termination of the fine-wire cores with ferrules
1 = Red ferrules, Φ 1.0 mm (0.04 in)
2 = White ferrules, Φ 0.5 mm (0.02 in)
* = Stripping only for reinforced cables

7.2 Connecting the measuring device

⚠ WARNING

Risk of electric shock! Components carry dangerous voltages!

- Have electrical connection work carried out by correspondingly trained specialists only.
- Observe applicable federal/national installation codes and regulations.
- Comply with local workplace safety regulations.
- Observe grounding concept of the plant.
- Never mount or wire the measuring device while it is connected to the supply voltage.
- Before the supply voltage is applied, connect the protective ground to the measuring device.

7.2.1 Connecting the remote version

⚠ WARNING

Risk of damaging the electronic components!

- Connect the sensor and transmitter to the same potential equalization.
- Only connect the sensor to a transmitter with the same serial number.
- Ground the connection housing of the sensor via the external screw terminal.

The following procedure (in the action sequence given) is recommended for the remote version:

1. Mount the sensor and transmitter.
2. Connect the connecting cable for the remote version.

3. Connect the transmitter.

Connecting the connecting cable to the sensor connection housing

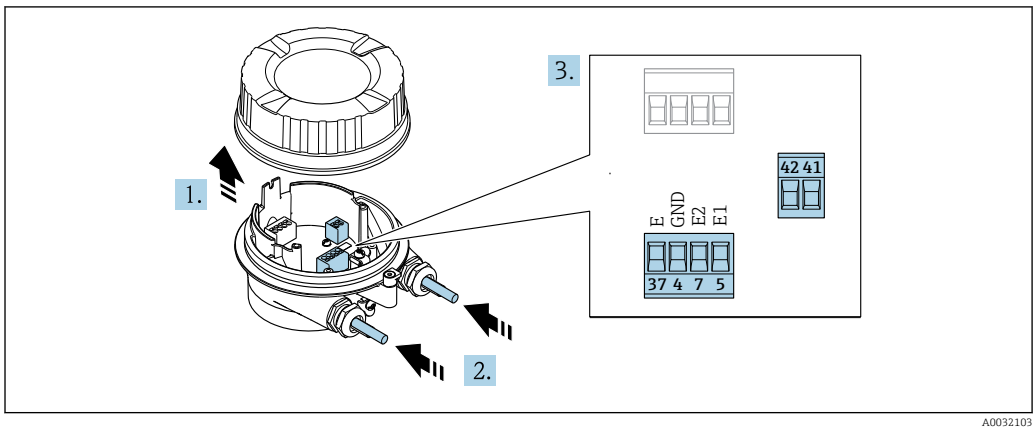

16 *Sensor: connection module*

1. Loosen the securing clamp of the housing cover.
2. Unscrew and lift off the housing cover.
3. Push the cable through the cable entry . To ensure tight sealing, do not remove the sealing ring from the cable entry.
4. Strip the cable and cable ends. In the case of stranded cables, also fit ferrules → 42.
5. Connect the cable in accordance with the terminal assignment → 41.
6. Firmly tighten the cable glands.
7. **WARNING**

   Housing degree of protection may be voided due to insufficient sealing of the housing.
   - Screw in the screw without using any lubricant. The threads on the cover are coated with a dry lubricant.

   Reverse the procedure to reassemble the sensor.

Connecting the connecting cable to the transmitter

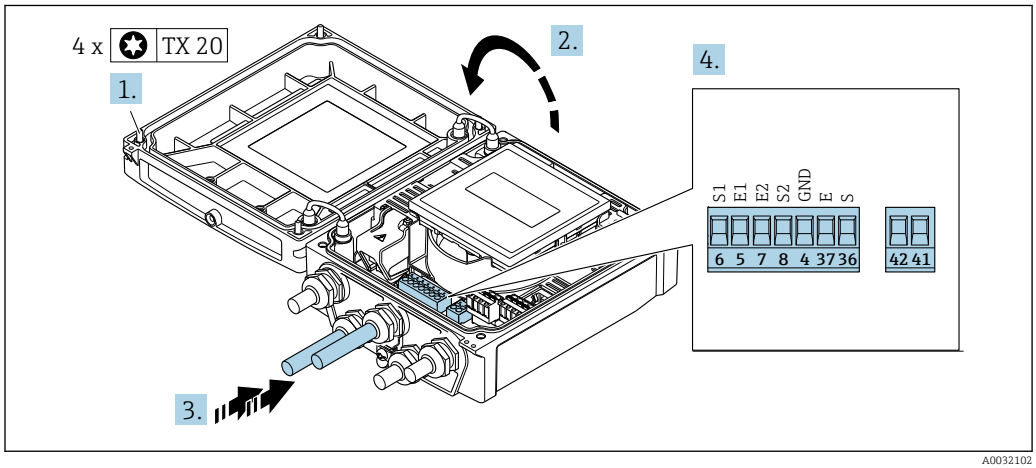

17 *Transmitter: main electronics module with terminals*

1. Loosen the 4 fixing screws on the housing cover.
2. Open the housing cover.

3. Push the cable through the cable entry . To ensure tight sealing, do not remove the sealing ring from the cable entry.
4. Strip the cable and cable ends. In the case of stranded cables, also fit ferrules → 42.
5. Connect the cable in accordance with the terminal assignment → 41.
6. Firmly tighten the cable glands.
7. **WARNING**

   Housing degree of protection may be voided due to insufficient sealing of the housing.
   - Screw in the screw without using any lubricant.

   Reverse the removal procedure to reassemble the transmitter.

7.2.2 Connecting the transmitter

WARNING

Housing degree of protection may be voided due to insufficient sealing of the housing.
- Screw in the screw without using any lubricant. The threads on the cover are coated with a dry lubricant.

Tightening torques for plastic housing

Housing cover fixing screw	1.3 Nm
Cable entry	4.5 to 5 Nm
Ground terminal	2.5 Nm

For HART communication: when connecting the cable shielding to the ground terminal, observe the grounding concept of the facility.

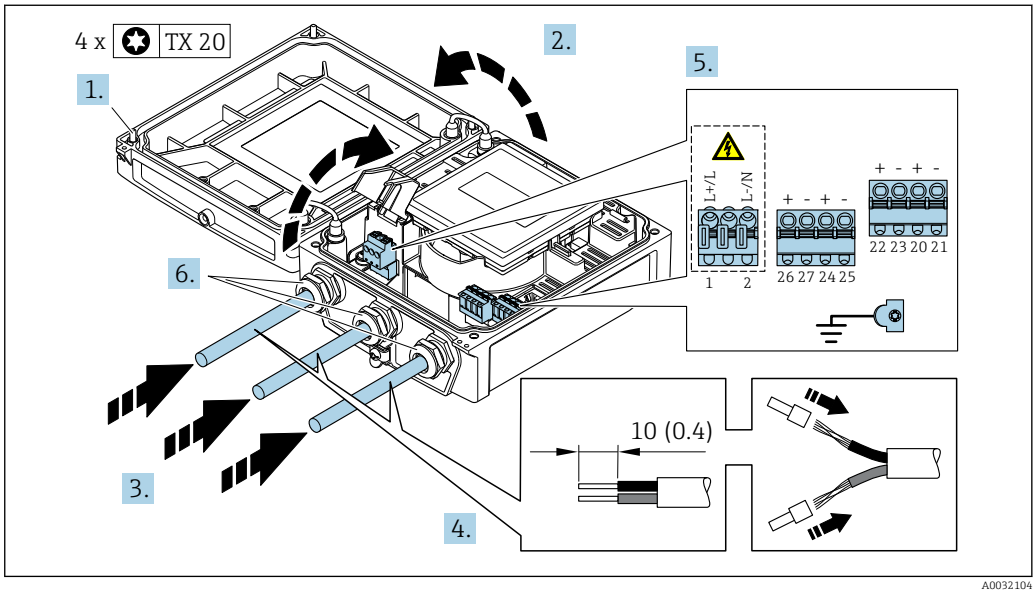

18 *Connecting the supply voltage and 0-20 mA/4-20 mA HART with additional outputs and inputs*

1. Loosen the 4 fixing screws on the housing cover.
2. Open the housing cover.
3. Push the cable through the cable entry . To ensure tight sealing, do not remove the sealing ring from the cable entry.
4. Strip the cable and cable ends. In the case of stranded cables, also fit ferrules.

5. Connect the cable in accordance with the terminal assignment → 40. For supply voltage: open the shock protection cover.
6. Firmly tighten the cable glands.
7. **WARNING**

   Housing degree of protection may be voided due to insufficient sealing of the housing.
   - Screw in the screw without using any lubricant.

   Reverse the removal procedure to reassemble the transmitter.

7.2.3 Ensure potential equalization

Requirements

CAUTION

Electrode damage can result in the complete failure of the device!
- Same electrical potential for the medium and sensor
- Remote version: same electrical potential for the sensor and transmitter
- Company-internal grounding concepts
- Pipe material and grounding

Connection example, standard scenario

Metal, grounded pipe

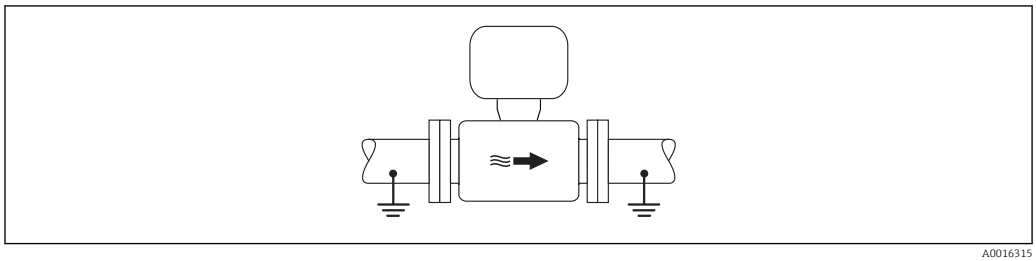

19 *Potential equalization via measuring tube*

Connection example in special situations

Unlined and ungrounded metal pipe

This connection method also applies in situations where:
- The customary potential equalization is not used
- Equalizing currents are present

Ground cable	Copper wire, at least 6 mm² (0.0093 in²)

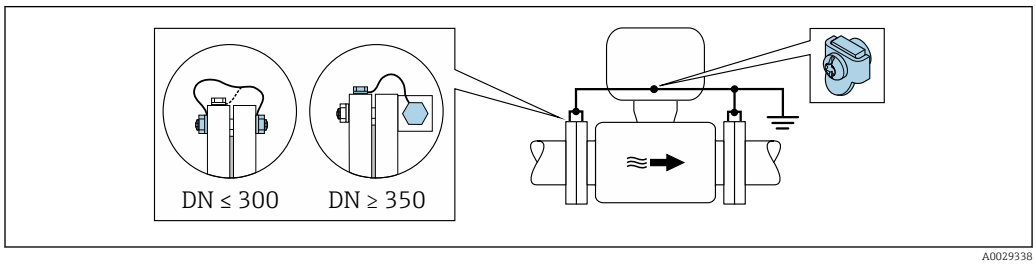

20 *Potential equalization via ground terminal and pipe flanges*

1. Connect both sensor flanges to the pipe flange via a ground cable and ground them.
2. If DN ≤ 300 (12"): Mount the ground cable directly on the conductive flange coating of the sensor with the flange screws.
3. If DN ≥ 350 (14"): Mount the ground cable directly on the metal transport bracket. Observe screw tightening torques: see the Sensor Brief Operating Instructions.
4. Connect the connection housing of the transmitter or sensor to ground potential by means of the ground terminal provided for the purpose.

For remote device versions, the ground terminal in the example always refers to the sensor and **not** to the transmitter.

Plastic pipe or pipe with insulating liner

This connection method also applies in situations where:
- The customary potential equalization is not used
- Equalizing currents are present

Ground cable	Copper wire, at least 6 mm² (0.0093 in²)

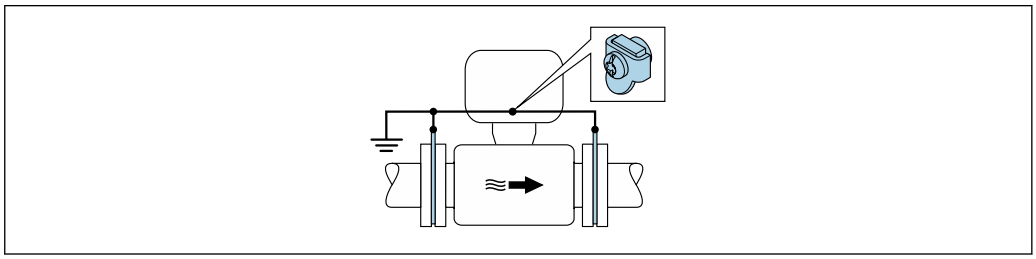

A0029339

21 Potential equalization via ground terminal and ground disks

1. Connect the ground disks to the ground terminal via the ground cable.
2. Connect the ground disks to ground potential.

For remote device versions, the ground terminal in the example always refers to the sensor and **not** to the transmitter.

Pipe with a cathodic protection unit

This connection method is only used if the following two conditions are met:
- Metal pipe without liner or pipe with electrically conductive liner
- Cathodic protection is integrated in the personal protection equipment

Ground cable	Copper wire, at least 6 mm² (0.0093 in²)

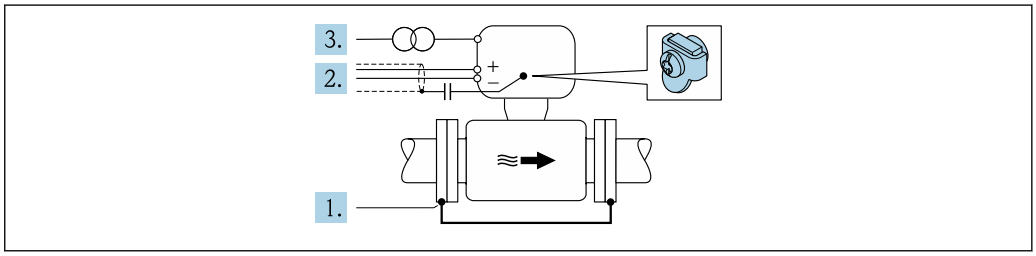

A0029340

Prerequisite: The sensor is installed in the pipe in a way that provides electrical insulation.

1. Connect the two flanges of the pipe to one another via a ground cable.

2. Guide the shield of the signal lines through a capacitor.
3. Connect the measuring device to the power supply such that it is floating in relation to the protective ground (isolation transformer).

For remote device versions, the ground terminal in the example always refers to the sensor and **not** to the transmitter.

7.3 Special connection instructions

7.3.1 Connection examples

Current output 4 to 20 mA HART

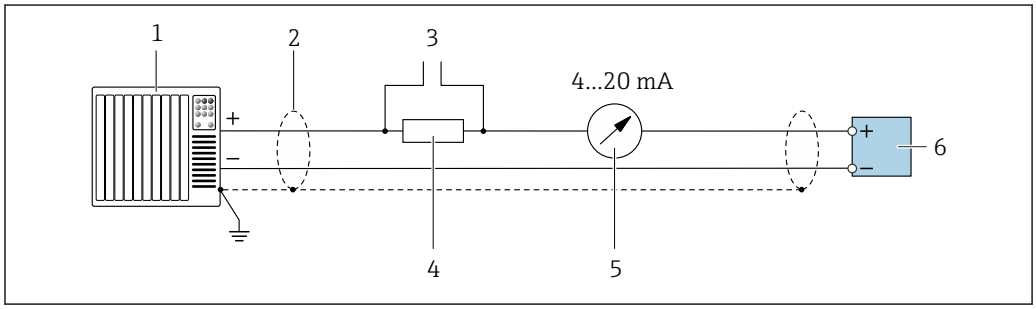

22 *Connection example for 4 to 20 mA HART current output (active)*

1 *Automation system with current input (e.g. PLC)*
2 *Cable shield: the cable shield must be grounded at both ends to comply with EMC requirements; observe cable specifications*
3 *Connection for HART operating devices*
4 *Resistor for HART communication (≥ 250 Ω): observe maximum load → 149*
5 *Analog display unit: observe maximum load → 149*
6 *Transmitter*

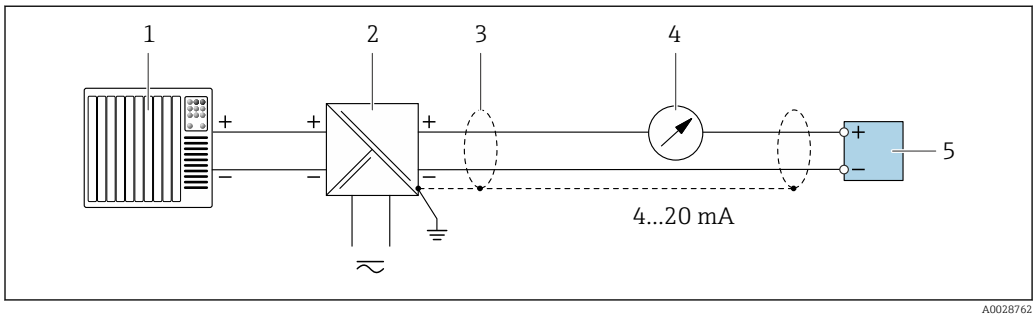

23 *Connection example for 4 to 20 mA HART current output (passive)*

1 *Automation system with current input (e.g. PLC)*
2 *Power supply*
3 *Cable shield: the cable shield must be grounded at both ends to comply with EMC requirements; observe cable specifications*
4 *Analog display unit: observe maximum load → 149*
5 *Transmitter*

Pulse/frequency output

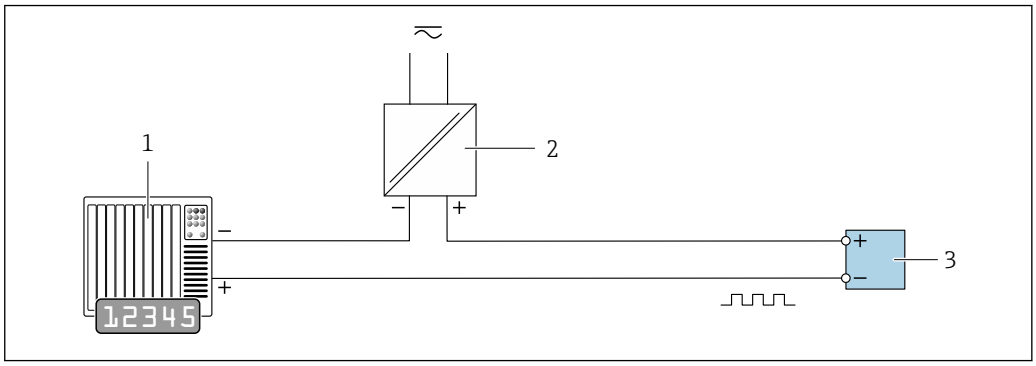

24 *Connection example for pulse/frequency output (passive)*

1 *Automation system with pulse/frequency input (e.g. PLC)*
2 *Power supply*
3 *Transmitter: Observe input values* → 150

Switch output

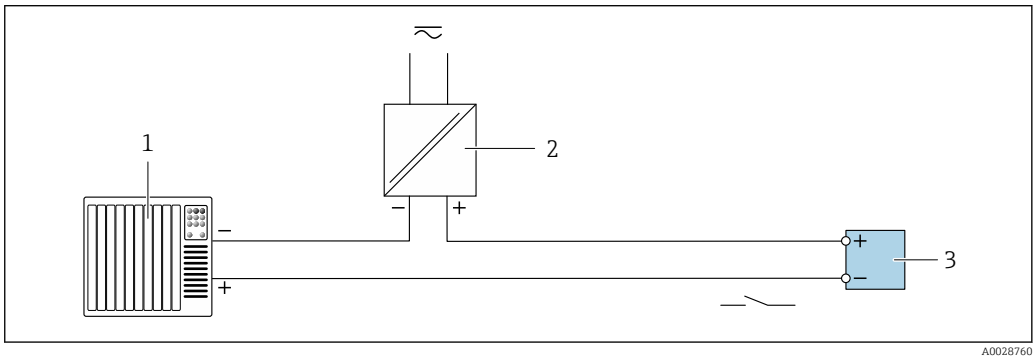

25 *Connection example for switch output (passive)*

1 *Automation system with switch input (e.g. PLC)*
2 *Power supply*
3 *Transmitter: Observe input values* → 150

Status input

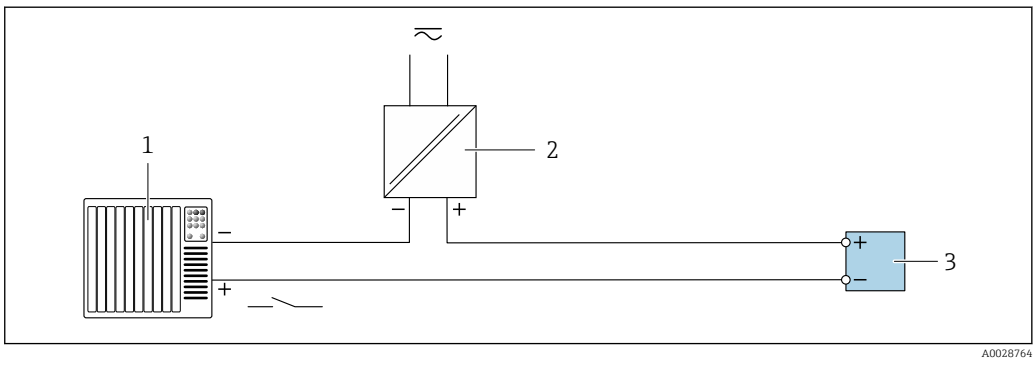

26 *Connection example for status input*

1 *Automation system with status output (e.g. PLC)*
2 *Power supply*
3 *Transmitter: Observe input values*

7.4 Ensuring the degree of protection

7.4.1 Degree of protection IP66/67, Type 4X enclosure

The measuring device fulfills all the requirements for the IP66/67 degree of protection, Type 4X enclosure.

To guarantee IP66/67 degree of protection, Type 4X enclosure, carry out the following steps after the electrical connection:

1. Check that the housing seals are clean and fitted correctly. Dry, clean or replace the seals if necessary.
2. Tighten all housing screws and screw covers.
3. Firmly tighten the cable glands.
4. To ensure that moisture does not enter the cable entry, route the cable so that it loops down before the cable entry ("water trap").

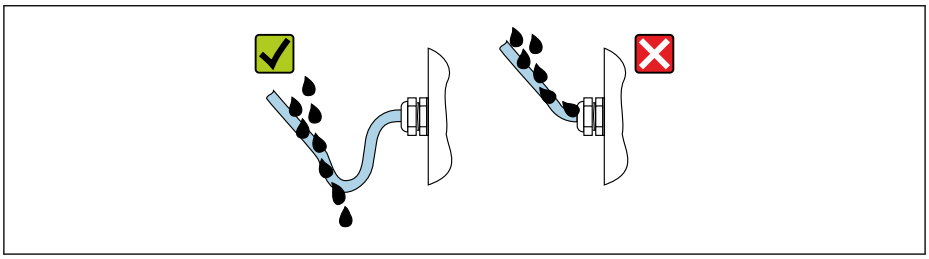

A0029278

5. Insert dummy plugs into unused cable entries.

7.5 Post-connection check

Are cables or the device undamaged (visual inspection)?	❑
Do the cables used meet the requirements→ 🖹 38?	❑
Do the cables have adequate strain relief?	❑
Are all the cable glands installed, firmly tightened and leak-tight? Cable run with "water trap" → 🖹 50 ?	❑
Only for remote version: is the sensor connected to the right transmitter? Check the serial number on the nameplate of the sensor and transmitter.	❑
Does the supply voltage match the specifications on the transmitter nameplate → 🖹 41?	❑
Is the terminal assignment correct → 🖹 40?	❑
If supply voltage is present, do values appear on the display module?	❑
Is the potential equalization established correctly ?	❑
Are all housing covers installed and the screws tightened with the correct tightening torque?	❑

8 Operation options

8.1 Overview of operation options

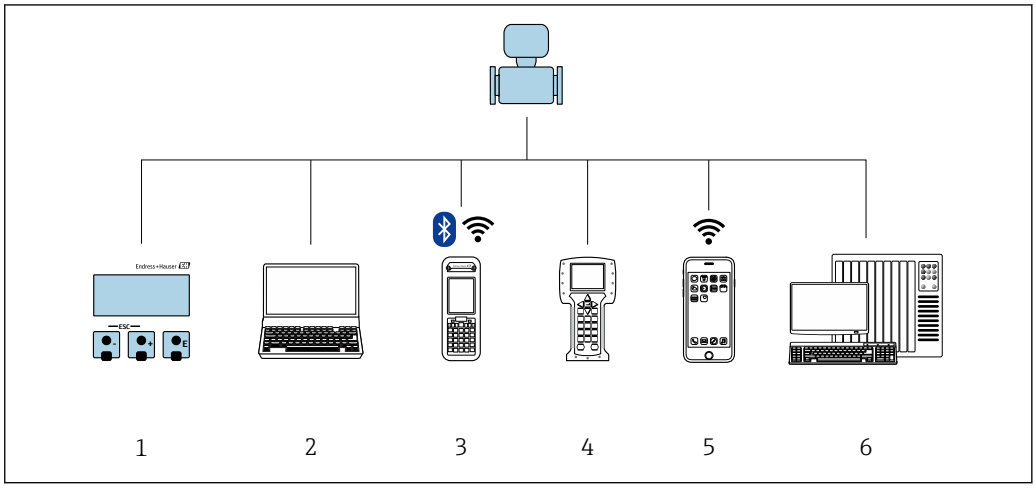

1 *Local operation via display module*
2 *Computer with Web browser (e.g. Internet Explorer) or with operating tool (e.g. FieldCare, DeviceCare, AMS Device Manager, SIMATIC PDM)*
3 *Field Xpert SFX350 or SFX370*
4 *Field Communicator 475*
5 *Mobile handheld terminal*
6 *Control system (e.g. PLC)*

8.2 Structure and function of the operating menu

8.2.1 Structure of the operating menu

For an overview of the operating menu for experts: "Description of Device Parameters" document supplied with the device→ 176

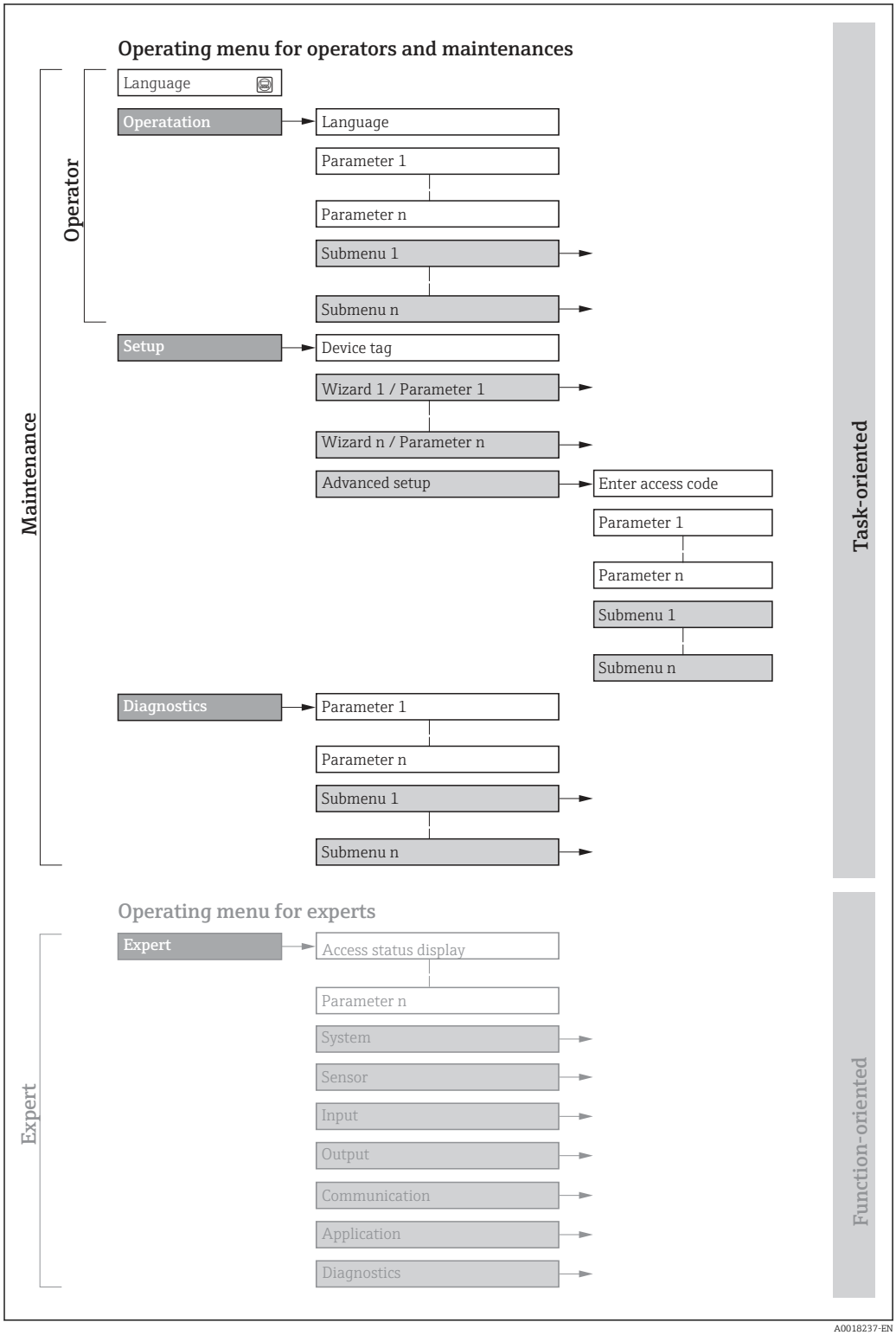

27 *Schematic structure of the operating menu*

8.2.2 Operating philosophy

The individual parts of the operating menu are assigned to certain user roles (operator, maintenance etc.). Each user role contains typical tasks within the device lifecycle.

Menu/parameter		User role and tasks	Content/meaning
Language	task-oriented	**Role "Operator", "Maintenance"** Tasks during operation: ▪ Configuring the operational display ▪ Reading measured values	▪ Defining the operating language ▪ Defining the Web server operating language ▪ Resetting and controlling totalizers
Operation			▪ Configuring the operational display (e.g. display format, display contrast) ▪ Resetting and controlling totalizers
Setup		**"Maintenance" role** Commissioning: ▪ Configuration of the measurement ▪ Configuration of the outputs	Wizards for fast commissioning: ▪ Set the system units ▪ Set the input ▪ Configure the outputs ▪ Configuring the operational display ▪ Define the output conditioning ▪ Set the low flow cut off ▪ Configure empty pipe detection Advanced setup ▪ For more customized configuration of the measurement (adaptation to special measuring conditions) ▪ Configuration of totalizers ▪ Configuration of electrode cleaning (optional) ▪ Configure the WLAN settings ▪ Administration (define access code, reset measuring device)
Diagnostics		**"Maintenance" role** Fault elimination: ▪ Diagnostics and elimination of process and device errors ▪ Measured value simulation	Contains all parameters for error detection and analyzing process and device errors: ▪ Diagnostic list Contains up to 5 currently pending diagnostic messages. ▪ Event logbook Contains event messages that have occurred. ▪ Device information Contains information for identifying the device. ▪ Measured values Contains all current measured values. ▪ **Data logging** submenu with "Extended HistoROM" order option Storage and visualization of measured values ▪ Heartbeat The functionality of the device is checked on demand and the verification results are documented. ▪ Simulation Is used to simulate measured values or output values.
Expert	function-oriented	Tasks that require detailed knowledge of the function of the device: ▪ Commissioning measurements under difficult conditions ▪ Optimal adaptation of the measurement to difficult conditions ▪ Detailed configuration of the communication interface ▪ Error diagnostics in difficult cases	Contains all the parameters of the device and makes it possible to access these parameters directly using an access code. The structure of this menu is based on the function blocks of the device: ▪ System Contains all higher-order device parameters which do not concern the measurement or the communication interface. ▪ Sensor Configuration of the measurement. ▪ Input Configuring the status input. ▪ Output Configuring of the analog current outputs as well as the pulse/frequency and switch output. ▪ Communication Configuration of the digital communication interface and the Web server. ▪ Application Configure the functions that go beyond the actual measurement (e.g. totalizer). ▪ Diagnostics Error detection and analysis of process and device errors and for device simulation and Heartbeat Technology.

8.3 Access to the operating menu via the local display

8.3.1 Operational display

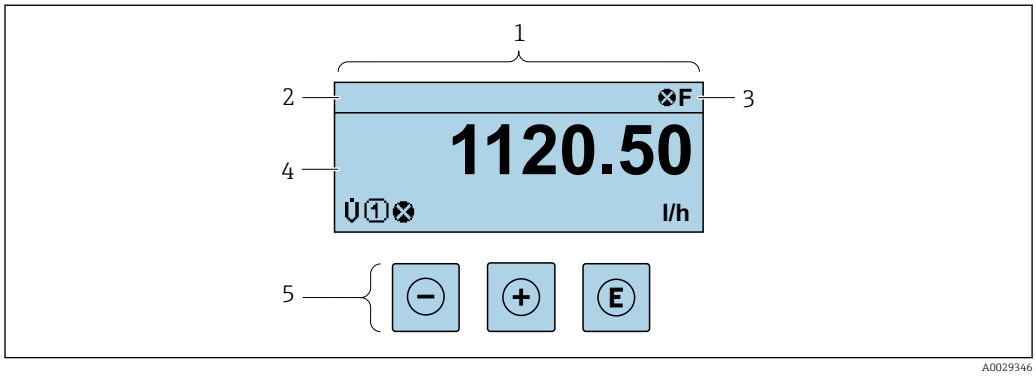

1 *Operational display*
2 *Device tag→ 82*
3 *Status area*
4 *Display area for measured values (4-line)*
5 *Operating elements→ 59*

Status area

The following symbols appear in the status area of the operational display at the top right:
- Status signals→ 124
  - **F**: Failure
  - **C**: Function check
  - **S**: Out of specification
  - **M**: Maintenance required
- Diagnostic behavior→ 125
  - : Alarm
  - : Warning
- : Locking (the device is locked via the hardware)
- : Communication (communication via remote operation is active)

Display area

In the display area, each measured value is prefaced by certain symbol types for further description:

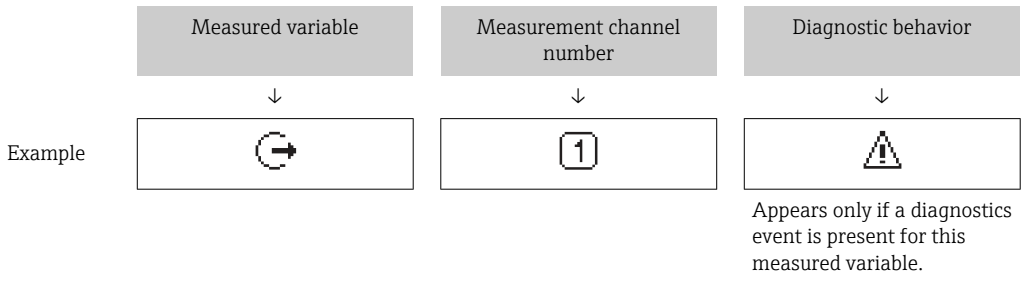

Measured values

Symbol	Meaning
U̇	Volume flow
G	Conductivity

	Mass flow
	Totalizer The measurement channel number indicates which of the three totalizers is displayed.
	Output The measurement channel number indicates which of the outputs is displayed.
	Status input

Measurement channel numbers

Symbol	Meaning
1 ... 4	Measurement channel 1 to 4
The measurement channel number is displayed only if more than one channel is present for the same measured variable type (e.g. Totalizer 1 to 3).	

Diagnostic behavior

The diagnostic behavior pertains to a diagnostic event that is relevant to the displayed measured variable. For information on the symbols → 125

The number and display format of the measured values can be configured via the **Format display** parameter (→ 93).

8.3.2 Navigation view

In the submenu	In the wizard
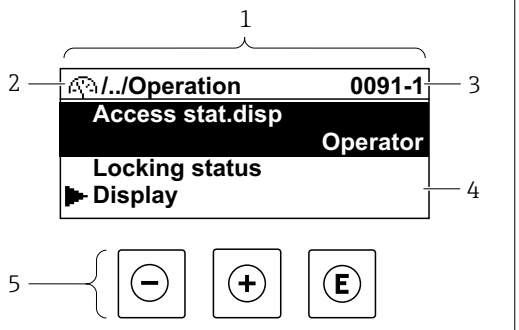	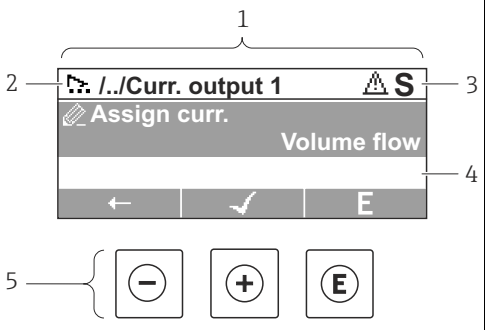

1 Navigation view
2 Navigation path to current position
3 Status area
4 Display area for navigation
5 Operating elements → 59

Navigation path

The navigation path - displayed at the top left in the navigation view - consists of the following elements:

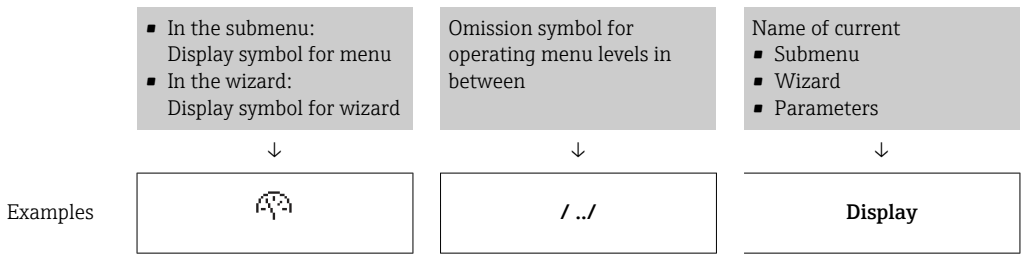

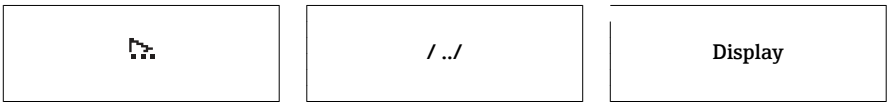

For more information about the icons in the menu, refer to the "Display area" section → 56

Status area

The following appears in the status area of the navigation view in the top right corner:
- In the submenu
  - The direct access code for the parameter you are navigating to (e.g. 0022-1)
  - If a diagnostic event is present, the diagnostic behavior and status signal
- In the wizard
  If a diagnostic event is present, the diagnostic behavior and status signal

- For information on the diagnostic behavior and status signal → 124
- For information on the function and entry of the direct access code → 61

Display area

Menus

Symbol	Meaning
	Operation Appears: ▪ In the menu next to the "Operation" selection ▪ At the left in the navigation path in the **Operation** menu
	Setup Appears: ▪ In the menu next to the "Setup" selection ▪ At the left in the navigation path in the **Setup** menu
	Diagnostics Appears: ▪ In the menu next to the "Diagnostics" selection ▪ At the left in the navigation path in the **Diagnostics** menu
	Expert Appears: ▪ In the menu next to the "Expert" selection ▪ At the left in the navigation path in the **Expert** menu

Submenus, wizards, parameters

Symbol	Meaning
	Submenu
	Wizard
	Parameters within a wizard No display symbol exists for parameters in submenus.

Locking

Symbol	Meaning
	Parameter locked When displayed in front of a parameter name, indicates that the parameter is locked. ▪ By a user-specific access code ▪ By the hardware write protection switch

Wizard operation

Symbol	Meaning
←	Switches to the previous parameter.
✓	Confirms the parameter value and switches to the next parameter.
E	Opens the editing view of the parameter.

8.3.3 Editing view

Numeric editor	Text editor
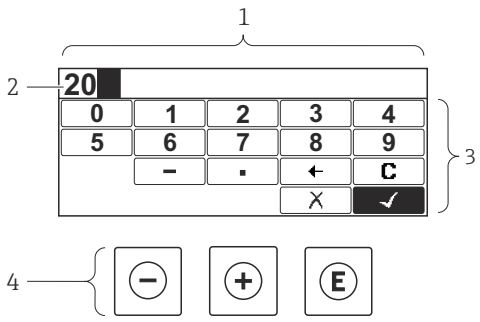	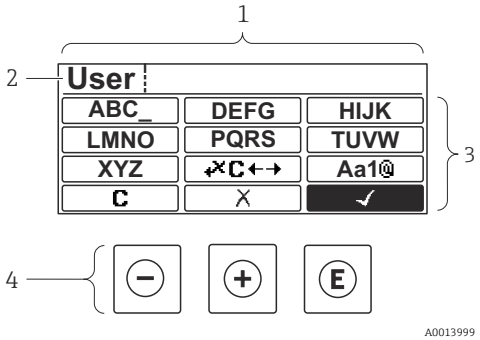

1 Editing view
2 Display area of the entered values
3 Input mask
4 Operating elements → 59

Input mask

The following input symbols are available in the input mask of the numeric and text editor:

Numeric editor

Symbol	Meaning
0 … 9	Selection of numbers from 0 to 9.
.	Inserts decimal separator at the input position.
–	Inserts minus sign at the input position.
✓	Confirms selection.
←	Moves the input position one position to the left.
✗	Exits the input without applying the changes.
C	Clears all entered characters.

Text editor

Symbol	Meaning
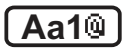	Toggle ▪ Between upper-case and lower-case letters ▪ For entering numbers ▪ For entering special characters
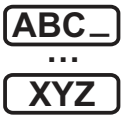	Selection of letters from A to Z.
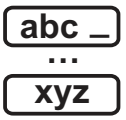	Selection of letters from a to z.
	Selection of special characters.
	Confirms selection.
	Switches to the selection of the correction tools.
	Exits the input without applying the changes.
	Clears all entered characters.

Correction symbols under

Symbol	Meaning
	Clears all entered characters.
	Moves the input position one position to the right.
	Moves the input position one position to the left.
	Deletes one character immediately to the left of the input position.

8.3.4 Operating elements

Operating key(s)	Meaning
	**Minus key** *In a menu, submenu* Moves the selection bar upwards in a choose list. *With a Wizard* Confirms the parameter value and goes to the previous parameter. *With a text and numeric editor* In the input screen, moves the selection bar to the left (backwards).
	**Plus key** *In a menu, submenu* Moves the selection bar downwards in a choose list. *With a Wizard* Confirms the parameter value and goes to the next parameter. *With a text and numeric editor* Moves the selection bar to the right (forwards) in an input screen.
	**Enter key** *For operational display* ▪ Pressing the key briefly opens the operating menu. ▪ Pressing the key for 2 s opens the context menu including the option for activating the keypad lock. *In a menu, submenu* ▪ Pressing the key briefly: – Opens the selected menu, submenu or parameter. – Starts the wizard. – If help text is open, closes the help text of the parameter. ▪ Pressing the key for 2 s for parameter: If present, opens the help text for the function of the parameter. *With a Wizard* Opens the editing view of the parameter. *With a text and numeric editor* ▪ Pressing the key briefly: – Opens the selected group. – Carries out the selected action. ▪ Pressing the key for 2 s confirms the edited parameter value.
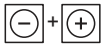	**Escape key combination (press keys simultaneously)** *In a menu, submenu* ▪ Pressing the key briefly: – Exits the current menu level and takes you to the next higher level. – If help text is open, closes the help text of the parameter. ▪ Pressing the key for 2 s returns you to the operational display ("home position"). *With a Wizard* Exits the wizard and takes you to the next higher level. *With a text and numeric editor* Closes the text or numeric editor without applying changes.
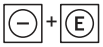	**Minus/Enter key combination (press the keys simultaneously)** Press the key for 3 s: deactivate the keypad lock.
	**Minus/Plus/Enter key combination (press the keys simultaneously)** *For operational display* Enables or disables the keypad lock (only SD02 display module).

8.3.5 Opening the context menu

Using the context menu, the user can call up the following menus quickly and directly from the operational display:

- Setup
- Simulation

Calling up and closing the context menu

The user is in the operational display.

1. Press E for 2 s.
   ↳ The context menu opens.

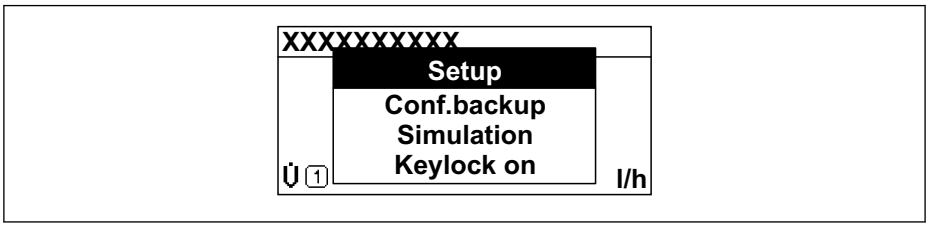

2. Press − + + simultaneously.
   ↳ The context menu is closed and the operational display appears.

Calling up the menu via the context menu

1. Open the context menu.
2. Press + to navigate to the desired menu.
3. Press E to confirm the selection.
   ↳ The selected menu opens.

8.3.6 Navigating and selecting from list

Different operating elements are used to navigate through the operating menu. The navigation path is displayed on the left in the header. Icons are displayed in front of the individual menus. These icons are also shown in the header during navigation.

For an explanation of the navigation view with symbols and operating elements
→ 55

Example: Setting the number of displayed measured values to "2 values"

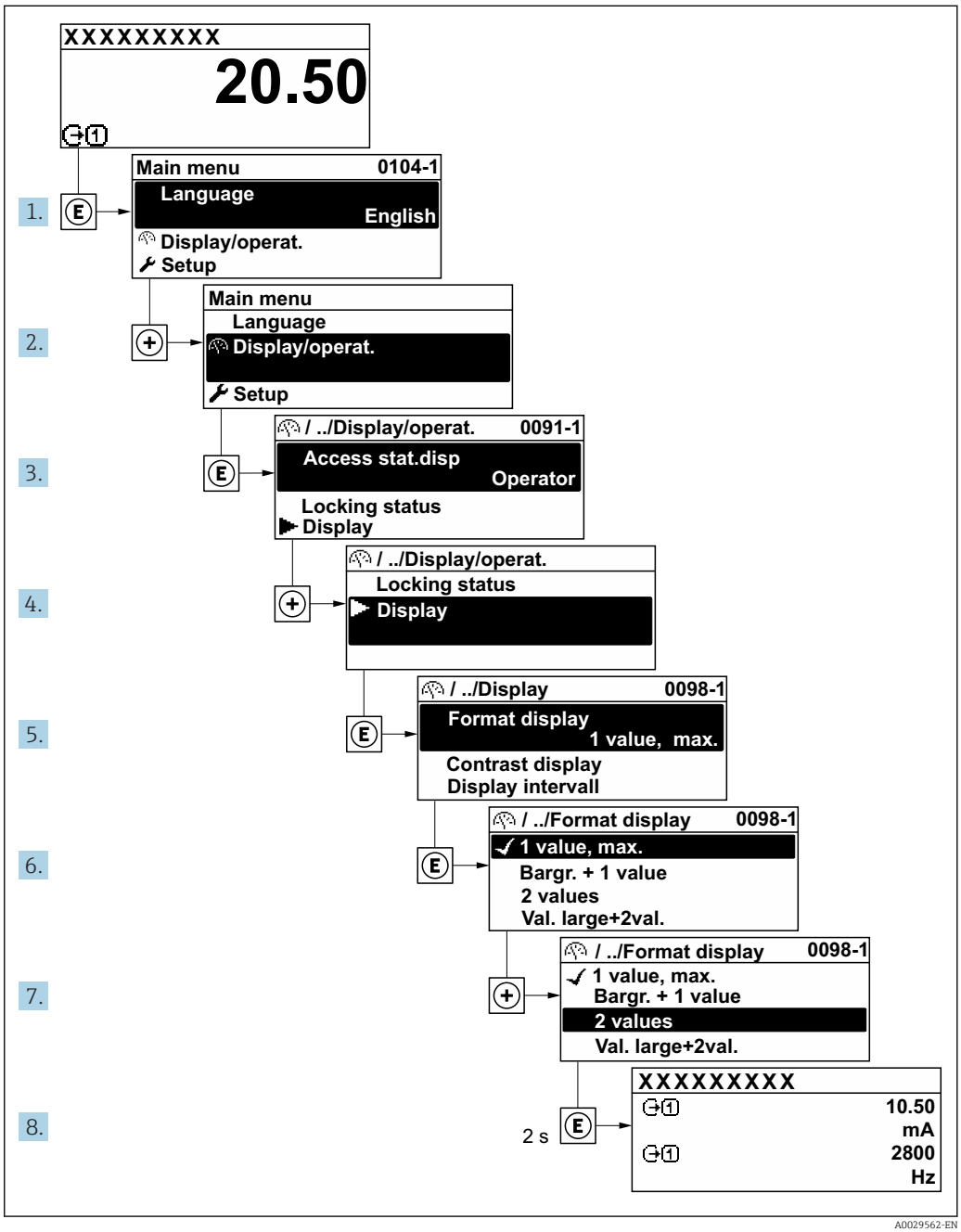

8.3.7 Calling the parameter directly

A parameter number is assigned to every parameter to be able to access a parameter directly via the onsite display. Entering this access code in the **Direct access** parameter calls up the desired parameter directly.

Navigation path
Expert → Direct access

The direct access code consists of a 5-digit number (at maximum) and the channel number, which identifies the channel of a process variable: e.g. 00914-2. In the navigation view, this appears on the right-hand side in the header of the selected parameter.

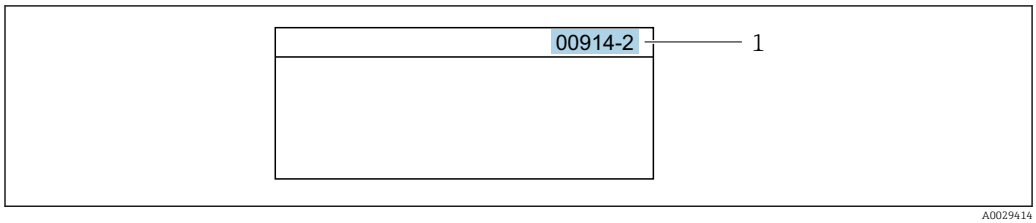

1 Direct access code

Note the following when entering the direct access code:
- The leading zeros in the direct access code do not have to be entered.
  Example: Enter **"914"** instead of **"00914"**
- If no channel number is entered, channel 1 is accessed automatically.
  Example: Enter **00914** → **Assign process variable** parameter
- If a different channel is accessed: Enter the direct access code with the corresponding channel number.
  Example: Enter **00914-2** → **Assign process variable** parameter

For the direct access codes of the individual parameters, see the "Description of Device Parameters" document for the device

8.3.8 Calling up help text

Help text is available for some parameters and can be called up from the navigation view. The help text provides a brief explanation of the parameter function and thereby supports swift and safe commissioning.

Calling up and closing the help text

The user is in the navigation view and the selection bar is on a parameter.

1. Press E for 2 s.
   ↳ The help text for the selected parameter opens.

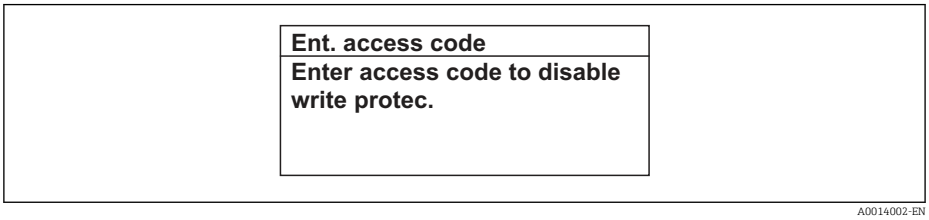

28 Example: Help text for parameter "Enter access code"

2. Press − + + simultaneously.
   ↳ The help text is closed.

8.3.9 Changing the parameters

For a description of the editing view - consisting of the text editor and numeric editor - with symbols → 57, for a description of the operating elements → 59

Example: Changing the tag name in the "Tag description" parameter from 001-FT-101 to 001-FT-102

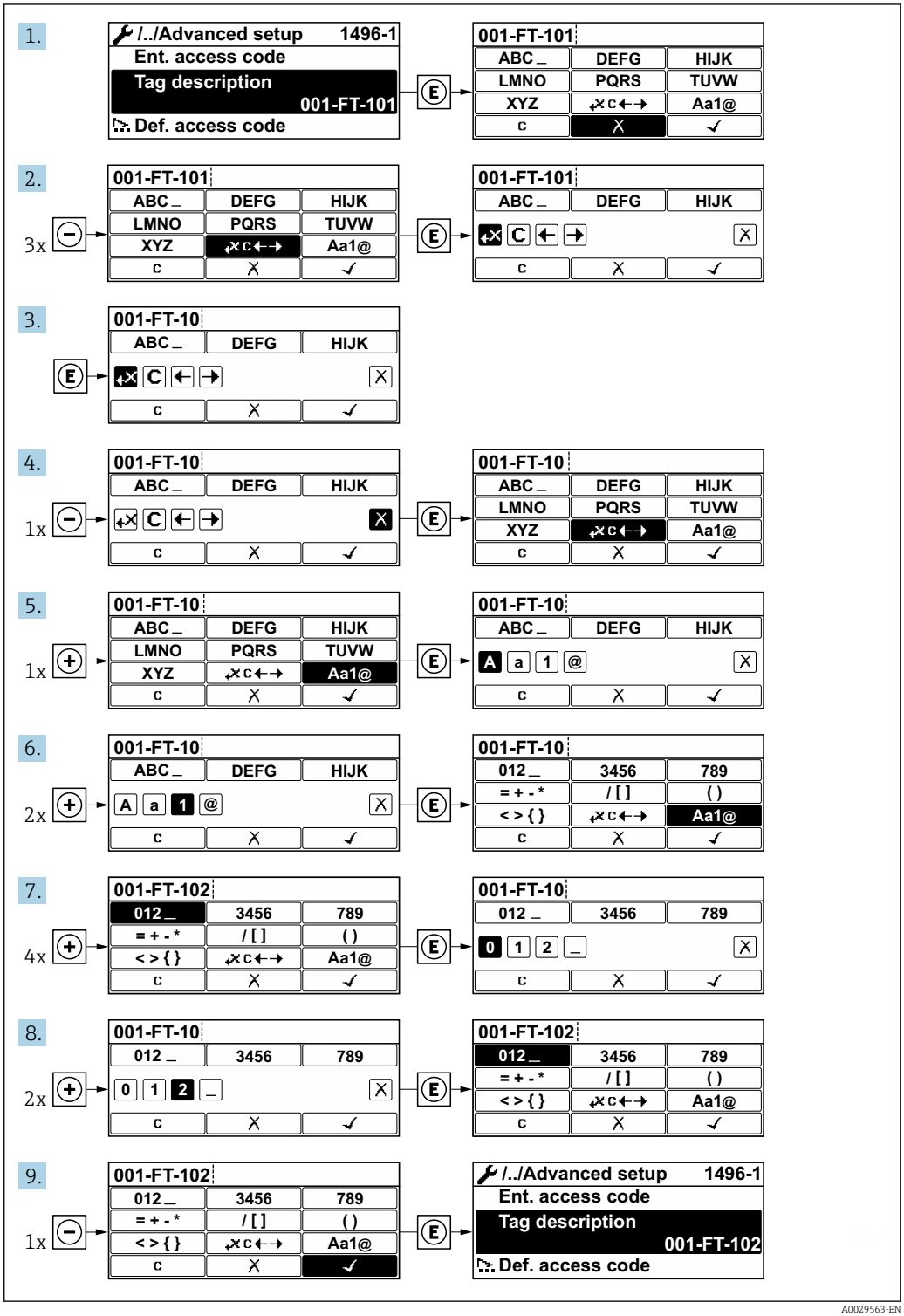

A message is displayed if the value entered is outside the permitted value range.

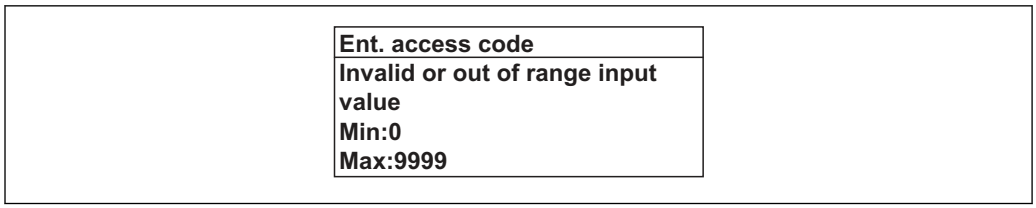

A0014049-EN

8.3.10 User roles and related access authorization

The two user roles "Operator" and "Maintenance" have different write access to the parameters if the customer defines a user-specific access code. This protects the device configuration via the local display from unauthorized access → 111.

Defining access authorization for user roles

An access code is not yet defined when the device is delivered from the factory. Access authorization (read and write access) to the device is not restricted and corresponds to the "Maintenance" user role.

- Define the access code.
  - The "Operator" user role is redefined in addition to the "Maintenance" user role. Access authorization differs for the two user roles.

Access authorization to parameters: "Maintenance" user role

Access code status	Read access	Write access
An access code has not yet been defined (factory setting).	✔	✔
After an access code has been defined.	✔	✔ 1)

1) The user only has write access after entering the access code.

Access authorization to parameters: "Operator" user role

Access code status	Read access	Write access
After an access code has been defined.	✔	-- 1)

1) Despite the defined access code, certain parameters can always be modified and thus are excepted from the write protection, as they do not affect the measurement. Refer to the "Write protection via access code" section

The user role with which the user is currently logged on is indicated by the **Access status display** parameter. Navigation path: Operation → Access status display

8.3.11 Disabling write protection via access code

If the 🔒-symbol appears on the local display in front of a parameter, the parameter is write-protected by a user-specific access code and its value cannot be changed at the moment using local operation → 111.

Parameter write protection via local operation can be disabled by entering the user-specific access code in the **Enter access code** parameter via the respective access option.

1. After you press E, the input prompt for the access code appears.
2. Enter the access code.
   - The 🔒-symbol in front of the parameters disappears; all previously write-protected parameters are now re-enabled.

8.3.12 Enabling and disabling the keypad lock

The keypad lock makes it possible to block access to the entire operating menu via local operation. As a result, it is no longer possible to navigate through the operating menu or change the values of individual parameters. Users can only read the measured values on the operational display.

The keypad lock is switched on and off via the context menu.

Switching on the keypad lock

The keypad lock is switched on automatically:
- If the device has not been operated via the display for > 1 minute.
- Each time the device is restarted.

To activate the keylock manually:

1. The device is in the measured value display.
   Press E for at least 2 seconds.
   ↳ A context menu appears.
2. In the context menu select the **Keylock on** option.
   ↳ The keypad lock is switched on.

If the user attempts to access the operating menu while the keypad lock is active, the **Keylock on** message appears.

Switching off the keypad lock

1. The keypad lock is switched on.
   Press E for at least 2 seconds.
   ↳ A context menu appears.
2. In the context menu select the **Keylock off** option.
   ↳ The keypad lock is switched off.

8.4 Access to the operating menu via the Web browser

8.4.1 Function range

Thanks to the integrated Web server, the device can be operated and configured via a Web browser and via a service interface (CDI-RJ45) or via a WLAN interface. The structure of the operating menu is the same as for the local display. In addition to the measured values, status information on the device is also displayed and allows the user to monitor the status of the device. Furthermore the device data can be managed and the network parameters can be configured.

A device that has a WLAN interface (can be ordered as an option) is required for the WLAN connection: order code for "Display", option **W1** "WLAN display": 4-line, illuminated; touch control + WLAN. The device acts as an Access Point and enables communication by computer or a mobile handheld terminal.

For additional information on the Web server, refer to the Special Documentation for the device → 177

8.4.2 Prerequisites

Computer hardware

Hardware	Interface	
	CDI-RJ45	**WLAN**
Interface	The computer must have an RJ45 interface.	The operating unit must have a WLAN interface.
Connection	Standard Ethernet cable with RJ45 connector.	Connection via Wireless LAN.
Screen	Recommended size: ≥12" (depends on the screen resolution)	

Computer software

Software	Interface	
	CDI-RJ45	**WLAN**
Recommended operating systems	▪ Microsoft Windows 7 or higher. ▪ Mobile operating systems: – iOS – Android Microsoft Windows XP is supported.	
Web browsers supported	▪ Microsoft Internet Explorer 8 or higher ▪ Microsoft Edge ▪ Mozilla Firefox ▪ Google Chrome ▪ Safari	

Computer settings

Settings	Interface	
	CDI-RJ45	**WLAN**
User rights	Appropriate user rights (e.g. administrator rights) for TCP/IP and proxy server settings are necessary (for adjusting the IP address, subnet mask etc.).	
Proxy server settings of the Web browser	The Web browser setting *Use a Proxy Server for Your LAN* must be **deselected** .	
JavaScript	JavaScript must be enabled. If JavaScript cannot be enabled: enter http://192.168.1.212/basic.html in the address line of the Web browser. A fully functional but simplified version of the operating menu structure starts in the Web browser. When installing a new firmware version: To enable correct data display, clear the temporary memory (cache) of the Web browser under **Internet options**.	
Network connections	Only the active network connections to the measuring device should be used.	
	Switch off all other network connections such as WLAN.	Switch off all other network connections.

In the event of connection problems: → 122

Measuring device: Via CDI-RJ45 service interface

Device	CDI-RJ45 service interface
Measuring device	The measuring device has an RJ45 interface.
Web server	Web server must be enabled; factory setting: ON For information on enabling the Web server → 71

Measuring device: via WLAN interface

Device	WLAN interface
Measuring device	The measuring device has a WLAN antenna: Transmitter with integrated WLAN antenna
Web server	Web server and WLAN must be enabled; factory setting: ON For information on enabling the Web server → 71

8.4.3 Establishing a connection

Via service interface (CDI-RJ45)

Preparing the measuring device

Configuring the Internet protocol of the computer

The following information refers to the default Ethernet settings of the device.

IP address of the device: 192.168.1.212 (factory setting)

1. Switch on the measuring device.
2. Connect to the computer using a cable .
3. If a 2nd network card is not used, close all the applications on the notebook.
   ↳ Applications requiring Internet or a network, such as e-mail, SAP applications, Internet or Windows Explorer.
4. Close any open Internet browsers.
5. Configure the properties of the Internet protocol (TCP/IP) as defined in the table:

IP address	192.168.1.XXX; for XXX all numerical sequences except: 0, 212 and 255 → e.g. 192.168.1.213
Subnet mask	255.255.255.0
Default gateway	192.168.1.212 or leave cells empty

Via WLAN interface

Configuring the Internet protocol of the mobile terminal

NOTICE

If the WLAN connection is lost during the configuration, settings made may be lost.

▶ Make sure that the WLAN connection is not disconnected while configuring the device.

NOTICE

In principle, avoid simultaneous access to the measuring device via the service interface (CDI-RJ45) and the WLAN interface from the same mobile terminal. This could cause a network conflict.

- ▶ Only activate one service interface (CDI-RJ45 service interface or WLAN interface).
- ▶ If simultaneous communication is necessary: configure different IP address ranges, e.g. 192.168.0.1 (WLAN interface) and 192.168.1.212 (CDI-RJ45 service interface).

Preparing the mobile terminal

- ▶ Enable WLAN reception on the mobile terminal.

Establishing a connection from the mobile terminal to the measuring device

1. In the WLAN settings of the mobile terminal:
   Select the measuring device using the SSID (e.g. EH_Promag__A802000).
2. If necessary, select the WPA2 encryption method.
3. Enter the password: serial number of the measuring device ex-works (e.g. L100A802000).
   ↳ LED on display module flashes: it is now possible to operate the measuring device with the Web browser, FieldCare or DeviceCare.

The serial number can be found on the nameplate.

To ensure the safe and swift assignment of the WLAN network to the measuring point, it is advisable to change the SSID name. It should be possible to clearly assign the new SSID name to the measuring point (e.g. tag name) because it is displayed as the WLAN network.

Disconnecting

- ▶ After configuring the device:
  Terminate the WLAN connection between the operating unit and measuring device.

Starting the Web browser

1. Start the Web browser on the computer.

2. Enter the IP address of the Web server in the address line of the Web browser: 192.168.1.212
   ↳ The login page appears.

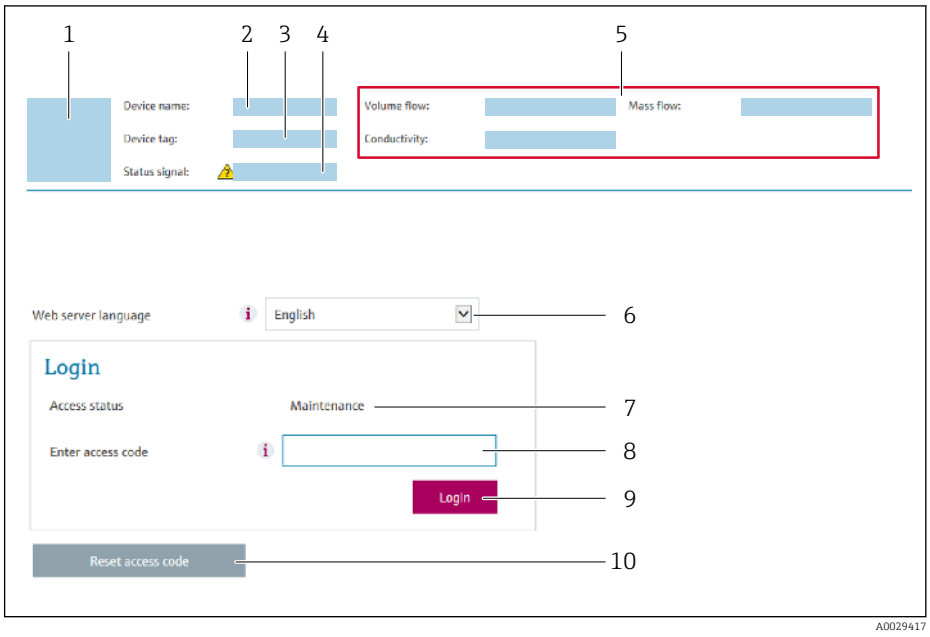

1 *Picture of device*
2 *Device name*
3 *Device tag (→ 🖹 83)*
4 *Status signal*
5 *Current measured values*
6 *Operating language*
7 *User role*
8 *Access code*
9 *Login*
10 *Reset access code (→ 🖹 108)*

If a login page does not appear, or if the page is incomplete → 🖹 122

8.4.4 Logging on

1. Select the preferred operating language for the Web browser.
2. Enter the user-specific access code.
3. Press **OK** to confirm your entry.

Access code	0000 (factory setting); can be changed by customer

If no action is performed for 10 minutes, the Web browser automatically returns to the login page.

8.4.5 User interface

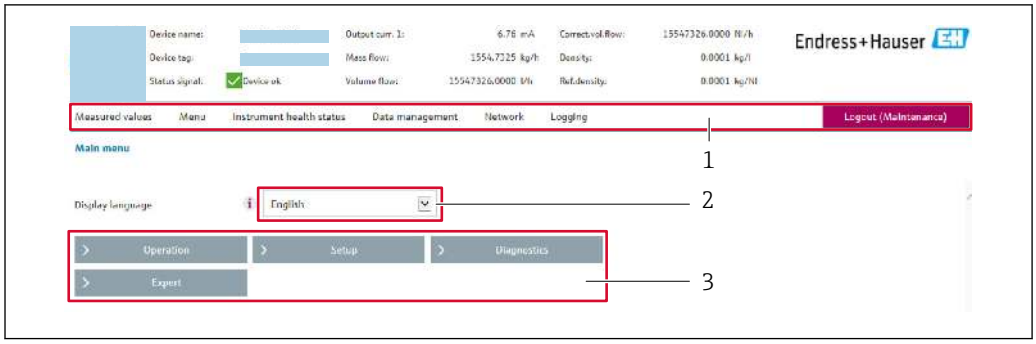

A0029418

1 *Function row*
2 *Local display language*
3 *Navigation area*

Header

The following information appears in the header:
- Device tag
- Device status with status signal → 127
- Current measured values

Function row

Functions	Meaning
Measured values	Displays the measured values of the measuring device
Menu	▪ Access to the operating menu from the measuring device ▪ The structure of the operating menu is the same as for the local display For detailed information on the structure of the operating menu, see the Operating Instructions for the measuring device
Device status	Displays the diagnostic messages currently pending, listed in order of priority
Data management	Data exchange between PC and measuring device: ▪ Device configuration: – Load settings from the device (XML format, save configuration) – Save settings to the device (XML format, restore configuration) ▪ Logbook - Export Event logbook (.csv file) ▪ Documents - Export documents: – Export backup data record (.csv file, create documentation of the measuring point configuration) – Verification report (PDF file, only available with the "Heartbeat Verification" application package)
Network configuration	Configuration and checking of all the parameters required for establishing the connection to the measuring device: ▪ Network settings (e.g. IP address, MAC address) ▪ Device information (e.g. serial number, firmware version)
Logout	End the operation and call up the login page

Navigation area

If a function is selected in the function bar, the submenus of the function open in the navigation area. The user can now navigate through the menu structure.

Working area

Depending on the selected function and the related submenus, various actions can be performed in this area:
- Configuring parameters
- Reading measured values
- Calling up help text
- Starting an upload/download

8.4.6 Disabling the Web server

The Web server of the measuring device can be switched on and off as required using the **Web server functionality** parameter.

Navigation

"Expert" menu → Communication → Web server

Parameter overview with brief description

Parameter	Description	Selection	Factory setting
Web server functionality	Switch the Web server on and off.	▪ Off ▪ On	On

Function scope of the "Web server functionality" parameter

Option	Description
Off	▪ The web server is completely disabled. ▪ Port 80 is locked.
On	▪ The complete functionality of the web server is available. ▪ JavaScript is used. ▪ The password is transferred in an encrypted state. ▪ Any change to the password is also transferred in an encrypted state.

Enabling the Web server

If the Web server is disabled it can only be re-enabled with the **Web server functionality** parameter via the following operating options:
- Via local display
- Via Bedientool "FieldCare"
- Via "DeviceCare" operating tool

8.4.7 Logging out

Before logging out, perform a data backup via the **Data management** function (upload configuration from device) if necessary.

1. Select the **Logout** entry in the function row.
   ↳ The home page with the Login box appears.
2. Close the Web browser.
3. If no longer needed:
   Reset modified properties of the Internet protocol (TCP/IP) → 67.

8.5 Access to the operating menu via the operating tool

The structure of the operating menu in the operating tools is the same as for operation via the local display.

8.5.1 Connecting the operating tool

Via service interface (CDI-RJ45)

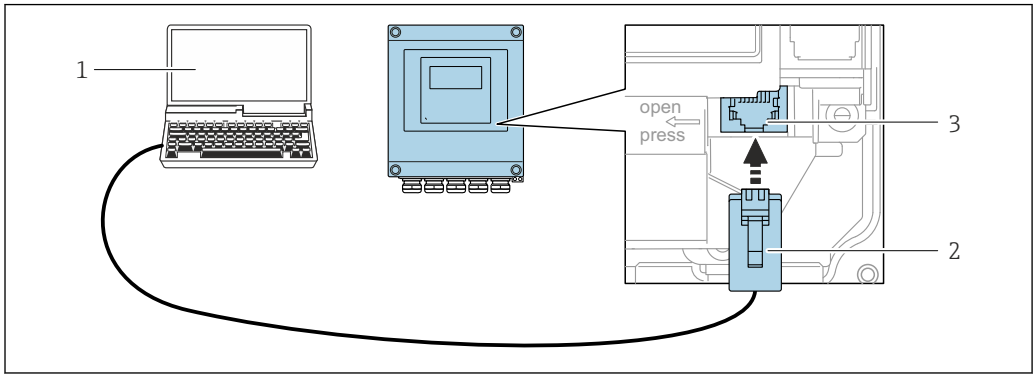

29 *Connection via service interface (CDI-RJ45)*

1 *Computer with Web browser (e.g. Microsoft Internet Explorer, Microsoft Edge) for accessing the integrated device Web server or with "FieldCare", "DeviceCare" operating tool with COM DTM "CDI Communication TCP/IP"*
2 *Standard Ethernet connecting cable with RJ45 plug*
3 *Service interface (CDI-RJ45) of the measuring device with access to the integrated Web server*

Via WLAN interface

The optional WLAN interface is available on the following device version:
Order code for "Display", option **W1** "WLAN display":
4-line, illuminated, graphic display; touch control + WLAN

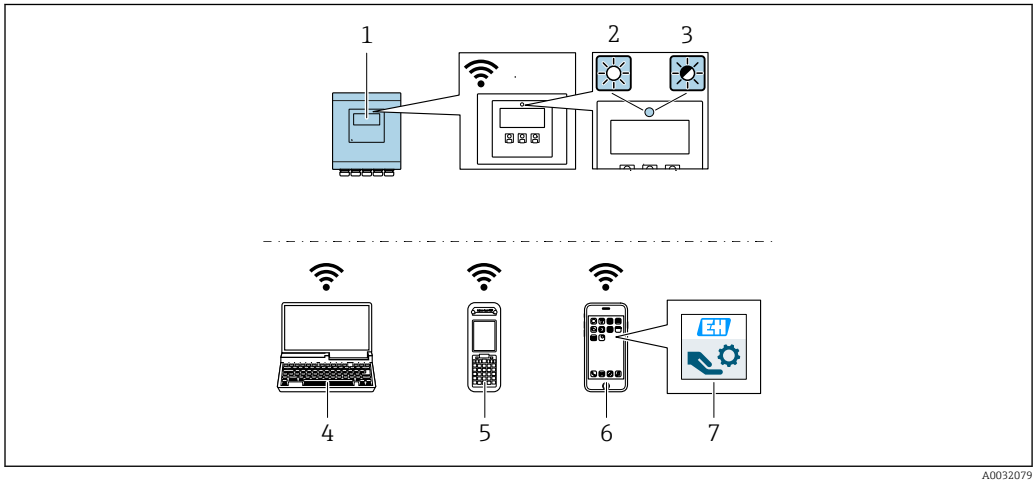

1 *Transmitter with integrated WLAN antenna*
2 *LED lit constantly: WLAN reception is enabled on measuring device*
3 *LED flashing: WLAN connection established between operating unit and measuring device*
4 *Computer with WLAN interface and Web browser (e.g. Microsoft Internet Explorer, Microsoft Edge) for accessing the integrated device Web server or with operating tool (e.g. FieldCare, DeviceCare)*
5 *Mobile handheld terminal with WLAN interface and Web browser (e.g. Microsoft Internet Explorer, Microsoft Edge) for accessing the integrated device Web server or operating tool (e.g. FieldCare, DeviceCare)*
6 *Smartphone or tablet*
7 *SmartBlue App*

Function	WLAN: IEEE 802.11 b/g (2.4 GHz)
Encryption	WPA2-PSK/AES 128 bit
Configurable WLAN channels	1 to 11
Degree of protection	IP67

Available antennas	▪ Internal antenna ▪ External antenna (optional) In the event of poor transmission/reception conditions at the place of installation. Only one antenna active in each case!
Max. range	50 m (164 ft)
Materials: External WLAN antenna	▪ Antenna: ASA plastic (acrylic ester-styrene-acrylonitrile) and nickel-plated brass ▪ Adapter: Stainless steel and nickel-plated brass ▪ Cable: Polyethylene ▪ Connector: Nickel-plated brass ▪ Angle bracket: Stainless steel

Configuring the Internet protocol of the mobile terminal

NOTICE

If the WLAN connection is lost during the configuration, settings made may be lost.

▶ Make sure that the WLAN connection is not disconnected while configuring the device.

NOTICE

In principle, avoid simultaneous access to the measuring device via the service interface (CDI-RJ45) and the WLAN interface from the same mobile terminal. This could cause a network conflict.

▶ Only activate one service interface (CDI-RJ45 service interface or WLAN interface).
▶ If simultaneous communication is necessary: configure different IP address ranges, e.g. 192.168.0.1 (WLAN interface) and 192.168.1.212 (CDI-RJ45 service interface).

Preparing the mobile terminal

▶ Enable WLAN reception on the mobile terminal.

Establishing a connection from the mobile terminal to the measuring device

1. In the WLAN settings of the mobile terminal:
   Select the measuring device using the SSID (e.g. EH_Promag__A802000).
2. If necessary, select the WPA2 encryption method.
3. Enter the password: serial number of the measuring device ex-works (e.g. L100A802000).
   ↳ LED on display module flashes: it is now possible to operate the measuring device with the Web browser, FieldCare or DeviceCare.

The serial number can be found on the nameplate.

To ensure the safe and swift assignment of the WLAN network to the measuring point, it is advisable to change the SSID name. It should be possible to clearly assign the new SSID name to the measuring point (e.g. tag name) because it is displayed as the WLAN network.

Disconnecting

▶ After configuring the device:
Terminate the WLAN connection between the operating unit and measuring device.

8.5.2 Field Xpert SFX350, SFX370

Function range

Field Xpert SFX350 and Field Xpert SFX370 are mobile computers for commissioning and maintenance. They enable efficient device configuration and diagnostics for HART and

FOUNDATION Fieldbus devices in the **non-hazardous area** (SFX350, SFX370) and **hazardous area** (SFX370).

For details, see Operating Instructions BA01202S

Source for device description files

See information → 77

8.5.3 FieldCare

Function scope

FDT-based plant asset management tool from Endress+Hauser. It can configure all smart field devices in a system and helps you manage them. By using the status information, it is also a simple but effective way of checking their status and condition.

Access is via:
- HART protocol
- CDI-RJ45 service interface

Typical functions:
- Configuring parameters of transmitters
- Loading and saving device data (upload/download)
- Documentation of the measuring point
- Visualization of the measured value memory (line recorder) and event logbook

For additional information about FieldCare, see Operating Instructions BA00027S and BA00059S

Source for device description files

See information → 77

Establishing a connection

1. Start FieldCare and launch the project.
2. In the network: Add a device.
   ↳ The **Add device** window opens.
3. Select the **CDI Communication TCP/IP** option from the list and press **OK** to confirm.
4. Right-click **CDI Communication TCP/IP** and select the **Add device** option in the context menu that opens.
5. Select the desired device from the list and press **OK** to confirm.
   ↳ The **CDI Communication TCP/IP (Configuration)** window opens.
6. Enter the device address in the **IP address** field: 192.168.1.212 and press **Enter** to confirm.
7. Establish the online connection to the device.

For additional information, see Operating Instructions BA00027S and BA00059S

User interface

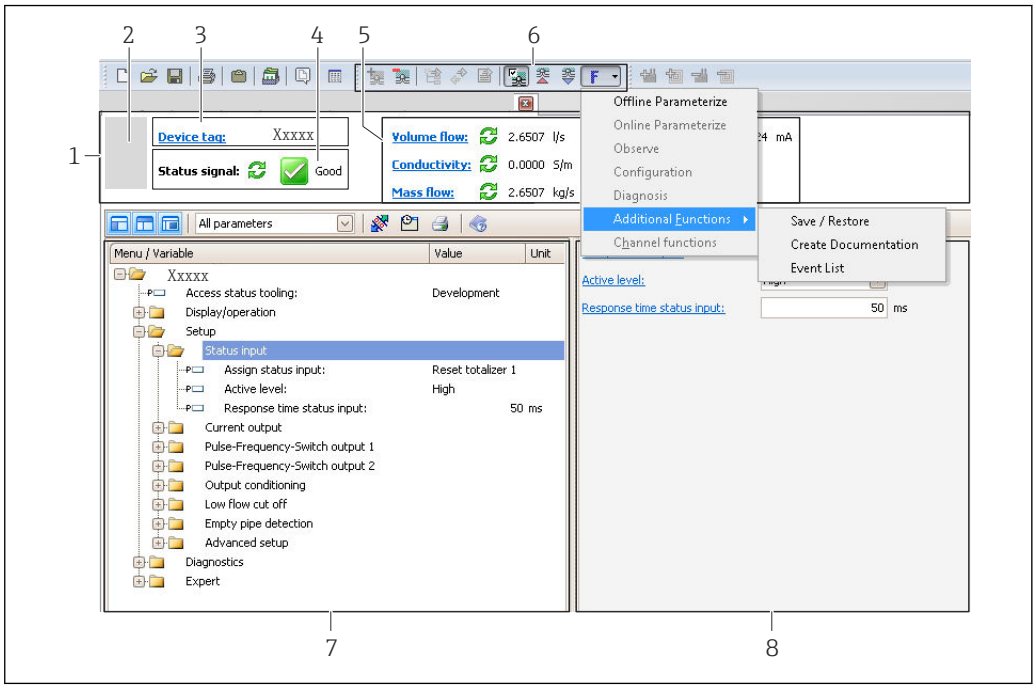

1 *Header*
2 *Picture of device*
3 *Tag name*
4 *Status area with status signal→ 127*
6 *Display area for current measured values*
5 *Edit toolbar with additional functions such as save/restore, event list and create documentation*
7 *Navigation area with operating menu structure*
8 *Working area*

8.5.4 DeviceCare

Function scope

Tool to connect and configure Endress+Hauser field devices.

The fastest way to configure Endress+Hauser field devices is with the dedicated "DeviceCare" tool. Together with the device type managers (DTMs) it presents a convenient, comprehensive solution.

For details, see Innovation Brochure IN01047S

Source for device description files

See information → 77

8.5.5 AMS Device Manager

Function scope

Program from Emerson Process Management for operating and configuring measuring devices via HART protocol.

Source for device description files

See data → 77

8.5.6 SIMATIC PDM

Function scope

SIMATIC PDM is a standardized, manufacturer-independent program from Siemens for the operation, configuration, maintenance and diagnosis of intelligent field devices via HART protocol.

Source for device description files

See data → 77

8.5.7 Field Communicator 475

Function scope

Industrial handheld terminal from Emerson Process Management for remote configuration and measured value display via HART protocol.

Source for device description files

See data → 77

9 System integration

9.1 Overview of device description files

9.1.1 Current version data for the device

Firmware version	02.00.zz	▪ On the title page of the Operating instructions ▪ On the transmitter nameplate ▪ Firmware version Diagnostics → Device information → Firmware version
Release date of firmware version	11.2016	---
Manufacturer ID	0x11	Manufacturer ID Diagnostics → Device information → Manufacturer ID
Device type ID	0x69	Device type Diagnostics → Device information → Device type
HART protocol revision	7	---
Device revision	8	▪ On the transmitter nameplate ▪ Device revision Diagnostics → Device information → Device revision

For an overview of the different firmware versions for the device → 139

9.1.2 Operating tools

The suitable device description file for the individual operating tools is listed in the table below, along with information on where the file can be acquired.

Operating tool via HART protocol	Sources for obtaining device descriptions
FieldCare	▪ www.endress.com → Download Area ▪ CD-ROM (contact Endress+Hauser) ▪ DVD (contact Endress+Hauser)
DeviceCare	▪ www.endress.com → Download Area ▪ CD-ROM (contact Endress+Hauser) ▪ DVD (contact Endress+Hauser)
▪ Field Xpert SFX350 ▪ Field Xpert SFX370	Use update function of handheld terminal
AMS Device Manager (Emerson Process Management)	www.endress.com → Download Area
SIMATIC PDM (Siemens)	www.endress.com → Download Area
Field Communicator 475 (Emerson Process Management)	Use update function of handheld terminal

9.2 Measured variables via HART protocol

The following measured variables (HART device variables) are assigned to the dynamic variables at the factory:

Dynamic variables	Measured values (HART device variables)
Primary dynamic variable (PV)	Volume flow
Secondary dynamic variable (SV)	Totalizer 1
Tertiary dynamic variable (TV)	Totalizer 2
Quaternary dynamic variable (QV)	Totalizer 3

The assignment of the measured variables to the dynamic variables can be modified and assigned as desired via local operation and the operating tool using the following parameters:

- Expert → Communication → HART output → Output → Assign PV
- Expert → Communication → HART output → Output → Assign SV
- Expert → Communication → HART output → Output → Assign TV
- Expert → Communication → HART output → Output → Assign QV

The following measured variables can be assigned to the dynamic variables:

Measured variables for PV (primary dynamic variable)
- Off
- Volume flow
- Mass flow
- Flow velocity
- Conductivity [1)]
- Corrected conductivity [1)]
- Electronic temperature

Measured variables for SV, TV, QV (secondary, tertiary and quaternary dynamic variable)
- Volume flow
- Mass flow
- Conductivity [2)]
- Corrected conductivity [2)]
- Electronic temperature
- Totalizer 1
- Totalizer 2
- Totalizer 3

Device variables
The device variables are permanently assigned. A maximum of 8 device variables can be transmitted:
- 0 = volume flow
- 1 = mass flow
- 2 = corrected volume flow
- 3 = flow velocity
- 4 = conductivity
- 5 = corrected conductivity
- 6 = temperature
- 7 = electronic temperature
- 9 = totalizer 1
- 10 = totalizer 2
- 11 = totalizer 3

1) Visibility depends on order options or device settings
2) Visibility depends on order options or device settings

9.3 Other settings

Burst mode functionality in accordance with HART 7 Specification:

Navigation
"Expert" menu → Communication → HART output → Burst configuration → Burst configuration 1 to n

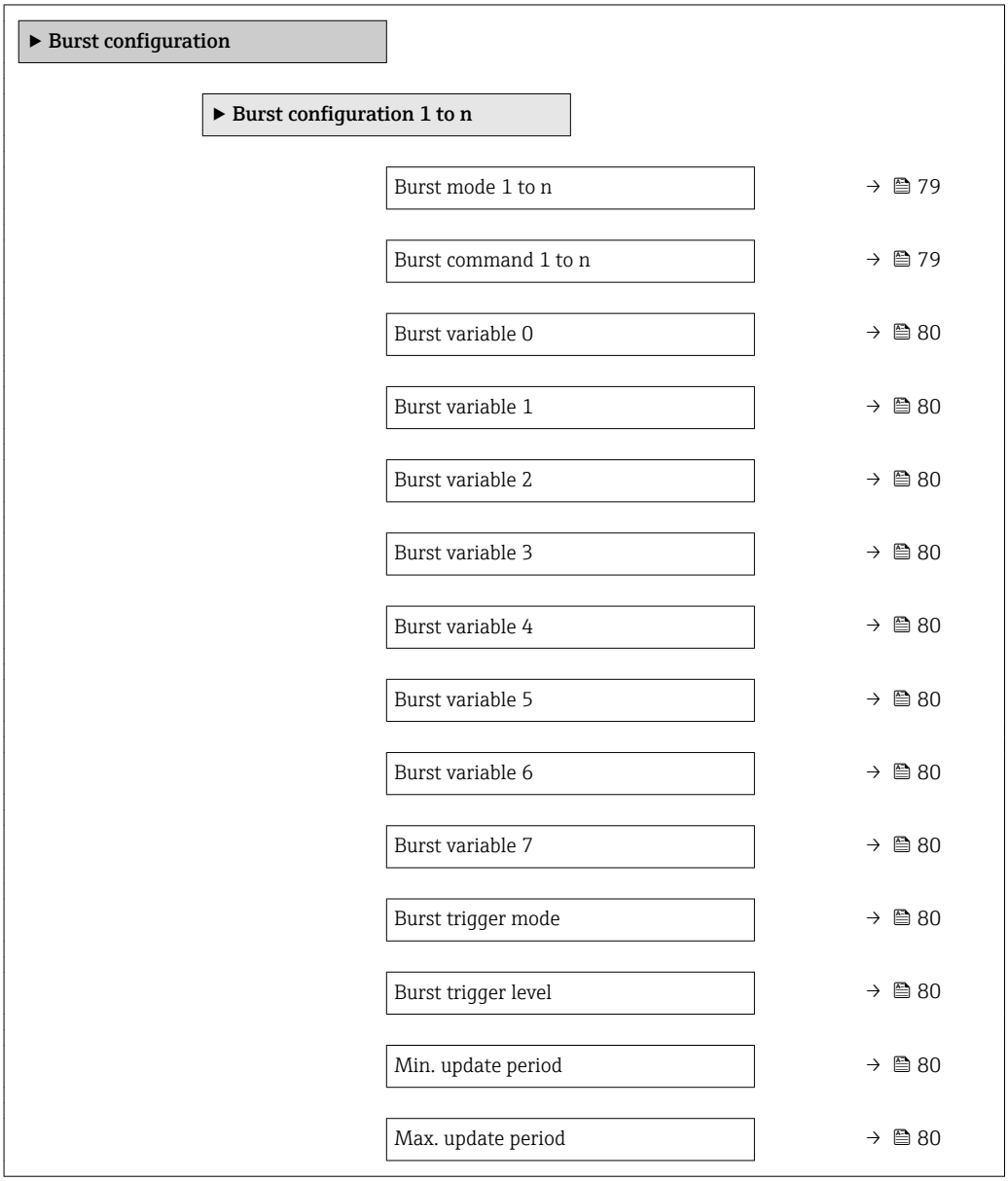

Parameter overview with brief description

Parameter	Description	Selection / User entry	Factory setting
Burst mode 1 to n	Activate the HART burst mode for burst message X.	▪ Off ▪ On	Off
Burst command 1 to n	Select the HART command that is sent to the HART master.	▪ Command 1 ▪ Command 2 ▪ Command 3 ▪ Command 9 ▪ Command 33 ▪ Command 48	Command 2

Parameter	Description	Selection / User entry	Factory setting
Burst variable 0	For HART command 9 and 33: select the HART device variable or the process variable.	▪ Volume flow ▪ Mass flow ▪ Corrected volume flow ▪ Flow velocity ▪ Conductivity * ▪ Corrected conductivity * ▪ Electronic temperature ▪ Totalizer 1 ▪ Totalizer 2 ▪ Totalizer 3 ▪ Density ▪ HART input ▪ Percent of range ▪ Measured current ▪ Primary variable (PV) ▪ Secondary variable (SV) ▪ Tertiary variable (TV) ▪ Quaternary variable (QV) ▪ Not used	Volume flow
Burst variable 1	For HART command 9 and 33: select the HART device variable or the process variable.	See the **Burst variable 0** parameter.	Not used
Burst variable 2	For HART command 9 and 33: select the HART device variable or the process variable.	See the **Burst variable 0** parameter.	Not used
Burst variable 3	For HART command 9 and 33: select the HART device variable or the process variable.	See the **Burst variable 0** parameter.	Not used
Burst variable 4	For HART command 9: select the HART device variable or the process variable.	See the **Burst variable 0** parameter.	Not used
Burst variable 5	For HART command 9: select the HART device variable or the process variable.	See the **Burst variable 0** parameter.	Not used
Burst variable 6	For HART command 9: select the HART device variable or the process variable.	See the **Burst variable 0** parameter.	Not used
Burst variable 7	For HART command 9: select the HART device variable or the process variable.	See the **Burst variable 0** parameter.	Not used
Burst trigger mode	Select the event that triggers burst message X.	▪ Continuous ▪ Window ▪ Rising ▪ Falling ▪ On change	Continuous
Burst trigger level	Enter the burst trigger value. Together with the option selected in the **Burst trigger mode** parameter the burst trigger value determines the time of burst message X.	Signed floating-point number	–
Min. update period	Enter the minimum time span between two burst commands of burst message X.	Positive integer	1 000 ms
Max. update period	Enter the maximum time span between two burst commands of burst message X.	Positive integer	2 000 ms

* Visibility depends on order options or device settings

10 Commissioning

10.1 Function check

Before commissioning the measuring device:

▶ Make sure that the post-installation and post-connection checks have been performed.

- "Post-installation check" checklist→ 37
- "Post-connection check" checklist → 50

10.2 Switching on the measuring device

▶ After a successful function check, switch on the measuring device.
  ↳ After a successful startup, the local display switches automatically from the startup display to the operational display.

If nothing appears on the local display or a diagnostic message is displayed, refer to the section on "Diagnostics and troubleshooting" → 121.

10.3 Setting the operating language

Factory setting: English or ordered local language

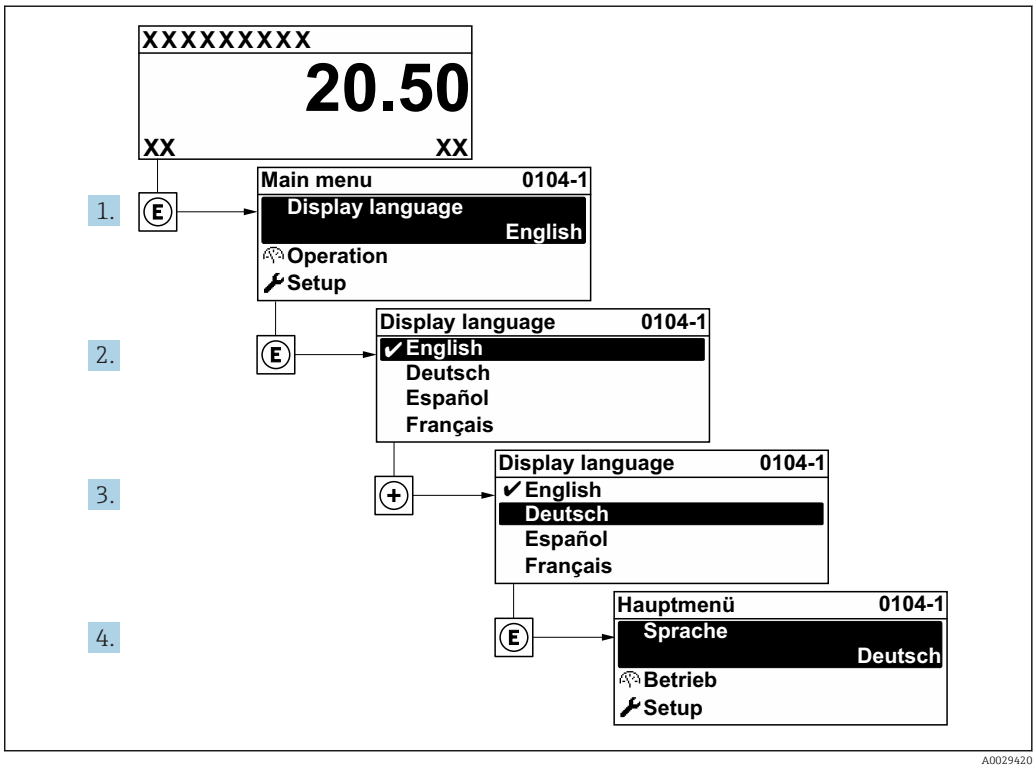

30 *Taking the example of the local display*

10.4 Configuring the measuring device

- The **Setup** menu with its guided wizards contains all the parameters needed for standard operation.
- Navigation to the **Setup** menu

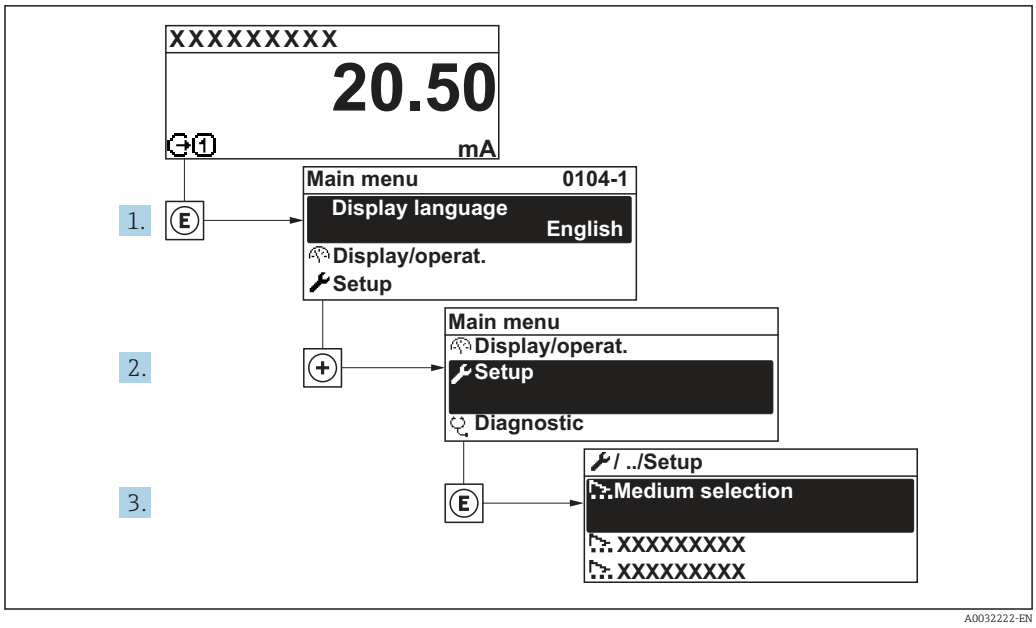

31 *Taking the example of the local display*

Navigation
"Setup" menu

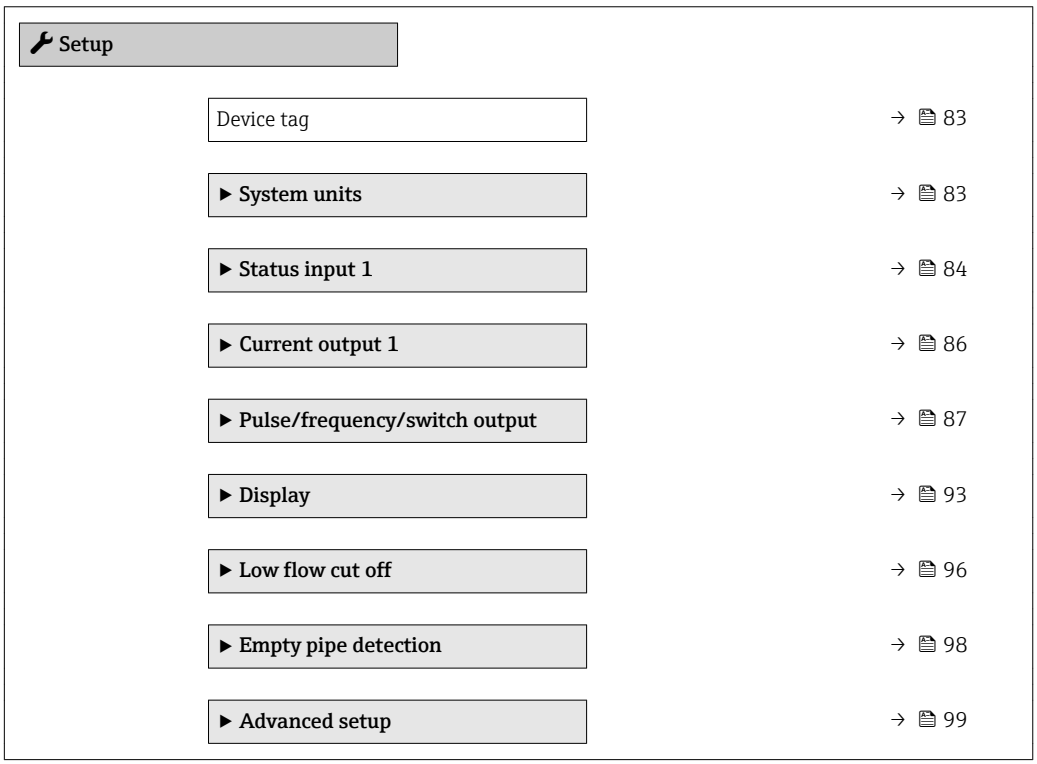

10.4.1 Defining the tag name

To enable fast identification of the measuring point within the system, you can enter a unique designation using the **Device tag** parameter and thus change the factory setting.

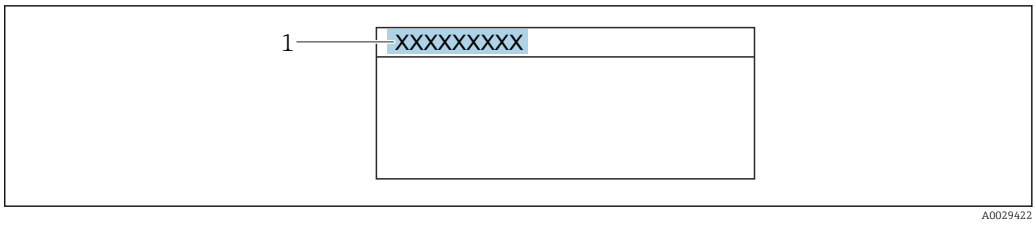

32 *Header of the operational display with tag name*

1 Tag name

Enter the tag name in the "FieldCare" operating tool → 75

Navigation
"Setup" menu → Device tag

Parameter overview with brief description

Parameter	Description	User entry	Factory setting
Device tag	Enter the name for the measuring point.	Max. 32 characters, such as letters, numbers or special characters (e.g. @, %, /).	Promag

10.4.2 Setting the system units

In the **System units** submenu the units of all the measured values can be set.

Depending on the device version, not all submenus and parameters are available in every device. The selection can vary depending on the order code.

Navigation
"Setup" menu → System units

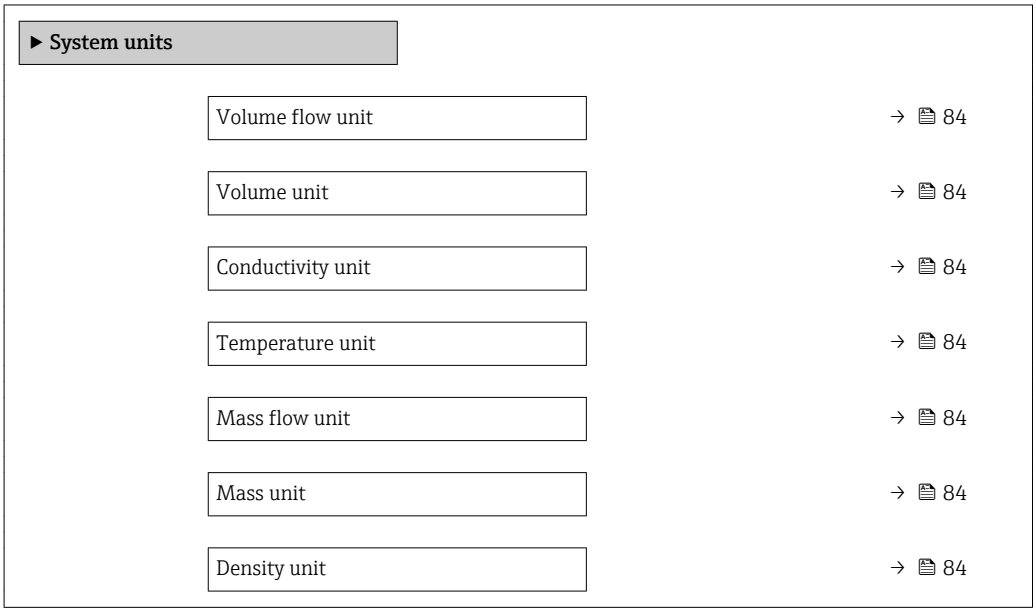

Parameter overview with brief description

Parameter	Prerequisite	Description	Selection	Factory setting
Volume flow unit	–	Select volume flow unit. *Result* The selected unit applies for: ▪ Output ▪ Low flow cut off ▪ Simulation process variable	Unit choose list	Country-specific: ▪ l/h ▪ gal/min (us)
Volume unit	–	Select volume unit.	Unit choose list	Country-specific: ▪ m^3 ▪ gal (us)
Conductivity unit	The **On** option is selected in the **Conductivity measurement** parameter parameter.	Select conductivity unit. *Effect* The selected unit applies for: ▪ Current output ▪ Frequency output ▪ Switch output ▪ Simulation process variable	Unit choose list	µS/cm
Temperature unit	–	Select temperature unit. *Result* The selected unit applies for: ▪ **Maximum value** parameter ▪ **Minimum value** parameter	Unit choose list	Country-specific: ▪ °C ▪ °F
Mass flow unit	–	Select mass flow unit. *Result* The selected unit applies for: ▪ Output ▪ Low flow cut off ▪ Simulation process variable	Unit choose list	Country-specific: ▪ kg/h ▪ lb/min
Mass unit	–	Select mass unit.	Unit choose list	Country-specific: ▪ kg ▪ lb
Density unit	–	Select density unit. *Result* The selected unit applies for: ▪ Output ▪ Simulation process variable	Unit choose list	Country-specific: ▪ kg/l ▪ lb/ft^3

10.4.3 Configuring the status input

The **Status input** submenu guides the user systematically through all the parameters that have to be set for configuring the status input.

The submenu appears only if the device was ordered with a status input .

Navigation

"Setup" menu → Status input

Structure of the submenu

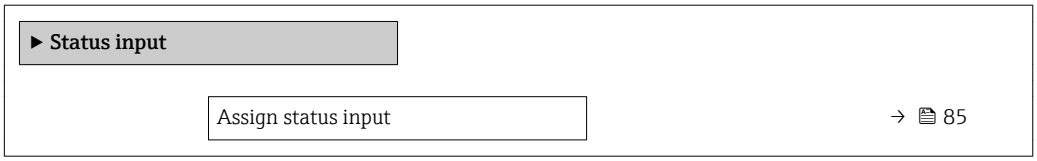

Active level	→ 85
Response time status input	→ 85

Parameter overview with brief description

Parameter	Description	Selection / User entry	Factory setting
Assign status input	Select function for the status input.	▪ Off ▪ Reset totalizer 1 ▪ Reset totalizer 2 ▪ Reset totalizer 3 ▪ Reset all totalizers ▪ Flow override	Off
Active level	Define input signal level at which the assigned function is triggered.	▪ High ▪ Low	High
Response time status input	Define the minimum amount of time the input signal level must be present before the selected function is triggered.	5 to 200 ms	50 ms

10.4.4 Configuring the current output

The **Current output** wizard guides you systematically through all the parameters that have to be set for configuring the current output.

Navigation
"Setup" menu → Current output 1

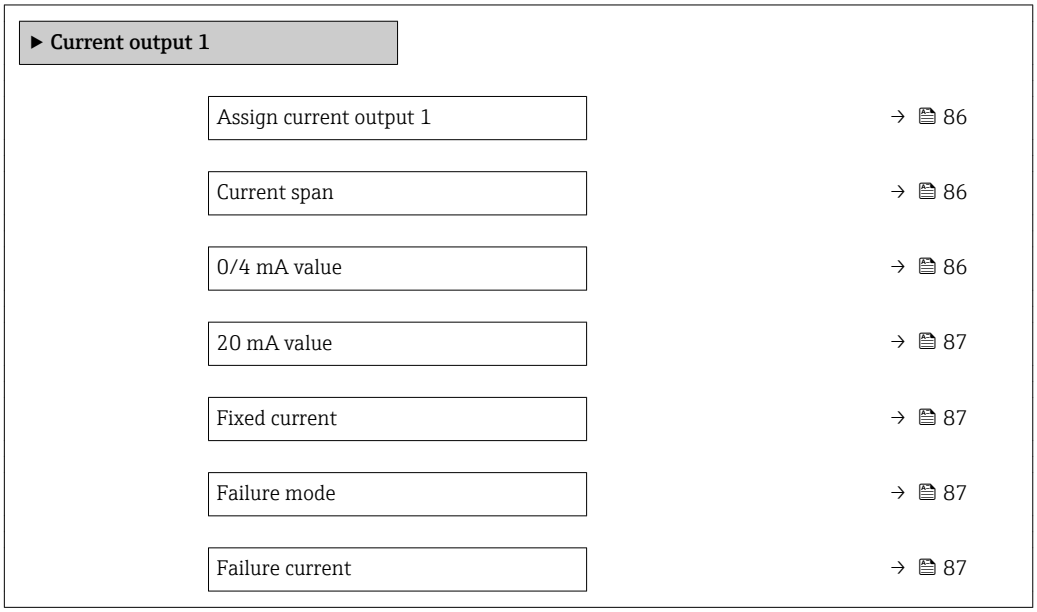

Parameter overview with brief description

Parameter	Prerequisite	Description	Selection / User entry	Factory setting
Assign current output	–	Select process variable for current output.	▪ Volume flow ▪ Mass flow ▪ Corrected volume flow ▪ Flow velocity ▪ Conductivity * ▪ Corrected conductivity * ▪ Temperature ▪ Electronic temperature	Volume flow
Current span	–	Select current range for process value output and upper/lower level for alarm signal.	▪ 4...20 mA NAMUR ▪ 4...20 mA US ▪ 4...20 mA ▪ 0...20 mA ▪ Fixed current	Country-specific: ▪ 4...20 mA NAMUR ▪ 4...20 mA US
0/4 mA value	One of the following options is selected in the **Current span** parameter (→ 86): ▪ 4...20 mA NAMUR ▪ 4...20 mA US ▪ 4...20 mA ▪ 0...20 mA	Enter 4 mA value.	Signed floating-point number	Country-specific: ▪ 0 l/h ▪ 0 gal/min (us)

Parameter	Prerequisite	Description	Selection / User entry	Factory setting
20 mA value	One of the following options is selected in the **Current span** parameter (→ 🖹 86): ▪ 4...20 mA NAMUR ▪ 4...20 mA US ▪ 4...20 mA ▪ 0...20 mA	Enter 20 mA value.	Signed floating-point number	Depends on country and nominal diameter
Fixed current	The **Fixed current** option is selected in the **Current span** parameter (→ 🖹 86).	Defines the fixed output current.	0 to 22.5 mA	22.5 mA
Failure mode	One of the following options is selected in the **Assign current output** parameter (→ 🖹 86): ▪ Volume flow ▪ Mass flow ▪ Flow velocity ▪ Conductivity * ▪ Corrected conductivity * ▪ Electronic temperature One of the following options is selected in the **Current span** parameter (→ 🖹 86): ▪ 4...20 mA NAMUR ▪ 4...20 mA US ▪ 4...20 mA ▪ 0...20 mA	Define output behavior in alarm condition.	▪ Min. ▪ Max. ▪ Last valid value ▪ Actual value ▪ Defined value	Max.
Failure current	The **Defined value** option is selected in the **Failure mode** parameter.	Enter current output value in alarm condition.	0 to 22.5 mA	22.5 mA

* Visibility depends on order options or device settings

10.4.5 Configuring the pulse/frequency/switch output

The **Pulse/frequency/switch output** wizard guides you systematically through all the parameters that can be set for configuring the selected output type.

Configuring the pulse output

Navigation

"Setup" menu → Pulse/frequency/switch output 1 to n

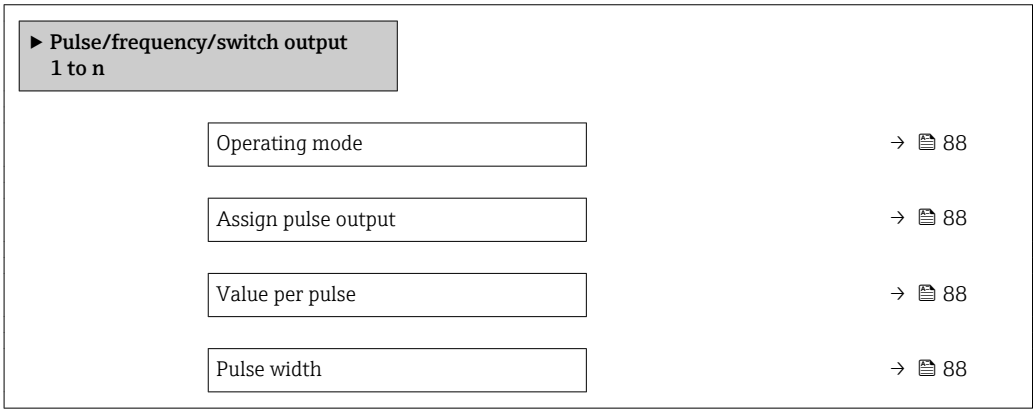

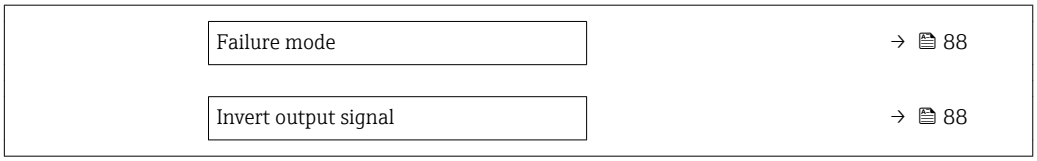

Parameter overview with brief description

Parameter	Prerequisite	Description	Selection / User entry	Factory setting
Operating mode	–	Define the output as a pulse, frequency or switch output.	▪ Pulse ▪ Frequency ▪ Switch	Pulse
Assign pulse output	The **Pulse** option is selected in the **Operating mode** parameter.	Select process variable for pulse output.	▪ Off ▪ Volume flow ▪ Mass flow ▪ Corrected volume flow	Off
Value per pulse	In the **Operating mode** parameter, the **Pulse** option is selected, and one of the following options is selected in the **Assign pulse output** parameter (→ 88): ▪ Mass flow ▪ Volume flow	Enter measured value at which a pulse is output.	Signed floating-point number	Depends on country and nominal diameter
Pulse width	In the **Operating mode** parameter, the **Pulse** option is selected, and one of the following options is selected in the **Assign pulse output** parameter (→ 88): ▪ Mass flow ▪ Volume flow	Define time width of the output pulse.	0.05 to 2 000 ms	100 ms
Failure mode	In the **Operating mode** parameter, the **Pulse** option is selected, and one of the following options is selected in the **Assign pulse output** parameter (→ 88): ▪ Mass flow ▪ Volume flow	Define output behavior in alarm condition.	▪ Actual value ▪ No pulses	No pulses
Invert output signal	–	Invert the output signal.	▪ No ▪ Yes	No

Configuring the frequency output

Navigation

"Setup" menu → Pulse/frequency/switch output 1 to n

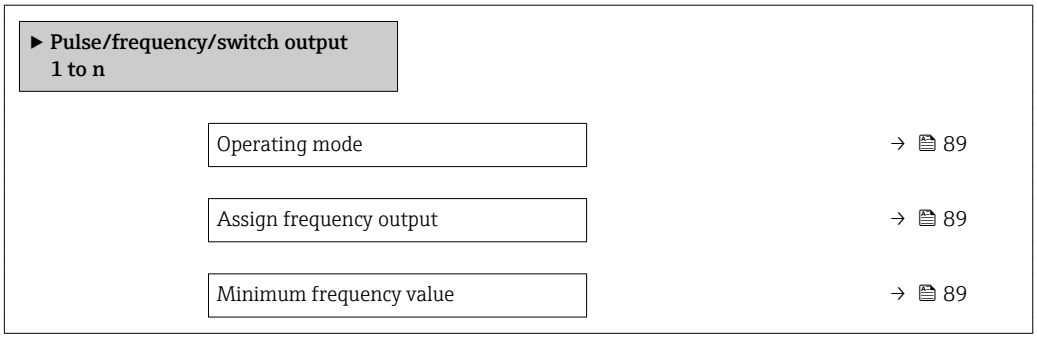

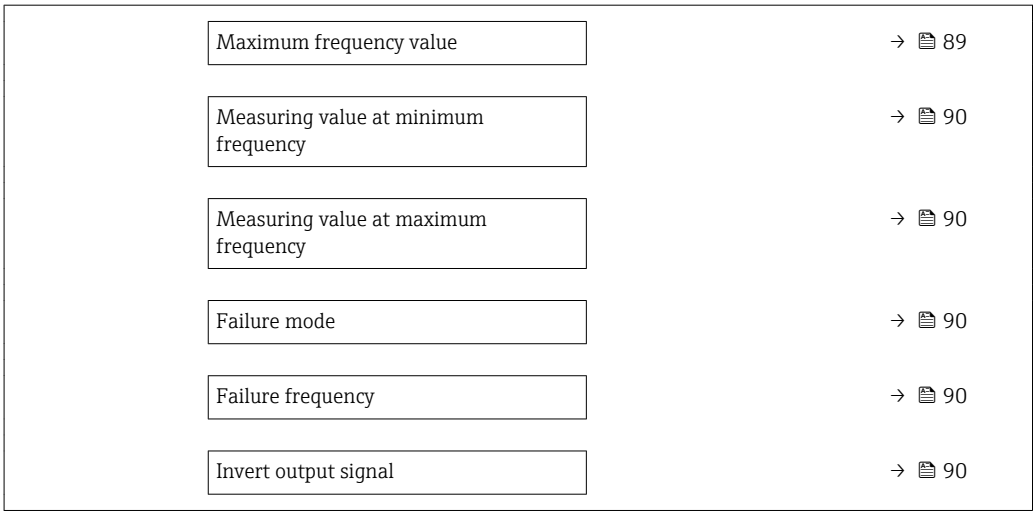

Parameter overview with brief description

Parameter	Prerequisite	Description	Selection / User entry	Factory setting
Operating mode	–	Define the output as a pulse, frequency or switch output.	▪ Pulse ▪ Frequency ▪ Switch	Pulse
Assign frequency output	The **Frequency** option is selected in the **Operating mode** parameter (→ 88).	Select process variable for frequency output.	▪ Off ▪ Volume flow ▪ Mass flow ▪ Corrected volume flow ▪ Flow velocity ▪ Conductivity * ▪ Corrected conductivity * ▪ Temperature ▪ Electronic temperature	Off
Minimum frequency value	In the **Operating mode** parameter, the **Frequency** option is selected, and one of the following options is selected in the **Assign frequency output** parameter (→ 89): ▪ Volume flow ▪ Mass flow ▪ Flow velocity ▪ Conductivity * ▪ Corrected conductivity * ▪ Electronic temperature	Enter minimum frequency.	0.0 to 12 500.0 Hz	0.0 Hz
Maximum frequency value	In the **Operating mode** parameter, the **Frequency** option is selected, and one of the following options is selected in the **Assign frequency output** parameter (→ 89): ▪ Volume flow ▪ Mass flow ▪ Flow velocity ▪ Conductivity * ▪ Corrected conductivity * ▪ Electronic temperature	Enter maximum frequency.	0.0 to 12 500.0 Hz	12 500.0 Hz

Parameter	Prerequisite	Description	Selection / User entry	Factory setting
Measuring value at minimum frequency	In the **Operating mode** parameter, the **Frequency** option is selected, and one of the following options is selected in the **Assign frequency output** parameter (→ 🖹 89): ▪ Volume flow ▪ Mass flow ▪ Flow velocity ▪ Conductivity * ▪ Corrected conductivity * ▪ Electronic temperature	Enter measured value for minmum frequency.	Signed floating-point number	Depends on country and nominal diameter
Measuring value at maximum frequency	In the **Operating mode** parameter, the **Frequency** option is selected, and one of the following options is selected in the **Assign frequency output** parameter (→ 🖹 89): ▪ Volume flow ▪ Mass flow ▪ Flow velocity ▪ Conductivity * ▪ Corrected conductivity * ▪ Electronic temperature	Enter measured value for maximum frequency.	Signed floating-point number	Depends on country and nominal diameter
Failure mode	In the **Operating mode** parameter, the **Frequency** option is selected, and one of the following options is selected in the **Assign frequency output** parameter (→ 🖹 89): ▪ Volume flow ▪ Mass flow ▪ Flow velocity ▪ Conductivity * ▪ Corrected conductivity * ▪ Electronic temperature	Define output behavior in alarm condition.	▪ Actual value ▪ Defined value ▪ 0 Hz	0 Hz
Failure frequency	In the **Operating mode** parameter, the **Frequency** option is selected, and one of the following options is selected in the **Assign frequency output** parameter (→ 🖹 89): ▪ Volume flow ▪ Mass flow ▪ Flow velocity ▪ Conductivity * ▪ Corrected conductivity * ▪ Electronic temperature	Enter frequency output value in alarm condition.	0.0 to 12 500.0 Hz	0.0 Hz
Invert output signal	–	Invert the output signal.	▪ No ▪ Yes	No

* Visibility depends on order options or device settings

Configuring the switch output

Navigation
"Setup" menu → Pulse/frequency/switch output 1 to n

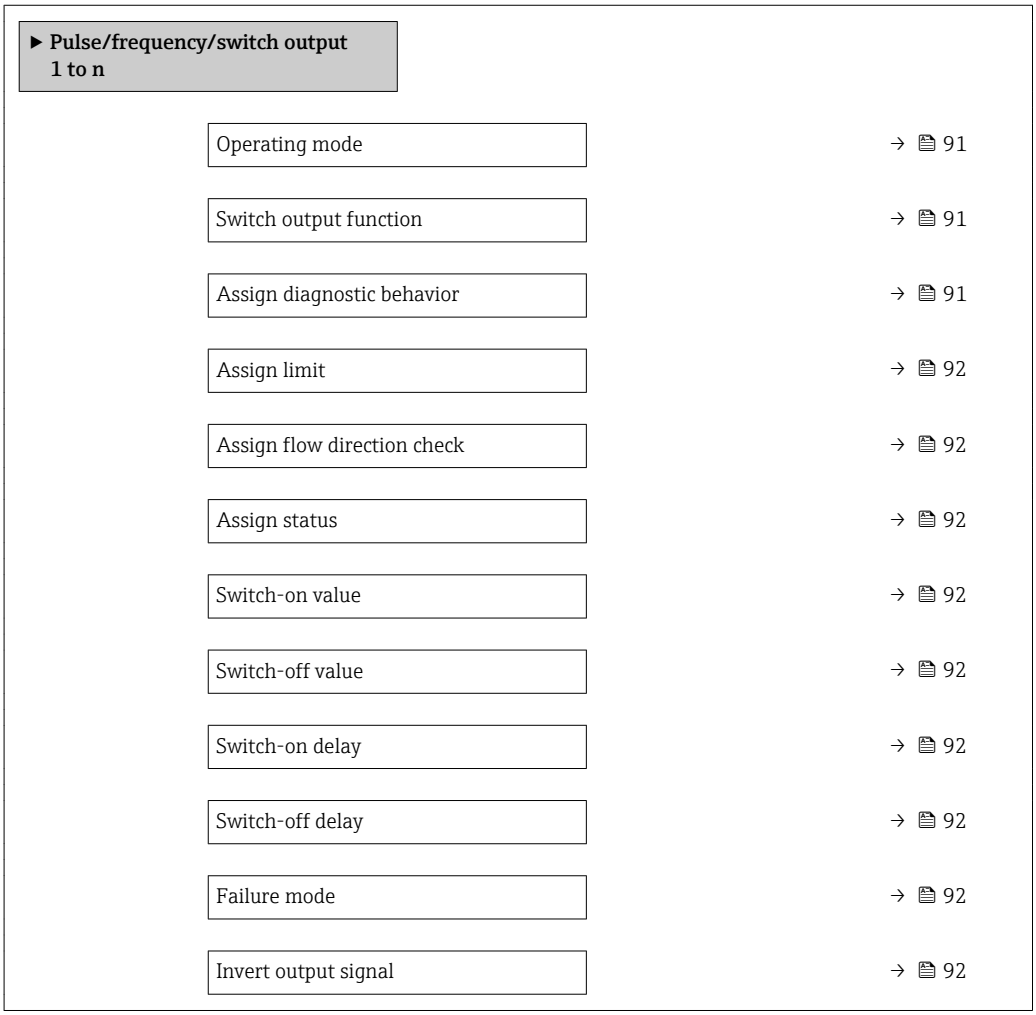

Parameter overview with brief description

Parameter	Prerequisite	Description	Selection / User entry	Factory setting
Operating mode	–	Define the output as a pulse, frequency or switch output.	▪ Pulse ▪ Frequency ▪ Switch	Pulse
Switch output function	The **Switch** option is selected in the **Operating mode** parameter.	Select function for switch output.	▪ Off ▪ On ▪ Diagnostic behavior ▪ Limit ▪ Flow direction check ▪ Status	Off
Assign diagnostic behavior	▪ In the **Operating mode** parameter, the **Switch** option is selected. ▪ In the **Switch output function** parameter, the **Diagnostic behavior** option is selected.	Select diagnostic behavior for switch output.	▪ Alarm ▪ Alarm or warning ▪ Warning	Alarm

Parameter	Prerequisite	Description	Selection / User entry	Factory setting
Assign limit	▪ The **Switch** option is selected in the **Operating mode** parameter. ▪ The **Limit** option is selected in the **Switch output function** parameter.	Select process variable for limit function.	▪ Off ▪ Volume flow ▪ Mass flow ▪ Corrected volume flow ▪ Flow velocity ▪ Conductivity * ▪ Corrected conductivity * ▪ Totalizer 1 ▪ Totalizer 2 ▪ Totalizer 3 ▪ Temperature ▪ Electronic temperature	Volume flow
Assign flow direction check	▪ The **Switch** option is selected in the **Operating mode** parameter. ▪ The **Flow direction check** option is selected in the **Switch output function** parameter.	Select process variable for flow direction monitoring.	▪ Off ▪ Volume flow ▪ Mass flow ▪ Corrected volume flow	Volume flow
Assign status	▪ The **Switch** option is selected in the **Operating mode** parameter. ▪ The **Status** option is selected in the **Switch output function** parameter.	Select device status for switch output.	▪ Empty pipe detection ▪ Low flow cut off	Empty pipe detection
Switch-on value	▪ In the **Operating mode** parameter, the **Switch** option is selected. ▪ In the **Switch output function** parameter, the **Limit** option is selected.	Enter measured value for the switch-on point.	Signed floating-point number	Country-specific: ▪ 0 l/h ▪ 0 gal/min (us)
Switch-off value	▪ In the **Operating mode** parameter, the **Switch** option is selected. ▪ In the **Switch output function** parameter, the **Limit** option is selected.	Enter measured value for the switch-off point.	Signed floating-point number	Country-specific: ▪ 0 l/h ▪ 0 gal/min (us)
Switch-on delay	▪ The **Switch** option is selected in the **Operating mode** parameter. ▪ The **Limit** option is selected in the **Switch output function** parameter.	Define delay for the switch-on of status output.	0.0 to 100.0 s	0.0 s
Switch-off delay	▪ The **Switch** option is selected in the **Operating mode** parameter. ▪ The **Limit** option is selected in the **Switch output function** parameter.	Define delay for the switch-off of status output.	0.0 to 100.0 s	0.0 s
Failure mode	–	Define output behavior in alarm condition.	▪ Actual status ▪ Open ▪ Closed	Open
Invert output signal	–	Invert the output signal.	▪ No ▪ Yes	No

* Visibility depends on order options or device settings

10.4.6 Configuring the local display

The **Display** wizard guides you systematically through all the parameters that can configured for configuring the local display.

Navigation
"Setup" menu → Display

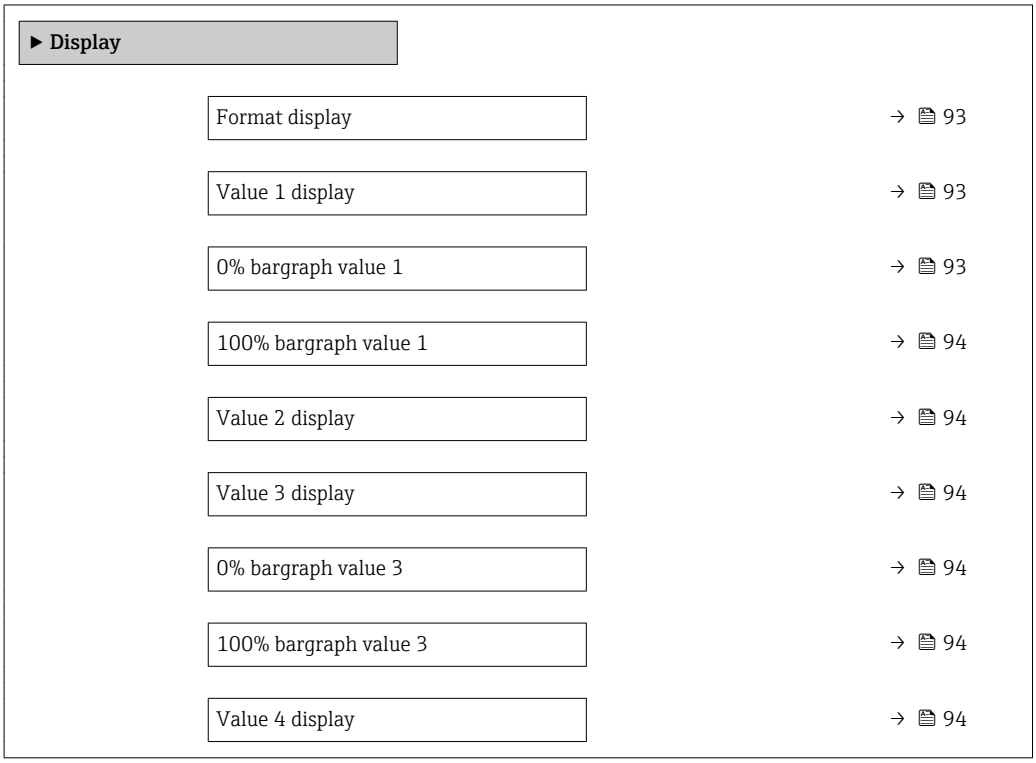

Parameter overview with brief description

Parameter	Prerequisite	Description	Selection / User entry	Factory setting
Format display	A local display is provided.	Select how measured values are shown on the display.	▪ 1 value, max. size ▪ 1 bargraph + 1 value ▪ 2 values ▪ 1 value large + 2 values ▪ 4 values	1 value, max. size
Value 1 display	A local display is provided.	Select the measured value that is shown on the local display.	▪ Volume flow ▪ Mass flow ▪ Corrected volume flow ▪ Flow velocity ▪ Conductivity ▪ Corrected conductivity ▪ Electronic temperature ▪ Totalizer 1 ▪ Totalizer 2 ▪ Totalizer 3 ▪ Current output 1 *	Volume flow
0% bargraph value 1	A local display is provided.	Enter 0% value for bar graph display.	Signed floating-point number	Country-specific: ▪ 0 l/h ▪ 0 gal/min (us)

Parameter	Prerequisite	Description	Selection / User entry	Factory setting
100% bargraph value 1	A local display is provided.	Enter 100% value for bar graph display.	Signed floating-point number	Depends on country and nominal diameter
Value 2 display	A local display is provided.	Select the measured value that is shown on the local display.	▪ None ▪ Volume flow ▪ Mass flow ▪ Corrected volume flow ▪ Flow velocity ▪ Conductivity ▪ Corrected conductivity ▪ Electronic temperature ▪ Totalizer 1 ▪ Totalizer 2 ▪ Totalizer 3 ▪ Current output 1	None
Value 3 display	A local display is provided.	Select the measured value that is shown on the local display.	For the picklist, see the **Value 2 display** parameter (→ 🖹 94)	None
0% bargraph value 3	A selection was made in the **Value 3 display** parameter.	Enter 0% value for bar graph display.	Signed floating-point number	Country-specific: ▪ 0 l/h ▪ 0 gal/min (us)
100% bargraph value 3	A selection was made in the **Value 3 display** parameter.	Enter 100% value for bar graph display.	Signed floating-point number	0
Value 4 display	A local display is provided.	Select the measured value that is shown on the local display.	For the picklist, see the **Value 2 display** parameter (→ 🖹 94)	None

* Visibility depends on order options or device settings

10.4.7 Configuring the output conditioning

The **Output conditioning** wizard guides you systematically through all the parameters that have to be set for configuring the output conditioning.

Navigation

"Setup" menu → Output conditioning

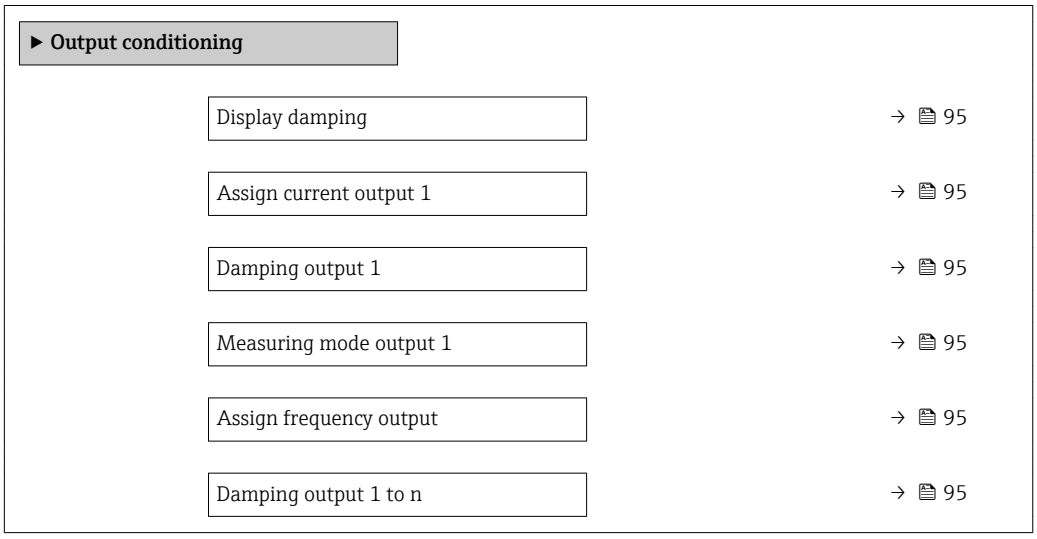

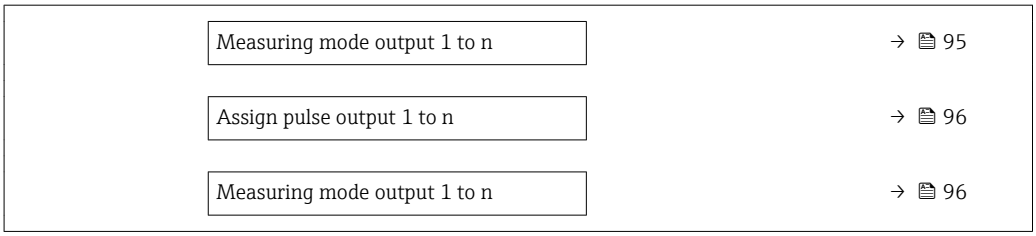

Parameter overview with brief description

Parameter	Prerequisite	Description	User entry / Selection	Factory setting
Display damping	–	Set display reaction time to fluctuations in the measured value.	0.0 to 999.9 s	0.0 s
Assign current output	–	Select process variable for current output.	▪ Volume flow ▪ Mass flow ▪ Corrected volume flow ▪ Flow velocity ▪ Conductivity * ▪ Corrected conductivity * ▪ Temperature ▪ Electronic temperature	Volume flow
Damping output 1	–	Set reaction time for output signal to fluctuations in the measured value.	0 to 999.9 s	1 s
Measuring mode output 1	–	Select measuring mode for output.	▪ Forward flow ▪ Forward/Reverse flow ▪ Reverse flow compensation	Forward flow
Assign frequency output	The **Frequency** option is selected in the **Operating mode** parameter (→ 88).	Select process variable for frequency output.	▪ Off ▪ Volume flow ▪ Mass flow ▪ Corrected volume flow ▪ Flow velocity ▪ Conductivity * ▪ Corrected conductivity * ▪ Temperature ▪ Electronic temperature	Off
Damping output 1 to n	–	Set reaction time for output signal to fluctuations in the measured value.	0 to 999.9 s	1 s
Measuring mode output 1 to n	–	Select measuring mode for output.	▪ Forward flow ▪ Forward/Reverse flow ▪ Reverse flow ▪ Reverse flow compensation	Forward flow

Parameter	Prerequisite	Description	User entry / Selection	Factory setting
Assign pulse output	The **Pulse** option is selected in the **Operating mode** parameter.	Select process variable for pulse output.	▪ Off ▪ Volume flow ▪ Mass flow ▪ Corrected volume flow	Off
Measuring mode output 1 to n	–	Select measuring mode for output.	▪ Forward flow ▪ Forward/Reverse flow ▪ Reverse flow ▪ Reverse flow compensation	Forward flow

* Visibility depends on order options or device settings

10.4.8 Configuring the low flow cut off

The **Low flow cut off** wizard systematically guides the user through all the parameters that must be set to configure low flow cut off.

Navigation

"Setup" menu → Low flow cut off

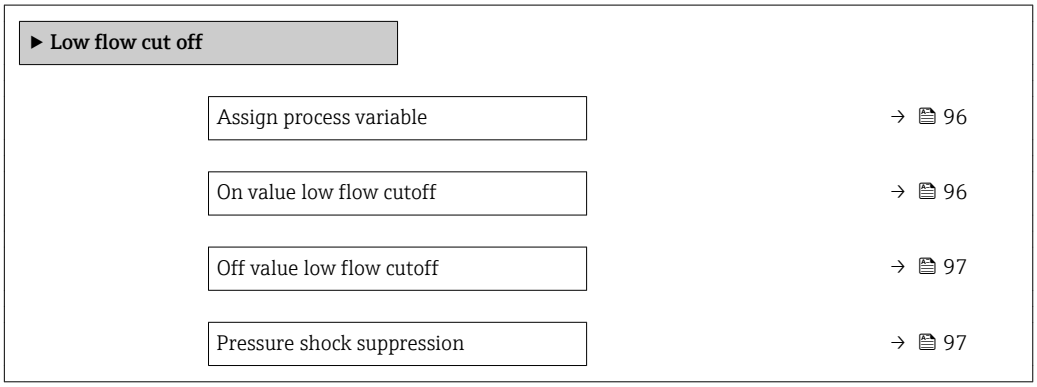

Parameter overview with brief description

Parameter	Prerequisite	Description	Selection / User entry	Factory setting
Assign process variable	–	Select process variable for low flow cut off.	▪ Off ▪ Volume flow ▪ Mass flow ▪ Corrected volume flow	Volume flow
On value low flow cutoff	One of the following options is selected in the **Assign process variable** parameter (→ 96): ▪ Volume flow ▪ Mass flow	Enter on value for low flow cut off.	Positive floating-point number	Depends on country and nominal diameter

Parameter	Prerequisite	Description	Selection / User entry	Factory setting
Off value low flow cutoff	One of the following options is selected in the **Assign process variable** parameter (→ 🖹 96): ▪ Volume flow ▪ Mass flow	Enter off value for low flow cut off.	0 to 100.0 %	50 %
Pressure shock suppression	One of the following options is selected in the **Assign process variable** parameter (→ 🖹 96): ▪ Volume flow ▪ Mass flow	Enter time frame for signal suppression (= active pressure shock suppression).	0 to 100 s	0 s

10.4.9 Configuring empty pipe detection

The **Empty pipe detection** wizard guides you systematically through all the parameters that have to be set for configuring empty pipe detection.

Navigation

"Setup" menu → Empty pipe detection

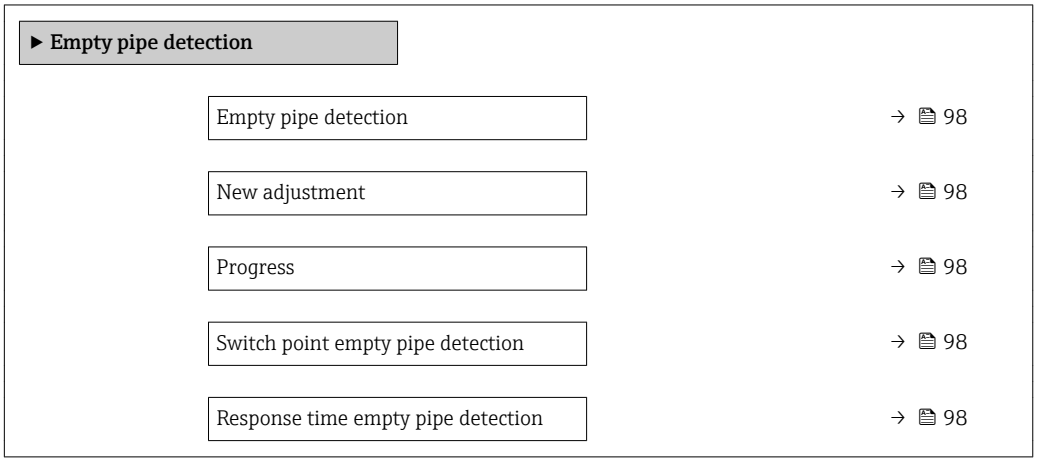

Parameter overview with brief description

Parameter	Prerequisite	Description	Selection / User interface / User entry	Factory setting
Empty pipe detection	–	Switch empty pipe detection on and off.	▪ Off ▪ On	Off
New adjustment	The **On** option is selected in the **Empty pipe detection** parameter.	Select type of adjustment.	▪ Cancel ▪ Empty pipe adjust ▪ Full pipe adjust	Cancel
Progress	The **On** option is selected in the **Empty pipe detection** parameter.	Shows the progress.	▪ Ok ▪ Busy ▪ Not ok	–
Switch point empty pipe detection	The **On** option is selected in the **Empty pipe detection** parameter.	Enter hysteresis in %, below this value the measuring tube will detected as empty.	0 to 100 %	50 %
Response time empty pipe detection	In the **Empty pipe detection** parameter (→ 98), the **On** option is selected.	Enter the time before diagnostic message S862 "Pipe empty" is displayed for empty pipe detection.	0 to 100 s	1 s

10.5 Advanced settings

The **Advanced setup** submenu together with its submenus contains parameters for specific settings.

Navigation to the "Advanced setup" submenu

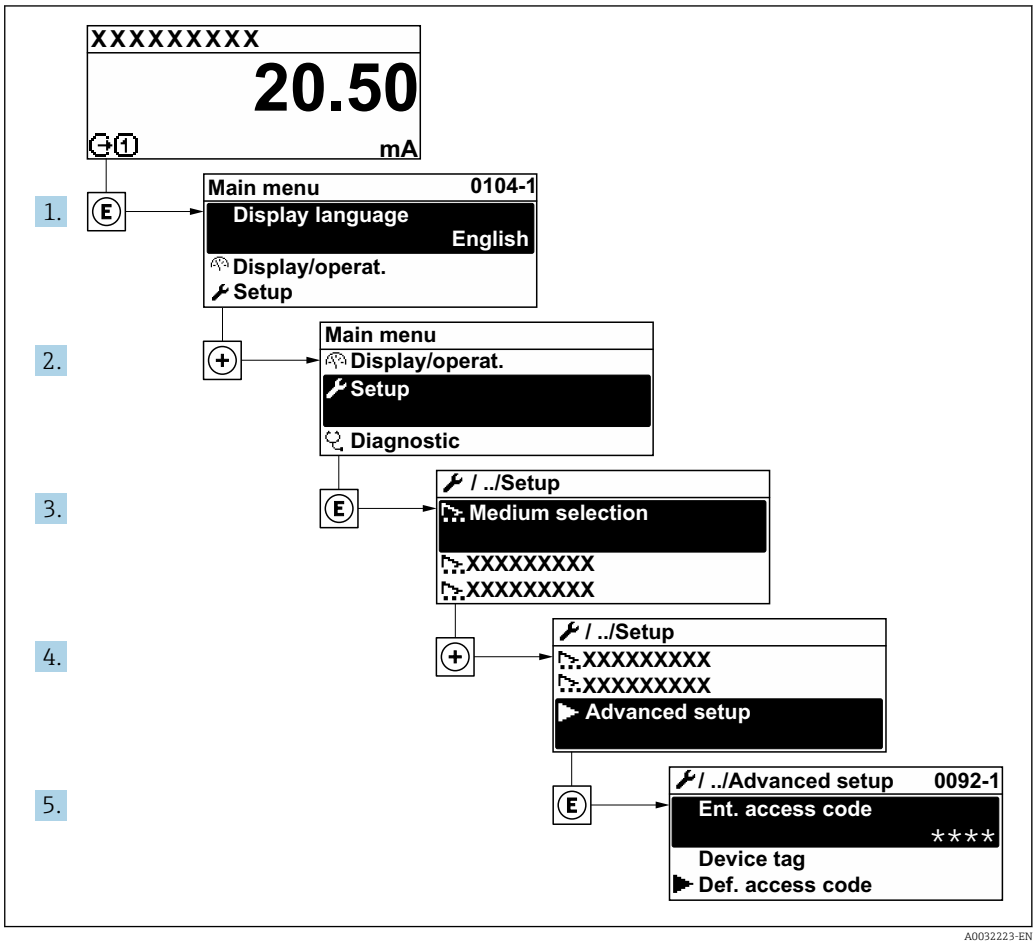

A0032223-EN

Depending on the device version, not all submenus and parameters are available in every device. The selection can vary depending on the order code.

Navigation

"Setup" menu → Advanced setup

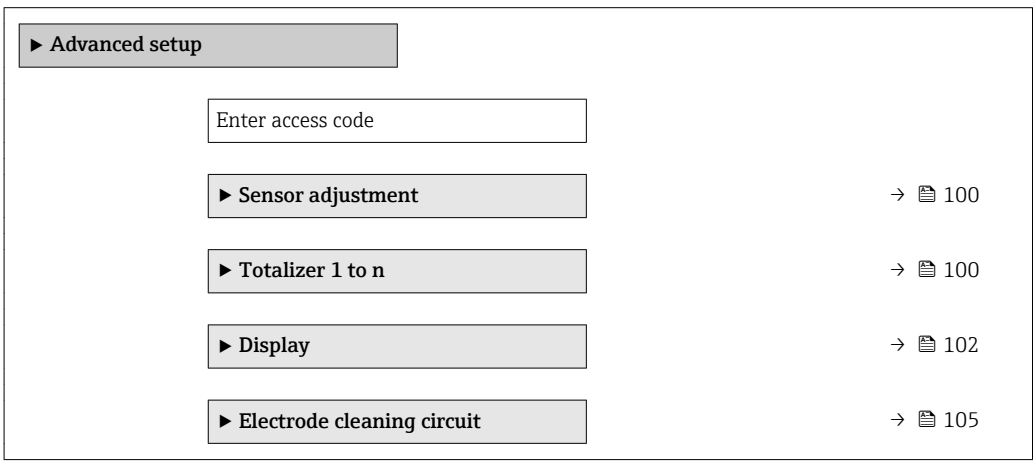

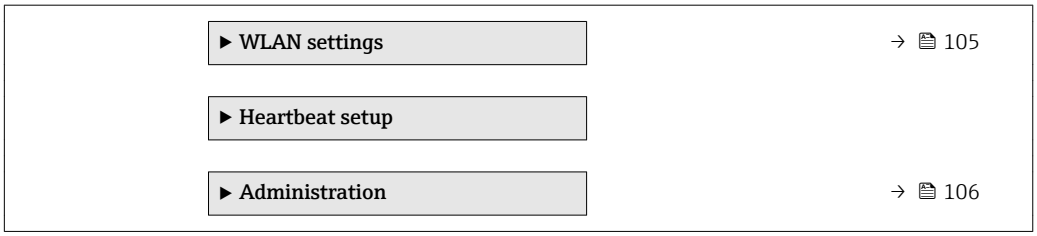

10.5.1 Carrying out a sensor adjustment

The **Sensor adjustment** submenu contains parameters that pertain to the functionality of the sensor.

Navigation
"Setup" menu → Advanced setup → Sensor adjustment

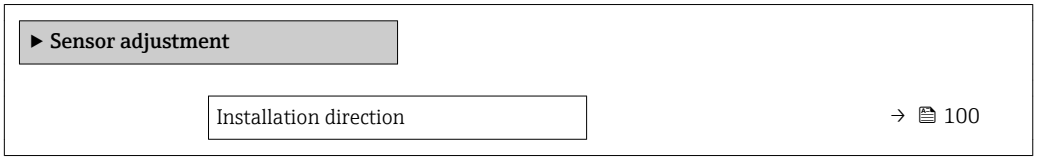

Parameter overview with brief description

Parameter	Description	Selection	Factory setting
Installation direction	Set sign of flow direction to match the direction of the arrow on the sensor.	▪ Flow in arrow direction ▪ Flow against arrow direction	Flow in arrow direction

10.5.2 Configuring the totalizer

In the **"Totalizer 1 to n" submenu** the individual totalizer can be configured.

Navigation
"Setup" menu → Advanced setup → Totalizer 1 to n

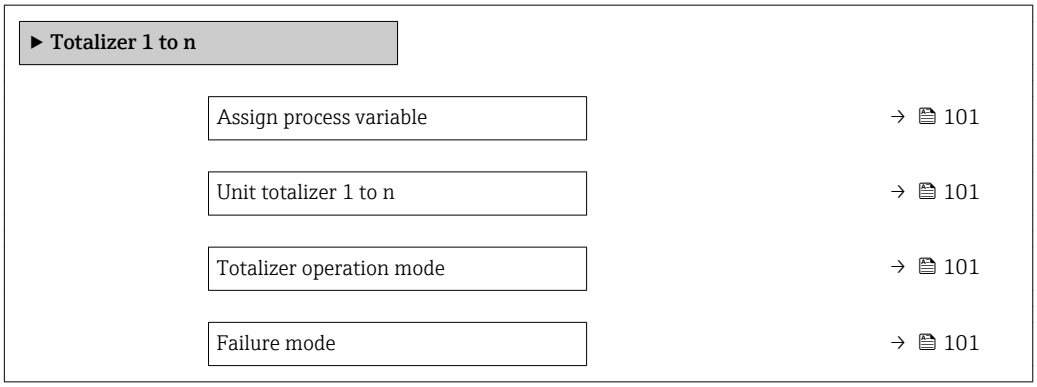

Parameter overview with brief description

Parameter	Prerequisite	Description	Selection	Factory setting
Assign process variable	–	Select process variable for totalizer.	▪ Off ▪ Volume flow ▪ Mass flow ▪ Corrected volume flow	Volume flow
Unit totalizer 1 to n	One of the following options is selected in the **Assign process variable** parameter (→ 101) of the **Totalizer 1 to n** submenu: ▪ Volume flow ▪ Mass flow	Select process variable totalizer unit.	Unit choose list	Country-specific: ▪ l ▪ gal (us)
Totalizer operation mode	One of the following options is selected in the **Assign process variable** parameter (→ 101) of the **Totalizer 1 to n** submenu: ▪ Volume flow ▪ Mass flow	Select totalizer calculation mode.	▪ Net flow total ▪ Forward flow total ▪ Reverse flow total	Net flow total
Failure mode	One of the following options is selected in the **Assign process variable** parameter (→ 101) of the **Totalizer 1 to n** submenu: ▪ Volume flow ▪ Mass flow	Define totalizer behavior in alarm condition.	▪ Stop ▪ Actual value ▪ Last valid value	Stop

10.5.3 Carrying out additional display configurations

In the **Display** submenu you can set all the parameters associated with the configuration of the local display.

Navigation
"Setup" menu → Advanced setup → Display

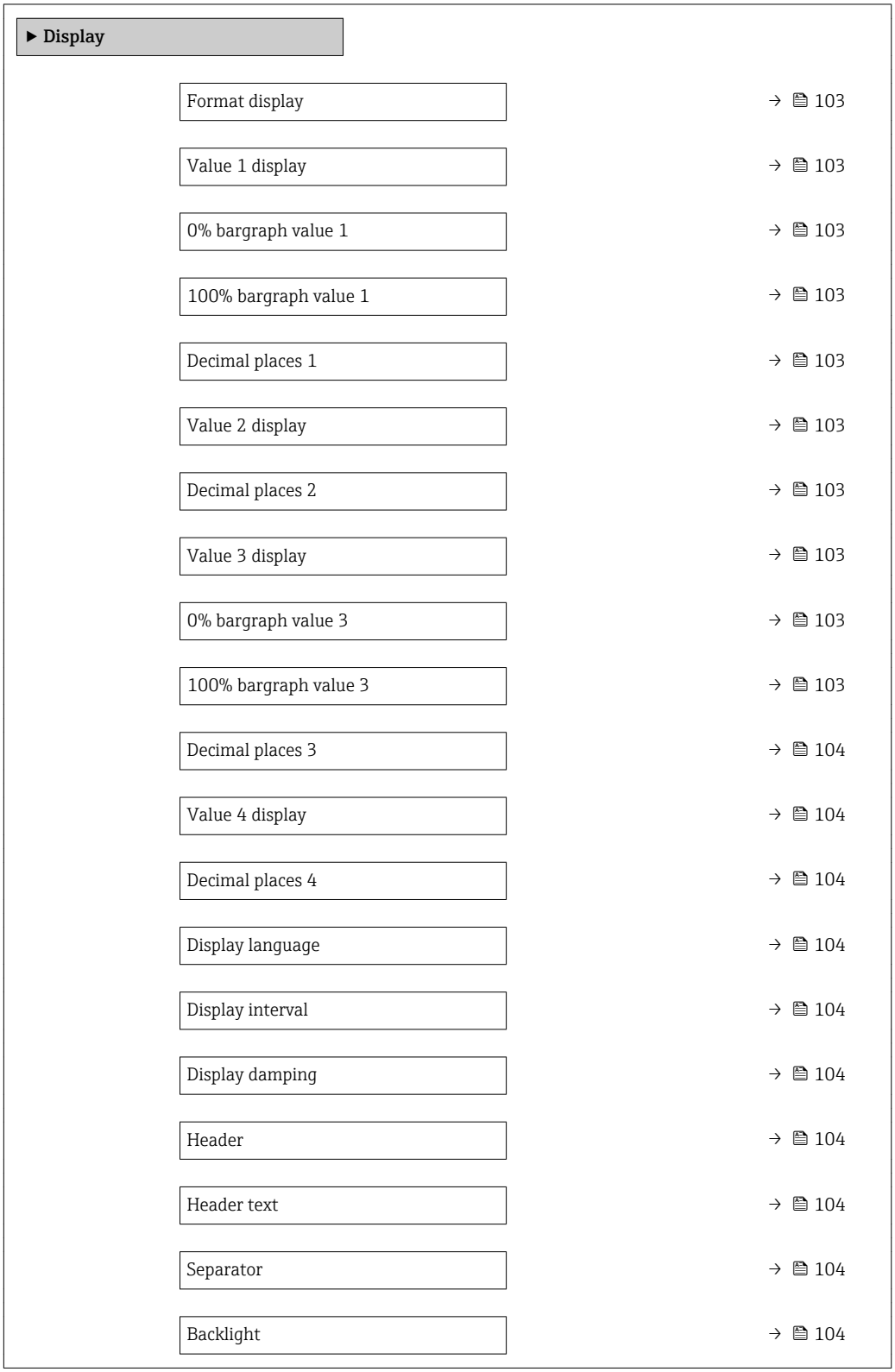

Parameter overview with brief description

Parameter	Prerequisite	Description	Selection / User entry	Factory setting
Format display	A local display is provided.	Select how measured values are shown on the display.	▪ 1 value, max. size ▪ 1 bargraph + 1 value ▪ 2 values ▪ 1 value large + 2 values ▪ 4 values	1 value, max. size
Value 1 display	A local display is provided.	Select the measured value that is shown on the local display.	▪ Volume flow ▪ Mass flow ▪ Corrected volume flow ▪ Flow velocity ▪ Conductivity ▪ Corrected conductivity ▪ Electronic temperature ▪ Totalizer 1 ▪ Totalizer 2 ▪ Totalizer 3 ▪ Current output 1 *	Volume flow
0% bargraph value 1	A local display is provided.	Enter 0% value for bar graph display.	Signed floating-point number	Country-specific: ▪ 0 l/h ▪ 0 gal/min (us)
100% bargraph value 1	A local display is provided.	Enter 100% value for bar graph display.	Signed floating-point number	Depends on country and nominal diameter
Decimal places 1	A measured value is specified in the **Value 1 display** parameter.	Select the number of decimal places for the display value.	▪ x ▪ x.x ▪ x.xx ▪ x.xxx ▪ x.xxxx	x.xx
Value 2 display	A local display is provided.	Select the measured value that is shown on the local display.	▪ None ▪ Volume flow ▪ Mass flow ▪ Corrected volume flow ▪ Flow velocity ▪ Conductivity ▪ Corrected conductivity ▪ Electronic temperature ▪ Totalizer 1 ▪ Totalizer 2 ▪ Totalizer 3 ▪ Current output 1	None
Decimal places 2	A measured value is specified in the **Value 2 display** parameter.	Select the number of decimal places for the display value.	▪ x ▪ x.x ▪ x.xx ▪ x.xxx ▪ x.xxxx	x.xx
Value 3 display	A local display is provided.	Select the measured value that is shown on the local display.	For the picklist, see the **Value 2 display** parameter (→ 🖹 94)	None
0% bargraph value 3	A selection was made in the **Value 3 display** parameter.	Enter 0% value for bar graph display.	Signed floating-point number	Country-specific: ▪ 0 l/h ▪ 0 gal/min (us)
100% bargraph value 3	A selection was made in the **Value 3 display** parameter.	Enter 100% value for bar graph display.	Signed floating-point number	0

Parameter	Prerequisite	Description	Selection / User entry	Factory setting
Decimal places 3	A measured value is specified in the **Value 3 display** parameter.	Select the number of decimal places for the display value.	▪ x ▪ x.x ▪ x.xx ▪ x.xxx ▪ x.xxxx	x.xx
Value 4 display	A local display is provided.	Select the measured value that is shown on the local display.	For the picklist, see the **Value 2 display** parameter (→ 🖹 94)	None
Decimal places 4	A measured value is specified in the **Value 4 display** parameter.	Select the number of decimal places for the display value.	▪ x ▪ x.x ▪ x.xx ▪ x.xxx ▪ x.xxxx	x.xx
Display language	A local display is provided.	Set display language.	▪ English ▪ Deutsch * ▪ Français * ▪ Español * ▪ Italiano * ▪ Nederlands * ▪ Portuguesa * ▪ Polski * ▪ русский язык (Russian) * ▪ Svenska * ▪ Türkçe * ▪ 中文 (Chinese) * ▪ 日本語 (Japanese) * ▪ 한국어 (Korean) * ▪ العَرَبيّة (Arabic) * ▪ Bahasa Indonesia * ▪ ภาษาไทย (Thai) * ▪ tiếng Việt (Vietnamese) * ▪ čeština (Czech) *	English (alternatively, the ordered language is preset in the device)
Display interval	A local display is provided.	Set time measured values are shown on display if display alternates between values.	1 to 10 s	5 s
Display damping	A local display is provided.	Set display reaction time to fluctuations in the measured value.	0.0 to 999.9 s	0.0 s
Header	A local display is provided.	Select header contents on local display.	▪ Device tag ▪ Free text	Device tag
Header text	In the **Header** parameter, the **Free text** option is selected.	Enter display header text.	Max. 12 characters such as letters, numbers or special characters (e.g. @, %, /)	----------
Separator	A local display is provided.	Select decimal separator for displaying numerical values.	▪ . (point) ▪ , (comma)	. (point)
Backlight	A local display is provided.	Switch the local display backlight on and off.	▪ Disable ▪ Enable	Enable

* Visibility depends on order options or device settings

10.5.4 Performing electrode cleaning

The **Electrode cleaning circuit** wizard guides the user systematically through all the parameters that have to be set for configuring electrode cleaning.

The wizard only appears if the device was ordered with an electrode cleaning circuit.

Navigation
"Setup" menu → Advanced setup → Electrode cleaning circuit

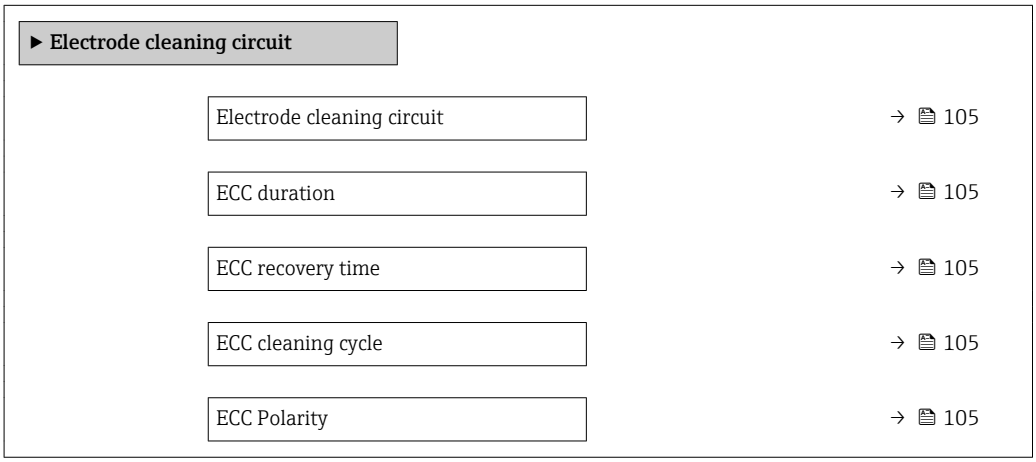

Parameter overview with brief description

Parameter	Prerequisite	Description	Selection / User entry / User interface	Factory setting
Electrode cleaning circuit	For the following order code: "Application package", option **EC** "ECC electrode cleaning"	Enable the cyclic electrode cleaning circuit.	▪ Off ▪ On	Off
ECC duration	For the following order code: "Application package", option **EC** "ECC electrode cleaning"	Enter the duration of electrode cleaning in seconds.	0.01 to 30 s	2 s
ECC recovery time	For the following order code: "Application package", option **EC** "ECC electrode cleaning"	Define recovery time after electrode cleaning. During this time the current output values will be held at last valid value.	1 to 600 s	5 s
ECC cleaning cycle	For the following order code: "Application package", option **EC** "ECC electrode cleaning"	Enter the pause duration between electrode cleaning cycles.	0.5 to 168 h	0.66 h
ECC Polarity	For the following order code: "Application package", option **EC** "ECC electrode cleaning"	Select the polarity of the electrode cleaning circuit.	▪ Positive ▪ Negative	Depends on the electrode material: ▪ Platinum: **Negative** option ▪ Tantalum, Alloy C22, stainless steel: **Positive** option

10.5.5 WLAN configuration

The **WLAN Settings** submenu guides the user systematically through all the parameters that have to be set for the WLAN configuration.

Navigation
"Setup" menu → Advanced setup → WLAN Settings

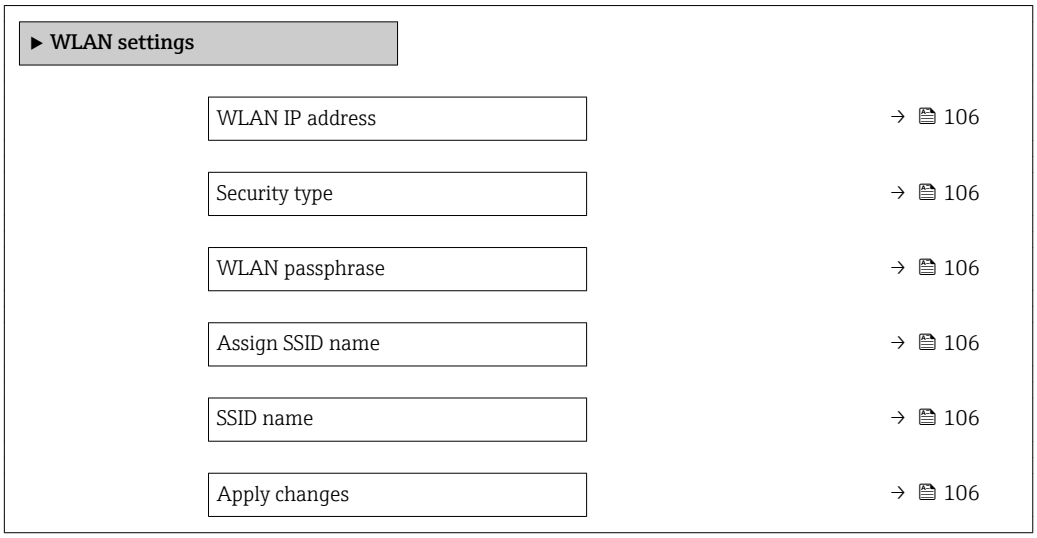

Parameter overview with brief description

Parameter	Prerequisite	Description	User entry / Selection	Factory setting
WLAN IP address	–	Enter IP address of the device WLAN interface.	4 octet: 0 to 255 (in the particular octet)	192.168.1.212
Security type	–	Select the security type of the WLAN interface.	▪ Unsecured ▪ WPA2-PSK	WPA2-PSK
WLAN passphrase	In the **Security type** parameter, the **WPA2-PSK** option is selected.	Enter the network key (8 to 32 characters). The network key supplied with the device should be changed during commissioning for security reasons.	8 to 32-digit character string comprising numbers, letters and special characters	Serial number of the measuring device (e.g. L100A802000)
Assign SSID name	–	Select which name will be used for SSID: device tag or user-defined name.	▪ Device tag ▪ User-defined	User-defined
SSID name	In the **Assign SSID name** parameter, the **User-defined** option is selected.	Enter the user-defined SSID name (max. 32 characters). The user-defined SSID name may only be assigned once. If the SSID name is assigned more than once, the devices can interfere with one another.	Max. 32-digit character string comprising numbers, letters and special characters	
Apply changes	–	Use changed WLAN settings.	▪ Cancel ▪ Ok	Cancel

10.5.6 Using parameters for device administration

The **Administration** submenu systematically guides the user through all the parameters that can be used for device administration purposes.

Navigation
"Setup" menu → Advanced setup → Administration

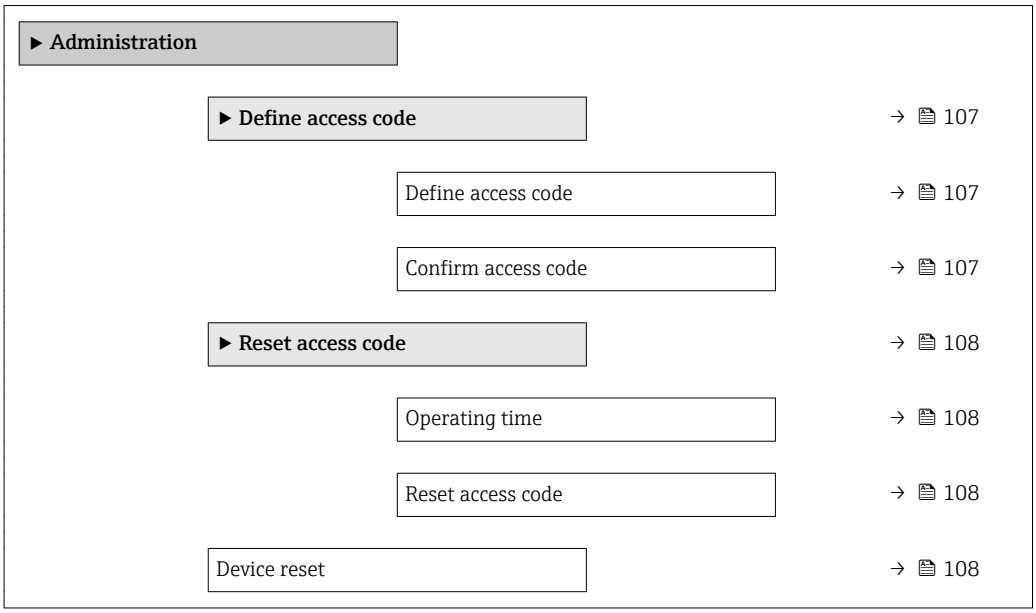

Using the parameter to define the access code

Navigation
"Setup" menu → Advanced setup → Administration → Define access code

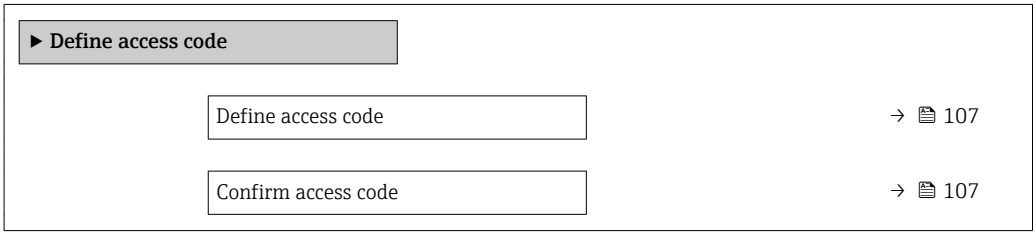

Parameter overview with brief description

Parameter	Description	User entry
Define access code	Restrict write-access to parameters to protect the configuration of the device against unintentional changes.	Max. 16-digit character string comprising numbers, letters and special characters
Confirm access code	Confirm the entered access code.	Max. 16-digit character string comprising numbers, letters and special characters

Using the parameter to reset the access code

Navigation
"Setup" menu → Advanced setup → Administration → Reset access code

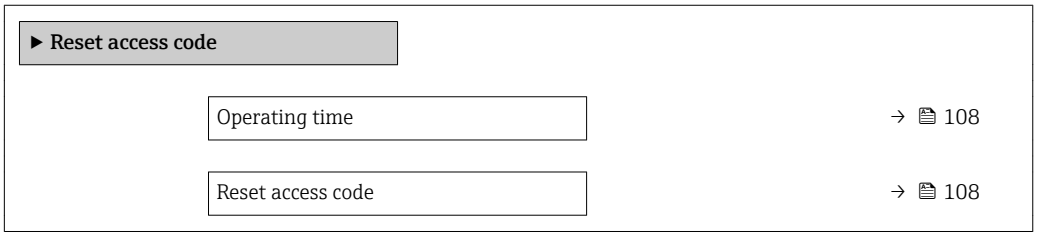

Parameter overview with brief description

Parameter	Description	User interface / User entry	Factory setting
Operating time	Indicates how long the device has been in operation.	Days (d), hours (h), minutes (m) and seconds (s)	–
Reset access code	Reset access code to factory settings. For a reset code, contact your Endress+Hauser service organization. The reset code can only be entered via: ▪ Web browser ▪ DeviceCare, FieldCare (via service interface CDI-RJ45) ▪ Fieldbus	Character string comprising numbers, letters and special characters	0x00

Using the parameter to reset the device

Navigation
"Setup" menu → Advanced setup → Administration

Parameter overview with brief description

Parameter	Description	Selection	Factory setting
Device reset	Reset the device configuration - either entirely or in part - to a defined state.	▪ Cancel ▪ To delivery settings ▪ Restart device ▪ Restore S-DAT backup	Cancel

10.6 Simulation

The **Simulation** submenu enables you to simulate, without a real flow situation, various process variables in the process and the device alarm mode and to verify downstream signal chains (switching valves or closed-control loops).

The parameters displayed depend on:
- The selected device order
- The set operating mode of the pulse/frequency/switch outputs

Navigation
"Diagnostics" menu → Simulation

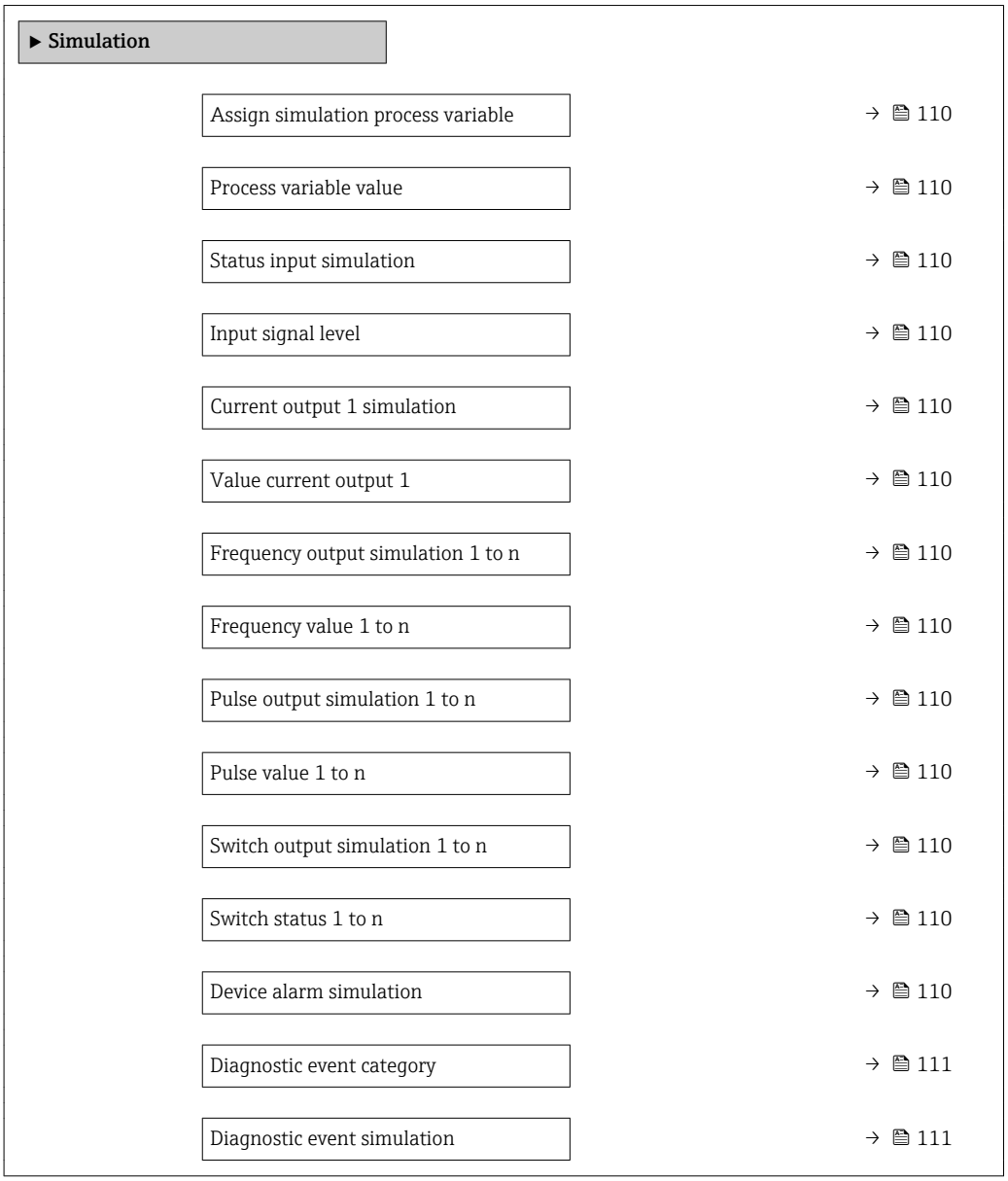

Parameter overview with brief description

Parameter	Prerequisite	Description	Selection / User entry	Factory setting
Assign simulation process variable	–	Select a process variable for the simulation process that is activated.	▪ Off ▪ Mass flow ▪ Volume flow ▪ Corrected volume flow ▪ Flow velocity ▪ Conductivity * ▪ Corrected conductivity * ▪ Temperature	Off
Process variable value	One of the following options is selected in the **Assign simulation process variable** parameter (→ 🖹 110): ▪ Volume flow ▪ Mass flow ▪ Corrected volume flow ▪ Flow velocity ▪ Conductivity * ▪ Corrected conductivity * ▪ Temperature	Enter the simulation value for the selected process variable.	Depends on the process variable selected	0
Status input simulation	For the following order code: "Output; input", option I "4-20mA HART, 2x pul./freq./ switch output; status input"	Switch simulation of the status input on and off.	▪ Off ▪ On	Off
Input signal level	In the **Status input simulation** parameter, the **On** option is selected.	Select the signal level for the simulation of the status input.	▪ High ▪ Low	High
Current output 1 simulation	–	Switch the simulation of the current output on and off.	▪ Off ▪ On	Off
Value current output 1	In the **Current output simulation** parameter, the **On** option is selected.	Enter the current value for simulation.	3.59 to 22.5 mA	3.59 mA
Frequency output simulation 1 to n	In the **Operating mode** parameter, the **Frequency** option is selected.	Switch the simulation of the frequency output on and off.	▪ Off ▪ On	Off
Frequency value 1 to n	In the **Frequency output simulation 1 to n** parameter, the **On** option is selected.	Enter the frequency value for the simulation.	0.0 to 12 500.0 Hz	0.0 Hz
Pulse output simulation 1 to n	In the **Operating mode** parameter, the **Pulse** option is selected.	Set and switch off the pulse output simulation. For **Fixed value** option: **Pulse width** parameter (→ 🖹 88) defines the pulse width of the pulses output.	▪ Off ▪ Fixed value ▪ Down-counting value	Off
Pulse value 1 to n	In the **Pulse output simulation 1 to n** parameter, the **Down-counting value** option is selected.	Enter the number of pulses for simulation.	0 to 65 535	0
Switch output simulation 1 to n	In the **Operating mode** parameter, the **Switch** option is selected.	Switch the simulation of the switch output on and off.	▪ Off ▪ On	Off
Switch status 1 to n	–	Select the status of the status output for the simulation.	▪ Open ▪ Closed	Open
Device alarm simulation	–	Switch the device alarm on and off.	▪ Off ▪ On	Off

Parameter	Prerequisite	Description	Selection / User entry	Factory setting
Diagnostic event category	–	Select a diagnostic event category.	▪ Sensor ▪ Electronics ▪ Configuration ▪ Process	Process
Diagnostic event simulation	–	Select a diagnostic event to simulate this event.	▪ Off ▪ Diagnostic event picklist (depends on the category selected)	Off

* Visibility depends on order options or device settings

10.7 Protecting settings from unauthorized access

The following options exist for protecting the configuration of the measuring device from unintentional modification after commissioning:
- Write protection via access code for the local display and Web browser
- Write protection via write protection switch
- Write protection via keypad lock

10.7.1 Write protection via access code

The effects of the user-specific access code are as follows:
- Via local operation, the parameters for the measuring device configuration are write-protected and their values can no longer be changed.
- Device access is protected via the Web browser, as are the parameters for the measuring device configuration.

Defining the access code via local display

1. Navigate to the **Define access code** parameter (→ 107).
2. Define a max. 16-digit character string comprising numbers, letters and special characters as the access code.
3. Enter the access code again in the to confirm the code.
   ↳ The -symbol appears in front of all write-protected parameters.

The device automatically locks the write-protected parameters again if a key is not pressed for 10 minutes in the navigation and editing view. The device locks the write-protected parameters automatically after 60 s if the user skips back to the operational display mode from the navigation and editing view.

- If parameter write protection is activated via an access code, it can also only be deactivated via this access code → 64.
- The user role with which the user is currently logged on via the local display is indicated by the → 64 **Access status display** parameter. Navigation path: Operation → Access status display

Parameters which can always be modified via the local display

Certain parameters that do not affect the measurement are excepted from parameter write protection via the local display. Despite the user-specific access code, they can always be modified, even if the other parameters are locked.

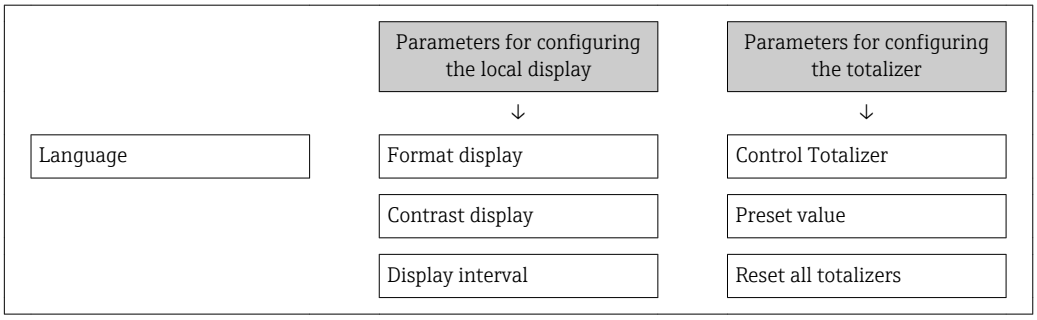

Defining the access code via the Web browser

1. Navigate to the **Define access code** parameter (→ 107).
2. Define a max. 16-digit numeric code as an access code.
3. Enter the access code again in the to confirm the code.
   ↳ The Web browser switches to the login page.

If no action is performed for 10 minutes, the Web browser automatically returns to the login page.

- If parameter write protection is activated via an access code, it can also only be deactivated via this access code → 64.
- The user role with which the user is currently logged on via Web browser is indicated by the **Access status tooling** parameter. Navigation path: Operation → Access status tooling

10.7.2 Write protection via write protection switch

Unlike parameter write protection via a user-specific access code, this allows write access to the entire operating menu - except for the **"Contrast display" parameter** - to be locked.

The parameter values are now read only and cannot be edited any more (exception **"Contrast display" parameter**):
- Via local display
- Via service interface (CDI-RJ45)
- Via HART protocol

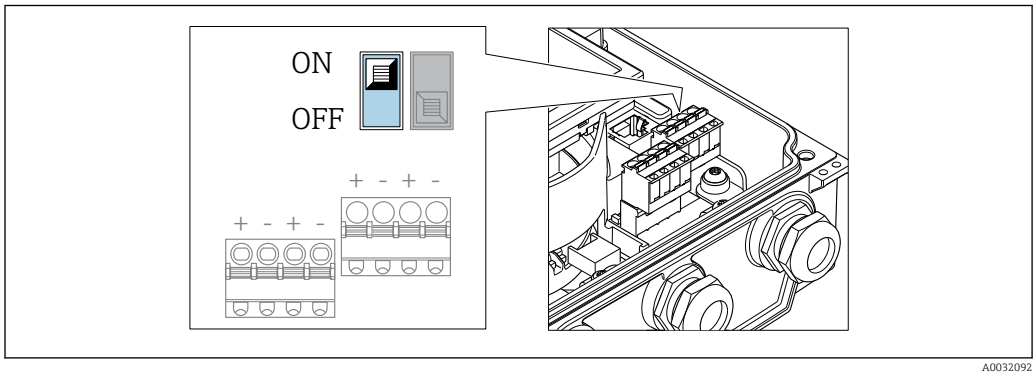

A0032092

1. Loosen the 4 fixing screws on the housing cover and open the housing cover.

2. Setting the write protection switch (WP) on the main electronics module to the **ON** position enables the hardware write protection. Setting the write protection switch (WP) on the main electronics module to the **OFF** position (factory setting) disables the hardware write protection.
   ↳ If the hardware write protection is enabled: The **Hardware locked** option is displayed in the **Locking status** parameter . In addition, on the local display the 🔒-symbol appears in front of the parameters in the header of the operational display and in the navigation view.

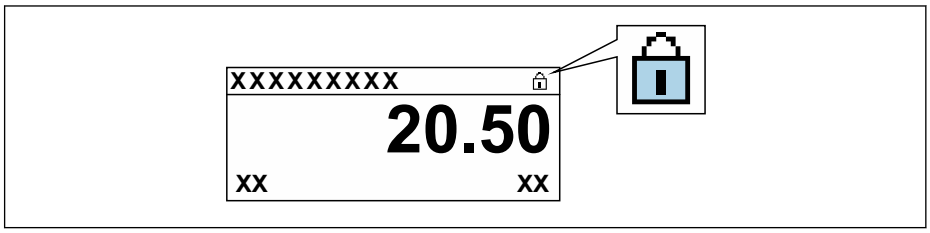

A0029425

   If the hardware write protection is disabled: No option is displayed in the **Locking status** parameter . On the local display, the 🔓-symbol disappears from in front of the parameters in the header of the operational display and in the navigation view.

3. **⚠ WARNING**

Excessive tightening torque applied to the fixing screws!
Risk of damaging the plastic transmitter.
▶ Tighten the fixing screws as per the tightening torque .

Reverse the removal procedure to reassemble the transmitter.

11 Operation

11.1 Reading the device locking status

Device active write protection: **Locking status** parameter

Operation → Locking status

Function scope of the "Locking status" parameter

Options	Description
None	The access status displayed in the **Access status display** parameter applies → 64. Only appears on local display.
Hardware locked	The DIP switch for hardware locking is activated on the main electronics module. This locks write access to the parameters (e.g. via local display or operating tool) .
Temporarily locked	Write access to the parameters is temporarily locked on account of internal processes running in the device (e.g. data upload/download, reset etc.). Once the internal processing has been completed, the parameters can be changed once again.

11.2 Adjusting the operating language

Detailed information:
- To configure the operating language → 81
- For information on the operating languages supported by the measuring device → 170

11.3 Configuring the display

Detailed information:
- On the basic settings for the local display → 93
- On the advanced settings for the local display → 102

11.4 Reading measured values

With the **Measured values** submenu, it is possible to read all the measured values.

Navigation
"Diagnostics" menu → Measured values → Output values

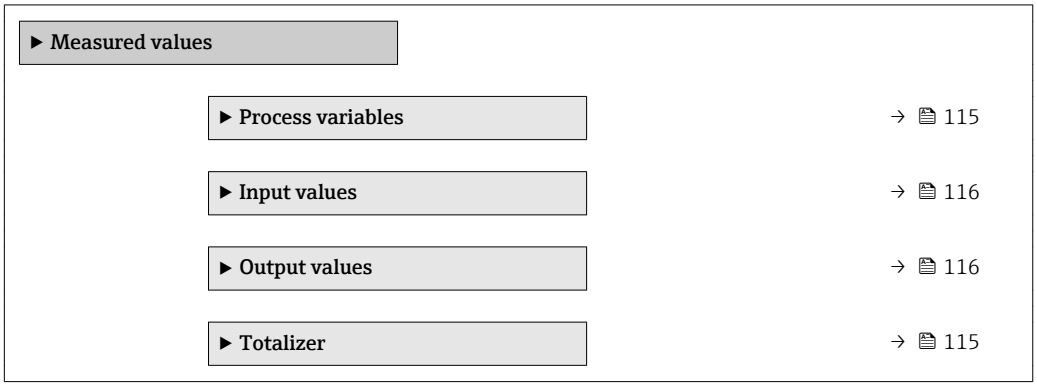

11.4.1 Process variables

The **Process variables** submenu contains all the parameters needed to display the current measured values for each process variable.

Navigation
"Diagnostics" menu → Measured values → Process variables

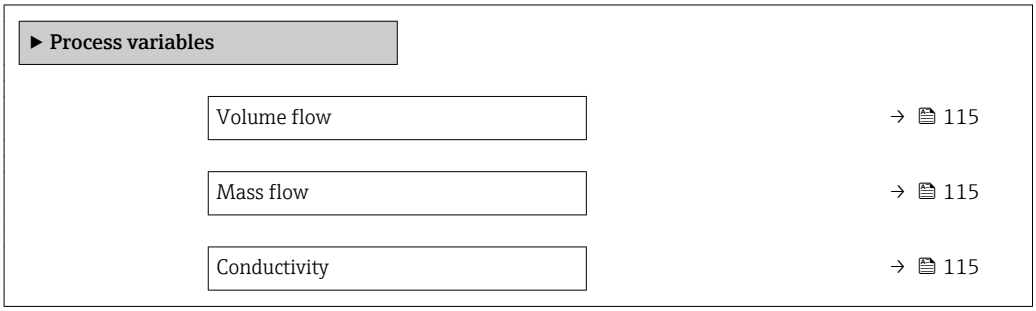

Parameter overview with brief description

Parameter	Prerequisite	Description	User interface
Volume flow	–	Displays the volume flow currently measured. *Dependency* The unit is taken from the **Volume flow unit** parameter (→ 84).	Signed floating-point number
Mass flow	–	Displays the mass flow currently calculated. *Dependency* The unit is taken from the **Mass flow unit** parameter (→ 84).	Signed floating-point number
Conductivity	The **On** option is selected in the **Conductivity measurement** parameter.	Displays the conductivity currently measured. *Dependency* The unit is taken from the **Conductivity unit** parameter (→ 84).	Signed floating-point number

11.4.2 "Totalizer" submenu

The **Totalizer** submenu contains all the parameters needed to display the current measured values for every totalizer.

Navigation
"Diagnostics" menu → Measured values → Totalizer

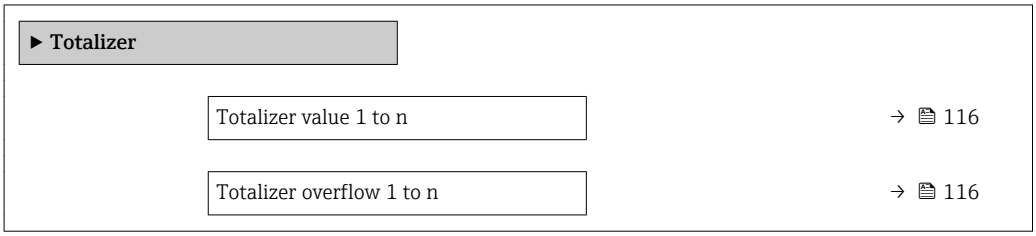

Parameter overview with brief description

Parameter	Prerequisite	Description	User interface
Totalizer value 1 to n	One of the following options is selected in the **Assign process variable** parameter (→ 101) of the **Totalizer 1 to n** submenu: ▪ Volume flow ▪ Mass flow	Displays the current totalizer counter value.	Signed floating-point number
Totalizer overflow 1 to n	One of the following options is selected in the **Assign process variable** parameter (→ 101) of the **Totalizer 1 to n** submenu: ▪ Volume flow ▪ Mass flow	Displays the current totalizer overflow.	Integer with sign

11.4.3 Input values

The **Input values** submenu guides you systematically to the individual input values.

The submenu appears only if the device was ordered with a status input → 40.

Navigation

"Diagnostics" menu → Measured values → Input values

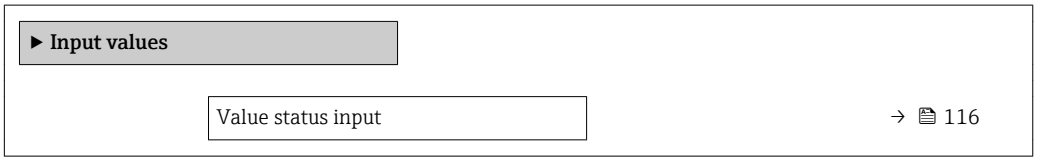

Parameter overview with brief description

Parameter	Prerequisite	Description	User interface
Value status input	For the following order code: ▪ "Output; input", option **I** "4-20mA HART, 2x pul./freq./switch output; status input" ▪ "Output; input", option **J** "4-20mA HART, certified pulse output, switch output; status input"	Shows the current input signal level.	▪ High ▪ Low

11.4.4 Output values

The **Output values** submenu contains all the parameters needed to display the current measured values for every output.

The parameters displayed depend on:
- The selected device order
- The set operating mode of the pulse/frequency/switch outputs

Navigation

"Diagnostics" menu → Measured values → Output values

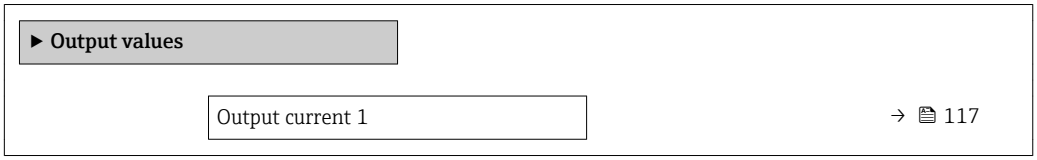

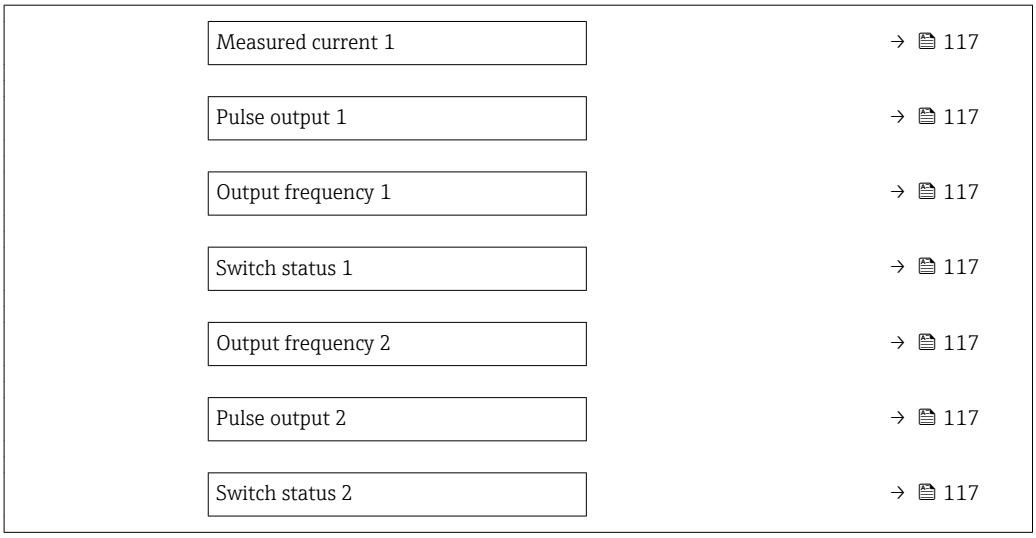

Parameter overview with brief description

Parameter	Prerequisite	Description	User interface
Output current 1	–	Displays the current value currently calculated for the current output.	3.59 to 22.5 mA
Measured current 1	–	Displays the current value currently measured for the current output.	0 to 30 mA
Pulse output 1 to n	In the **Operating mode** parameter, the **Pulse** option is selected.	Displays the pulse frequency currently output.	Positive floating-point number
Output frequency 1 to n	In the **Operating mode** parameter, the **Frequency** option is selected.	Displays the value currently measured for the frequency output.	0.0 to 12 500.0 Hz
Switch status 1 to n	In the **Operating mode** parameter, the **Switch** option is selected.	Displays the current switch output status.	▪ Open ▪ Closed

11.5 Adapting the measuring device to the process conditions

The following are available for this purpose:
- Basic settings using the**Setup** menu (→ 81)
- Advanced settings using the**Advanced setup** submenu (→ 99)

11.6 Performing a totalizer reset

The totalizers are reset in the **Operation** submenu:
- Control Totalizer
- Reset all totalizers

Navigation
"Operation" menu → Totalizer handling

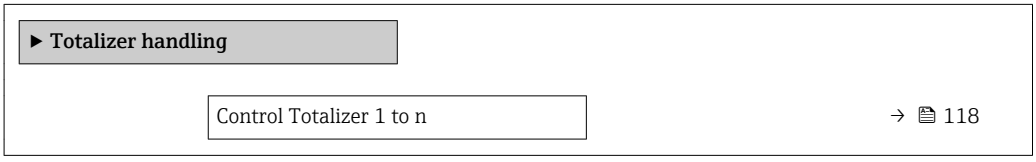

Preset value 1 to n	→ 118
Reset all totalizers	→ 118

Parameter overview with brief description

Parameter	Prerequisite	Description	Selection / User entry	Factory setting
Control Totalizer 1 to n	One of the following options is selected in the **Assign process variable** parameter (→ 101) of the **Totalizer 1 to n** submenu: ▪ Volume flow ▪ Mass flow	Control totalizer value.	▪ Totalize ▪ Reset + hold ▪ Preset + hold ▪ Reset + totalize ▪ Preset + totalize ▪ Hold	Totalize
Preset value 1 to n	One of the following options is selected in the **Assign process variable** parameter (→ 101) of the **Totalizer 1 to n** submenu: ▪ Volume flow ▪ Mass flow	Specify start value for totalizer. *Dependency* The unit of the selected process variable is specified for the totalizer in the **Unit totalizer** parameter (→ 101).	Signed floating-point number	0 l
Reset all totalizers	–	Reset all totalizers to 0 and start.	▪ Cancel ▪ Reset + totalize	Cancel

11.6.1 Function scope of the "Control Totalizer" parameter

Options	Description
Totalize	The totalizer is started or continues running.
Reset + hold	The totaling process is stopped and the totalizer is reset to 0.
Preset + hold	The totaling process is stopped and the totalizer is set to its defined start value from the **Preset value** parameter.
Reset + totalize	The totalizer is reset to 0 and the totaling process is restarted.
Preset + totalize	The totalizer is set to the defined start value from the **Preset value** parameter and the totaling process is restarted.

11.6.2 Function scope of the "Reset all totalizers" parameter

Options	Description
Cancel	No action is executed and the user exits the parameter.
Reset + totalize	Resets all totalizers to 0 and restarts the totaling process. This deletes all the flow values previously totalized.

11.7 Showing data logging

The **Extended HistoROM** application package must be enabled in the device (order option) for the **Data logging** submenu to appear. This contains all the parameters for the measured value history.

Data logging is also available via:
- Plant Asset Management Tool FieldCare → 74.
- Web browser

Function range

- A total of 1000 measured values can be stored
- 4 logging channels
- Adjustable logging interval for data logging
- Display of the measured value trend for each logging channel in the form of a chart

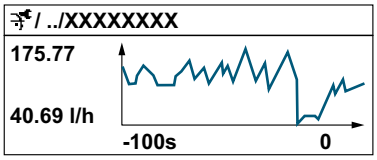

A0034352

- x-axis: depending on the number of channels selected displays 250 to 1000 measured values of a process variable.
- y-axis: displays the approximate measured value span and constantly adapts this to the ongoing measurement.

If the length of the logging interval or the assignment of the process variables to the channels is changed, the content of the data logging is deleted.

Navigation

"Diagnostics" menu → Data logging

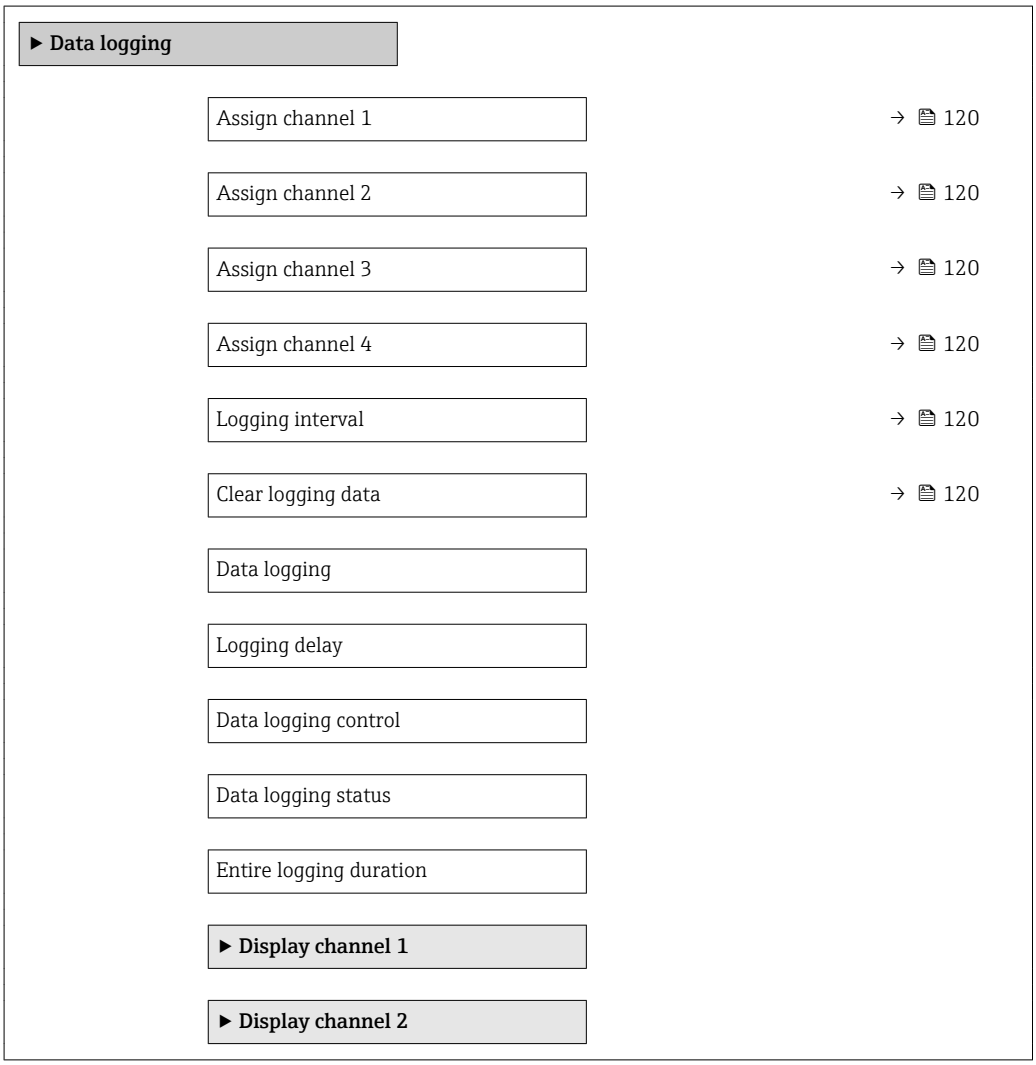

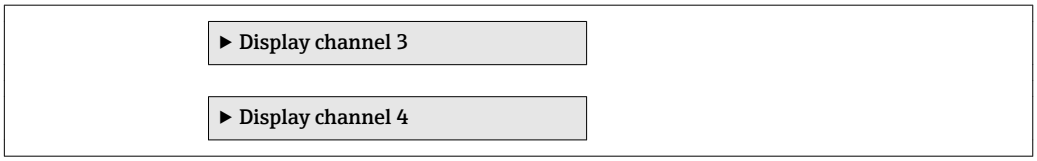

Parameter overview with brief description

Parameter	Prerequisite	Description	Selection / User entry	Factory setting
Assign channel 1	The **Extended HistoROM** application package is available. The software options currently enabled are displayed in the **Software option overview** parameter.	Assign a process variable to logging channel.	▪ Off ▪ Volume flow ▪ Mass flow ▪ Corrected volume flow ▪ Flow velocity ▪ Conductivity * ▪ Corrected conductivity * ▪ Temperature ▪ Electronic temperature ▪ Current output 1 *	Off
Assign channel 2	The **Extended HistoROM** application package is available. The software options currently enabled are displayed in the **Software option overview** parameter.	Assign process variable to logging channel.	Picklist, see **Assign channel 1** parameter (→ 120)	Off
Assign channel 3	The **Extended HistoROM** application package is available. The software options currently enabled are displayed in the **Software option overview** parameter.	Assign process variable to logging channel.	Picklist, see **Assign channel 1** parameter (→ 120)	Off
Assign channel 4	The **Extended HistoROM** application package is available. The software options currently enabled are displayed in the **Software option overview** parameter.	Assign process variable to logging channel.	Picklist, see **Assign channel 1** parameter (→ 120)	Off
Logging interval	The **Extended HistoROM** application package is available.	Define the logging interval for data logging. This value defines the time interval between the individual data points in the memory.	0.1 to 999.0 s	1.0 s
Clear logging data	The **Extended HistoROM** application package is available.	Clear the entire logging data.	▪ Cancel ▪ Clear data	Cancel

* Visibility depends on order options or device settings

12 Diagnostics and troubleshooting

12.1 General troubleshooting

For local display

Error	Possible causes	Solution
Local display dark and no output signals	Supply voltage does not match the value indicated on the nameplate.	Apply the correct supply voltage → 📄 45→ 📄 45.
Local display dark and no output signals	No contact between connecting cables and terminals.	Check the connection of the cables and correct if necessary.
Local display dark and no output signals	Terminals are not plugged into the main electronics module correctly.	Check terminals.
Local display dark and no output signals	Main electronics module is defective.	Order spare part → 📄 141.
Local display dark and no output signals	The connector between the main electronics module and display module is not plugged in correctly.	Check the connection and correct if necessary.
Local display dark and no output signals	The connecting cable is not plugged in correctly.	1. Check the connection of the electrode cable and correct if necessary. 2. Check the connection of the coil current cable and correct if necessary.
Local display is dark, but signal output is within the valid range	Display is set too bright or too dark.	▪ Set the display brighter by simultaneously pressing ⊞ + Ⓔ. ▪ Set the display darker by simultaneously pressing ⊟ + Ⓔ.
Local display is dark, but signal output is within the valid range	Display module is defective.	Order spare part → 📄 141.
Backlighting of local display is red	Diagnostic event with "Alarm" diagnostic behavior has occurred.	Take remedial measures
Text on local display appears in a foreign language and cannot be understood.	Incorrect operating language is configured.	1. Press ⊟ + ⊞ for 2 s ("home position"). 2. Press Ⓔ. 3. Set the desired language in the **Display language** parameter (→ 📄 104).
Message on local display: "Communication Error" "Check Electronics"	Communication between the display module and the electronics is interrupted.	▪ Check the cable and the connector between the main electronics module and display module. ▪ Order spare part → 📄 141.

For output signals

Error	Possible causes	Solution
Signal output outside the valid range	Main electronics module is defective.	Order spare part → 📄 141.
Device shows correct value on local display, but signal output is incorrect, though in the valid range.	Configuration error	Check and correct the parameter configuration.
Device measures incorrectly.	Configuration error or device is operated outside the application.	1. Check and correct parameter configuration. 2. Observe limit values specified in the "Technical Data".

For access

Error	Possible causes	Solution
No write access to parameters	Hardware write protection enabled	Set the write protection switch on main electronics module to the **OFF** position → 🖹 112.
No write access to parameters	Current user role has limited access authorization	1. Check user role → 🖹 64. 2. Enter correct customer-specific access code → 🖹 64.
No connection via HART protocol	Communication resistor missing or incorrectly installed.	Install the communication resistor (250 Ω) correctly. Observe the maximum load → 🖹 149.
No connection via HART protocol	Commubox ▪ Connected incorrectly ▪ Configured incorrectly ▪ Drivers not installed correctly ▪ USB interface on computer configured incorrectly	Observe the documentation for the Commubox. FXA195 HART: Document "Technical Information" TI00404F
Not connecting to Web server	Web server disabled	Using the "FieldCare" or "DeviceCare" operating tool, check whether the Web server of the measuring device is enabled, and enable it if necessary → 🖹 71.
	Incorrect setting for the Ethernet interface of the computer	1. Check the properties of the Internet protocol (TCP/IP) → 🖹 67. 2. Check the network settings with the IT manager.
Not connecting to Web server	Incorrect IP address	Check the IP address: 192.168.1.212 → 🖹 67
Not connecting to Web server	Incorrect WLAN access data	▪ Check WLAN network status. ▪ Log on to the device again using WLAN access data. ▪ Verify that WLAN is enabled on the measuring device and operating device .
	WLAN communication disabled	–
Not connecting to Web server, FieldCare or DeviceCare	No WLAN network available	▪ Check if WLAN reception is present: LED on display module is lit blue ▪ Check if WLAN connection is enabled: LED on display module flashes blue ▪ Switch on instrument function.
Network connection not present or unstable	WLAN network is weak.	Operating device is outside of reception range: Check network status on operating device.
	Parallel WLAN and Ethernet communication	▪ Check network settings. ▪ Temporarily enable only the WLAN as an interface.
Web browser frozen and operation no longer possible	Data transfer active	Wait until data transfer or current action is finished.
	Connection lost	1. Check cable connection and power supply. 2. Refresh the Web browser and restart if necessary.
Content of Web browser incomplete or difficult to read	Not using optimum version of Web server.	1. Use the correct Web browser version . 2. Clear the Web browser cache and restart the Web browser.
	Unsuitable view settings.	Change the font size/display ratio of the Web browser.

Error	Possible causes	Solution
No or incomplete display of contents in the Web browser	▪ JavaScript not enabled ▪ JavaScript cannot be enabled	1. Enable JavaScript. 2. Enter http://192.168.1.212/basic.html as the IP address.
Operation with FieldCare or DeviceCare via CDI-RJ45 service interface (port 8000)	Firewall of computer or network is preventing communication	Depending on the settings of the firewall used on the computer or in the network, the firewall must be adapted or disabled to allow FieldCare/DeviceCare access.
Flashing of firmware with FieldCare or DeviceCare via CDI-RJ45 service interface (via port 8000 or TFTP ports)	Firewall of computer or network is preventing communication	Depending on the settings of the firewall used on the computer or in the network, the firewall must be adapted or disabled to allow FieldCare/DeviceCare access.

12.2 Diagnostic information via light emitting diodes

12.2.1 Transmitter

Different LEDs in the transmitter provide information on the device status.

LED	Color	Meaning
Supply voltage	Off	Supply voltage is off or too low
	Green	Supply voltage is ok
Link/Activity	Orange	Link available but no activity
	Flashing orange	Activity present
Communication	Flashing white	HART communication is active.
Alarm	Green	Measuring device is ok
	Flashing green	Measuring device not configured
	Off	Firmware error
	Red	Main error
	Flashing red	Error
	Flashing red/green	Start measuring device

12.3 Diagnostic information on local display

12.3.1 Diagnostic message

Faults detected by the self-monitoring system of the measuring device are displayed as a diagnostic message in alternation with the operational display.

Operational display in alarm condition	Diagnostic message

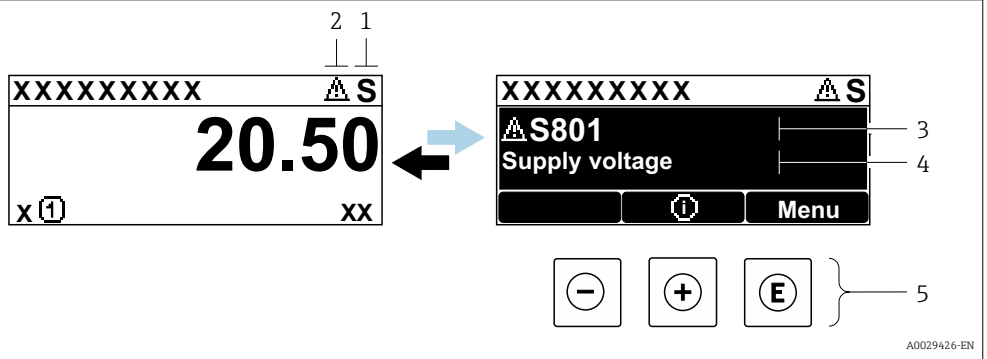

1 *Status signal*
2 *Diagnostic behavior*
3 *Diagnostic behavior with diagnostic code*
4 *Short text*
5 *Operating elements*

If two or more diagnostic events are pending simultaneously, only the message of the diagnostic event with the highest priority is shown.

Other diagnostic events that have occurred can be displayed in the **Diagnostics** menu:
- Via parameter
- Via submenus → 134

Status signals

The status signals provide information on the state and reliability of the device by categorizing the cause of the diagnostic information (diagnostic event).

The status signals are categorized according to VDI/VDE 2650 and NAMUR Recommendation NE 107: F = Failure, C = Function Check, S = Out of Specification, M = Maintenance Required

Symbol	Meaning
F	**Failure** A device error has occurred. The measured value is no longer valid.
C	**Function check** The device is in service mode (e.g. during a simulation).
S	**Out of specification** The device is operated: ▪ Outside its technical specification limits (e.g. outside the process temperature range) ▪ Outside of the configuration carried out by the user (e.g. maximum flow in parameter **20 mA value**)
M	**Maintenance required** Maintenance is required. The measured value remains valid.

Diagnostic behavior

Symbol	Meaning
	**Alarm** ▪ Measurement is interrupted. ▪ Signal outputs and totalizers assume the defined alarm condition. ▪ A diagnostic message is generated. ▪ The background lighting changes to red.
	**Warning** Measurement is resumed. The signal outputs and totalizers are not affected. A diagnostic message is generated.

Diagnostic information

The fault can be identified using the diagnostic information. The short text helps you by providing information about the fault. In addition, the corresponding symbol for the diagnostic behavior is displayed in front of the diagnostic information on the local display.

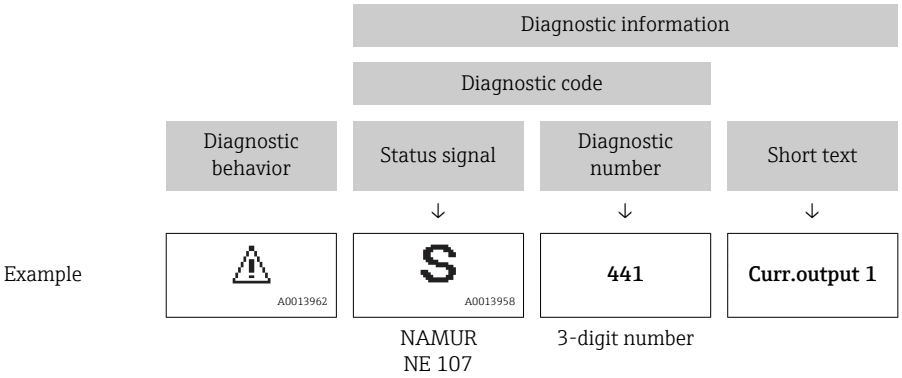

Operating elements

Key	Meaning
	**Plus key** *In a menu, submenu* Opens the message about remedy information.
	**Enter key** *In a menu, submenu* Opens the operating menu.

12.3.2 Calling up remedial measures

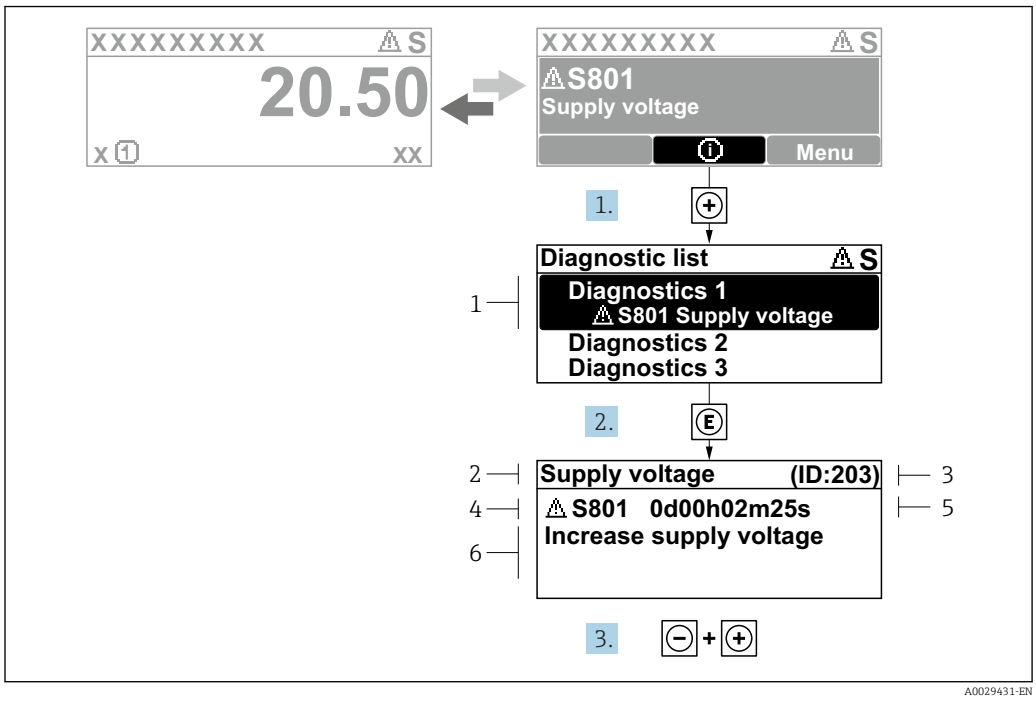

33 *Message about remedial measures*

1 *Diagnostic information*
2 *Short text*
3 *Service ID*
4 *Diagnostic behavior with diagnostic code*
5 *Operation time of occurrence*
6 *Remedial measures*

1. The user is in the diagnostic message.
   Press ⊞ (ⓘ symbol).
   ↳ The **Diagnostic list** submenu opens.
2. Select the desired diagnostic event with ⊞ or ⊟ and press Ⓔ .
   ↳ The message about the remedial measures opens.
3. Press ⊟ + ⊞ simultaneously.
   ↳ The message about the remedial measures closes.

The user is in the **Diagnostics** menu at an entry for a diagnostics event, e.g. in the **Diagnostic list** submenu or **Previous diagnostics** parameter.

1. Press Ⓔ.
   ↳ The message for the remedial measures for the selected diagnostic event opens.
2. Press ⊟ + ⊞ simultaneously.
   ↳ The message for the remedial measures closes.

12.4 Diagnostic information in the Web browser

12.4.1 Diagnostic options

Any faults detected by the measuring device are displayed in the Web browser on the home page once the user has logged on.

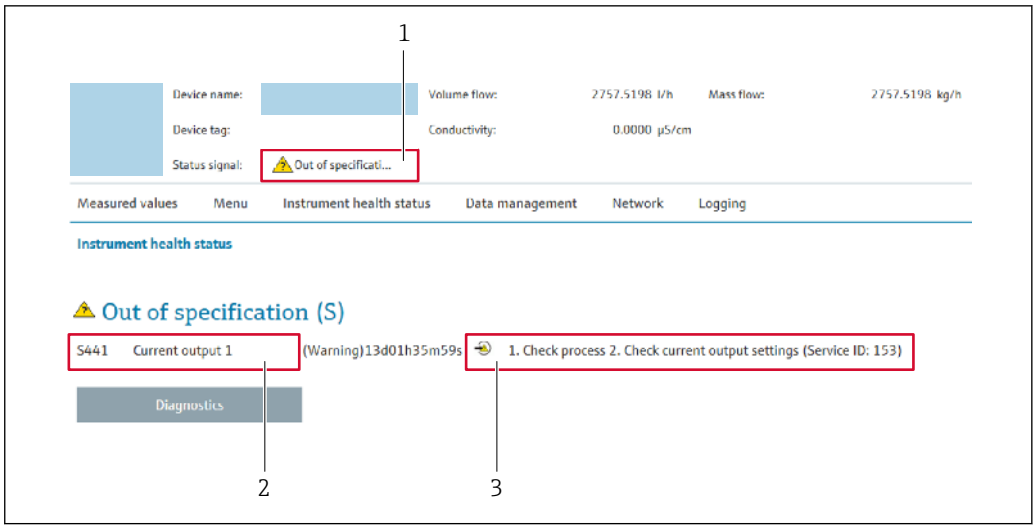

1 *Status area with status signal*
2 *Diagnostic information → 125*
3 *Remedy information with Service ID*

In addition, diagnostic events which have occurred can be shown in the **Diagnostics** menu:
- Via parameter
- Via submenu → 134

Status signals

The status signals provide information on the state and reliability of the device by categorizing the cause of the diagnostic information (diagnostic event).

Symbol	Meaning
	Failure A device error has occurred. The measured value is no longer valid.
	Function check The device is in service mode (e.g. during a simulation).
	Out of specification The device is operated: ▪ Outside its technical specification limits (e.g. outside the process temperature range) ▪ Outside of the configuration carried out by the user (e.g. maximum flow in parameter **20 mA value**)
	Maintenance required Maintenance is required. The measured value is still valid.

The status signals are categorized in accordance with VDI/VDE 2650 and NAMUR Recommendation NE 107.

12.4.2 Calling up remedy information

Remedy information is provided for every diagnostic event to ensure that problems can be rectified quickly. These measures are displayed in red along with the diagnostic event and the related diagnostic information.

12.5 Diagnostic information in DeviceCare or FieldCare

12.5.1 Diagnostic options

Any faults detected by the measuring device are displayed on the home page of the operating tool once the connection has been established.

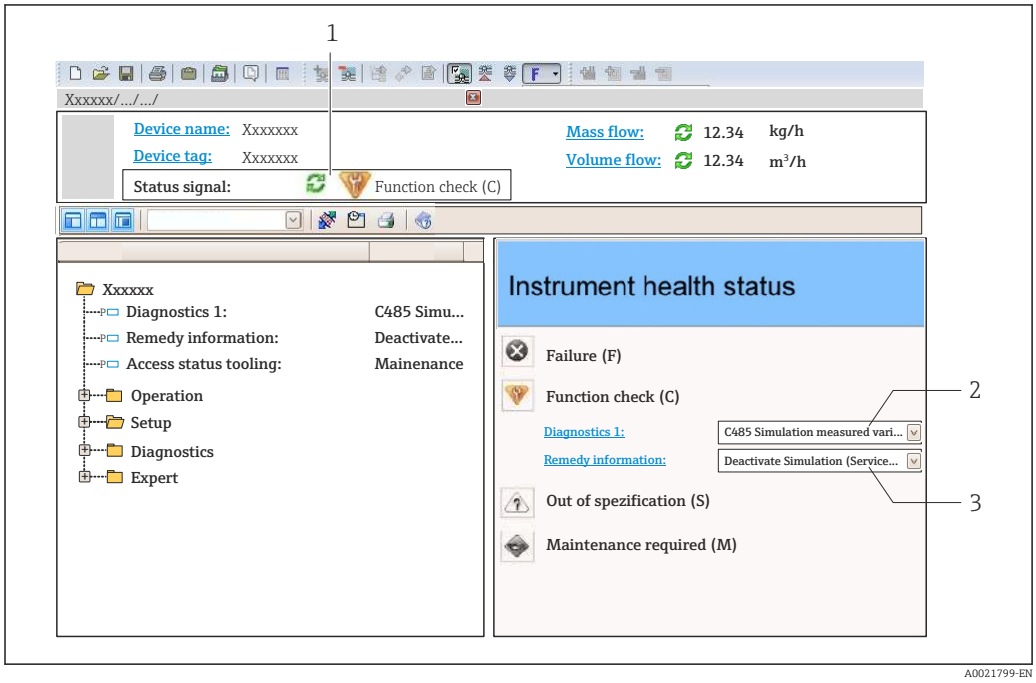

1 *Status area with status signal→ 124*
2 *Diagnostic information→ 125*
3 *Remedy information with Service ID*

In addition, diagnostic events which have occurred can be shown in the **Diagnostics** menu:
- Via parameter
- Via submenu → 134

Diagnostic information

The fault can be identified using the diagnostic information. The short text helps you by providing information about the fault. In addition, the corresponding symbol for the diagnostic behavior is displayed in front of the diagnostic information on the local display.

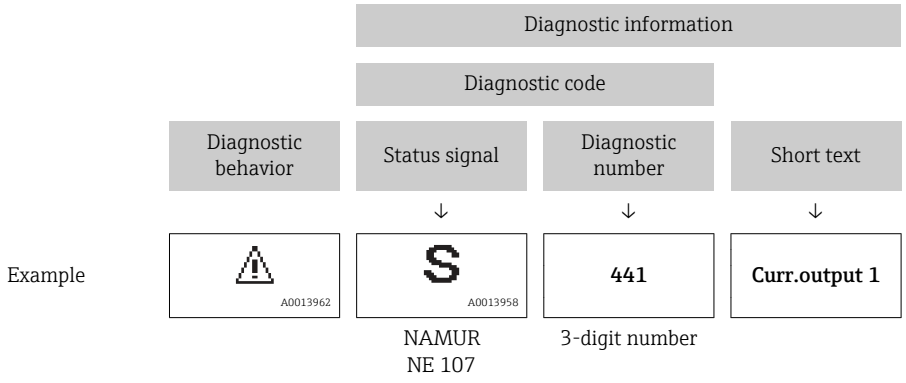

12.5.2 Calling up remedy information

Remedy information is provided for every diagnostic event to ensure that problems can be rectified quickly:
- On the home page
  Remedy information is displayed in a separate field below the diagnostics information.
- In the **Diagnostics** menu
  Remedy information can be called up in the working area of the user interface.

The user is in the **Diagnostics** menu.

1. Call up the desired parameter.
2. On the right in the working area, mouse over the parameter.
   ↳ A tool tip with remedy information for the diagnostic event appears.

12.6 Adapting the diagnostic information

12.6.1 Adapting the diagnostic behavior

Each item of diagnostic information is assigned a specific diagnostic behavior at the factory. The user can change this assignment for specific diagnostic information in the **Diagnostic behavior** submenu.

Expert → System → Diagnostic handling → Diagnostic behavior

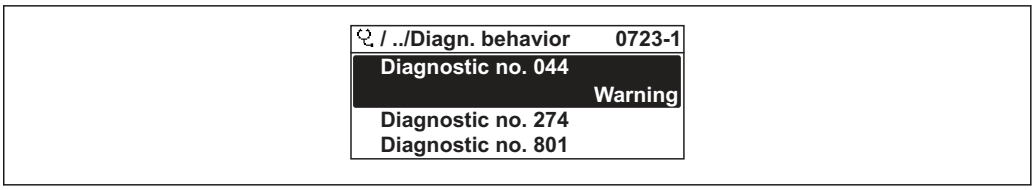

34 *Taking the example of the local display*

You can assign the following options to the diagnostic number as the diagnostic behavior:

Options	Description
Alarm	The device stops measurement. The signal outputs and totalizers assume the defined alarm condition. A diagnostic message is generated. The background lighting changes to red.
Warning	The device continues to measure. The signal outputs and totalizers are not affected. A diagnostic message is generated.
Logbook entry only	The device continues to measure. The diagnostic message is displayed only in the **Event logbook** submenu (**Event list** submenu) and is not displayed in alternation with the operational display.
Off	The diagnostic event is ignored, and no diagnostic message is generated or entered.

12.6.2 Adapting the status signal

Each item of diagnostic information is assigned a specific status signal at the factory. The user can change this assignment for specific diagnostic information in the **Diagnostic event category** submenu.

Expert → Communication → Diagnostic event category

Available status signals

Configuration as per HART 7 Specification (Condensed Status), in accordance with NAMUR NE107.

Symbol	Meaning
 A0013956	**Failure** A device error is present. The measured value is no longer valid.
 A0013959	**Function check** The device is in service mode (e.g. during a simulation).
 A0013958	**Out of specification** The device is being operated: ▪ Outside its technical specification limits (e.g. outside the process temperature range) ▪ Outside of the configuration carried out by the user (e.g. maximum flow in parameter **20 mA value**)
 A0013957	**Maintenance required** Maintenance is required. The measured value is still valid.
 A0023076	Has no effect on the condensed status.

12.7 Overview of diagnostic information

The amount of diagnostic information and the number of measured variables affected increase if the measuring device has one or more application packages.

In the case of some items of diagnostic information, the status signal and the diagnostic behavior can be changed. Change the diagnostic information → 129

Diagnostic number	Short text	Remedy instructions	Status signal [from the factory]	Diagnostic behavior [from the factory]
Diagnostic of sensor				
043	Sensor short circuit	1. Check sensor cable and sensor 2. Execute Heartbeat Verification 3. Replace sensor cable or sensor	S	Warning [1]
082	Data storage	1. Check module connections 2. Contact service	F	Alarm
083	Memory content	1. Restart device 2. Restore HistoROM S-DAT backup ('Device reset' parameter) 3. Replace HistoROM S-DAT	F	Alarm
170	Coil resistance	Check ambient and process temperature	F	Alarm
180	Temperature sensor defective	1. Check sensor connections 2. Replace sensor cable or sensor 3. Turn off temperature measurement	F	Warning
181	Sensor connection	1. Check sensor cable and sensor 2. Execute Heartbeat Verification 3. Replace sensor cable or sensor	F	Alarm
Diagnostic of electronic				
201	Device failure	1. Restart device 2. Contact service	F	Alarm

Diagnostic number	Short text	Remedy instructions	Status signal [from the factory]	Diagnostic behavior [from the factory]
242	Software incompatible	1. Check software 2. Flash or change main electronics module	F	Alarm
252	Modules incompatible	1. Check electronic modules 2. Change electronic modules	F	Alarm
261	Electronic modules	1. Restart device 2. Check electronic modules 3. Change I/O Modul or main electronics	F	Alarm
262	Sensor electronic connection faulty	1. Check or replace connection cable between sensor electronic module (ISEM) and main electronics 2. Check or replace ISEM or main electronics	F	Alarm
270	Main electronic failure	Change main electronic module	F	Alarm
271	Main electronic failure	1. Restart device 2. Change main electronic module	F	Alarm
272	Main electronic failure	1. Restart device 2. Contact service	F	Alarm
273	Main electronic failure	Change electronic	F	Alarm
275	I/O module defective	Change I/O module	F	Alarm
276	I/O module faulty	1. Restart device 2. Change I/O module	F	Alarm
283	Memory content	1. Reset device 2. Contact service	F	Alarm
302	Device verification active	Device verification active, please wait.	C	Warning
311	Electronic failure	1. Do not reset device 2. Contact service	M	Warning
372	Sensor electronic (ISEM) faulty	1. Restart device 2. Check if failure recurs 3. Replace sensor electronic module (ISEM)	F	Alarm
373	Sensor electronic (ISEM) faulty	1. Transfer data or reset device 2. Contact service	F	Alarm
375	I/O- communication failed	1. Restart device 2. Check if failure recurs 3. Replace module rack inclusive electronic modules	F	Alarm
376	Sensor electronic (ISEM) faulty	1. Replace sensor electronic module (ISEM) 2. Turn off diagnostic message	F	Warning [1)]
377	Sensor electronic (ISEM) faulty	1. Check sensor cable and sensor 2. Perform Heartbeat Verification 3. Replace sensor cable or sensor	F	Warning [1)]
382	Data storage	1. Insert T-DAT 2. Replace T-DAT	F	Alarm
383	Memory content	1. Restart device 2. Delete T-DAT via 'Reset device' parameter 3. Replace T-DAT	F	Alarm
512	Sensor electronic (ISEM) faulty	1. Check ECC recovery time 2. Turn off ECC	F	Alarm

Diagnostic number	Short text	Remedy instructions	Status signal [from the factory]	Diagnostic behavior [from the factory]
Diagnostic of configuration				
410	Data transfer	1. Check connection 2. Retry data transfer	F	Alarm
412	Processing download	Download active, please wait	C	Warning
431	Trim 1	Carry out trim	C	Warning
437	Configuration incompatible	1. Restart device 2. Contact service	F	Alarm
438	Dataset	1. Check data set file 2. Check device configuration 3. Up- and download new configuration	M	Warning
441	Current output	1. Check process 2. Check current output settings	S	Warning [1)]
442	Frequency output 1 to n	1. Check process 2. Check frequency output settings	S	Warning [1)]
443	Pulse output 1 to n	1. Check process 2. Check pulse output settings	S	Warning [1)]
453	Flow override	Deactivate flow override	C	Warning
484	Failure mode simulation	Deactivate simulation	C	Alarm
485	Measured variable simulation	Deactivate simulation	C	Warning
491	Current output 1 simulation	Deactivate simulation	C	Warning
492	Simulation frequency output 1 to n	Deactivate simulation frequency output	C	Warning
493	Simulation pulse output 1 to n	Deactivate simulation pulse output	C	Warning
494	Switch output simulation 1 to n	Deactivate simulation switch output	C	Warning
495	Diagnostic event simulation	Deactivate simulation	C	Warning
496	Status input simulation	Deactivate simulation status input	C	Warning
502	CT activation/ deactivation failed	Follow the sequence of the custody transfer activation/deactivation: First authorized user login, then set the DIP switch on the main electonic module	C	Warning
511	Sensor electronic (ISEM) faulty	1. Check measuring period and integration time 2. Check sensor properties	C	Alarm
530	Electrode cleaning is running	Turn off ECC	C	Warning
531	Empty pipe detection	Execute EPD adjustment	S	Warning [1)]
537	Configuration	1. Check IP addresses in network 2. Change IP address	F	Warning
540	Custody transfer mode failed	1. Deactivate custody transfer mode 2. Reactivate custody transfer mode	F	Alarm
599	Custody transfer logbook full	1. Deactivate custody transfer mode 2. Clear custody transfer logbook (all 30 entries) 3. Activate custody transfer mode	F	Warning

Diagnostic number	Short text	Remedy instructions	Status signal [from the factory]	Diagnostic behavior [from the factory]
Diagnostic of process				
803	Current loop	1. Check wiring 2. Change I/O module	F	Alarm
832	Electronic temperature too high	Reduce ambient temperature	S	Warning [1]
833	Electronic temperature too low	Increase ambient temperature	S	Warning [1]
834	Process temperature too high	Reduce process temperature	S	Warning [1]
835	Process temperature too low	Increase process temperature	S	Warning [1]
842	Process limit	Low flow cut off active! 1. Check low flow cut off configuration	S	Warning
882	Input signal	1. Check input configuration 2. Check external device or process conditions	F	Alarm
937	EMC interference	1. Eliminate external magnetic field near sensor 2. Turn off diagnostic message	S	Warning [1]
938	EMC interference	1. Check ambient conditions regarding EMC influence 2. Turn off diagnostic message	F	Alarm [1]
962	Empty pipe	1. Perform full pipe adjustment 2. Perform empty pipe adjustment 3. Turn off empty pipe detection	S	Warning [1]

1) Diagnostic behavior can be changed.

12.8 Pending diagnostic events

The **Diagnostics** menu allows the user to view the current diagnostic event and the previous diagnostic event separately.

To call up the measures to rectify a diagnostic event:
- Via local display → 126
- Via Web browser → 127
- Via "FieldCare" operating tool → 129
- Via "DeviceCare" operating tool → 129

Other pending diagnostic events can be displayed in the **Diagnostic list** submenu → 134

Navigation

"Diagnostics" menu

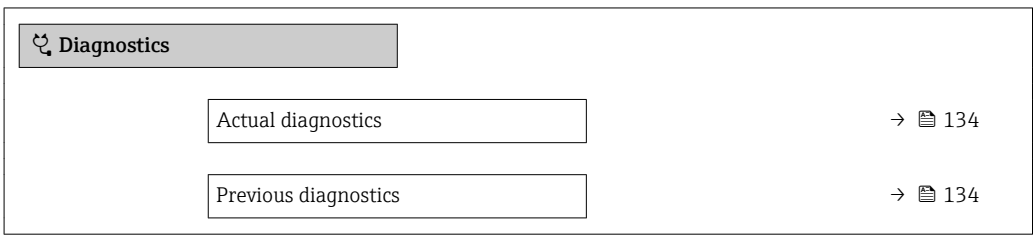

Operating time from restart	→ 134
Operating time	→ 134

Parameter overview with brief description

Parameter	Prerequisite	Description	User interface
Actual diagnostics	A diagnostic event has occurred.	Shows the current occured diagnostic event along with its diagnostic information. If two or more messages occur simultaneously, the message with the highest priority is shown on the display.	Symbol for diagnostic behavior, diagnostic code and short message.
Previous diagnostics	Two diagnostic events have already occurred.	Shows the diagnostic event that occurred prior to the current diagnostic event along with its diagnostic information.	Symbol for diagnostic behavior, diagnostic code and short message.
Operating time from restart	–	Shows the time the device has been in operation since the last device restart.	Days (d), hours (h), minutes (m) and seconds (s)
Operating time	–	Indicates how long the device has been in operation.	Days (d), hours (h), minutes (m) and seconds (s)

12.9 Diagnostic list

Up to 5 currently pending diagnostic events can be displayed in the **Diagnostic list** submenu along with the associated diagnostic information. If more than 5 diagnostic events are pending, the events with the highest priority are shown on the display.

Navigation path
Diagnostics → Diagnostic list

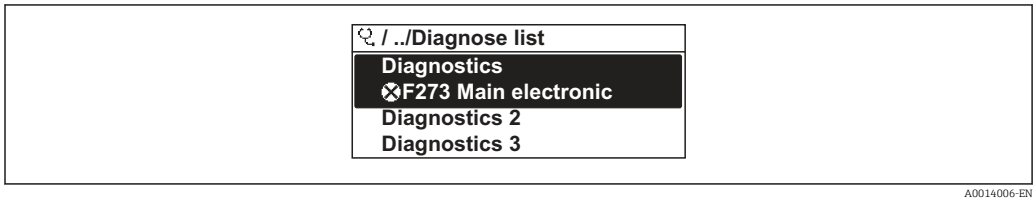

35 *Taking the example of the local display*

To call up the measures to rectify a diagnostic event:
- Via local display → 126
- Via Web browser → 127
- Via "FieldCare" operating tool → 129
- Via "DeviceCare" operating tool → 129

12.10 Event logbook

12.10.1 Reading out the event logbook

A chronological overview of the event messages that have occurred is provided in the **Events list** submenu.

Navigation path
Diagnostics menu → **Event logbook** submenu → Event list

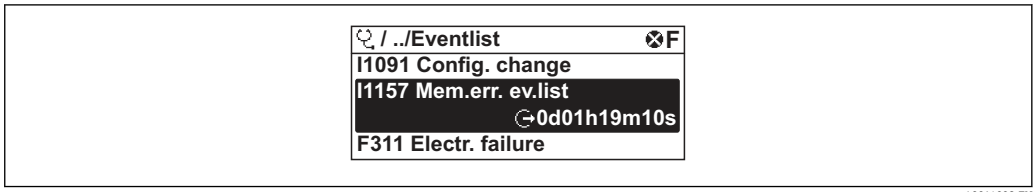

36 *Taking the example of the local display*

- A maximum of 20 event messages can be displayed in chronological order.
- If the **Extended HistoROM** application package (order option) is enabled in the device, the event list can contain up to 100 entries .

The event history includes entries for:
- Diagnostic events → 130
- Information events → 135

In addition to the operation time of its occurrence, each event is also assigned a symbol that indicates whether the event has occurred or is ended:
- Diagnostic event
  - : Occurrence of the event
  - : End of the event
- Information event
  : Occurrence of the event

To call up the measures to rectify a diagnostic event:
- Via local display → 126
- Via Web browser → 127
- Via "FieldCare" operating tool → 129
- Via "DeviceCare" operating tool → 129

For filtering the displayed event messages → 135

12.10.2 Filtering the event logbook

Using the **Filter options** parameter you can define which category of event message is displayed in the **Events list** submenu.

Navigation path
Diagnostics → Event logbook → Filter options

Filter categories
- All
- Failure (F)
- Function check (C)
- Out of specification (S)
- Maintenance required (M)
- Information (I)

12.10.3 Overview of information events

Unlike a diagnostic event, an information event is displayed in the event logbook only and not in the diagnostic list.

Info number	Info name
I1000	--------(Device ok)
I1079	Sensor changed

Info number	Info name
I1089	Power on
I1090	Configuration reset
I1091	Configuration changed
I1092	Embedded HistoROM deleted
I1137	Electronic changed
I1151	History reset
I1155	Reset electronic temperature
I1156	Memory error trend
I1157	Memory error event list
I1184	Display connected
I1256	Display: access status changed
I1278	I/O module reset detected
I1335	Firmware changed
I1351	Empty pipe detection adjustment failure
I1353	Empty pipe detection adjustment ok
I1361	Web server login failed
I1397	Fieldbus: access status changed
I1398	CDI: access status changed
I1443	Coating thickness not determined
I1444	Device verification passed
I1445	Device verification failed
I1457	Measured error verification failed
I1459	I/O module verification failed
I1461	Sensor verification failed
I1462	Sensor electronic module verific. failed
I1512	Download started
I1513	Download finished
I1514	Upload started
I1515	Upload finished
I1517	Custody transfer active
I1518	Custody transfer inactive
I1622	Calibration changed
I1624	Reset all totalizers
I1625	Write protection activated
I1626	Write protection deactivated
I1627	Web server login successful
I1628	Display login successful
I1629	CDI login successful
I1631	Web server access changed
I1632	Display login failed
I1633	CDI login failed
I1634	Parameter factory reset
I1635	Parameter delivery reset

Info number	Info name
I1643	Custody transfer logbook cleared
I1649	Hardware write protection activated
I1650	Hardware write protection deactivated
I1651	Custody transfer parameter changed
I1725	Sensor electronic module (ISEM) changed

12.11 Resetting the measuring device

Using the**Device reset** parameter (→ 108) it is possible to reset the entire device configuration or some of the configuration to a defined state.

12.11.1 Function scope of the "Device reset" parameter

Options	Description
Cancel	No action is executed and the user exits the parameter.
To delivery settings	Every parameter for which a customer-specific default setting was ordered is reset to this customer-specific value. All other parameters are reset to the factory setting.
Restart device	The restart resets every parameter whose data are in the volatile memory (RAM) to the factory setting (e.g. measured value data). The device configuration remains unchanged.

12.12 Device information

The **Device information** submenu contains all parameters that display different information for device identification.

Navigation
"Diagnostics" menu → Device information

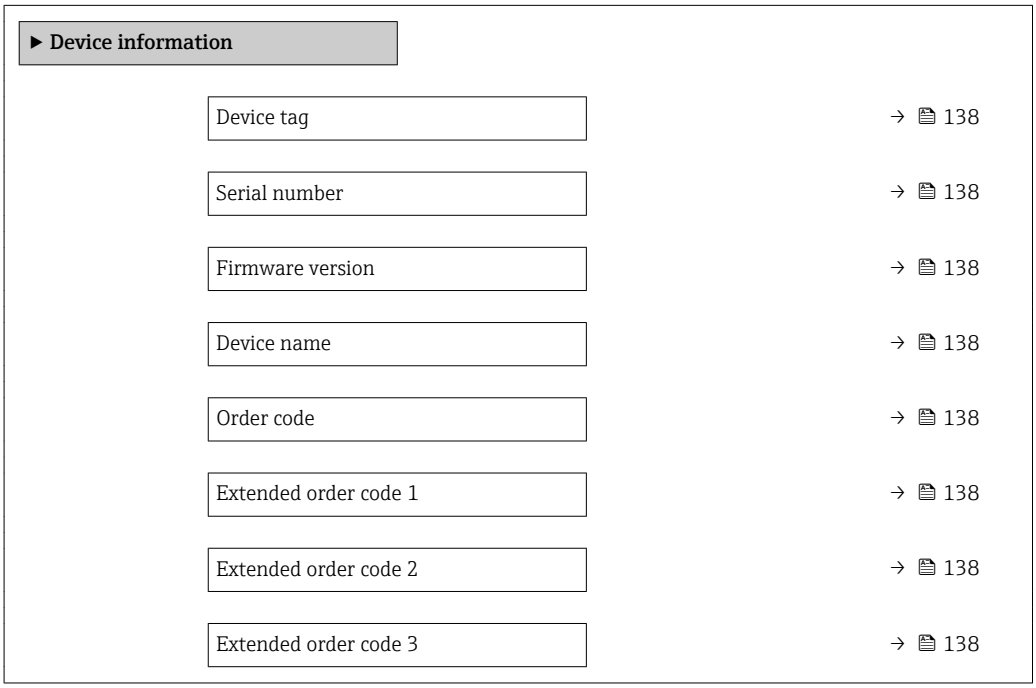

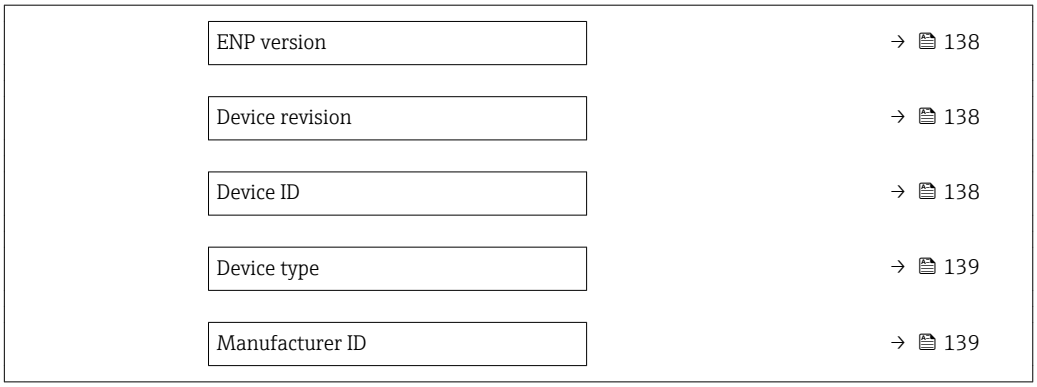

Parameter overview with brief description

Parameter	Description	User interface	Factory setting
Device tag	Shows name of measuring point.	Max. 32 characters, such as letters, numbers or special characters (e.g. @, %, /).	Promag 400
Serial number	Shows the serial number of the measuring device.	A maximum of 11-digit character string comprising letters and numbers.	–
Firmware version	Shows the device firmware version installed.	Character string in the format xx.yy.zz	–
Device name	Shows the name of the transmitter. The name can be found on the nameplate of the transmitter.	Max. 32 characters such as letters or numbers.	Promag 400
Order code	Shows the device order code. The order code can be found on the nameplate of the sensor and transmitter in the "Order code" field.	Character string composed of letters, numbers and certain punctuation marks (e.g. /).	–
Extended order code 1	Shows the 1st part of the extended order code. The extended order code can also be found on the nameplate of the sensor and transmitter in the "Ext. ord. cd." field.	Character string	–
Extended order code 2	Shows the 2nd part of the extended order code. The extended order code can also be found on the nameplate of the sensor and transmitter in the "Ext. ord. cd." field.	Character string	–
Extended order code 3	Shows the 3rd part of the extended order code. The extended order code can also be found on the nameplate of the sensor and transmitter in the "Ext. ord. cd." field.	Character string	–
ENP version	Shows the version of the electronic nameplate (ENP).	Character string	2.02.00
Device revision	Shows the device revision with which the device is registered with the HART Communication Foundation.	2-digit hexadecimal number	8
Device ID	Shows the device ID for identifying the device in a HART network.	6-digit hexadecimal number	–

Parameter	Description	User interface	Factory setting
Device type	Shows the device type with which the measuring device is registered with the HART Communication Foundation.	2-digit hexadecimal number	0x69 (for Promag 400)
Manufacturer ID	Shows the manufacturer ID device is registered with the HART Communication Foundation.	2-digit hexadecimal number	0x11 (for Endress+Hauser)

12.13 Firmware history

Release date	Firmware version	Order code for "Firmware version"	Firmware changes	Documentation type	Documentation
10.2013	01.04.00	Option **76**	Original firmware	Operating Instructions	BA01062D/06/EN/02.13
05.2014	01.05.00	Option **73**	▪ In accordance with HART 7 Specification ▪ Integrated HART input ▪ SD03 keypad lock ▪ Modification of SIL functionality ▪ HistoROM data logging in FieldCare "HistoROM" module ▪ Simulation of diagnostic events ▪ Ability to access Heartbeat Technology application package	Operating Instructions	BA01062D/06/EN/03.14
11.2016	02.00.00	Option **71**	Device type ID: 0x69 ▪ Web server: current version ▪ Logbook: current concept, including parameter change ▪ Upload/download: current concept ▪ Heartbeat Technology: new hardware, diagnostics, events ▪ Security concept: encrypted password transmission ▪ WLAN	Operating Instructions	BA01062D/06/EN/05.16

It is possible to flash the firmware to the current version or the previous version using the service interface.

For the compatibility of the firmware version with the previous version, the installed device description files and operating tools, observe the information about the device in the "Manufacturer's information" document.

The manufacturer's information is available:
- In the Download Area of the Endress+Hauser web site: www.endress.com → Downloads
- Specify the following details:
  - Text search: Manufacturer's information
  - Media type: Documentation – Technical Documentation

13 Maintenance

13.1 Maintenance tasks

No special maintenance work is required.

13.1.1 Exterior cleaning

When cleaning the exterior of measuring devices, always use cleaning agents that do not attack the surface of the housing or the seals.

⚠ WARNING

Cleaning agents can damage the plastic transmitter housing!

- ▶ Do not use high-pressure steam.
- ▶ Only use the permitted cleaning agents specified.

Permitted cleaning agents for the plastic transmitter housing

- Commercially available household cleaners
- Methyl alcohol or isopropyl alcohol
- Mild soap solutions

13.1.2 Interior cleaning

No interior cleaning is planned for the device.

13.1.3 Replacing seals

The sensor's seals (particularly aseptic molded seals) must be replaced periodically.

The interval between changes depends on the frequency of the cleaning cycles, the cleaning temperature and the medium temperature.

Replacement seals (accessory part) → 🖹 176

13.2 Measuring and test equipment

Endress+Hauser offers a wide variety of measuring and test equipment, such as W@M or device tests.

Your Endress+Hauser Sales Center can provide detailed information on the services.

List of some of the measuring and testing equipment: → 🖹 143

13.3 Endress+Hauser services

Endress+Hauser offers a wide variety of services for maintenance such as recalibration, maintenance service or device tests.

Your Endress+Hauser Sales Center can provide detailed information on the services.

14 Repairs

14.1 General notes

14.1.1 Repair and conversion concept

The Endress+Hauser repair and conversion concept provides for the following:
- The measuring devices have a modular design.
- Spare parts are grouped into logical kits with the associated Installation Instructions.
- Repairs are carried out by Endress+Hauser Service or by appropriately trained customers.
- Certified devices can only be converted to other certified devices by Endress+Hauser Service or at the factory.

14.1.2 Notes for repair and conversion

For repair and modification of a measuring device, observe the following notes:
- ▶ Use only original Endress+Hauser spare parts.
- ▶ Carry out the repair according to the Installation Instructions.
- ▶ Observe the applicable standards, federal/national regulations, Ex documentation (XA) and certificates.
- ▶ Document every repair and each conversion and enter them into the *W@M* life cycle management database.

14.2 Spare parts

W@M Device Viewer (www.endress.com/deviceviewer):
All the spare parts for the measuring device, along with the order code, are listed here and can be ordered. If available, users can also download the associated Installation Instructions.

Measuring device serial number:
- Is located on the nameplate of the device.
- Can be read out via the **Serial number** parameter (→ 138) in the **Device information** submenu.

14.3 Endress+Hauser services

Endress+Hauser offers a wide range of services.

Your Endress+Hauser Sales Center can provide detailed information on the services.

14.4 Return

The measuring device must be returned if it is need of repair or a factory calibration, or if the wrong measuring device has been delivered or ordered. Legal specifications require Endress+Hauser, as an ISO-certified company, to follow certain procedures when handling products that are in contact with the medium.

To ensure safe, swift and professional device returns, please refer to the procedure and conditions for returning devices provided on the Endress+Hauser website at http://www.endress.com/support/return-material

14.5 Disposal

14.5.1 Removing the measuring device

1. Switch off the device.

⚠ WARNING

Danger to persons from process conditions.

- Beware of hazardous process conditions such as pressure in the measuring device, high temperatures or aggressive fluids.

2. Carry out the mounting and connection steps from the "Mounting the measuring device" and "Connecting the measuring device" sections in reverse order. Observe the safety instructions.

14.5.2 Disposing of the measuring device

⚠ WARNING

Danger to personnel and environment from fluids that are hazardous to health.

- Ensure that the measuring device and all cavities are free of fluid residues that are hazardous to health or the environment, e.g. substances that have permeated into crevices or diffused through plastic.

Observe the following notes during disposal:

- Observe valid federal/national regulations.
- Ensure proper separation and reuse of the device components.

15 Accessories

Various accessories, which can be ordered with the device or subsequently from Endress +Hauser, are available for the device. Detailed information on the order code in question is available from your local Endress+Hauser sales center or on the product page of the Endress+Hauser website: www.endress.com.

15.1 Device-specific accessories

15.1.1 For the transmitter

Accessories	Description
Display protection	Is used to protect the display against impact or scoring from sand in desert areas. For details, see Special Documentation SD00333F
Connecting cable for remote version	Coil current and electrode cables, various lengths, reinforced cables available on request.
Ground cable	Set, consisting of two ground cables for potential equalization.
Post mounting kit	Post mounting kit for transmitter.
Compact → Remote conversion kit	For converting a compact device version to a remote device version.
Conversion kit Promag 50/53 → Promag 400	For converting a Promag with transmitter 50/53 to a Promag 400.

15.1.2 For the sensor

Accessories	Description
Ground disks	Are used to ground the medium in lined measuring tubes to ensure proper measurement. For details, see Installation Instructions EA00070D

15.2 Communication-specific accessories

Accessories	Description
Commubox FXA195 HART	For intrinsically safe HART communication with FieldCare via the USB interface. For details, see "Technical Information" TI00404F
Commubox FXA291	Connects Endress+Hauser field devices with a CDI interface (= Endress+Hauser Common Data Interface) and the USB port of a computer or laptop. For details, see the "Technical Information" document TI405C/07
HART Loop Converter HMX50	Is used to evaluate and convert dynamic HART process variables to analog current signals or limit values. For details, see "Technical Information" TI00429F and Operating Instructions BA00371F
Wireless HART adapter SWA70	Is used for the wireless connection of field devices. The WirelessHART adapter can be easily integrated into field devices and existing infrastructures, offers data protection and transmission safety and can be operated in parallel with other wireless networks with minimum cabling complexity. For details, see Operating Instructions BA00061S

Fieldgate FXA320	Gateway for the remote monitoring of connected 4 to 20 mA measuring devices via a Web browser. For details, see "Technical Information" TI00025S and Operating Instructions BA00053S
Fieldgate FXA520	Gateway for the remote diagnostics and remote configuration of connected HART measuring devices via a Web browser. For details, see "Technical Information" TI00025S and Operating Instructions BA00051S
Field Xpert SFX350	Field Xpert SFX350 is a mobile computer for commissioning and maintenance. It enables efficient device configuration and diagnostics for HART devices and can be used in non-hazardous areas. For details, see Operating Instructions BA01202S
Field Xpert SFX370	Field Xpert SFX370 is a mobile computer for commissioning and maintenance. It enables efficient device configuration and diagnostics for HART devices and can be used in the non-hazardous area and in the hazardous area. For details, see Operating Instructions BA01202S

15.3 Service-specific accessories

Accessories	Description
Applicator	Software for selecting and sizing Endress+Hauser measuring devices: ▪ Choice of measuring devices for industrial requirements ▪ Calculation of all the necessary data for identifying the optimum flowmeter: e.g. nominal diameter, pressure loss, flow velocity and accuracy. ▪ Graphic illustration of the calculation results ▪ Determination of the partial order code, administration, documentation and access to all project-related data and parameters over the entire life cycle of a project. Applicator is available: ▪ Via the Internet: https://wapps.endress.com/applicator ▪ As a downloadable DVD for local PC installation.
W@M	W@M Life Cycle Management Improved productivity with information at your fingertips. Data relevant to a plant and its components is generated from the first stages of planning and during the asset's complete life cycle. W@M Life Cycle Management is an open and flexible information platform with online and on-site tools. Instant access for your staff to current, in-depth data shortens your plant's engineering time, speeds up procurement processes and increases plant uptime. Combined with the right services, W@M Life Cycle Management boosts productivity in every phase. For more information, visit www.endress.com/lifecyclemanagement
FieldCare	FDT-based plant asset management tool from Endress+Hauser. It can configure all smart field units in your system and helps you manage them. By using the status information, it is also a simple but effective way of checking their status and condition. For details, see Operating Instructions BA00027S and BA00059S
DeviceCare	Tool for connecting and configuring Endress+Hauser field devices. For details, see Innovation brochure IN01047S

15.4 System components

Accessories	Description
Memograph M graphic data manager	The Memograph M graphic data manager provides information on all the relevant measured variables. Measured values are recorded correctly, limit values are monitored and measuring points analyzed. The data are stored in the 256 MB internal memory and also on a SD card or USB stick. For details, see "Technical Information" TI00133R and Operating Instructions BA00247R

16 Technical data

16.1 Application

The measuring device is only suitable for flow measurement of liquids with a minimum conductivity of 5 µS/cm.

Depending on the version ordered, the measuring device can also measure potentially explosive, flammable, poisonous and oxidizing media.

To ensure that the device remains in proper operating condition for its service life, use the measuring device only for media against which the process-wetted materials are sufficiently resistant.

16.2 Function and system design

Measuring principle

Electromagnetic flow measurement on the basis of *Faraday's law of magnetic induction*.

Measuring system

The device consists of a transmitter and a sensor.

Two device versions are available:
- Compact version – transmitter and sensor form a mechanical unit.
- Remote version - transmitter and sensor are mounted in separate locations.

For information on the structure of the device

16.3 Input

Measured variable

Direct measured variables

- Volume flow (proportional to induced voltage)
- Electrical conductivity

Calculated measured variables

Mass flow

Measuring range

Typically v = 0.01 to 10 m/s (0.03 to 33 ft/s) with the specified accuracy

Electrical conductivity: ≥ 5 µS/cm for liquids in general

Flow characteristic values in SI units

Nominal diameter		Recommended flow	Factory settings		
		min./max. full scale value (v ~ 0.3/10 m/s)	Full scale value current output (v ~ 2.5 m/s)	Pulse value (~ 2 pulse/s)	Low flow cut off (v ~ 0.04 m/s)
[mm]	[in]	[m³/h]	[m³/h]	[m³]	[m³/h]
25	1	9 to 300 dm³/min	75 dm³/min	0.5 dm³	1 dm³/min
32	–	15 to 500 dm³/min	125 dm³/min	1.0 dm³	2 dm³/min
40	1 ½	25 to 700 dm³/min	200 dm³/min	1.5 dm³	3 dm³/min
50	2	35 to 1 100 dm³/min	300 dm³/min	2.5 dm³	5 dm³/min
65	–	60 to 2 000 dm³/min	500 dm³/min	5 dm³	8 dm³/min

Nominal diameter		Recommended flow	Factory settings		
		min./max. full scale value (v ~ 0.3/10 m/s)	Full scale value current output (v ~ 2.5 m/s)	Pulse value (~ 2 pulse/s)	Low flow cut off (v ~ 0.04 m/s)
[mm]	[in]	[m³/h]	[m³/h]	[m³]	[m³/h]
80	3	90 to 3 000 dm³/min	750 dm³/min	5 dm³	12 dm³/min
100	4	145 to 4 700 dm³/min	1 200 dm³/min	10 dm³	20 dm³/min
125	–	220 to 7 500 dm³/min	1 850 dm³/min	15 dm³	30 dm³/min
150	6	20 to 600	150	0.025	2.5
200	8	35 to 1 100	300	0.05	5
250	10	55 to 1 700	500	0.05	7.5
300	12	80 to 2 400	750	0.1	10
350	14	110 to 3 300	1 000	0.1	15
375	15	140 to 4 200	1 200	0.15	20
400	16	140 to 4 200	1 200	0.15	20
450	18	180 to 5 400	1 500	0.25	25
500	20	220 to 6 600	2 000	0.25	30
600	24	310 to 9 600	2 500	0.3	40
700	28	420 to 13 500	3 500	0.5	50
750	30	480 to 15 000	4 000	0.5	60
800	32	550 to 18 000	4 500	0.75	75
900	36	690 to 22 500	6 000	0.75	100
1 000	40	850 to 28 000	7 000	1	125
–	42	950 to 30 000	8 000	1	125
1 200	48	1 250 to 40 000	10 000	1.5	150
–	54	1 550 to 50 000	13 000	1.5	200
1 400	–	1 700 to 55 000	14 000	2	225
–	60	1 950 to 60 000	16 000	2	250
1 600	–	2 200 to 70 000	18 000	2.5	300
–	66	2 500 to 80 000	20 500	2.5	325
1 800	72	2 850 to 90 000	23 000	3	350
–	78	3 300 to 100 000	28 500	3.5	450
2 000	–	3 400 to 110 000	28 500	3.5	450
–	84	3 700 to 125 000	31 000	4.5	500
2 200	–	4 100 to 136 000	34 000	4.5	540
–	90	4 300 to 143 000	36 000	5	570
2 400	–	4 800 to 162 000	40 000	5.5	650

Flow characteristic values in US units

Nominal diameter		Recommended flow	Factory settings		
		min./max. full scale value (v ~ 0.3/10 m/s)	Full scale value current output (v ~ 2.5 m/s)	Pulse value (~ 2 pulse/s)	Low flow cut off (v ~ 0.04 m/s)
[in]	[mm]	[gal/min]	[gal/min]	[gal]	[gal/min]
1	25	2.5 to 80	18	0.2	0.25
1 ½	40	7 to 190	50	0.5	0.75
2	50	10 to 300	75	0.5	1.25
–	65	16 to 500	130	1	2
3	80	24 to 800	200	2	2.5
4	100	40 to 1250	300	2	4
8	200	155 to 4850	1200	10	15
10	250	250 to 7500	1500	15	30
12	300	350 to 10600	2400	25	45
14	350	500 to 15000	3600	30	60
15	375	600 to 19000	4800	50	60
16	400	600 to 19000	4800	50	60
18	450	800 to 24000	6000	50	90
20	500	1000 to 30000	7500	75	120
24	600	1400 to 44000	10500	100	180
28	700	1900 to 60000	13500	125	210
30	750	2150 to 67000	16500	150	270
32	800	2450 to 80000	19500	200	300
36	900	3100 to 100000	24000	225	360
40	1000	3800 to 125000	30000	250	480
42	–	4200 to 135000	33000	250	600
48	1200	5500 to 175000	42000	400	600
54	–	9 to 300 Mgal/d	75 Mgal/d	0.0005 Mgal/d	1.3 Mgal/d
–	1400	10 to 340 Mgal/d	85 Mgal/d	0.0005 Mgal/d	1.3 Mgal/d
60	–	12 to 380 Mgal/d	95 Mgal/d	0.0005 Mgal/d	1.3 Mgal/d
–	1600	13 to 450 Mgal/d	110 Mgal/d	0.0008 Mgal/d	1.7 Mgal/d
66	–	14 to 500 Mgal/d	120 Mgal/d	0.0008 Mgal/d	2.2 Mgal/d
72	1800	16 to 570 Mgal/d	140 Mgal/d	0.0008 Mgal/d	2.6 Mgal/d
78	–	18 to 650 Mgal/d	175 Mgal/d	0.0010 Mgal/d	3.0 Mgal/d
–	2000	20 to 700 Mgal/d	175 Mgal/d	0.0010 Mgal/d	2.9 Mgal/d
84	–	24 to 800 Mgal/d	190 Mgal/d	0.0011 Mgal/d	3.2 Mgal/d
–	2200	26 to 870 Mgal/d	210 Mgal/d	0.0012 Mgal/d	3.4 Mgal/d
90	–	27 to 910 Mgal/d	220 Mgal/d	0.0013 Mgal/d	3.6 Mgal/d
–	2400	31 to 1030 Mgal/d	245 Mgal/d	0.0014 Mgal/d	4.1 Mgal/d

Recommended measuring range

"Flow limit" section → 157

Operable flow range

Over 1000 : 1

Input signal

External measured values

Various pressure transmitters and temperature measuring devices can be ordered from Endress+Hauser: see "Accessories" section → 145

It is recommended to read in external measured values to calculate the following measured variables:
Corrected volume flow

HART protocol

The measured values are written from the automation system to the measuring device via the HART protocol. The pressure transmitter must support the following protocol-specific functions:
- HART protocol
- Burst mode

Status input

Maximum input values	▪ DC 30 V ▪ 6 mA
Response time	Adjustable: 5 to 200 ms
Input signal level	▪ Low signal: DC −3 to +5 V ▪ High signal: DC 12 to 30 V
Assignable functions	▪ Off ▪ Reset totalizers 1-3 separately ▪ Reset all totalizers ▪ Flow override

16.4 Output

Output signal

Current output

Current output	Can be set as: ▪ 4-20 mA NAMUR ▪ 4-20 mA US ▪ 4-20 mA HART ▪ 0-20 mA
Maximum output values	▪ DC 24 V (no flow) ▪ 22.5 mA
Load	0 to 700 Ω
Resolution	0.5 µA
Damping	Adjustable: 0.07 to 999 s
Assignable measured variables	▪ Volume flow ▪ Mass flow ▪ Flow velocity ▪ Conductivity ▪ Electronic temperature

Pulse/frequency/switch output

Function	▪ With the order code for "Output; Input", option **H**: output 2 can be set as a pulse or frequency output ▪ With the order code for "Output; Input", option **I**: output 2 and 3 can be set as a pulse, frequency or switch output
Version	Passive, open collector
Maximum input values	▪ DC 30 V ▪ 250 mA
Voltage drop	For 25 mA: ≤ DC 2 V
Pulse output	
Pulse width	Adjustable: 0.05 to 2 000 ms
Maximum pulse rate	10 000 Impulse/s
Pulse value	Adjustable
Assignable measured variables	▪ Volume flow ▪ Mass flow
Frequency output	
Output frequency	Adjustable: 0 to 12 500 Hz
Damping	Adjustable: 0 to 999 s
Pulse/pause ratio	1:1
Assignable measured variables	▪ Volume flow ▪ Mass flow ▪ Conductivity ▪ Flow velocity ▪ Electronic temperature
Switch output	
Switching behavior	Binary, conductive or non-conductive
Switching delay	Adjustable: 0 to 100 s
Number of switching cycles	Unlimited
Assignable functions	▪ Off ▪ On ▪ Diagnostic behavior ▪ Limit value: – Off – Volume flow – Mass flow – Conductivity – Flow velocity – Totalizer 1-3 – Electronic temperature ▪ Flow direction monitoring ▪ Status – Empty pipe detection – Low flow cut off

Signal on alarm

Depending on the interface, failure information is displayed as follows:

Current output 4 to 20 mA

4 to 20 mA

Failure mode	Choose from: ▪ 4 to 20 mA in accordance with NAMUR recommendation NE 43 ▪ 4 to 20 mA in accordance with US ▪ Min. value: 3.59 mA ▪ Max. value: 22.5 mA ▪ Freely definable value between: 3.59 to 22.5 mA ▪ Actual value ▪ Last valid value

0 to 20 mA

Failure mode	Choose from: ▪ Maximum alarm: 22 mA ▪ Freely definable value between: 0 to 22.5 mA

HART current output

Device diagnostics	Device condition can be read out via HART Command 48

Pulse/frequency/switch output

Pulse output	
Failure mode	Choose from: ▪ Actual value ▪ No pulses
Frequency output	
Failure mode	Choose from: ▪ Actual value ▪ 0 Hz ▪ Defined value: 0 to 12 500 Hz
Switch output	
Failure mode	Choose from: ▪ Current status ▪ Open ▪ Closed

Local display

Plain text display	With information on cause and remedial measures
Backlight	Red backlighting indicates a device error.

Status signal as per NAMUR recommendation NE 107

Interface/protocol

- Via digital communication:
  HART protocol
- Via service interface
  - CDI-RJ45 service interface
  - WLAN interface

Plain text display	With information on cause and remedial measures

Web server

Plain text display	With information on cause and remedial measures

Light emitting diodes (LED)

Status information	Status indicated by various light emitting diodes The following information is displayed depending on the device version: ▪ Supply voltage active ▪ Data transmission active ▪ Device alarm/error has occurred Diagnostic information via light emitting diodes

Low flow cut off

The switch points for low flow cut off are user-selectable.

Galvanic isolation

The following connections are galvanically isolated from each other:
- Inputs
- Outputs
- Power supply

Protocol-specific data

HART

- For information on the device description files
- For information on the dynamic variables and measured variables (HART device variables) → 77

16.5 Power supply

Terminal assignment

→ 40

Supply voltage

Transmitter

Order code for "Power supply"	terminal voltage		Frequency range
Option **L**	DC 24 V	±25%	–
	AC 24 V	±25%	50/60 Hz, ±4 Hz
	AC 100 to 240 V	−15 to +10%	50/60 Hz, ±4 Hz

Power consumption

Order code for "Output"	Maximum power consumption
Option **H**: 4-20mA HART, pulse/frequency/switch output, switch output	30 VA/8 W
Option **I**: 4-20mA HART, 2 x pulse/frequency/switch output, status input	30 VA/8 W

Current consumption

Transmitter

Order code for "Power supply"	Maximum Current consumption	Maximum switch-on current
Option **L**: AC 100 to 240 V	145 mA	25 A (< 5 ms)
Option **L**: AC/DC 24 V	350 mA	27 A (< 5 ms)

Power supply failure

- Totalizers stop at the last value measured.
- Configuration is retained in the plug-in memory (HistoROM DAT).
- Error messages (incl. total operated hours) are stored.

Electrical connection

→ 📄 43

Potential equalization

→ 📄 46

terminals

Transmitter

- Supply voltage cable: plug-in spring terminals for wire cross-sections 0.5 to 2.5 mm² (20 to 14 AWG)
- Signal cable: plug-in spring terminals for wire cross-sections 0.5 to 2.5 mm² (20 to 14 AWG)
- Electrode cable: spring terminals for wire cross-sections 0.5 to 2.5 mm² (20 to 14 AWG)
- Coil current cable: spring terminals for wire cross-sections 0.5 to 2.5 mm² (20 to 14 AWG)

Sensor connection housing

Spring terminals for wire cross-sections0.5 to 2.5 mm² (20 to 14 AWG)

Cable entries

Cable entry thread

- M20 x 1.5
- Via adapter:
  - NPT ½"
  - G ½"

Cable gland

- For standard cable: M20 × 1.5 with cable ⌀6 to 12 mm (0.24 to 0.47 in)
- For reinforced cable: M20 × 1.5 with cable ⌀9.5 to 16 mm (0.37 to 0.63 in)

If metal cable entries are used, use a grounding plate.

Cable specification

→ 📄 38

16.6 Performance characteristics

Reference operating conditions

- Error limits following DIN EN 29104, in future ISO 20456
- Water, typically +15 to +45 °C (+59 to +113 °F); 0.5 to 7 bar (73 to 101 psi)
- Data as indicated in the calibration protocol
- Accuracy based on accredited calibration rigs according to ISO 17025

Maximum measured error

Error limits under reference operating conditions

o.r. = of reading

Volume flow
- ±0.5 % o.r. ± 1 mm/s (0.04 in/s)
- Optional: ±0.2 % o.r. ± 2 mm/s (0.08 in/s)

Fluctuations in the supply voltage do not have any effect within the specified range.

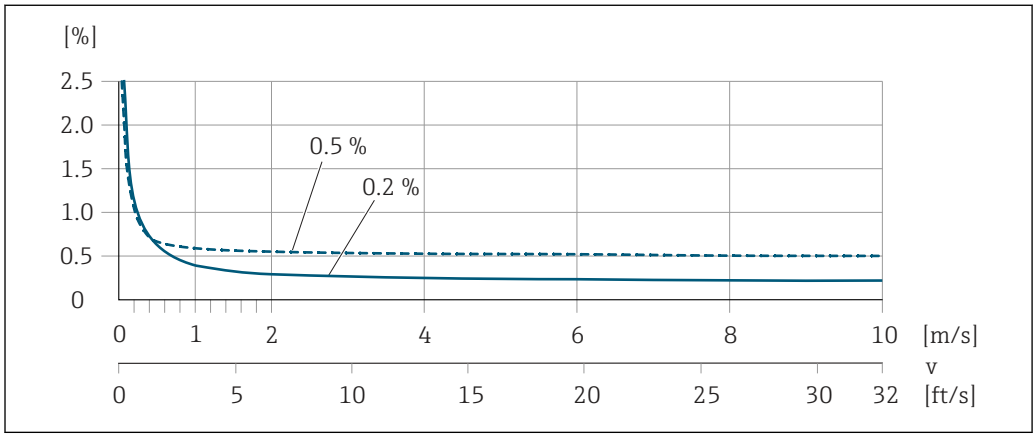

37 *Maximum measured error in % o.r.*

Electrical conductivity
Max. measured error not specified.

Accuracy of outputs

The outputs have the following base accuracy specifications.

Current output

Accuracy	Max. ±5 µA

Pulse/frequency output

o.r. = of reading

Accuracy	Max. ±50 ppm o.r. (over the entire ambient temperature range)

Repeatability

o.r. = of reading

Volume flow
max. ±0.1 % o.r. ± 0.5 mm/s (0.02 in/s)

Electrical conductivity
Max. ±5 % o.r.

Influence of ambient temperature

Current output

o.r. = of reading

Temperature coefficient	Max. ±0.005 % o.r./°C

Pulse/frequency output

Temperature coefficient	No additional effect. Included in accuracy.

16.7 Installation

"Mounting requirements"

16.8 Environment

Ambient temperature range	→ 23
Storage temperature	The storage temperature corresponds to the operating temperature range of the measuring transmitter and the appropriate measuring sensors.→ 23 ▪ Protect the measuring device against direct sunlight during storage in order to avoid unacceptably high surface temperatures. ▪ Select a storage location where moisture cannot collect in the measuring device as fungus or bacteria infestation can damage the liner. ▪ If protection caps or protective covers are mounted these should never be removed before installing the measuring device.
Atmosphere	If a plastic transmitter housing is permanently exposed to certain steam and air mixtures, this can damage the housing. If you are unsure, please contact your Endress+Hauser Sales Center for clarification.
Degree of protection	**Transmitter** ▪ As standard: IP66/67, type 4X enclosure ▪ When housing is open: IP20, type 1 enclosure **Sensor** ▪ As standard: IP66/67, type 4X enclosure ▪ Optionally available for remote version: – IP67, type 4X enclosure. Suitable for temporary immersion in water for up to 168 hours at depths ≤ 3 m (10 ft) or up to 48 hours at depths ≤ 10 m (30 ft). – IP68, type 6P enclosure (for DN ≤ 300 (12") only possible in conjunction with stainless steel flanges) Not suitable for use in corrosive atmospheres/liquids or in buried applications if special precautions are not taken.
Vibration resistance	**Compact version** ▪ Vibration, sinusoidal according to IEC 60068-2-6 – 2 to 8.4 Hz, 3.5 mm peak – 8.4 to 2 000 Hz, 1 g peak ▪ Vibration broad-band random, according to IEC 60068-2-64 – 10 to 200 Hz, 0.003 g^2/Hz – 200 to 2 000 Hz, 0.001 g^2/Hz – Total: 1.54 g rms **Remote version** ▪ Vibration, sinusoidal according to IEC 60068-2-6 – 2 to 8.4 Hz, 7.5 mm peak – 8.4 to 2 000 Hz, 2 g peak ▪ Vibration broad-band random, according to IEC 60068-2-64 – 10 to 200 Hz, 0.01 g^2/Hz – 200 to 2 000 Hz, 0.003 g^2/Hz – Total: 2.70 g rms

Shock resistance	Shock, half-sine according to IEC 60068-2-27 6 ms 50 g
Impact resistance	Rough handling shocks according to IEC 60068-2-31
Mechanical load	▪ Protect the transmitter housing against mechanical effects, such as shock or impact; the use of the remote version is sometimes preferable. ▪ Never use the transmitter housing as a ladder or climbing aid.
Electromagnetic compatibility (EMC)	▪ As per IEC/EN 61326 and NAMUR Recommendation 21 (NE 21) ▪ Complies with emission limits for industry as per EN 55011 (Class A) Details are provided in the Declaration of Conformity.

16.9 Process

Medium temperature range	▪ 0 to +80 °C (+32 to +176 °F) for hard rubber, DN 350 to 2400 (14 to 90") ▪ –20 to +50 °C (–4 to +122 °F) for polyurethane, DN 25 to 1200 (1 to 48") ▪ –20 to +90 °C (–4 to +194 °F) for PTFE, DN 25 to 300 (1 to 12")
Conductivity	≥ 5 µS/cm for liquids in general. Stronger filter damping is required for very low conductivity values. Note that in the case of the remote version, the requisite minimum conductivity also depends on the cable length → 25.
Pressure-temperature ratings	An overview of the pressure-temperature ratings for the process connections is provided in the "Technical Information" document

Pressure tightness

Liner: hard rubber, polyurethane

Nominal diameter		Liner	Limit values for absolute pressure in [mbar] ([psi]) for fluid temperatures:		
[mm]	[in]		+25 °C (+77 °F)	+50 °C (+122 °F)	+80 °C (+176 °F)
350...2400	14...90	Hard rubber	0 (0)	0 (0)	0 (0)
25...1200	1...48	Polyurethane	0 (0)	0 (0)	–

Liner: PTFE

Nominal diameter		Limit values for absolute pressure in [mbar] ([psi]) for fluid temperatures:	
[mm]	[in]	+25 °C (+77 °F)	+90 °C (+194 °F)
25	1	0 (0)	0 (0)
40	2	0 (0)	0 (0)
50	2	0 (0)	0 (0)
65	2 ½	0 (0)	40 (0.58)
80	3	0 (0)	40 (0.58)
100	4	0 (0)	135 (2.0)
125	5	135 (2.0)	240 (3.5)

Nominal diameter		Limit values for absolute pressure in [mbar] ([psi]) for fluid temperatures:	
[mm]	[in]	+25 °C (+77 °F)	+90 °C (+194 °F)
150	6	135 (2.0)	240 (3.5)
200	8	200 (2.9)	290 (4.2)
250	10	330 (4.8)	400 (5.8)
300	12	400 (5.8)	500 (7.3)

Flow limit

The diameter of the pipe and the flow rate determine the nominal diameter of the sensor. The optimum velocity of flow is between 2 to 3 m/s (6.56 to 9.84 ft/s). Also match the velocity of flow (v) to the physical properties of the fluid:

- v < 2 m/s (6.56 ft/s): for abrasive fluids (e.g. potter's clay, lime milk, ore slurry)
- v > 2 m/s (6.56 ft/s): for fluids producing buildup (e.g. wastewater sludge)

A necessary increase in the flow velocity can be achieved by reducing the sensor nominal diameter.

For an overview of the full scale values for the measuring range, see the "Measuring range" section → 146

Pressure loss

- No pressure loss occurs if the sensor is installed in a pipe with the same nominal diameter.
- Pressure losses for configurations incorporating adapters according to DIN EN 545 → 25

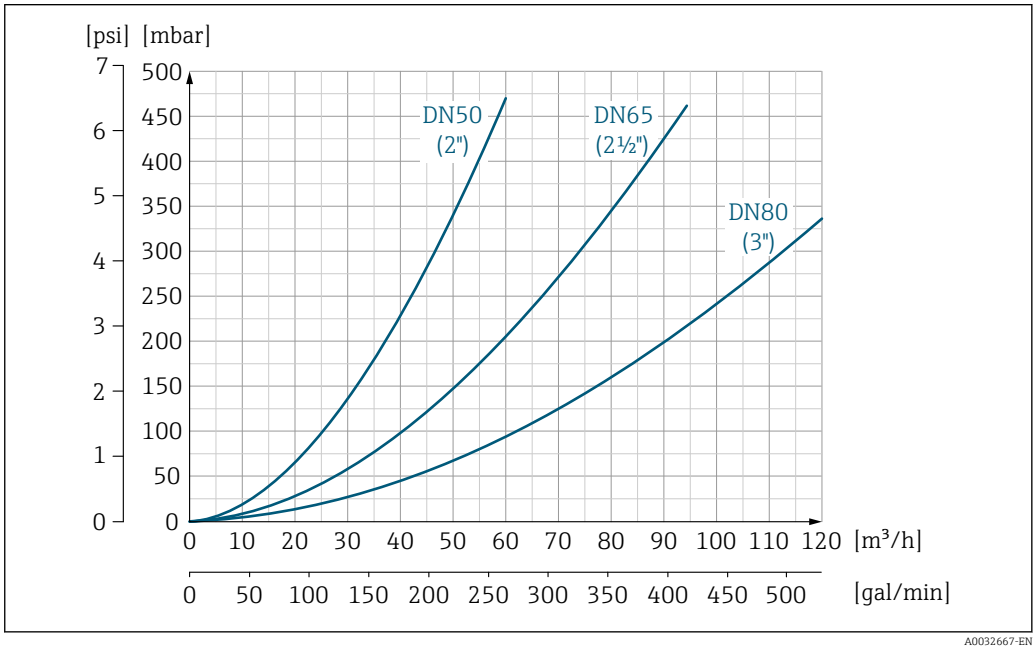

38 *Pressure loss DN 50 to 80 (2 to 3") in the case of order code for "Design", option C "Insertion length short ISO/DVGW to DN300, without inlet/outlet runs, constricted meas.tube"*

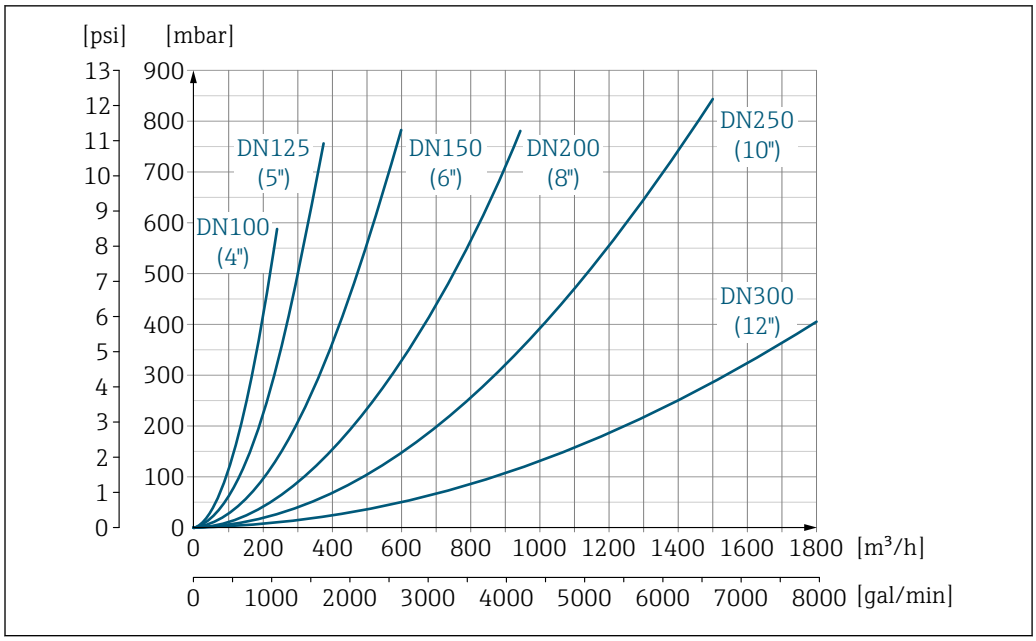

39 *Pressure loss DN 100 to 300 (4 to 12") in the case of order code for "Design", option C "Insertion length short ISO/DVGW to DN300, without inlet/outlet runs, constricted meas.tube"*

System pressure → 24

Vibrations → 24

16.10 Mechanical construction

Design, dimensions For the dimensions and installation lengths of the device, see the "Technical Information" document, "Mechanical construction" section.

Weight

Compact version

Weight data:
- Including the transmitter
  - Order code for *"Housing"*, option M, Q: 1.3 kg (2.9 lb)
  - Order code for *"Housing"*, option A, R: 2.0 kg (4.4 lb)
- Excluding packaging material

Weight in SI units

Lap joint flange; fixed flange DN ≥ 350

EN 1092-1 (DIN 2501)			
DN [mm]	Order code for "Housing", option M, Q Polycarbonate plastic [1]		
	Weight [kg]		
	PN 6	PN 10	PN 16
25	–	–	6.8
32	–	–	7.5
40	–	–	8.5
50	–	–	9

EN 1092-1 (DIN 2501)			
DN [mm]	Order code for "Housing", option M, Q Polycarbonate plastic [1]		
	Weight [kg]		
	PN 6	PN 10	PN 16
65	–	–	10
80	–	–	12
100	–	–	14
125	–	–	20
150	–	–	24
200	–	43	44.4
250	–	63	70.2
300	–	68	85.3
350	77	88	103
400	89	104	121
450	102	117	148
500	114	132	189
600	155	180	299
700	213	272	333
800	287	372	460
900	382	474	580
1000	491	613	793
1200	705	914	1312
1400	1124	1480	1904
1600	1519	2195	2696
1800	1999	2836	3685
2000	2775	3506	4644
2200	3063	4170	–
2400	3938	5033	–

1) Values for aluminum transmitter, AlSi10Mg, coated: + 0.7 kg

AS 2129, Table E	
DN [mm]	Weight [kg] Order code for "Housing", option M, Q Polycarbonate plastic [1]
350	99
400	120
450	150
500	182
600	279
700	348
750	456
800	516
900	737

AS 2129, Table E	
DN [mm]	Weight [kg] Order code for "Housing", option M, Q Polycarbonate plastic [1]
1000	854
1200	1366

1) Values for aluminum transmitter, AlSi10Mg, coated: + 0.7 kg

AS 4087, PN 16	
DN [mm]	Weight [kg] Order code for "Housing", option M, Q Polycarbonate plastic [1]
350	99
375	105
400	122
450	140
500	189
600	281
700	384
750	468
800	567
900	737
1000	852
1200	1366

1) Values for aluminum transmitter, AlSi10Mg, coated: + 0.7 kg

Lap joint flange, stamped plate

EN 1092-1 (DIN 2501), PN 10	
DN [mm]	Weight [kg] Order code for "Housing", option M, Q Polycarbonate plastic [1]
25	5.3
32	5.1
40	5.8
50	5
65	6
80	7
100	9
125	13
150	17
200	35

EN 1092-1 (DIN 2501), PN 10	
DN [mm]	Weight [kg] Order code for "Housing", option M, Q Polycarbonate plastic [1]
250	54
300	55

1) Values for aluminum transmitter, AlSi10Mg, coated: + 0.7 kg

Weight in US units

Lap joint flange; fixed flange DN ≥ 14"

ASME B16.5, Class 150	
DN [in]	Weight [lbs] Order code for "Housing", option M, Q Polycarbonate plastic [1]
1	11.6
1 ½	12.8
2	20
3	26
4	31
6	53
8	95
10	139
12	150
14	302
16	370
18	421
20	503
24	721

1) Values for aluminum transmitter, AlSi10Mg, coated: + 0.7 kg

AWWA C207, Class D	
DN [in]	Weight [lbs] Order code for "Housing", option M, Q Polycarbonate plastic [1]
28	608
30	740
32	881
36	1093
40	1463
42	1696
48	2278
54	3166
60	3930

AWWA C207, Class D	
DN [in]	Weight [lbs] Order code for "Housing", option M, Q Polycarbonate plastic [1]
66	5425
72	6295
78	7782
84	8556
90	10681

1) Values for aluminum transmitter, AlSi10Mg, coated: + 0.7 kg

Transmitter remote version

Wall-mount housing

Depends on the material of the wall-mount housing:
- Polycarbonate plastic: 1.3 kg (2.9 lb)
- Aluminum, AlSi10Mg, coated: 2.0 kg (4.4 lb)

Sensor remote version

Weight data:
- Including sensor connection housing
- Excluding the connecting cable
- Excluding packaging material

Weight in SI units

Lap joint flange; fixed flange DN ≥ 350

EN 1092-1 (DIN 2501)			
DN [mm]	Weight [kg]		
	PN 6	PN 10	PN 16
25	–	–	6.8
32	–	–	7.5
40	–	–	8.5
50	–	–	6
65	–	–	7
80	–	–	9
100	–	–	11
125	–	–	16
150	–	–	20
200	–	40	44.4
250	–	60	70.2
300	–	65	85.3
350	73	84	101
400	85	100	119
450	98	113	144
500	110	128	185
600	151	176	295

EN 1092-1 (DIN 2501)			
DN [mm]	Weight [kg]		
	PN 6	PN 10	PN 16
700	209	268	329
800	283	368	456
900	378	470	576
1000	487	609	789
1200	701	910	1308
1400	1120	1376	1900
1600	1515	2191	2692
1800	1995	2832	3681
2000	2771	3502	4640
2200	3059	4166	–
2400	3934	5029	–

AS 2129, Table E	
DN [mm]	Weight [kg]
350	95
400	116
450	146
500	178
600	275
700	344
750	452
800	512
900	733
1000	850
1200	1362

AS 4087, PN 16	
DN [mm]	Weight [kg]
350	95
375	101
400	118
450	136
500	185
600	277
700	380
750	464
800	563
900	733

AS 4087, PN 16	
DN [mm]	**Weight [kg]**
1000	848
1200	1362

Lap joint flange, stamped plate

EN 1092-1 (DIN 2501), PN 10	
DN [mm]	**[kg]**
25	6.0
32	5.8
40	6.5
50	3
65	4
80	5
100	7
125	11
150	15
200	33
250	52
300	53

Weight in US units

Lap joint flange; fixed flange DN ≥ 14"

ASME B16.5, Class 150	
DN [in]	**Weight [lbs]**
1	13.2
1 ½	14.3
2	13
3	20
4	24
6	44
8	88
10	132
12	143
14	296
15	–
16	364
18	415
20	497
24	715

AWWA C207, Class D	
DN [in]	Weight [lbs]
28	602
30	736
32	875
36	1087
40	1457
42	1690
48	2272
54	3160
60	3924
66	5419
72	6289
78	7776
84	8550
90	10675

Measuring tube specification

Nominal diameter		Pressure rating			Measuring tube internal diameter					
		EN (DIN)	ASME AWWA	AS 2129 AS 4087	Hard rubber		Polyurethane		PTFE	
[mm]	[in]				[mm]	[in]	[mm]	[in]	[mm]	[in]
25	1	PN 10/16	Class 150	–	–	–	23.7	0.9	25.3	1.0
32	1 ¼	PN 10/16	Class 150	–	–	–	32.4	1.3	34.0	1.3
40	1 ½	PN 10/16	Class 150	–	–	–	38.3	1.5	39.9	1.6
50	2	PN 10/16	Class 150	–	–	–	50.3	2.0	51.7	2.0
65 [1)]	2 ½	PN 10/16	Class 150	–	–	–	66.1	2.6	67.7	2.7
80	3	PN 10/16	Class 150	–	–	–	78.9	3.1	79.9	3.1
100	4	PN 10/16	Class 150	–	–	–	104.3	4.1	103.8	4.1
125	5	PN 10/16	Class 150	–	–	–	129.7	5.1	129.1	5.1
150	6	PN 10/16	Class 150	–	–	–	158.3	6.2	156.3	6.2
200	8	PN 10/16	Class 150	–	–	–	206.7	8.1	202.1	8.0
250	10	PN 10/16	Class 150	–	–	–	260.6	10.3	256.2	10.1
300	12	PN 10/16	–	–	–	–	311.5	12.3	305.5	12.0
300	12	–	Class 150	–	–	–	309.9	12.2	303.9	12.0
350	14	PN 6	–	–	341	13.4	344	13.5	–	–
350	14	PN 10	–	–	341	13.4	344	13.5	–	–
350	14	–	–	Table E, PN 16	337	13.2	340	13.3	–	–
350	14	–	Class 150	–	339	13.3	342	13.4	–	–
375	15	PN 10	–	–	391	15.4	–	–	–	–
375	15	–	–	PN 16	389	15.3	392	15.4	–	–
400	16	PN 6	–	–	391	15.4	394	13.5	–	–
400	16	PN 10	–	–	391	15.4	394	13.5	–	–
400	16	–	–	Table E, PN 16	389	15.3	392	13.4	–	–

Nominal diameter		Pressure rating			Measuring tube internal diameter					
		EN (DIN)	ASME AWWA	AS 2129 AS 4087	Hard rubber		Polyurethane		PTFE	
[mm]	[in]				[mm]	[in]	[mm]	[in]	[mm]	[in]
400	16	–	Class 150	–	387	15.2	390	13.3	–	–
450	18	PN 6	–	–	442	17.4	445	17.5	–	–
450	18	PN 10	–	–	442	17.4	445	17.5	–	–
450	18	–	–	Table E, PN 16	440	17.3	443	17.4	–	–
450	18	–	Class 150	–	436	17.1	439	17.2	–	–
500	20	PN 6	–	–	493	19.4	496	19.5	–	–
500	20	PN 10	–	–	493	19.4	496	19.5	–	–
500	20	–	–	Table E, PN 16	489	19.2	492	19.3	–	–
500	20	–	Class 150	–	487	19.1	490	19.3	–	–
600	24	PN 6	–	–	595	23.4	598	23.5	–	–
600	24	PN 10	–	–	590	23.2	596	23.4	–	–
600	24	–	–	Table E, PN 16	591	23.2	594	23.4	–	–
600	24	–	Class 150	–	585	23.0	588	23.1	–	–
700	28	PN 6	–	–	696	27.4	699	27.5	–	–
700	28	PN 10	–	–	694	27.3	697	27.4	–	–
700	28	–	–	Table E, PN 16	690	27.2	693	27.3	–	–
700	28	–	Class D	–	694	27.3	697	27.4	–	–
750	30	–	–	Table E, PN 16	741	29.2	744	29.3	–	–
750	30	–	Class D	–	743	29.3	746	29.4	–	–
800	32	PN 6	–	–	796	31.3	799	31.5	–	–
800	32	PN 10	–	–	794	31.2	797	31.4	–	–
800	32	–	–	Table E, PN 16	788	31.0	791	31.1	–	–
800	32	–	Class D	–	794	31.3	797	31.4	–	–
900	36	PN 6	–	–	895	35.2	898	35.4	–	–
900	36	PN 10	–	–	893	35.1	896	35.2	–	–
900	36	–	–	Table E, PN 16	889	35.0	892	35.1	–	–
900	36	–	Class D	–	895	35.2	898	35.4	–	–
1000	40	PN 6	–	–	997	39.2	1000	39.3	–	–
1000	40	PN 10	–	–	995	39.1	998	39.3	–	–
1000	40	–	–	Table E, PN 16	991	39.0	994	39.1	–	–
1000	40	–	Class D	–	995	39.1	998	39.3	–	–
1050	42	PN 6	–	–	–	–	–	–	–	–
1050	42	PN 10	–	–	–	–	–	–	–	–
1050	42	–	–	Table E, PN 16	–	–	–	–	–	–
1050	42	–	Class D	–	1046	41.2	1049	41.3	–	–
1200	48	PN 6	–	–	1201	47.3	1204	47.4	–	–
1200	48	PN 10	–	–	1199	47.2	1202	47.3	–	–
1200	48	–	–	Table E, PN 16	1191	46.9	1194	47.0	–	–
1200	48	–	Class D	–	1195	47.0	1198	47.2	–	–
–	54	–	Class D	–	1345	53.8	–	–	–	–

Nominal diameter		Pressure rating			Measuring tube internal diameter					
		EN (DIN)	ASME AWWA	AS 2129 AS 4087	Hard rubber		Polyurethane		PTFE	
[mm]	[in]				[mm]	[in]	[mm]	[in]	[mm]	[in]
1400	–	PN 6	–	–	1401	55.1	–	–	–	–
1400	–	PN 10	–	–	1394	5578	–	–	–	–
–	60	–	Class D	–	1498	59.9	–	–	–	–
1600	–	PN 6	–	–	1599	62.9	–	–	–	–
1600	–	PN 10	–	–	1590	63.6	–	–	–	–
–	66	–	Class D	–	1646	65.8	1650	64.9	–	–
1800	72	PN 6	–	–	1799	70.8	1802	70.9	–	–
1800	72	PN 10	–	–	1790	71.6	1794	70.6	–	–
1800	72	–	Class D	–	1790	71.6	1794	70.6	–	–
2000	78	PN 6	–	–	1995	78.5	–	–	–	–
2000	78	PN 10	–	–	1990	79.6	–	–	–	–
2000	78	–	Class D	–	1986	79.4	–	–	–	–
–	84	–	Class D	–	2099	84.0	–	–	–	–
2200	–	PN 6	–	–	2194	87.8	–	–	–	–
2200	–	PN 10	–	–	2186	87.4	–	–	–	–
–	90	–	Class D	–	2246	89.8	–	–	–	–
2400	–	PN 6	–	–	2391	94.1	–	–	–	–
2400	–	PN 10	–	–	2386	95.4	–	–	–	–

1) Designed acc. to EN 1092-1 (not to DIN 2501)

Materials

Transmitter housing

Compact version, standard

- Order code for "Housing", option **A** "Compact, aluminum coated": Aluminum, AlSi10Mg, coated
- Order code for "Housing", option **M**: polycarbonate plastic
- Window material:
  - For order code for "Housing", option **A**: glass
  - For order code for "Housing", option **M**: plastic

Compact version, inclined

- Order code for "Housing", option **R** "Compact, aluminum coated": Aluminum, AlSi10Mg, coated
- Order code for "Housing", option **Q**: polycarbonate plastic
- Window material:
  - For order code for "Housing", option **R**: glass
  - For order code for "Housing", option **Q**: plastic

Remote version (wall-mount housing)

- Order code for "Housing", option **P** "Compact, aluminum coated": Aluminum, AlSi10Mg, coated
- Order code for "Housing", option **N**: polycarbonate plastic
- Window material:
  - For order code for "Housing", option **P**: glass
  - For order code for "Housing", option **N**: plastic

Cable entries/cable glands

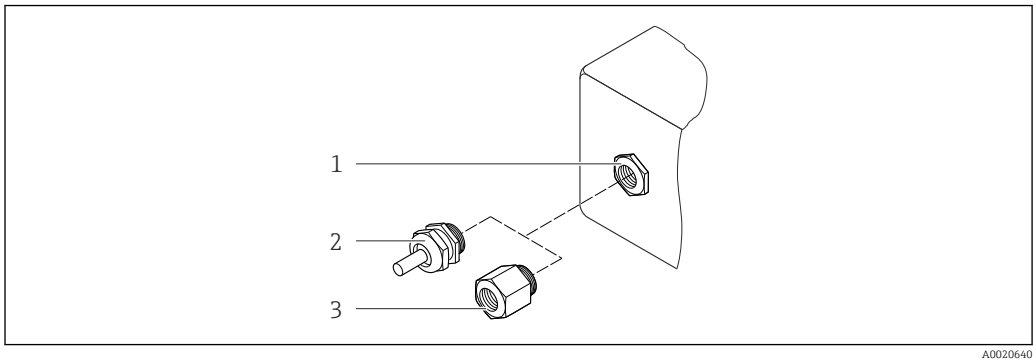

40 Possible cable entries/cable glands

1 Female thread M20 × 1.5
2 Cable gland M20 × 1.5
3 Adapter for cable entry with internal thread G ½" or NPT ½"

Compact and remote versions and sensor connection housing

Cable entry/cable gland	Material
Cable gland M20 × 1.5	Plastic
Remote version: cable gland M20 × 1.5 ▪ Option CK "IP68, Type 6P, waterproof" ▪ Option of reinforced connecting cable	▪ Sensor connection housing: Nickel-plated brass ▪ Transmitter wall-mount housing: Plastic
Adapter for cable entry with internal thread G ½" or NPT ½"	Nickel-plated brass

Connecting cable for remote version

Electrode and coil current cable
- Standard cable: PVC cable with copper shield
- Reinforced cable: PVC cable with copper shield and additional steel wire braided jacket

Sensor housing

- DN 25 to 300 (1 to 12"): aluminum, AlSi10Mg, coated
- DN 350 to 2400 (14 to 90"): carbon steel with protective varnish

Sensor connection housing

- Aluminum, AlSi10Mg, coated
- Option for order code for "Sensor option", option **CK**:
  Polycarbonate for DN 350 to 2 400 mm (13.8 to 94.5 in) for option IP68

Measuring tubes

- DN 25 to 300 (1 to 12"): stainless steel, 1.4301/1.4306/304L
- DN 350 to 1200 (14 to 48"): stainless steel, 1.4301/1.4307/304
- DN 1350 to 2400 (54 to 90"): stainless steel, 1.4301/1.4307

Liner

- DN 25 to 300 (1 to 12"): PTFE
- DN 25 to 1200 (1 to 48"): polyurethane
- DN 350 to 2400 (14 to 90"): hard rubber

Electrodes

- Stainless steel, 1.4435 (316L)
- Alloy C22, 2.4602 (UNS N06022)

Process connections

EN 1092-1 (DIN 2501)

DN 25 to 300:
- Fixed flange:
  - Stainless steel, 1.4306/1.4404/1.4571/F316L
  - Carbon steel, A105/E250C/S235JRG2
- Lap joint flange, stamped plate:
  - Stainless steel, 1.4301 similar to 304
  - Carbon steel, S235JRG2 similar to 1.0038 (S235JR+AR)
- DN 350 to 2400:
  Carbon steel, P245GH
- DN 350 to 600:
  Stainless steel ,1.4571
- DN 700 to 1000:
  Stainless steel ,1.4404

ASME B16.5

DN 25 to 300 (1 to 12"):
Fixed flange:
- Stainless steel, F316L similar to 1.4404
- Carbon steel, A105 similar to 1.0432

DN 350 to 600 (14 to 24"):
Carbon steel, A105
Stainless steel, F316/F316L

AWWA C207

- DN 48":
  Carbon steel, A105/A181/P265GH/A181 Class 70/IS 2062/E250C/P265GH/S275JR
- DN 54 to 90":
  Carbon steel, A105/A181/P265GH/A181 Class 70/IS 2062/E250C/S275JR

AS 2129

Carbon steel, A105/E250C/P235GH/P265GH/S235JRG2

AS 4087

Carbon steel, A105/P265GH/S275JRG2

Seals

As per DIN EN 1514-1, form IBC

Accessories

Display protection

Stainless steel, 1.4301 (304L)

Ground disks

- Stainless steel, 1.4435 (316L)
- Alloy C22, 2.4602 (UNS N06022)

Fitted electrodes	Measurement, reference and empty pipe detection electrodes available as standard with: ▪ 1.4435 (316L) ▪ Alloy C22, 2.4602 (UNS N06022)
Process connections	▪ EN 1092-1 – DN ≤ 300: lap joint flange (PN 10/16), lap joint flange, stamped plate (PN 10) = form A – DN ≥ 350: fixed flange (PN 6/10/16) = flat face ▪ ASME B16.5 – DN ≤ 300 (12"): lap joint flange (Class 150) – DN ≥ 350 (14"): fixed flange (Class 150) ▪ AWWA C207 DN 48 to 90": fixed flange (Class D) ▪ AS 2129 DN 350 to 1200: fixed flange (Table E) ▪ AS 4087 DN 350 to 1200: fixed flange (PN 16) All carbon steel lap joint flanges are supplied with a hot-dip galvanized finish. For information on the different materials used in the process connections → 169
Surface roughness	Electrodes with 1.4435 (316L); Alloy C22, 2.4602 (UNS N06022): ≤ 0.3 to 0.5 µm (11.8 to 19.7 µin) (All data relate to parts in contact with fluid)

16.11 Operability

Languages	Can be operated in the following languages: ▪ Via local operation: English, German, French, Spanish, Italian, Dutch, Portuguese, Polish, Russian, Turkish, Chinese, Japanese, Bahasa (Indonesian), Vietnamese, Czech, Swedish ▪ Via "FieldCare", "DeviceCare" operating tool: English, German, French, Spanish, Italian, Chinese, Japanese ▪ Via Web browser English, German, French, Spanish, Italian, Dutch, Portuguese, Polish, Russian, Turkish, Chinese, Japanese, Bahasa (Indonesian), Vietnamese, Czech, Swedish
Local display	**Via display module** Two display modules are available: ▪ Standard: 4-line, illuminated, graphic display; touch control ▪ Optionally via order code for "Display", option **W1** "WLAN display": 4-line, illuminated, graphic display; touch control + WLAN Information about WLAN interface → 72

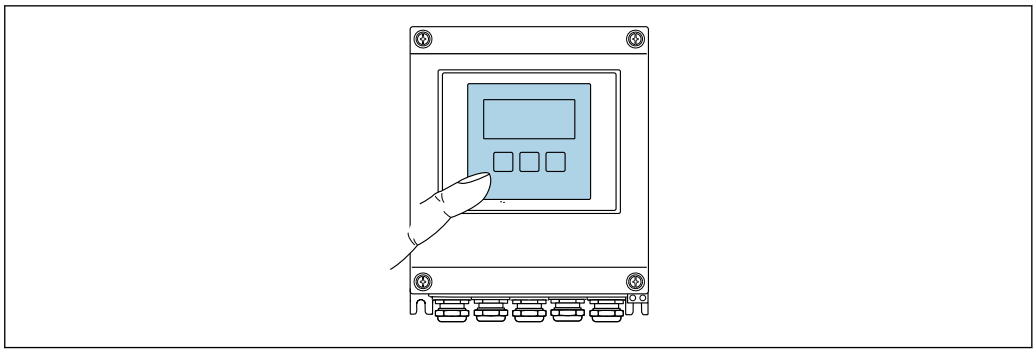

41 *Operation with touch control*

Display elements

- 4-line, illuminated, graphic display
- White background lighting; switches to red in event of device errors
- Format for displaying measured variables and status variables can be individually configured
- Permitted ambient temperature for the display: –20 to +60 °C (–4 to +140 °F)
  The readability of the display may be impaired at temperatures outside the temperature range.

Operating elements

- External operation via touch control (3 optical keys) without opening the housing: ⊞, ⊟, Ⓔ
- Operating elements also accessible in the various zones of the hazardous area

Remote operation

→ 🖹 72

Service interface

→ 🖹 72

Supported operating tools

Different operating tools can be used for local or remote access to the measuring device. Depending on the operating tool used, access is possible with different operating units and via a variety of interfaces.

Supported operating tools	Operating unit	Interface	Additional information
Web browser	Notebook, PC or tablet with Web browser	▪ CDI-RJ45 service interface ▪ WLAN interface	Special Documentation for device
DeviceCare SFE100	Notebook, PC or tablet with Microsoft Windows system	▪ CDI-RJ45 service interface ▪ WLAN interface ▪ Fieldbus protocol	→ 🖹 144

Supported operating tools	Operating unit	Interface	Additional information
FieldCare SFE500	Notebook, PC or tablet with Microsoft Windows system	▪ CDI-RJ45 service interface ▪ WLAN interface ▪ Fieldbus protocol	→ 144
Device Xpert	Field Xpert SFX 100/350/370	HART and FOUNDATION Fieldbus fieldbus protocol	Operating Instructions BA01202S Device description files: Use update function of handheld terminal

Other operating tools based on FDT technology with a device driver such as DTM/iDTM or DD/EDD can be used for device operation. These operating tools are available from the individual manufacturers. Integration into the following operating tools, among others, is supported:

- FactoryTalk AssetCentre (FTAC) by Rockwell Automation → www.rockwellautomation.com
- Process Device Manager (PDM) by Siemens → www.siemens.com
- Asset Management Solutions (AMS) by Emerson → www.emersonprocess.com
- FieldCommunicator 375/475 by Emerson → www.emersonprocess.com
- Field Device Manager (FDM) by Honeywell → www.honeywellprocess.com
- FieldMate by Yokogawa → www.yokogawa.com
- PACTWare → www.pactware.com

The associated device description files are available at: www.endress.com → Downloads

Web server

Thanks to the integrated Web server, the device can be operated and configured via a Web browser and via a service interface (CDI-RJ45) or via a WLAN interface. The structure of the operating menu is the same as for the local display. In addition to the measured values, status information on the device is also displayed and allows the user to monitor the status of the device. Furthermore the device data can be managed and the network parameters can be configured.

A device that has a WLAN interface (can be ordered as an option) is required for the WLAN connection: order code for "Display", option **W1** "WLAN display": 4-line, illuminated; touch control + WLAN. The device acts as an Access Point and enables communication by computer or a mobile handheld terminal.

Supported functions
Data exchange between the operating unit (such as a notebook for example) and the measuring device:
- Upload the configuration from the measuring device (XML format, configuration backup)
- Save the configuration to the measuring device (XML format, restore configuration)
- Export event list (.csv file)
- Export parameter settings (.csv file or PDF file, document the measuring point configuration)
- Export the Heartbeat verification log (PDF file, only available with the "Heartbeat Verification" application package)
- Flash firmware version for device firmware upgrade, for instance
- Download driver for system integration
- Visualize up to 1000 saved measured values (only available with the **Extended HistoROM** application package → 175)

Webserver special documentation

HistoROM data management

The measuring device features HistoROM data management. HistoROM data management comprises both the storage and import/export of key device and process data, making operation and servicing far more reliable, secure and efficient.

When the device is delivered, the factory settings of the configuration data are stored as a backup in the device memory. This memory can be overwritten with an updated data record, for example after commissioning.

Additional information on the data storage concept

There are different types of data storage units in which device data are stored and used by the device:

	Device memory	T-DAT	S-DAT
Available data	▪ Device firmware package ▪ Driver for system integration e.g.: DD for HART	▪ Event history, such as diagnostic events ▪ Measured value memory ("Extended HistoROM" order option) ▪ Current parameter data record (used by firmware at run time) ▪ Maximum indicators (min/max values) ▪ Totalizer values	▪ Sensor data: diameter etc. ▪ Serial number ▪ User-specific access code (to use the "Maintenance" user role) ▪ Calibration data ▪ Device configuration (e.g. SW options, fixed I/O or multi I/O)
Storage location	Fixed on the user interface board in the connection compartment	Can be plugged into the user interface board in the connection compartment	In the sensor plug in the transmitter neck part

Data backup

Automatic

- The most important device data (sensor and transmitter) are automatically saved in the DAT modules
- If the transmitter or measuring device is replaced: once the T-DAT containing the previous device data has been exchanged, the new measuring device is ready for operation again immediately without any errors
- If the sensor is replaced: once the sensor has been replaced, new sensor data are transferred from the S-DAT in the measuring device and the measuring device is ready for operation again immediately without any errors

Data transfer

Manual

Transfer of a device configuration to another device using the export function of the specific operating tool, e.g. with FieldCare, DeviceCare or Web server: to duplicate the configuration or to store in an archive (e.g. for backup purposes)

Event list

Automatic

- Chronological display of up to 20 event messages in the events list
- If the **Extended HistoROM** application package (order option) is enabled: up to 100 event messages are displayed in the events list along with a time stamp, plain text description and remedial measures
- The events list can be exported and displayed via a variety of interfaces and operating tools e.g. DeviceCare, FieldCare or Web server

Data logging

Manual
If the **Extended HistoROM** application package (order option) is enabled:
- Record up to 1 000 measured values via 1 to 4 channels
- User configurable recording interval
- Record up to 250 measured values via each of the 4 memory channels
- Export the measured value log via a variety of interfaces and operating tools e.g. FieldCare, DeviceCare or web server

16.12 Certificates and approvals

CE mark	The measuring system is in conformity with the statutory requirements of the applicable EU Directives. These are listed in the corresponding EU Declaration of Conformity along with the standards applied. Endress+Hauser confirms successful testing of the device by affixing to it the CE mark.
C-Tick symbol	The measuring system meets the EMC requirements of the "Australian Communications and Media Authority (ACMA)".
Ex approval	The devices are certified for use in hazardous areas and the relevant safety instructions are provided in the separate "Control Drawing" document. Reference is made to this document on the nameplate.
Drinking water approval	▪ ACS ▪ KTW/W270 ▪ NSF 61 ▪ WRAS BS 6920
HART certification	**HART interface** The measuring device is certified and registered by the FieldComm Group. The measuring system meets all the requirements of the following specifications: ▪ Certified according to HART 7 ▪ The device can also be operated with certified devices of other manufacturers (interoperability)
Radio approval	The measuring device has radio approval. For detailed information on the radio approval, see the Special Documentation → 177
Other standards and guidelines	▪ EN 60529 Degrees of protection provided by enclosures (IP code) ▪ EN 61010-1 Safety requirements for electrical equipment for measurement, control and laboratory use - general requirements ▪ IEC/EN 61326 Emission in accordance with Class A requirements. Electromagnetic compatibility (EMC requirements). ▪ ANSI/ISA-61010-1 (82.02.01): 2004 Safety Requirements for Electrical Equipment for Measurement, Control and Laboratory Use - Part 1 General Requirements

- CAN/CSA-C22.2 No. 61010-1-04
  Safety Requirements for Electrical Equipment for Measurement, Control and Laboratory Use - Part 1 General Requirements
- NAMUR NE 21
  Electromagnetic compatibility (EMC) of industrial process and laboratory control equipment
- NAMUR NE 32
  Data retention in the event of a power failure in field and control instruments with microprocessors
- NAMUR NE 43
  Standardization of the signal level for the breakdown information of digital transmitters with analog output signal.
- NAMUR NE 53
  Software of field devices and signal-processing devices with digital electronics
- NAMUR NE 105
  Specifications for integrating fieldbus devices in engineering tools for field devices
- NAMUR NE 107
  Self-monitoring and diagnosis of field devices
- NAMUR NE 131
  Requirements for field devices for standard applications

16.13 Application packages

Many different application packages are available to enhance the functionality of the device. Such packages might be needed to address safety aspects or specific application requirements.

The application packages can be ordered with the device or subsequently from Endress+Hauser. Detailed information on the order code in question is available from your local Endress+Hauser sales center or on the product page of the Endress+Hauser website: www.endress.com.

Cleaning

Package	Description
Electrode cleaning circuit (ECC)	The electrode cleaning circuit (ECC) function has been developed to have a solution for applications where magnetite (Fe_3O_4) deposits frequently occur (e.g. hot water). Since magnetite is highly conductive this build up leads to measuring errors and ultimately to the loss of signal. The application package is designed to AVOID build up of highly conductive matter and thin layers (typical of magnetite).

Diagnostics functions

Package	Description
Extended HistoROM	Comprises extended functions concerning the event log and the activation of the measured value memory. Event log: Memory volume is extended from 20 message entries (standard version) to up to 100 entries. Data logging (line recorder): ▪ Memory capacity for up to 1000 measured values is activated. ▪ 250 measured values can be output via each of the 4 memory channels. The recording interval can be defined and configured by the user. ▪ Measured value logs can be accessed via the local display or operating tool e.g. FieldCare, DeviceCare or Web server.

Heartbeat Technology

Package	Description
Heartbeat Verification +Monitoring	**Heartbeat Verification** Meets the requirement for traceable verification to DIN ISO 9001:2008 Chapter 7.6 a) "Control of monitoring and measuring equipment". ▪ Functional testing in the installed state without interrupting the process. ▪ Traceable verification results on request, including a report. ▪ Simple testing process via local operation or other operating interfaces. ▪ Clear measuring point assessment (pass/fail) with high test coverage within the framework of manufacturer specifications. ▪ Extension of calibration intervals according to operator's risk assessment. **Heartbeat Monitoring** Continuously supplies data, which are characteristic of the measuring principle, to an external condition monitoring system for the purpose of preventive maintenance or process analysis. These data enable the operator to: ▪ Draw conclusions - using these data and other information - about the impact process influences (such as corrosion, abrasion, buildup etc.) have on the measuring performance over time. ▪ Schedule servicing in time. ▪ Monitor the process or product quality, e.g. gas pockets.

16.14 Accessories

Overview of accessories available for order → 143

16.15 Supplementary documentation

For an overview of the scope of the associated Technical Documentation, refer to the following:
- The *W@M Device Viewer* : Enter the serial number from the nameplate (www.endress.com/deviceviewer)
- The *Endress+Hauser Operations App*: Enter the serial number from the nameplate or scan the 2-D matrix code (QR code) on the nameplate.

Standard documentation

Technical Information

Measuring device	Documentation code
Promag L 400	TI01045D

Brief Operating Instructions

Brief Operating Instructions for the sensor

Measuring device	Documentation code
Proline Promag L	KA01265D

Measuring device	Documentation code
Promag 400	KA01263D

Description of device parameters

Measuring device	Documentation code
Promag 400	GP01043D

Supplementary device-dependent documentation

Special Documentation

Content	Documentation code
Web server	SD01811D
Heartbeat Technology	SD01847D
Display modules A309/A310	SD01793D

Installation Instructions

Contents	Comment
Installation instructions for spare part sets and accessories	▪ Access the overview of all the available spare part sets via *W@M Device Viewer* → 🖹 141 ▪ Accessories available for order with Installation Instructions → 🖹 143

Index

A

Access authorization to parameters
- Read access . . . 64
- Write access . . . 64

Access code . . . 64
- Incorrect input . . . 64

Adapters . . . 25
Adapting the diagnostic behavior . . . 129
Adapting the status signal . . . 129
Ambient temperature
- Influence . . . 154

Ambient temperature range . . . 23
AMS Device Manager . . . 75
- Function . . . 75

Application . . . 146
Applicator . . . 146
Approvals . . . 174

B

Burst Mode . . . 79

C

C-Tick symbol . . . 174
Cable entries
- Technical data . . . 153

Cable entry
- Degree of protection . . . 50

CE mark . . . 11, 174
Certificates . . . 174
Checklist
- Post-connection check . . . 50
- Post-installation check . . . 37

Cleaning
- Exterior cleaning . . . 140
- Interior cleaning . . . 140

Commissioning . . . 81
- Advanced settings . . . 99
- Configuring the measuring device . . . 81

Communication-specific data . . . 77
Conductivity . . . 156
Connecting cable . . . 38
Connecting the measuring device . . . 43
Connection
- see Electrical connection

Connection examples, potential equalization . . . 46
Connection preparations . . . 41
Connection tools . . . 40
Context menu
- Calling up . . . 59
- Closing . . . 59
- Explanation . . . 59

Current consumption . . . 153

D

Declaration of Conformity . . . 11
Define access code . . . 111, 112
Degree of protection . . . 50, 155
Design
- Measuring device . . . 14

Designated use . . . 10
Device components . . . 14
Device description files . . . 77
Device documentation
- Supplementary documentation . . . 8

Device locking, status . . . 114
Device name
- Sensor . . . 17
- Transmitter . . . 16

Device repair . . . 141
Device revision . . . 77
Device type ID . . . 77
DeviceCare . . . 75
- Device description file . . . 77

Diagnostic behavior
- Explanation . . . 125
- Symbols . . . 125

Diagnostic information
- Design, description . . . 125, 128
- DeviceCare . . . 128
- FieldCare . . . 128
- Light emitting diodes . . . 123
- Onsite display . . . 124
- Overview . . . 130
- Remedial measures . . . 130
- Web browser . . . 126

Diagnostic list . . . 134
Diagnostic message . . . 124
Diagnostics
- Symbols . . . 124

DIP switch
- see Write protection switch

Direct access . . . 61
Direct access code . . . 56
Disabling write protection . . . 111
Display
- see Local display

Display area
- For operational display . . . 54
- In the navigation view . . . 56

Display values
- For locking status . . . 114

Disposal . . . 142
Document
- Function . . . 6
- Symbols used . . . 6

Document function . . . 6
Down pipe . . . 21
Drinking water approval . . . 174

E

ECC . . . 105

Electrical connection
Degree of protection 50
Measuring device 38
Operating tools
Via service interface (CDI-RJ45) 72
Via WLAN interface 72
Web server 72
WLAN interface 72
Electromagnetic compatibility 156
Enabling write protection 111
Enabling/disabling the keypad lock 65
Endress+Hauser services
Maintenance 140
Repair 141
Environment
Ambient temperature 23
Impact resistance 156
Mechanical load 156
Shock resistance 156
Storage temperature 155
Vibration resistance 155
Error messages
see Diagnostic messages
Event list 134
Event logbook 134
Ex approval 174
Extended order code
Sensor 17
Transmitter 16
Exterior cleaning 140

F
Field Communicator
Function 76
Field Communicator 475 76
Field of application
Residual risks 11
Field Xpert
Function 73
Field Xpert SFX350 73
FieldCare 74
Device description file 77
Establishing a connection 74
Function 74
User interface 75
Filtering the event logbook 135
Firmware
Release date 77
Version 77
Firmware history 139
Fitted electrodes 170
Flow direction 22
Flow limit 157
Function check 81
Function range
Field Xpert 73
Function scope
AMS Device Manager 75
Field Communicator 76
Field Communicator 475 76
SIMATIC PDM 76
Functions
see Parameter

G
Galvanic isolation 152

H
Hardware write protection 112
HART certification 174
HART protocol
Device variables 77
Measured values 77
Heavy sensors 22
Help text
Calling up 62
Closing 62
Explanation 62

I
I/O electronics module 14, 45
Identifying the measuring device 15
Immersion in water 26
Impact resistance 156
Incoming acceptance 15
Influence
Ambient temperature 154
Information on the document 6
Inlet runs 23
Input 146
Input mask 57
Inspection
Installation 37
Received goods 15
Inspection check
Connection 50
Installation 21
Installation conditions
Adapters 25
Down pipe 21
Heavy sensors 22
Immersion in water 26
Inlet and outlet runs 23
Installation dimensions 23
Length of connecting cable 25
Mounting location 21
Orientation 22
Partially filled pipe 21
System pressure 24
Vibrations 24
Installation dimensions 23
Interior cleaning 140

L
Languages, operation options 170
Length of connecting cable 25
Line recorder 118
Local display 170
Editing view 57

Navigation view 55
see Operational display
Low flow cut off 152

M
Main electronics module 14
Maintenance tasks 140
Replacing seals 140
Manufacturer ID 77
Manufacturing date 16, 17
Materials 167
Maximum measured error 153
Measured variables
Calculated 146
Measured 146
see Process variables
Measuring and test equipment 140
Measuring device
Configuration 81
Conversion 141
Design 14
Disposal 142
Integrating via communication protocol 77
Mounting the sensor 27
Mounting the ground cable/ground disks 28
Mounting the seals 28
Screw tightening torques 28
Preparing for electrical connection 41
Preparing for mounting 27
Removing 142
Repairs 141
Switch-on 81
Measuring principle 146
Measuring range 146
Measuring system 146
Measuring tube specification 165
Mechanical load 156
Medium temperature range 156
Menu
Diagnostics 133
Setup 81, 82
Menus
For measuring device configuration 81
For specific settings 99
Mounting dimensions
see Installation dimensions
Mounting location 21
Mounting preparations 27
Mounting tools 27

N
Nameplate
Sensor 17
Transmitter 16
Navigation path (navigation view) 55
Navigation view
In the submenu 55
In the wizard 55
Numeric editor 57

O
Onsite display
see Diagnostic message
see In alarm condition
Operable flow range 149
Operating elements 59, 125
Operating keys
see Operating elements
Operating menu
Menus, submenus 52
Structure 52
Submenus and user roles 53
Operating philosophy 53
Operation 114
Operation options 51
Operational display 54
Operational safety 11
Order code 16, 17
Orientation (vertical, horizontal) 22
Outlet runs 23
Output 149
Output signal 149

P
Packaging disposal 20
Parameter
Changing 63
Entering a value 63
Parameter settings
Administration (Submenu) 108
Burst configuration 1 to n (Submenu) 79
Current output 1 (Wizard) 86
Data logging (Submenu) 118
Define access code (Wizard) 107
Device information (Submenu) 137
Diagnostics (Menu) 133
Display (Submenu) 102
Display (Wizard) 93
Electrode cleaning circuit (Submenu) 105
Empty pipe detection (Wizard) 98
For the status input 84
Input values (Submenu) 116
Low flow cut off (Wizard) 96
Output conditioning (Wizard) 94
Output values (Submenu) 116
Process variables (Submenu) 115
Pulse/frequency/switch output 1 to n (Wizard) 87, 88, 91
Reset access code (Submenu) 108
Sensor adjustment (Submenu) 100
Setup (Menu) 82
Simulation (Submenu) 108
Status input (Submenu) 84
System units (Submenu) 83
Totalizer (Submenu) 115
Totalizer 1 to n (Submenu) 100
Totalizer handling (Submenu) 117
Web server (Submenu) 71
WLAN Settings (Submenu) 105

Partially filled pipe 21
Performance characteristics 153
Post-connection check (checklist) 50
Post-installation check 81
Post-installation check (checklist) 37
Potential equalization 46
Power consumption 152
Power supply failure 153
Pressure loss 157
Pressure tightness 156
Pressure-temperature ratings 156
Process conditions
  Conductivity 156
  Flow limit 157
  Medium temperature 156
  Pressure loss 157
  Pressure tightness 156
Process connections 170
Product safety 11
Protecting parameter settings 111

R

Radio approval 174
Read access 64
Reading measured values 114
Recalibration 140
Reference operating conditions 153
Registered trademarks 9
Remedial measures
  Calling up 126
  Closing 126
Remote operation 171
Remote version
  Connecting the signal cables 43
Repair of a device 141
Repairs 141
  Notes 141
Repeatability 154
Replacement
  Device components 141
Replacing seals 140
Requirements for personnel 10
Return 141

S

Safety 10
Screw tightening torques 28
Sensor
  Mounting 27
Serial number 16, 17
Setting the operating language 81
Settings
  Adapting the measuring device to the process conditions 117
  Administration 106
  Advanced display configurations 102
  Current output 86
  Device reset 137
  Device tag 82
  Electrode cleaning circuit (ECC) 105
  Empty pipe detection (EPD) 98
  Low flow cut off 96
  Onsite display 93
  Operating language 81
  Output conditioning 94
  Pulse output 87
  Pulse/frequency/switch output 87, 88
  Resetting the totalizer 117
  Sensor adjustment 100
  Simulation 108
  Status input 84
  Switch output 91
  System units 83
  Totalizer 100
  Totalizer reset 117
  WLAN 105
Shock resistance 156
Showing data logging 118
Signal on alarm 150
SIMATIC PDM 76
  Function 76
Software release 77
Spare part 141
Spare parts 141
Special connection instructions 48
Standards and guidelines 174
Status area
  For operational display 54
  In the navigation view 56
Status signals 124, 127
Storage conditions 19
Storage temperature 19
Storage temperature range 155
Structure
  Operating menu 52
Submenu
  Administration 106, 108
  Advanced setup 99
  Burst configuration 1 to n 79
  Data logging 118
  Device information 137
  Display 102
  Electrode cleaning circuit 105
  Event list 134
  Input values 116
  Output values 114, 116
  Overview 53
  Process variables 115
  Reset access code 108
  Sensor adjustment 100
  Simulation 108
  Status input 84
  System units 83
  Totalizer 115
  Totalizer 1 to n 100
  Totalizer handling 117
  Web server 71
  WLAN Settings 105

Supplementary documentation 176
Supply unit
Requirements 41
Supply voltage 41, 152
Surface roughness 170
Symbols
For communication 54
For correction 57
For diagnostic behavior 54
For locking 54
For measured variable 54
For measurement channel number 54
For menus 56
For parameters 56
For status signal 54
For submenu 56
For wizard 56
In the status area of the local display 54
In the text and numeric editor 57
System design
Measuring system 146
see Measuring device design
System integration 77
System pressure 24

T

Technical data, overview 146
Temperature range
Ambient temperature range for display 170
Storage temperature 19
Terminal assignment 40, 43, 45
terminals 153
Text editor 57
Tool tip
see Help text
Tools
Electrical connection 40
For mounting 27
Transport 19
Totalizer
Configuration 100
Transmitter
Connecting the signal cables 45
Turning the display module 36
Turning the housing 34
Transporting the measuring device 19
Troubleshooting
General 121
Turning the display module 36
Turning the electronics housing
see Turning the transmitter housing
Turning the transmitter housing 34

U

Use of the measuring device
Borderline cases 10
Incorrect use 10
see Designated use
User interface
Current diagnostic event 133
Previous diagnostic event 133
User roles 53

V

Version data for the device 77
Vibration resistance 155
Vibrations 24

W

W@M 140, 141
W@M Device Viewer 15, 141
Weight
Compact version 158
Sensor remote version 162
Transport (notes) 19
Wizard
Current output 1 86
Define access code 107
Display 93
Empty pipe detection 98
Low flow cut off 96
Output conditioning 94
Pulse/frequency/switch output 1 to n 87, 88, 91
WLAN settings 105
Workplace safety 11
Write access 64
Write protection
Via access code 111
Via write protection switch 112
Write protection switch 112

www.addresses.endress.com

Endress+Hauser

People for Process Automation