TI01256T/09/EN/06.25-00
71724385
2025-01-27

Technical Information
iTHERM MultiSens Flex TMS01
Multipoint thermometer

Direct-contact RTD/TC multipoint thermometer for 3D temperature profiling, with flexible sensors and a diagnostics chamber for applications in the oil, gas, and petrochemical industries



Applications

- For use in the oil & gas and petrochemical industries
- Ideal for capturing a 3D temperature profile
- For installation with flanged process connections on vessels, reactors, and tanks
- For linear installation in existing thermowells.

Your benefits

- Spatial monitoring of the temperature profile through flexible sensor arrangement
- More accurate temperature profiling thanks to a high measuring point density using iTHERM ProfileSens sensor technology
- Easy installation, process integration, and maintenance thanks to modular product design and replaceable, standardised measuring elements
- Endress+Hauser iTEMP temperature transmitters support all common communication protocols and optional Bluetooth® connectivity.
- International certifications: explosion protection in accordance with ATEX, IECEx, EAC, functional safety (SIL)

Endress+Hauser
People for Process Automation

Table of contents

Function and system design 3
Measuring principle 3
Measuring system 3
Equipment architecture 4

Input 6
Measured variable 6
Measuring range 6

Output 7
Output signal 7
Family of temperature transmitters 7

Power supply 7
Wiring diagrams 8

Performance characteristics 11
Reference operating conditions 11
Maximum measurement error 11
Response time 12
Shock and vibration resistance 13
Calibration 14

Installation 14
Installation location 14
Orientation 14
Installation instructions 15

Environment 16
Ambient temperature range 16
Storage temperature 16
Relative humidity 16
Climate class 16
Degree of protection 16
Vibration-resistance and shock-resistance 16
Electromagnetic compatibility (EMC) 16

Process 17
Process temperature range 17
Process pressure range 17

Mechanical construction 17
Design, dimensions 17
Weight 21
Materials 21
Process connection 22

User operation 23

Certificates and approvals 23

Ordering information 23

Accessories 24
Device-specific accessories 24
Service-specific accessories 25

Documentation 26

Function and system design

Measuring principle

Thermocouples (TC)

Thermocouples are comparatively simple, robust temperature sensors which use the Seebeck effect for temperature measurement: if two electrical conductors made of different materials are connected at a point, a weak electrical voltage can be measured between the two open conductor ends if the conductors are subjected to a thermal gradient. This voltage is called thermoelectric voltage or electromotive force (emf). Its magnitude depends on the type of conducting materials and the temperature difference between the "measuring point" (the junction of the two conductors) and the "cold junction" (the open conductor ends). Accordingly, thermocouples primarily only measure differences in temperature. The absolute temperature at the measuring point can be determined from these if the associated temperature at the cold junction is known or is measured separately and compensated for. The material combinations and associated thermoelectric voltage/temperature characteristics of the most common types of thermocouple are standardized in the IEC 60584 and ASTM E230/ANSI MC96.1 standards.

Resistance thermometers (RTD assemblies)

Resistance thermometers use a Pt100 temperature sensor in accordance with IEC 60751. This temperature sensor is a temperature-sensitive platinum resistor with a resistance of 100 Ω at 0 °C (32 °F) and a temperature coefficient α = 0.003851 °C-1.

There are generally two different kinds of platinum resistance thermometers:

There are two different versions of platinum resistance thermometers:

- **Wire-wound (WW):WW** In these thermometers, a double coil of fine, high-purity platinum wire is accommodated in a ceramic support. This support is then sealed top and bottom with a ceramic protective layer. These resistance thermometers not only facilitate very reproducible measurements but also offer good long-term stability of the resistance/temperature characteristic within temperature ranges up to 600 °C (1 112 °F). This type of sensor is relatively large in size and is comparatively sensitive to vibrations.
- **Thin-film platinum resistance thermometers(TF):** A very thin, ultrapure platinum layer, approx. 1 µm thick, is vaporized in a vacuum on a ceramic substrate and then structured photolithographically. The platinum conductor paths formed in this way create the measuring resistance. Additional covering and passivation layers are applied and reliably protect the thin platinum layer from contamination and oxidation, even at high temperatures.

Measuring system

The manufacturer provides a complete portfolio of optimized components for the temperature measuring point – everything needed for seamless integration of the measuring point into the overall facility.

These include:

- Power supply unit/active barrier
- Configuration units
- Overvoltage protection

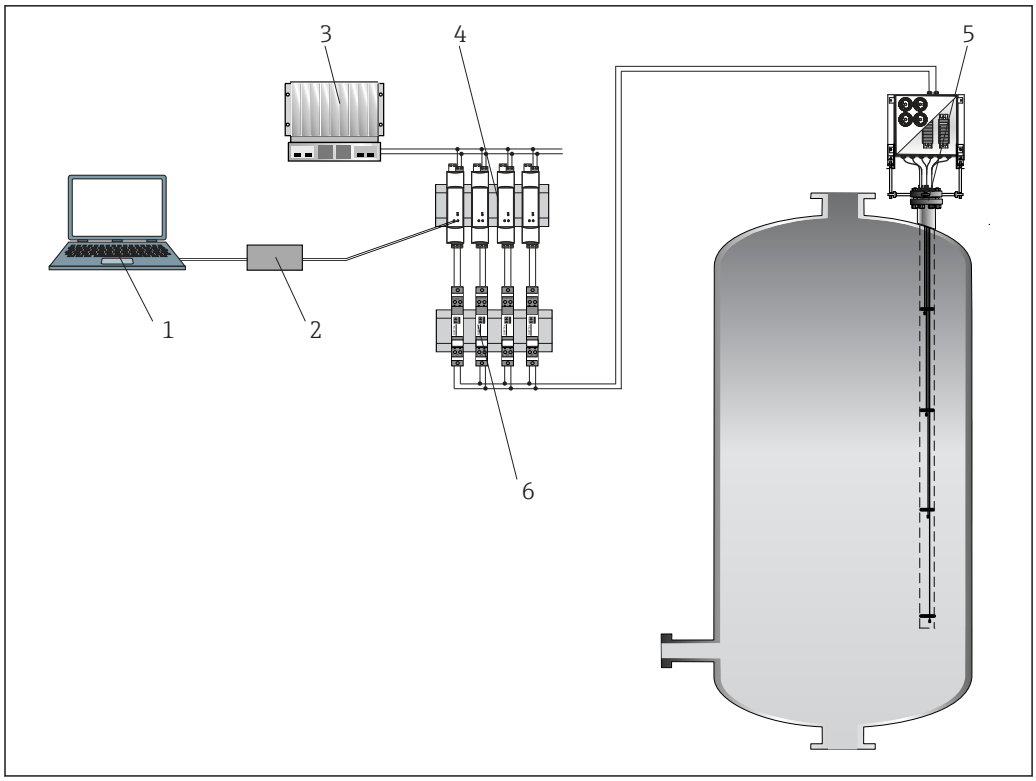

1 *Application example in a reactor, mounted multipoint thermometer in a thermowell available on site with four measurement points and four built-in transmitters or terminal blocks.*

1 *Device configuration with application software FieldCare*
2 *Commubox*
3 *PLC*
4 *Active barrier of the RN series (24 V_{DC}, 30 mA) with galvanically isolated output for the power supply of loop-powered transmitters. The universal power supply works with an input supply voltage of 20 to 250 V DC/AC; 50/60 Hz, which means that it can be used in all international power grids.*
5 *Mounted multipoint thermometer in a thermowell available on site, optionally with built-in transmitters in the junction box for 4 to 20 mA, HART, PROFIBUS® PA and FOUNDATION Fieldbus™ communication or with terminal blocks for remote wiring.*
6 *Overvoltage protection devices from the HAW product family for protection of signal lines and components in hazardous areas, e.g. 4 to 20 mA, PROFIBUS® PA and FOUNDATION Fieldbus™ signal lines. Further information is available in the corresponding Technical Information.*

Equipment architecture

The multipoint thermometer belongs to a series of modular products for multiple temperature measurements. The design allows for the replacement of individual subassemblies and components, making maintenance and spare parts management easier.

It consists of the following main subassemblies:

- **Single-point insert:** Consisting of a measuring element with metal sheathing (thermocouple or resistance thermometer), extension cable and bushing. If necessary, each insert can be treated as an individual spare part that can be replaced by releasing the compression fitting on the process connection. They can be ordered via specific standard product order codes (e.g. TSC310, TST310) or special codes. For the specific order code please contact the Endress+Hauser service department.
- **Multi-point insert:** Consisting of a number of independent thermocouple cables with metal sheathing in a probe, each of which is fitted with a potting seal and the relevant extension cable, resulting in a double-sealed design (Endress+Hauser ProfileSens).
- **Process connection:** ASME or EN flange; can be supplied with eyebolts for lifting the device.
- **Head:** Includes a junction box with the relevant components such as cable glands, draining valves, earth screws, terminals, head transmitters etc.
- **Neck:** It is designed to support the junction box by components such as supporting rods and plates or tube extension.
- **Additional accessories:** Components that can be ordered independently of the selected product configuration, e.g. clips, weld-on plates or blocks, sealing sleeves, centering stars and labels for sensor measuring point identification.
- **Thermowells:** These are directly welded to the process connection and designed to guarantee a higher degree of mechanical protection and corrosion resistance for each sensor.

In general, the system measures the temperature profile in the process environment using multiple sensors. These are connected to an appropriate process connection that ensures the process is leak-tight. On the other side, the extension cables are wired to the junction box, which can either be mounted directly or installed remotely.

Design		Description, available options and materials
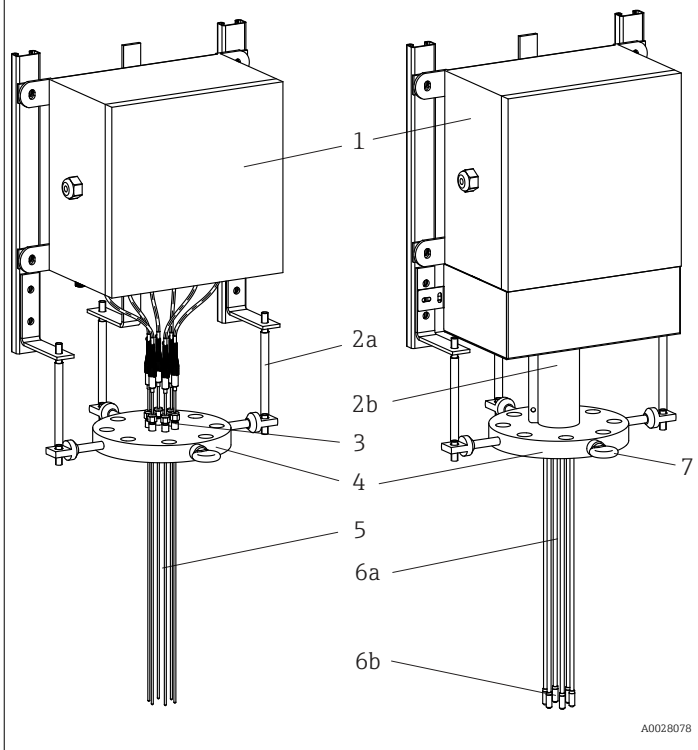	1: Head	Hinged cover junction box for electrical connections. It includes components such as electrical terminals, transmitters and cable glands. ▪ 316/316L ▪ Other materials on request
	2a: Support frame	Modular frame support that is adjustable for all available junction boxes. 316/316L
	2b: Tube neck	Modular tube support that is adjustable for all available junction boxes and ensures extension cable inspection. 316/316L
	3: Compression fitting	High-performance compression fitting to ensure leak-tightness between the process and external environment. For many process fluids and various combinations of high temperatures and pressures. ▪ 316L ▪ 316H
	4: Process connection	A flange according to international standards, or customized to satisfy specific process requirements. → 🖹 22 ▪ 304/304L ▪ 316/316L ▪ 316Ti ▪ 321 ▪ 347 ▪ Other materials on request
	5: Insert	▪ Mineral-insulated grounded and ungrounded thermocouples or RTDs (Pt100) ▪ Mineral-insulated non-grounded multipoint cable insert with thermocouples (ProfileSens) For details, refer to the 'Ordering information' table.
	6a: Thermowells 6b: Tip closure, thermowells	The thermometer can be equipped with: ▪ thermowells for increased mechanical strength and corrosion resistance ▪ open guiding tubes for installation in an existing thermowell ▪ 316/316L ▪ 321 ▪ 347 ▪ Alloy 600 ▪ Other materials on request
	7: Eyebolt	Lifting device for easy handling during installation phase. 316

The modular multipoint thermometer is characterized by the following possible main configurations:

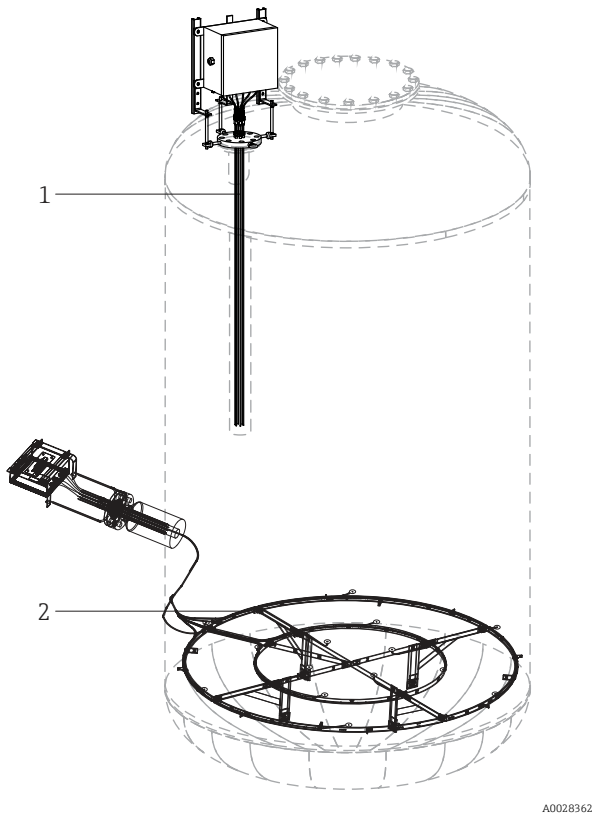

2 Main configuration possibilities

1 Linear configuration
2 3D configuration

- **Linear configuration**
  The various sensor elements are arranged in a straight line corresponding to the longitudinal axis of the multipoint thermometer (linear multipoint measurement). This configuration can be used to install the multipoint either in an existing thermowell as part of the reactor or in direct contact with the process.
- **3D distribution configuration**
  Where there are multiple measuring points, each multipoint cable sensor can be bent and arranged and secured by means of clips or equivalent accessories to produce a three-dimensional configuration. This configuration is typically used to reach multiple measurement points distributed across different cross-sections and levels. Specific support frames can be provided and installed on request if they are not already available on site.

Input

Measured variable

Temperature (temperature-linear transmission behavior)

Measuring range

RTD:

Input	Description	Measuring range limits
RTD	WW	−200 to +600 °C (−328 to +1 112 °F)
RTD	TF 6 mm	−50 to +400 °C (−58 to +752 °F)
RTD	TF 3 mm	−50 to +250 °C (−58 to +482 °F)
RTD	iTHERM StrongSens 6 mm	−50 to +500 °C (−58 to +932 °F)

Thermocouple:

Input	Description	Measuring range limits
Thermocouples (TC) as per IEC 60584, part 1 - using an Endress+Hauser - iTEMP temperature head transmitter	Type J (Fe-CuNi) Type K (NiCr-Ni) Type N (NiCrSi-NiSi)	−40 to +720 °C (−40 to +1 328 °F) −40 to +1 150 °C (−40 to +2 102 °F) −40 to +1 100 °C (−40 to +2 012 °F)
	Internal cold junction (Pt100) Accuracy of cold junction: ± 1 K Max. sensor resistance: 10 kΩ	

Output

Output signal

The measured values are transmitted in two ways:
- Directly-wired sensors - sensor measured values forwarded without a transmitter.
- Via all common protocols by selecting an appropriate Endress+Hauser iTEMP temperature transmitter. All the transmitters listed below are mounted directly in the junction box and wired with the sensory mechanism.

Family of temperature transmitters

Thermometers fitted with iTEMP transmitters are an installation-ready complete solution to improve temperature measurement by significantly increasing measurement accuracy and reliability, when compared to direct wired sensors, as well as reducing both wiring and maintenance costs.

4-20 mA head transmitter
They offer a high degree of flexibility, thereby supporting universal application with low inventory storage. The iTEMP transmitters can be configured quickly and easily at a PC. Endress+Hauser offers free configuration software which can be downloaded from the Endress+Hauser website.

HART head transmitter
The iTEMP transmitter is a 2-wire device with one or two measuring inputs and one analog output. The device not only transfers converted signals from resistance thermometers and thermocouples, it also transfers resistance and voltage signals using HART communication. Swift and easy operation, visualization and maintenance using universal configuration software like FieldCare, DeviceCare or FieldCommunicator 375/475. Integrated Bluetooth® interface for the wireless display of measured values and configuration via Endress +Hauser SmartBlue app, optional.

PROFIBUS PA head transmitter
Universally programmable iTEMP head transmitter with PROFIBUS PA communication. Conversion of various input signals into digital output signals. High measurement accuracy over the complete operating temperature range. PROFIBUS PA functions and device-specific parameters are configured via fieldbus communication.

FOUNDATION Fieldbus™ head transmitters
Universally programmable iTEMP head transmitter with FOUNDATION Fieldbus™ communication. Conversion of various input signals into digital output signals. High measurement accuracy over the complete operating temperature range. All iTEMP transmitters are approved for use in all the main process control systems. The integration tests are performed in Endress+Hauser's 'System World'.

Head transmitter with PROFINET and Ethernet-APL™
The iTEMP transmitter is a 2-wire device with two measuring inputs. The device not only transfers converted signals from resistance thermometers and thermocouples, it also transfers resistance and voltage signals using the PROFINET protocol. Power is supplied via the 2-wire Ethernet connection according to IEEE 802.3cg 10Base-T1. The iTEMP transmitter can be installed as an intrinsically safe electrical apparatus in Zone 1 hazardous areas. The device can be used for instrumentation purposes in the terminal head form B (flat face) according to DIN EN 50446.

Head transmitter with IO-Link
The iTEMP transmitter is an IO-Link device with a measurement input and an IO-Link interface. It offers a configurable, simple and cost-effective solution thanks to digital communication via IO-Link. The device is mounted in a terminal head form B (flat face) as per DIN EN 5044.

Advantages of the iTEMP transmitters:
- Dual or single sensor input (optionally for certain transmitters)
- Attachable display (optionally for certain transmitters)
- Unsurpassed reliability, accuracy and long-term stability in critical processes
- Mathematical functions
- Monitoring of the thermometer drift, sensor backup functionality, sensor diagnostic functions
- Sensor-transmitter-matching based on the Callendar van Dusen coefficients (CvD).

Power supply

- Electrical connecting cables must be smooth, corrosion resistant, easy to be cleaned and inspected, robust against mechanical stresses, no-humidity sensitivity.
- Grounding or shielding connections are possible via ground terminals on the junction box.

Wiring diagrams

RTD sensor connection type

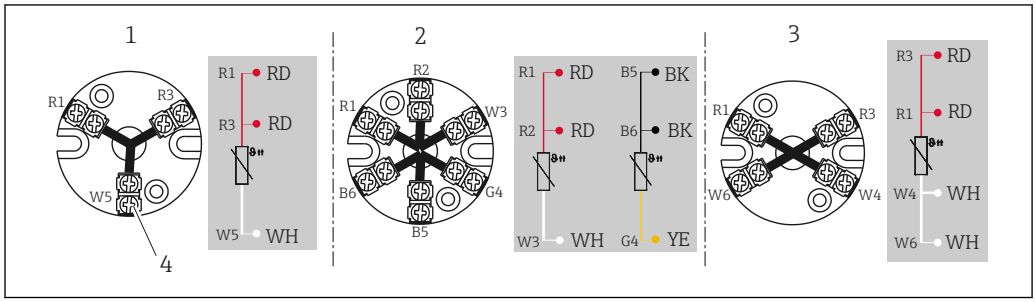

A0045453

3 *Mounted terminal block*

1 *3-wire, single*
2 *2 x 3-wire, single*
3 *4-wire, single*
4 *Outside screw*

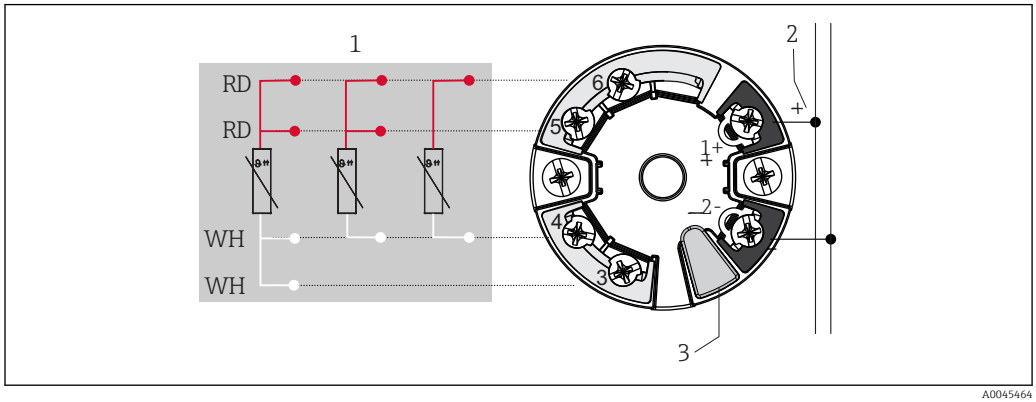

A0045464

4 *Head-mounted transmitter TMT7x or TMT31 (single input)*

1 *Sensor input, RTD and Ω: 4-, 3- and 2-wire*
2 *Power supply or fieldbus connection*
3 *Display connection/CDI interface*

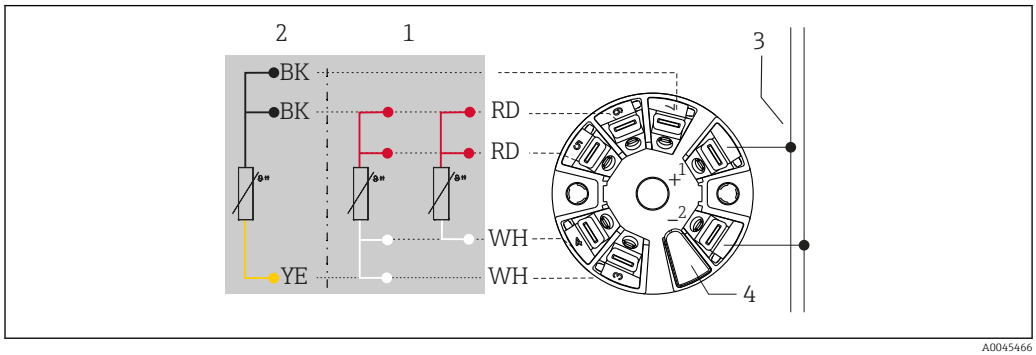

A0045466

5 *Head-mounted transmitter TMT8x (dual input)*

1 *Sensor input 1, RTD: 4- and 3-wire*
2 *Sensor input 2, RTD: 3-wire*
3 *Power supply or fieldbus connection*
4 *Display connection*

Mounted field transmitter: Fitted with screw terminals

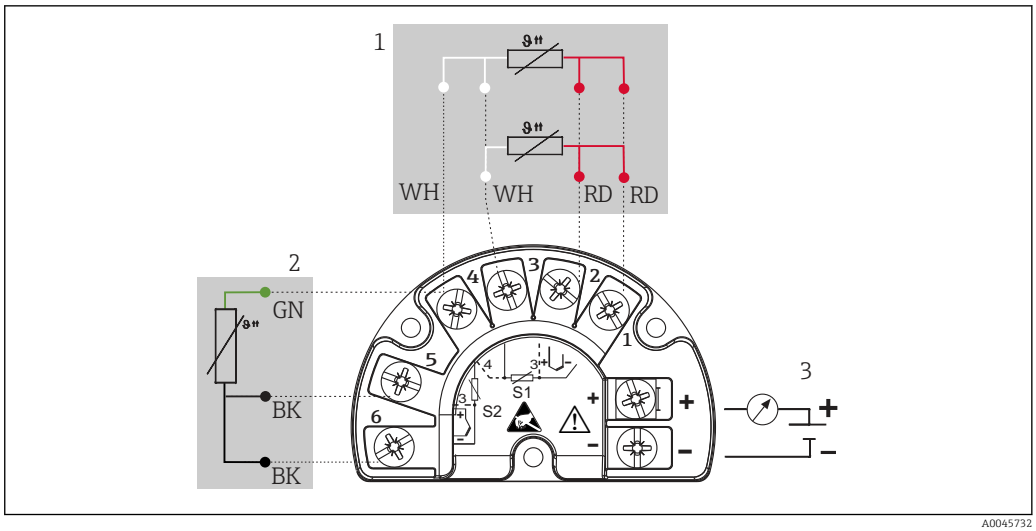

6 *TMT162 (dual input)*

1 *Sensor input 1, RTD: 3- and 4-wire*
2 *Sensor input 2, RTD: 3-wire*
3 *Power supply, field transmitter and analog output 4 to 20 mA or fieldbus connection*

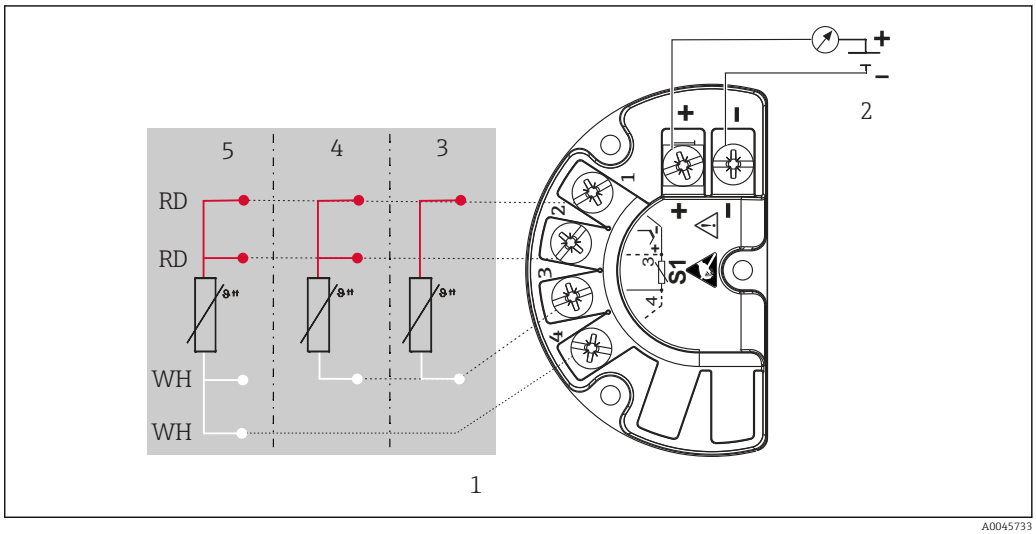

7 *TMT142B (single input)*

1 *Sensor input RTD*
2 *Power supply, field transmitter and analog output 4 to 20 mA, HART® signal*
3 *2-wire*
4 *3-wire*
5 *4-wire*

Thermocouple (TC) sensor connection type

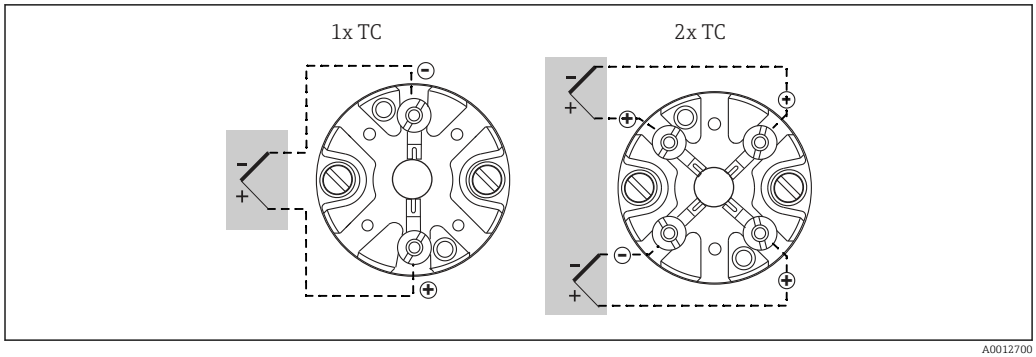

8 Mounted terminal block

Head-mounted transmitter TMT8x (dual sensor input) 1)

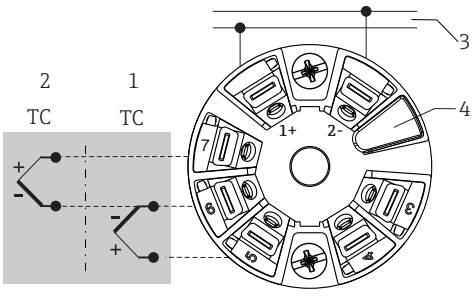

1 Sensor input 1
2 Sensor input 2
3 Fieldbus communication and power supply
4 Display connection

Head-mounted transmitter TMT7x or TMT31 (single input) 1)

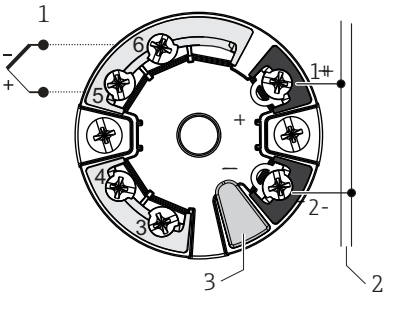

1 Sensor input TC, mV
2 Power supply, bus connection
3 Display connection/CDI interface

Mounted field transmitter TMT162 or TMT142B

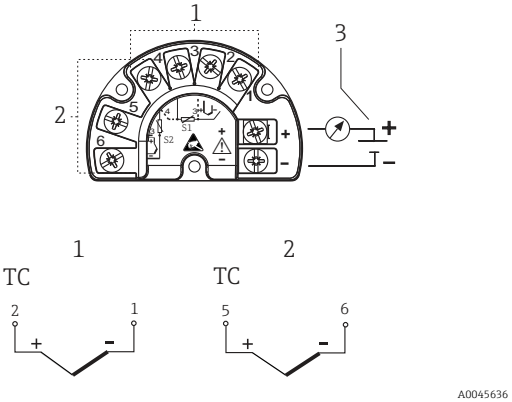

1 Sensor input 1
2 Sensor input 2 (not TMT142B)
3 Supply voltage for field transmitter and analog output 4 to 20 mA or fieldbus communication

1) Fitted with spring terminals if screw terminals are not explicitly selected or a dual sensor is installed.

Thermocouple wire colors

As per IEC 60584	As per ASTM E230
▪ Type J: black (+), white (-) ▪ Type K: green (+), white (-) ▪ Type N: pink (+), white (-) ▪ Type T: brown (+), white (-)	▪ Type J: white (+), red (-) ▪ Type K: yellow (+), red (-) ▪ Type N: orange (+), red (-) ▪ Type T: blue (+), red (-)

Performance characteristics

Reference operating conditions

This data is relevant for determining the measurement accuracy of the iTEMP transmitters used. See technical documentation of the specific iTEMP transmitter.

Maximum measurement error

RTD resistance thermometer according to IEC 60751

Class	Max. tolerances (°C)	Characteristics
RTD maximum sensor error		
Cl. A	± (0.15 + 0.002 · |t| [1])	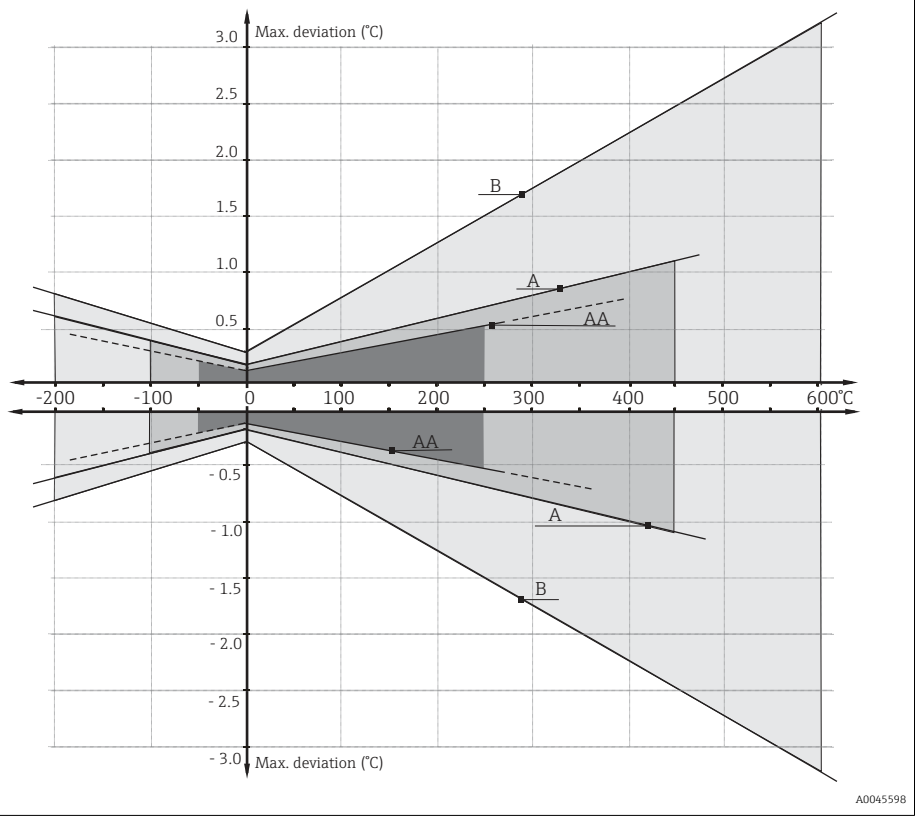
Cl. AA, previously 1/3 Cl. B	± (0.1 + 0.0017 · |t|) [1]	
Cl. B	± (0.3 + 0.005 · |t| [1])	

1) |t| = Temperature absolute value in °C

To get the maximum tolerances in °F, multiply the results in °C by a factor of 1.8.

Temperature ranges

Sensor type [1]	Operating temperature range	Class B	Class A	Class AA
Pt100 (TF) Standard	−50 to +400 °C (−58 to +752 °F)	3 mm: −50 to +250 °C (−58 to +482 °F) 6 mm: −50 to +400 °C (−58 to +752 °F)	−30 to +250 °C (−22 to +482 °F)	0 to +150 °C (+32 to +302 °F)
Pt100 (TF) iTHERM StrongSens	−50 to +500 °C (−58 to +932 °F)	−50 to +500 °C (−58 to +932 °F)	−30 to +300 °C (−22 to +572 °F)	0 to +150 °C (+32 to +302 °F)
Pt100 (WW)	−200 to +600 °C (−328 to +1 112 °F)	−200 to +600 °C (−328 to +1 112 °F)	−100 to +450 °C (−148 to +842 °F)	−50 to +250 °C (−58 to +482 °F)

1) Options depend on product and configuration

Permissible deviation limits of thermoelectric voltages from the standard characteristic for thermocouples as per IEC 60584 or ASTM E230/ANSI MC96.1:

Standard	Type	Standard tolerance		Special tolerance	
IEC 60584		Class	Deviation	Class	Deviation
	J (Fe-CuNi)	2	±2.5 °C (−40 to +333 °C) ±0.0075 |t| [1] (333 to 750 °C)	1	±1.5 °C (−40 to +375 °C) ±0.004 |t| [1] (375 to 750 °C)
	K (NiCr-NiAl) N (NiCrSi-NiSi)	2	±0.0075 |t| [1] (333 to 1 200 °C) ±2.5 °C (−40 to +333 °C) ±0.0075 |t| [1] (333 to 1 200 °C)	1	±1.5 °C (−40 to +375 °C) ±0.004 |t| [1] (375 to 1 000 °C)

1) \|t\| = absolute value in °C

Thermocouples made of base metals are generally supplied so that they comply with the manufacturing tolerances specified in the tables for temperatures > −40 °C (−40 °F). These materials are generally not suitable for temperatures < −40 °C (−40 °F). The tolerances of Class 3 cannot be met. A separate material must be selected for this temperature range. This cannot be handled via the standard product.

Standard	Type	Tolerance class: Standard	Tolerance class: Special
ASTM E230/ANSI MC96.1		Deviation; the larger value applies in each case	
	J (Fe-CuNi)	±2.2 K or ±0.0075 |t| [1] (0 to 760 °C)	±1.1 K or ±0.004 |t| [1] (0 to 760 °C)
	K (NiCr-NiAl) N (NiCrSi-NiSi)	±2.2 K or ±0.02 |t| [1] (−200 to 0 °C) ±2.2 K or ±0.0075 |t| [1] (0 to 1 260 °C)	±1.1 K or ±0.004 |t| [1] (0 to 1 260 °C)

1) \|t\| = absolute value in °C

The materials for thermocouples are generally supplied in such a way that they comply with the tolerances specified in the table for temperatures > 0 °C (32 °F). These materials are generally not suitable for temperatures < 0 °C (32 °F). The specified tolerances cannot be satisfied. A separate material must be selected for this temperature range. This cannot be handled via the standard product.

Response time

Response time for the sensor assembly without transmitter. It refers to inserts in direct contact with the process. When thermowells are used, a specific assessment should be carried out.

RTD

Calculated at an ambient temperature of approx. 23 °C by immersing the insert in running water (0.4 m/s flow rate, 10 K excess temperature):

Insert diameter	Response time	
Mineral-insulated cable, 3 mm (0.12 in)	t_{50}	2 s
	t_{90}	5 s
StrongSens RTD insert, 6 mm (¼ in)	t_{50}	< 5.5 s
	t_{90}	< 16 s
Mineral-insulated cable, 4.8 mm (0.19 in)	t_{50}	3.5 s
	t_{90}	9 s

Thermocouple (TC)

Calculated at an ambient temperature of approx. 23 °C by immersing the insert in running water (0.4 m/s flow rate, 10 K excess temperature):

Insert diameter	Response time	
Grounded thermocouple: 3 mm (0.12 in), 2 mm (0.08 in)	t_{50}	0.8 s
	t_{90}	2 s
Ungrounded thermocouple: 3 mm (0.12 in), 2 mm (0.08 in)	t_{50}	1 s
	t_{90}	2.5 s
Grounded thermocouple 6 mm (¼ in)	t_{50}	2 s
	t_{90}	5 s
Ungrounded thermocouple 6 mm (¼ in)	t_{50}	2.5 s
	t_{90}	7 s
Grounded thermocouple 8 mm (0.31 in)	t_{50}	2.5 s
	t_{90}	5.5 s
Ungrounded thermocouple 8 mm (0.31 in)	t_{50}	3 s
	t_{90}	6 s

Cable sensor diameter (ProfileSens)	Response time	
8 mm (0.31 in)	t_{50}	2.4 s
	t_{90}	6.2 s
9.5 mm (0.37 in)	t_{50}	2.8 s
	t_{90}	7.5 s
12.7 mm (½ in)	t_{50}	3.8 s
	t_{90}	10.6 s

Shock and vibration resistance

- RTD: 3G / 10 to 500 Hz according to IEC 60751
- RTD iTHERM StrongSens Pt100 (TF, vibration resistant): Up to 60G
- TC: 4G / 2 to 150 Hz according to IEC 60068-2-6

Calibration

Calibration is a service that can be performed on each individual insert, either during the multipoint production phase in the factory or after multipoint installation in the plant.

If calibration is to be performed after the multipoint is installed, please contact the Endress +Hauser service team for support. Together with the Endress+Hauser service team, any further measures can be arranged to complete the calibration of the target sensor. Under no circumstances is it permitted to unscrew any threaded component on the process connection under operating conditions (i.e. while the process is running).

Calibration involves comparing the measured values of the measuring elements of the multipoint inserts (DUT = device under test) with those of a more precise calibration standard using a defined and reproducible measurement method. The aim is to determine the deviation of the DUT measured values from the true value of the measured variable.

In the case of a multipoint cable sensor, temperature-controlled calibration baths from −80 to 550 °C (−112 to 1 022 °F) can be used for a factory calibration or an accredited calibration for the last measuring point only (if NL-L_{MPx} < 100 mm (3.94 in)). For factory calibration of the thermometers, special boreholes in the calibration furnaces are used to ensure even distribution of the temperature from 200 to 550 °C (392 to 1 022 °F) over the corresponding section.

Two different methods are used for the inserts:
- Calibration at fixed point, e.g. at the freezing point of water at 0 °C (32 °F).
- Calibration against a precise reference thermometer.

Evaluation of inserts

If a calibration with an acceptable measurement uncertainty and transferable measurement results is not possible, Endress+Hauser offers an insert evaluation measurement service, if technically feasible.

Installation

Installation location

The installation location must meet the requirements listed in this document, e.g. ambient temperature, protection class, climate class etc. Care should be taken when checking the sizes of possible existing support frames or brackets welded on the reactor's wall (usually not included in the scope of delivery) or of any other existing frame in the installation area.

Orientation

No restrictions. The multipoint thermometer can be installed either in horizontal, oblique or in vertical configuration, related to the reactor or vessel vertical axis.

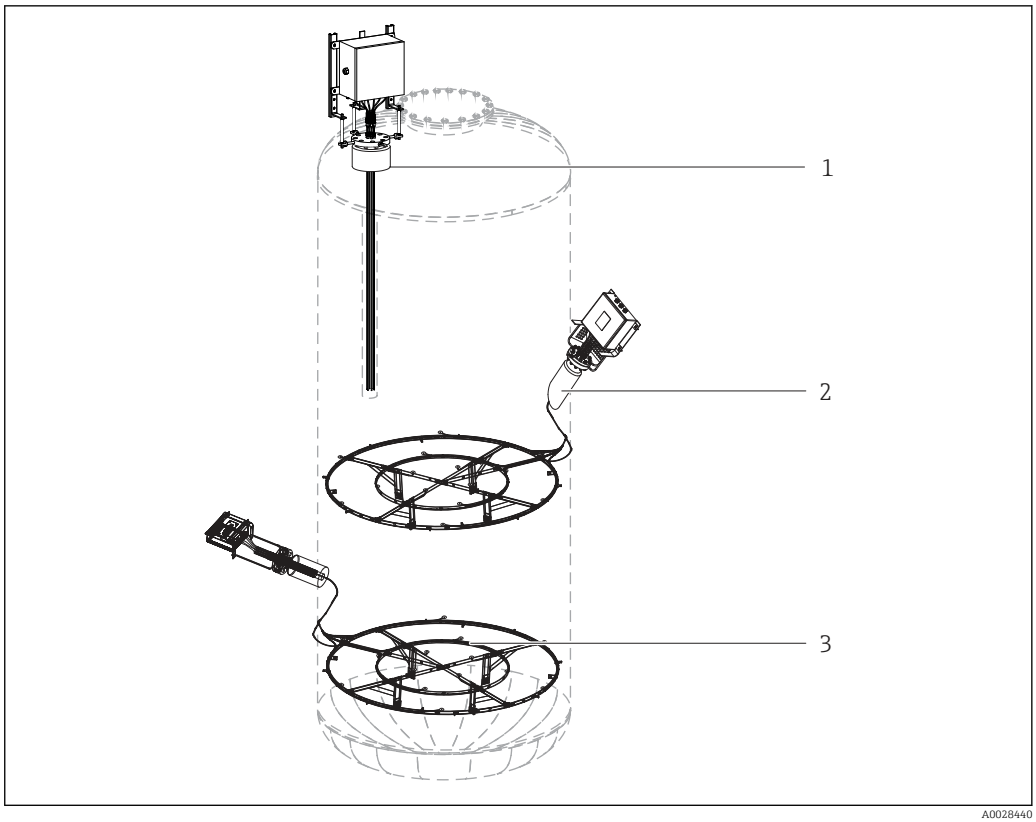

9 *Installation examples - no restrictions regarding the orientation*

1 Vertical installation with linear configuration
2 Oblique installation with 3D configuration
3 Horizontal installation with 3D configuration

Installation instructions

The modular multipoint thermometer is designed to be installed with a flanged process connection into a vessel, reactor, tank or similar environment. All parts and components have to be handled with care. Avoid the following during installation, lifting and introduction of the device through the nozzle provided:

- Misalignment with the nozzle axis.
- Any load on the welded or threaded parts caused by the weight of the device
- Deformation or crushing of the threaded components, bolts, nuts, cable glands and compression fittings.
- Bending radius of the thermowells smaller than 20 times the diameter of the thermowell.
- Friction between the temperature probes and the internals of the reactor.
- Fixing the temperature probes to the reactor's infrastructures without allowing axial displacements or movements.
- Bending radius of the sheathed cable (inserts) with a radius smaller than 5 times the outer diameter of the sheathed cable.

Vessel’s internals have to be kept into consideration for the interaction with the multipoint inserts. These internals can be considered as the interface between multipoint and the process, when they are used to fix the tips of the inserts, or constraints when the route of the thermocouples has to be performed as per installation instructions. If the internal fixtures cannot be used as an interface for the insert, the manufacturer can provide special support frames that have minimal impact on the process and allow the implementation of the desired measuring points. Frame components are always mechanically jointed to avoid any thermal interference or negative effect on the internal fixtures.

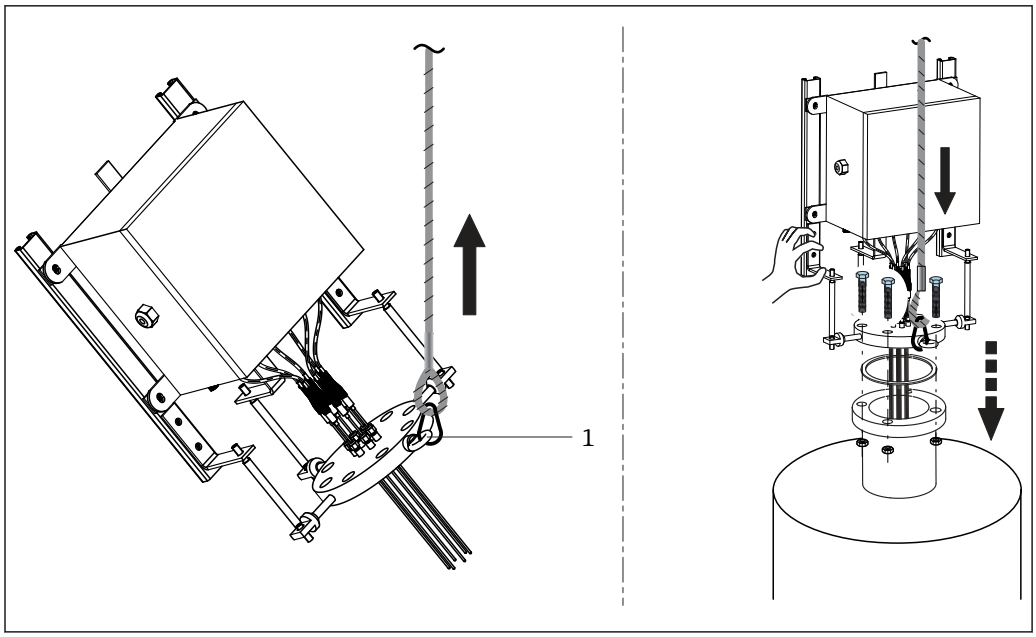

10 *Multipoint thermometer installation in a reactor nozzle via flange process connection.*

During installation the whole thermometer must only be lifted and moved by using ropes properly mounted on the eyebolt of the flange (1).

Environment

Ambient temperature range

Junction box	Non-hazardous area	Hazardous area
Without mounted transmitter	−40 to +85 °C (−40 to +185 °F)	−40 to +60 °C (−40 to +140 °F)
With mounted head transmitter	−40 to +85 °C (−40 to +185 °F)	Depends on the relevant hazardous area approval. Details see Ex documentation.

Storage temperature

Junction box	
With head transmitter	−40 to +95 °C (−40 to +203 °F)

Relative humidity

Condensation according to IEC 60068-2-14:
Head transmitter: Permitted

Maximum relative humidity: 95% according to IEC 60068-2-30

Climate class

Determined when the following components are installed into the junction box:
- Head transmitter: Class C1 according to EN 60654-1
- Terminal blocks: Class B2 according to EN 60654-1

Degree of protection

- Specification for conduit: IP68
- Specification for the junction box: IP66/67

Vibration-resistance and shock-resistance

- RTD: 3g / 10 to 500 Hz according to IEC 60751
- RTD iTHERM StrongSens Pt100 (TF, vibration resistant): Up to 60g
- TC: 4g / 2 to 150 Hz according to IEC 60068-2-6

Electromagnetic compatibility (EMC)

Depends on the transmitter used. For detailed information see the related Technical Information.

Process

The process temperature and process pressure are the minimum input parameters for the selection of the right product configuration. If special product features are requested, additional data such as process fluid type, phases, concentration, viscosity, stream and turbulences, corrosion rate have to be considered as mandatory for the whole product definition.

Process temperature range

Up to +1 150 °C (+2 102 °F). Depends on the configuration.

The flanges for the process connection define the maximum process conditions under which the devices can work based on their specific pressure classes, which are designed according to the requirements of the plant.

Process pressure range

0 to 100 bar (0 to 1 450 psi)

Anyhow, the maximum required process pressure has to be combined according to the maximum allowable process temperature. Process connections like compression fittings, flanges with their specific ratings, thermowells, selected according to the plant requirements, define the maximum process conditions at which the device has to operate. Endress+Hauser experts can support the customer on any related questions.

Process applications:
- Olefins
- Ethylene
- Propylene
- Aromatics
- Benzene
- N-based inorganics
- Ammonia
- Urea
- NGTL production
- Distillation units and hydrogenation

Mechanical construction

Design, dimensions

The multipoint thermometer is composed of different sub-assemblies. Both linear and 3D configurations have the same features, dimensions and materials. Different inserts are available, based upon specific process conditions, in order to have the highest accuracy and an extended lifetime. In addition, thermowells can be selected to further increase mechanical performance and corrosion resistance, and to allow insert replacement. Associated shielded extension cables are provided with high resistance sheath materials to withstand different environmental conditions and to ensure steady and noiseless signals. The transition between the inserts and the extension cable is obtained by the usage of specially sealed bushings, ensuring the declared IP degree protection.

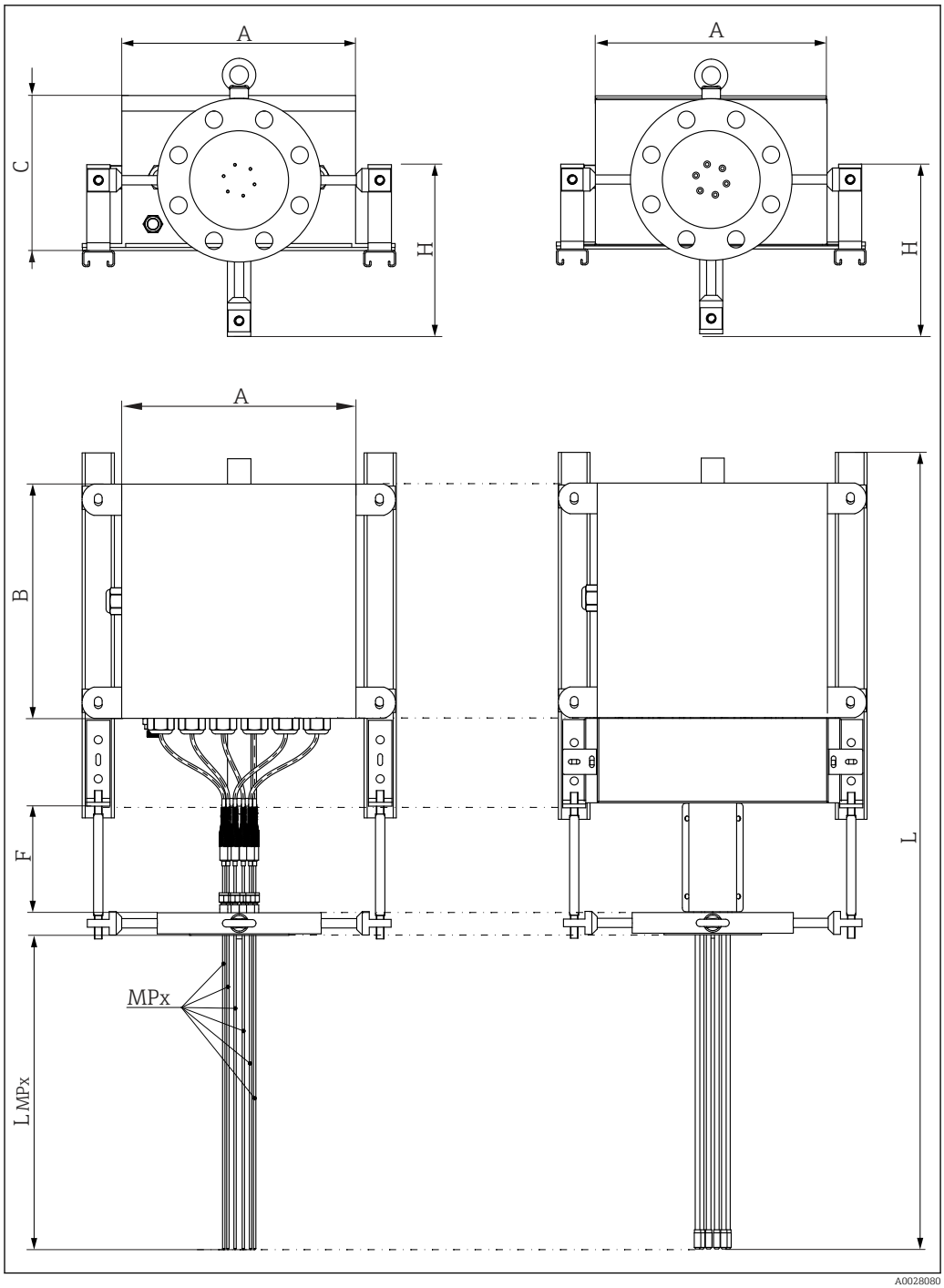

11 Design of the modular multipoint thermometer, with frame neck on the left side or with frame neck and covers on the right side. All dimensions in mm (in)

A, B, Dimensions of the junction box, see following figure
C
MPx Number and distribution of measuring points: MP1, MP2, MP3 etc.
L_{MPx} Different immersion length of sensor elements or thermowells
H Dimensions of the frame of the junction box and support system
F Neck extension length
L Overall device length

Neck extension F in mm (in)
Standard 250 (9.84) Specifically customized neck extensions are available on request.

Immersion lengths MPx of sensor elements/thermowells:
Based on customer requirements

Junction box

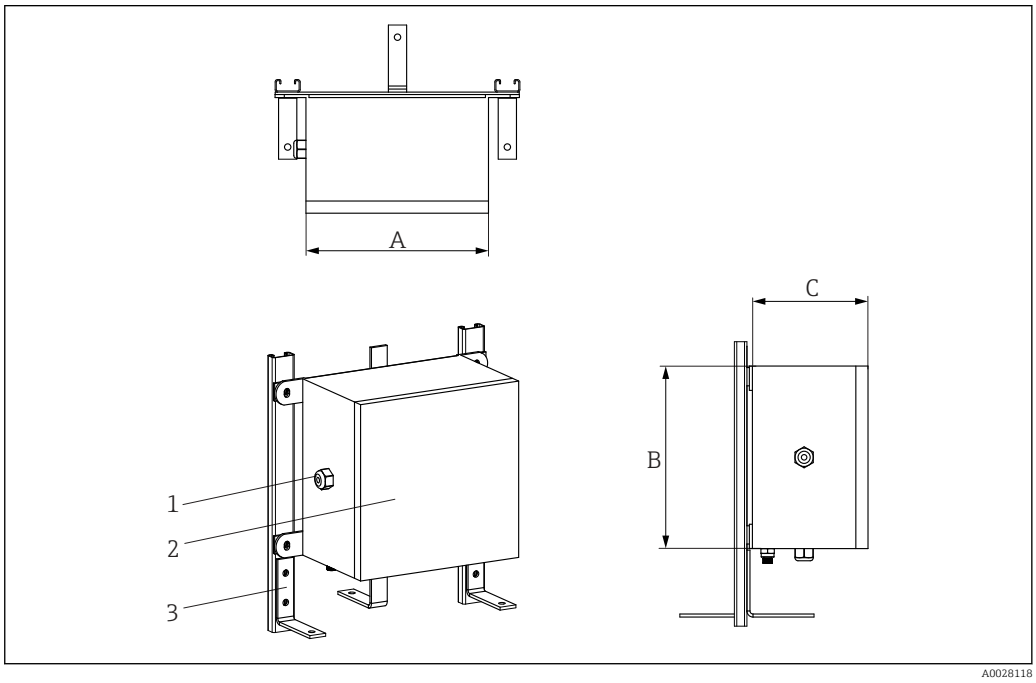

1 Cable gland
2 Junction box
3 Frame

The junction box is suited to environments where chemical agents are used. Sea water corrosion resistance and extreme temperature variation stability is guaranteed. Ex e-/Ex i connections can be installed.

The multipoint thermometer can be fitted with ground terminals and shielding connections. Please observe the system guidelines for correct connection of the cables.

Possible junction box dimensions (A x B x C) in mm (in):

		A	B	C
Stainless steel	Min.	170 (6.7)	170 (6.7)	130 (5.1)
	Max.	500 (19.7)	500 (19.7)	240 (9.5)
Aluminum	Min.	100 (3.9)	150 (5.9)	80 (3.2)
	Max.	330 (13)	500 (19.7)	180 (7.1)

Type of specification	Junction box	Cable glands
Material	AISI 316	NiCr-coated brass AISI 316/316L
Degree of protection (IP)	IP66/67	IP66
Ambient temperature range (ATEX)	−55 to +110 °C (−67 to +230 °F)	
Approvals	ATEX, IECEx, UL, CSA, EAC approval for use in hazardous areas	

Type of specification	Junction box	Cable glands
Identification	▪ ATEX II 2GD Ex e IIC T6/T5/T4 Gb Ex ia IIC T6/T5/T4 Ga Ex tb IIIC T85°C/T100°C/ T135°C Db IP66 ▪ IECEx Ex e IIC T6/T5/T4 Gb/ Ex ia IIC T6/T5/T4 Ga Ex tb IIIC T85°C/T100°C/ T135°C Db IP66 ▪ UL913 Class I, Zone 1, AEx e IIC; Zone 21, AEx tb IIIC IP66 ▪ CSA C22.2 No.157 Class I, Zone 1 Ex e IIC; Class II, Groups E, F and G	According to the junction box approval
Cover	Hinged	-
Maximum sealing diameter	-	6 to 12 mm (0.24 to 0.47 in)

Neck extension

The neck extension ensures the connection between the flange and the junction box. The design was developed to facilitate different installation options and to address potential obstacles and restrictions that are present in all plants. This includes the infrastructure of the reactor, for example, (platforms, load-bearing structures, support rails, stairs, etc.) and the thermal insulation of the reactor. The neck extension design ensures easy access for monitoring and maintaining inserts and extension cables. It provides a very firm (rigid) connection for the junction box and vibration loads. No closed volumes are present in the neck extension. This helps prevent the accumulation of residues and potentially hazardous fluids from the surroundings that could damage the device, while also ensuring continuous ventilation.

Insert and thermowells

Different insert and thermowell types are available. For other requirements not listed here, please contact the manufacturer's sales department.

In the case of a multipoint cable insert (ProfileSens), see Technical Information TI01346T

Thermocouple

Diameter in mm (in)	Type	Standard	Measuring point type	Sheath material
6 (0.24) 3 (0.12) 2 (0.08) 1.5 (0.06)	1x type K 2x type K 1x type J 2x type J 1x type N 2x type N 1x type T 2x type T	IEC 60584/ ASTM E230	Grounded/Ungrounded	Alloy 600/AISI 316L/Pyrosil

RTD

Diameter in mm (in)	Type	Standard	Sheath material
3 (0.12) 6 (¼)	1x Pt100 WW 2x Pt100 WW 1x Pt100 TF 2x Pt100 TF	IEC 60751	AISI 316L

Thermowells

External diameter in mm (in)	Sheath material	Type	Thickness in mm (in)
6 (0.24)	AISI 316/316L AISI 316Ti AISI 321 AISI 347 Alloy 600	closed or open	1 (0.04) or 1.5 (0.06)
8 (0.32)	AISI 316/316L AISI 316Ti AISI 321 AISI 347 Alloy 600	closed or open	1 (0.04) or 1.5 (0.06) or 2 (0.08)
10.2 (⅛)	AISI 316/316L AISI 316Ti AISI 321 AISI 347 Alloy 600	closed or open	1.73 (0.068)

Weight

The weight can vary depending on the configuration: Dimension and content of the junction box, neck extension length, dimensions of process connection and the number of inserts. The approximate weight of a typically configured multipoint thermometer (number of inserts = 12, flange size = 3", medium size junction box) = 40 kg (88 lb)

Materials

It refers to insert sheath, neck extension, junction box and all wetted parts.

The temperatures for continuous operation specified in the following table are only intended as reference values for use of the various materials in air and without any significant compressive load. The maximum operation temperatures are reduced considerably in some cases where abnormal conditions such as high mechanical load occur or in aggressive media.

Material name	Short form	Recommended max. temperature for continuous use in air	Properties
AISI 316/1.4401	X5CrNiMo 17-12-2	650 °C (1 202 °F)	▪ Austenitic, stainless steel ▪ High corrosion resistance in general ▪ Particularly high corrosion resistance in chlorine-based and acidic, non-oxidizing atmospheres through the addition of molybdenum (e.g. phosphoric and sulfuric acids, acetic and tartaric acids with a low concentration)
AISI 316L/ 1.4404 1.4435	X2CrNiMo17-12-2 X2CrNiMo18-14-3	650 °C (1 202 °F)	▪ Austenitic, stainless steel ▪ High corrosion resistance in general ▪ Particularly high corrosion resistance in chlorine-based and acidic, non-oxidizing atmospheres through the addition of molybdenum (e.g. phosphoric and sulfuric acids, acetic and tartaric acids with a low concentration) ▪ Increased resistance to intergranular corrosion and pitting ▪ Compared to 1.4404, 1.4435 has even higher corrosion resistance and a lower delta ferrite content
Alloy 600/2.4816	NiCr15Fe	1 100 °C (2 012 °F)	▪ A nickel/chromium alloy with very good resistance to aggressive, oxidizing and reducing atmospheres, even at high temperatures ▪ Resistance to corrosion caused by chlorine gases and chlorinated media as well as many oxidizing mineral and organic acids, sea water etc. ▪ Corrosion from ultrapure water ▪ Not to be used in sulfur-containing atmospheres

Material name	Short form	Recommended max. temperature for continuous use in air	Properties
AISI 304/1.4301	X5CrNi18-10	850 °C (1562 °F)	▪ Austenitic, stainless steel ▪ Suitable for use in water and wastewater with low contamination ▪ Resistant to organic acids, saline solutions, sulphates, alkaline solutions, etc. at relatively low temperatures only
AISI 304L/ 1.4307	X2CrNi18-9	850 °C (1562 °F)	▪ Good welding properties ▪ Impervious to intergranular corrosion ▪ High ductility, excellent drawing, forming, and spinning properties
AISI 316Ti/ 1.4571	X6CrNiMoTi17-12-2	700 °C (1292 °F)	▪ Addition of titanium means increased resistance to intergranular corrosion even after welding ▪ Broad range of uses in the chemical, petrochemical and oil industries as well as in coal chemistry ▪ Can only be polished to a limited extent, titanium streaks can form
AISI 321/1.4541	X6CrNiTi18-10	815 °C (1499 °F)	▪ Austenitic, stainless steel ▪ High resistance to intergranular corrosion even after welding ▪ Good welding characteristics, suitable for all standard welding methods ▪ It is used in many sectors of the chemical industry, petrochemical, and pressurized vessels
AISI 347/1.4550	X6CrNiNb10-10	800 °C (1472 °F)	▪ Austenitic, stainless steel ▪ High resistance in a wide variety of environments in the chemical, textile, oil refining, dairy and food industries ▪ Added niobium makes this steel impervious to intergranular corrosion ▪ Good weldability ▪ Main applications are furnace fire walls, pressure vessels, welded structures, turbine blades

Process connection

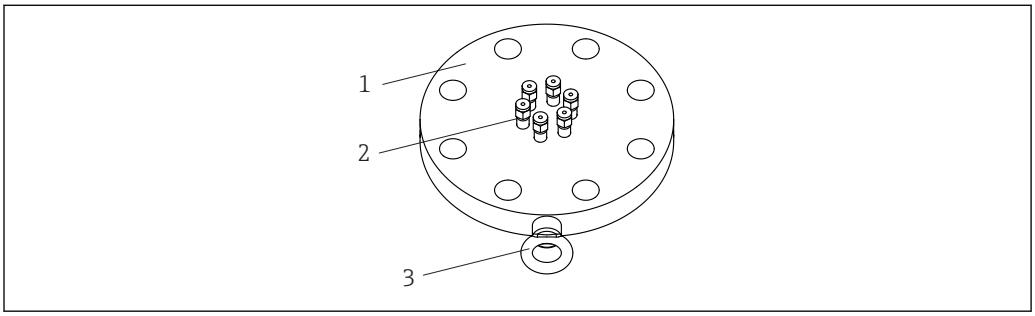

12 Flange as process connection

1 Flange
2 Compression fittings
3 Eyebolt

Standard process connection flanges are designed according to the following standards:

Standard [1]	Size	Design	Material
ASME	1½", 2", 3", 4", 6", 8"	150#, 300#, 400#, 600#	AISI 316, 316L, 304, 304L, 316Ti, 321, 347
EN	DN40, DN50, DN80, DN100, DN150, DN200	PN10, PN16, PN25, PN40, PN63, PN100	

1) Flanges according to GOST standard are available on request.

Compression fittings

The compression fittings are welded or threaded into the flange to ensure tightness to the process connection. Dimensions correspond to the insert dimensions. Compression fittings comply with the highest standards of reliability in terms of materials and performances required.

Material	AISI 316/316H

User operation

For operating details, refer to the technical documentation of the relevant transmitters or the corresponding operating software.

Certificates and approvals

Current certificates and approvals for the product are available at www.endress.com on the relevant product page:

1. Select the product using the filters and search field.
2. Open the product page.
3. Select **Downloads**.

Ordering information

Detailed ordering information is available from your nearest sales organization www.addresses.endress.com or in the Product Configurator at www.endress.com:

1. Select the product using the filters and search field.
2. Open the product page.
3. Select **Configuration**.

Product Configurator - the tool for individual product configuration
- Up-to-the-minute configuration data
- Depending on the device: direct input of information specific to the measuring point, such as the measuring range or operating language
- Automatic verification of exclusion criteria
- Automatic creation of the order code and its breakdown in PDF or Excel output format
- Ability to order directly in the Endress+Hauser Online Shop

Accessories

The accessories currently available for the product can be selected at www.endress.com:

1. Select the product using the filters and search field.
2. Open the product page.
3. Select **Spare parts & Accessories**.

Device-specific accessories

Accessories	Description
Tip end 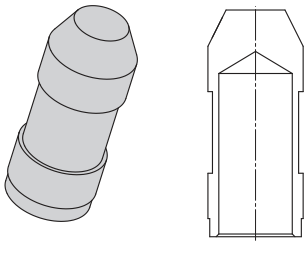 A0028427	Terminal closure welded at the tip end of the probe in order to protect the insert (or the thermowell) from aggressive process conditions and to facilitate its fixing by means of metallic tie wraps.
Thermal contact system	
Insert and centering stars 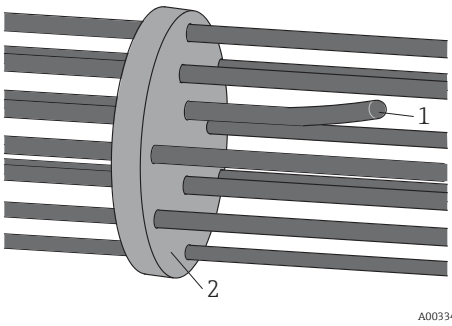 A0033485 *1 Insert* *2 Centering star*	▪ Used on straight configurations and in case of an existing thermowell for axial centering of the insert bundle ▪ Prevents the inserts from twisting ▪ Give flexural stiffness to the sensor bundle
Guiding tubes and centering stars 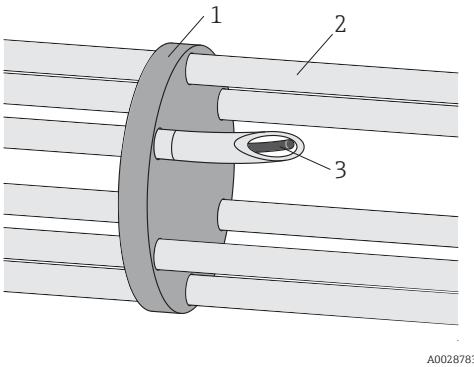 A0028783 *1 Centering star* *2 Guiding tube* *3 Insert*	▪ Used on straight configurations and in case of an existing thermowell for axial centering of the insert bundle ▪ Give flexural stiffness to the sensor bundle ▪ The inserts are replaceable. ▪ Ensures thermal contact between the sensor tip and the thermowell ▪ Modular design [1)]

Accessories	Description
Thermowells and centering stars 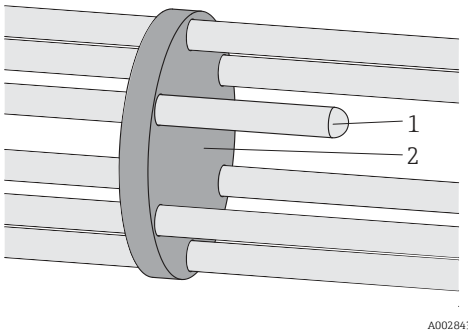 *1 Thermowell* *2 Centering star*	Used on straight configurations and existing thermowells Prevents the sensor cables from twisting Give flexural stiffness to the sensor bundle Allows sensor replacement
Bimetallic strips 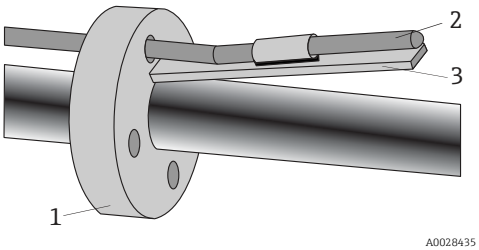 13 *Bimetallic strips with or without guiding tubes* *1 Centering star* *2 Guiding tube* *3 Bimetallic strips*	▪ Used on straight configurations and inside existing thermowells ▪ Ensures thermal contact between the sensor tip and the thermowell by means of bimetallic strips activated by temperature difference ▪ No friction during installation, even with sensors already installed

1) Can be mounted in-house or on-site

Service-specific accessories

Netilion

With the Netilion IIoT ecosystem, Endress+Hauser enables the optimization of plant performance, digitization of workflows, sharing of knowledge and improved collaboration. Drawing upon decades of experience in process automation, Endress+Hauser offers the process industry an IIoT ecosystem designed to effortlessly extract insights from data. These insights allow process optimization, leading to increased plant availability, efficiency, reliability and ultimately a more profitable plant.

www.netilion.endress.com

Applicator

Software for selecting and sizing Endress+Hauser measuring devices:
- Calculation of all the necessary data for identifying the optimum measuring device: e.g. pressure loss, accuracy or process connections.
- Graphic illustration of the calculation results

Administration, documentation and access to all project-related data and parameters over the entire life cycle of a project.

Applicator is available:
https://portal.endress.com/webapp/applicator

Configurator

Product Configurator - the tool for individual product configuration
- Up-to-the-minute configuration data
- Depending on the device: direct input of information specific to the measuring point, such as the measuring range or operating language
- Automatic verification of exclusion criteria
- Automatic creation of the order code and its breakdown in PDF or Excel output format
- Ability to order directly in the Endress+Hauser Online Shop

The Configurator is available at www.endress.com on the relevant product page:

1. Select the product using the filters and search field.
2. Open the product page.
3. Select **Configuration**.

FieldCare SFE500	FDT-based plant asset management tool from Endress+Hauser. It can configure all smart field units in your system and helps you manage them. By using the status information, it is also a simple but effective way of checking their status and condition. For details, see Operating Instructions BA00027S and BA00065S

DeviceCare SFE100	Configuration tool for devices via fieldbus protocols and Endress+Hauser service protocols. DeviceCare is the tool developed by Endress+Hauser for the configuration of Endress+Hauser devices. All smart devices in a plant can be configured via a point-to-point or point-to-bus connection. The user-friendly menus enable transparent and intuitive access to the field devices. For details, see Operating Instructions BA00027S

Documentation

The following document types are available in the Downloads area of the Endress+Hauser website (www.endress.com/downloads), depending on the device version:

Document type	Purpose and content of the document
Technical Information (TI)	**Planning aid for your device** The document contains all the technical data on the device and provides an overview of the accessories and other products that can be ordered for the device.
Brief Operating Instructions (KA)	**Guide that takes you quickly to the 1st measured value** The Brief Operating Instructions contain all the essential information from incoming acceptance to initial commissioning.
Operating Instructions (BA)	**Your reference document** The Operating Instructions contain all the information that is required in various phases of the life cycle of the device: from product identification, incoming acceptance and storage, to mounting, connection, operation and commissioning through to troubleshooting, maintenance and disposal.
Description of Device Parameters (GP)	**Reference for your parameters** The document provides a detailed explanation of each individual parameter. The description is aimed at those who work with the device over the entire life cycle and perform specific configurations.
Safety instructions (XA)	Depending on the approval, safety instructions for electrical equipment in hazardous areas are also supplied with the device. These are an integral part of the Operating Instructions. The nameplate indicates which Safety Instructions (XA) apply to the device.
Supplementary device-dependent documentation (SD/FY)	Always comply strictly with the instructions in the relevant supplementary documentation. The supplementary documentation is a constituent part of the device documentation.



www.addresses.endress.com

Endress+Hauser

People for Process Automation